ABB DRIVES FOR HVAC

ACH580-34 drive modules

Hardware manual



ACH580-34 drive modules

Hardware manual

Table of contents 

1. Safety instructions 

6. Mechanical installation 

8. Electrical installation 

13. Start-up 

3AXD50000419708 Rev D
EN
Original instructions
EFFECTIVE: 2023-03-28

Table of contents

1 Safety instructions

Contents of this chapter 17
Use of warnings and notes 17
General safety in installation, start-up and maintenance 18
Electrical safety in installation, start-up and maintenance 21
Electrical safety precautions 21
Additional instructions and notes 22
Printed circuit boards 22
Grounding 23
General safety in operation 24
Additional instructions for permanent magnet motor drives 24
Safety in installation, start-up, maintenance 24
Safety in operation 25

2 Introduction to the manual

Contents of this chapter 27
Applicability 27
Target audience 27
Categorization by frame size and option code 27
Quick installation, commissioning and operating flowchart 28
Terms and abbreviations 29
Related documents 29

3 Operation principle and hardware description

Contents of this chapter 31
Operation principle 31
Block diagram of the main circuit of the drive module 32
Line-side converter 32
AC voltage and current waveforms 33
Charging 33
Motor-side converter 33
DC voltage boost function 33
Benefits of the DC voltage boost 34
Impact of DC voltage boost on input current 34
Active braking function (option +N8056) 34
DC connection 34
Layout 35
Standard drive module configuration 35
Drive with clear plastic shrouds (option +B051) 36
Drive module 37
LCL filter module 38
Control panel 39
Overview of power and control connections 40
Type designation label 41

Type designation key 41
Basic code 41
Option codes 42

4 Generic cabinet planning instructions

Contents of this chapter 45
Limitation of liability 45
North America 45
Cabinet construction 45
Planning the layout of the cabinet 46
Grounding of mounting structures 46
Busbar material and joints 46
Shrouds 46
Tightening torques 46
Electrical connections 46
Mechanical connections 47
Insulation supports 47
Cable lugs 47
Cooling and degrees of protection 47
Planning the cooling 47
Air-cooled drive systems 47
Air inlets and outlets 47
Preventing the recirculation of hot air 49
EMC requirements 49
Attaching the cabinet 51
Cabinet placement on a cable duct 51
Cabinet heating elements 51
Attaching the control panel on the cabinet door 52

5 Guidelines for planning the mechanical installation

Contents of this chapter 53
Installation positions of the drive module 53
Layout example, door closed 54
Layout example, door open (standard drive module configuration) 55
Layout example, door open (option +B051) 56
Cooling solutions 57
Preventing the recirculation of hot air 57
Bookshelf mounting (standard drive module configuration) 58
Bookshelf mounting (option +B051) 60
Required free space 60
Free space at the top of the drive module 61
Free space around the drive module 61
ABB air inlet and outlet kits 61

6 Mechanical installation

Contents of this chapter 63
Examining the installation site 63
Moving and unpacking 63
Package drawings 64
Drive module package 64
Boxes 65

LCL filter module package 68
Examining the delivery 68
Lifting 68
Attaching the drive module and LCL filter module to a mounting plate or wall 69
Attaching the drive module to the LCL filter module 69
Attaching the drive module and the LCL filter module to the enclosure base 69
Grounding the drive module and the LCL filter module 70
Installing the drive in Rittal VX25 enclosure 70
Optional input power cable connection terminals and ground busbar assembly (+H370) 71

7 Guidelines for planning the electrical installation

Contents of this chapter 73
North America 73
Selecting the main supply disconnecting device 73
Selecting the main contactor 74
Examining the compatibility of the motor and drive 74
Protecting the motor insulation and bearings 74
Requirements tables 75
Requirements for ABB motors, P_n < 100 kW (134 hp) 75
Requirements for ABB motors, $P_n \geq$ 100 kW (134 hp) 76
Requirements for non-ABB motors, P_n < 100 kW (134 hp) 77
Requirements for non-ABB motors, $P_n \geq$ 100 kW (134 hp) 78
Abbreviations 78
Availability of d*u*/d*t* filter and common mode filter by drive type 79
Additional requirements for explosion-safe (EX) motors 79
Additional requirements for ABB motors of types other than M2_, M3_, M4_, HX_ and AM_ 79
Additional requirements for the regenerative and low harmonics drives 79
Additional requirements for ABB high-output and IP23 motors 79
Additional requirements for non-ABB high-output and IP23 motors 79
Additional data for calculating the rise time and the peak line-to-line voltage . 80
Additional note for sine filters 81
Selecting the power cables 81
General guidelines 81
Typical power cable sizes 82
Power cable types 82
Preferred power cable types 82
Alternate power cable types 82
Not allowed power cable types 83
Additional guidelines – North America 84
Metal conduit 84
Power cable shield 84
Grounding requirements 85
Additional grounding requirements – IEC 86
Additional grounding requirements – UL (NEC) 86
Selecting the control cables 86
Shielding 86
Signals in separate cables 87
Signals that can be run in the same cable 87
Relay cable 87
Control panel to drive cable 87

PC tool cable 87
Routing the cables 87
General guidelines – IEC 87
General guidelines – North America 88
Continuous motor cable shield/conduit or enclosure for equipment on the motor cable 89
Separate control cable ducts 89
Implementing motor and motor cable short-circuit and thermal overload protection 90
Protecting the motor and motor cable in short-circuits 90
Protecting the motor cables against thermal overload 90
Protecting the motor against thermal overload 90
Protecting the motor against overload without thermal model or temperature sensors 91
Protecting the drive and the input power cable in short-circuits 91
Protecting the drive against thermal overload 91
Protecting the input power cable against thermal overload 92
Using a safety switch between the drive and the motor 92
Implementing an ATEX-certified motor thermal protection 92
Controlling a contactor between drive and motor 92
Implementing a bypass connection 93
Example bypass connection 93
Switching the motor power supply from drive to direct-on-line 94
Switching the motor power supply from direct-on-line to drive 94
Protecting the contacts of relay outputs 94
Implementing a motor temperature sensor connection 95
Connecting a motor temperature sensor to the drive through an option module 96

9 Electrical installation

Contents of this chapter 97
Safety 97
Grounding the motor cable shield at the motor end 97
Measuring the insulation 98
Measuring the insulation resistance of the drive 98
Measuring the insulation resistance of the input power cable 98
Measuring the insulation resistance of the motor and motor cable 98
Measuring the insulation of brake resistor and resistor cable 98
Grounding system compatibility check 99
Corner-grounded and midpoint-grounded delta systems 99
Identifying the grounding system of the electrical power network 99
When to disconnect EMC filter and ground-to-phase varistor: TN-S, IT, corner-grounded delta, and midpoint-grounded delta systems 100
Guidelines for installing the drive to a TT system 100
Disconnecting instructions 101
Connecting the power cables 101
Power cable connection diagram 102
Preparing the cable ends and making 360° grounding at the cable entry 103
Power cable connection procedure 104
Connecting the control cables to the integrated control unit 105
Connecting external power supply wires to the control units 107
Connecting a control panel 107

Connecting a remote panel, or chaining one panel to several drives 108
Connecting a PC 108
Installing option modules 109
Option slot 2 (I/O extension modules) 110
Option slot 1 (fieldbus adapter modules) 111
Wiring the optional modules 111

10 Control unit

Contents of this chapter 113
Layout 114
Default I/O connection diagram 115
Additional information on the control connections 117
Embedded EIA-485 fieldbus connection 117
Connecting motor temperature sensors to the drive 118
PNP configuration for digital inputs (X2 & X3) 118
NPN configuration for digital inputs (X2 & X3) 118
Connection for obtaining 0...10 V from analog output 2 (AO2) 119
Connection examples of two-wire and three-wire sensors to analog input (AI2) . 119
DI5 as frequency input 119
Safe torque off (X4) 119
Technical data 120

11 External control unit (option +P906)

Contents of this chapter 125
Product overview 125
Layout 126
Cables 126
Unpacking the delivery 127
Installing the control unit 127
Installation procedure 128
Connecting the control unit to the drive module 132
Dimension drawing 134

12 Installation into a Rittal VX25 enclosure

Contents of this chapter 135
Limitation of liability 135
North America 135
Installation into a Rittal VX25 enclosure with ready-made ABB installation kits 135
Safety 136
Necessary parts 136
Necessary tools 136
Overall flowchart of the installation process 137
Installing the drive module and LCL filter module into an enclosure 137
Connecting the motor cables and installing the shrouds (option +B051) 138
Connecting the input cables and installing the shrouds (option +B051) 139
Installing the air baffles 141
Installing the roof and door (Rittal parts) 141
Removing the protective covering from the drive module and LCL filter module air outlet 142

13 Installation checklist

Contents of this chapter 143
Checklist 143

14 Start-up

Contents of this chapter 145
Reforming the capacitors 145
Start-up procedure 145

15 Fault tracing

Contents of this chapter 147
LEDs 147
Drive LEDs 147
Control panel LEDs 148
Warning and fault messages 148

16 Maintenance

Contents of this chapter 149
Maintenance intervals 149
Descriptions of symbols 149
Recommended annual maintenance actions by the user 150
Recommended maintenance intervals after start-up 150
Recommended functional safety actions 150
Cleaning the interior of the cabinet 151
Cleaning the interior of the heatsink 152
Cleaning the interior of the LCL filter 153
Fans 153
Replacing the auxiliary cooling fans of the drive module 154
Replacing the drive module main cooling fans 156
Replacing the LCL filter module cooling fan 157
Replacing the standard drive module 158
Replacing the LCL filter module 160
Capacitors 160
Reforming the capacitors 161
Control panel 161
Replacing the ZCU-12 control unit battery 162
Replacing the memory unit of the line-side converter control unit (ZCU-12) 162
Functional safety components 162

17 Ordering information

Contents of this chapter 163
Control panel options 163
Brake choppers and resistors 164
Output (d*u*/d*t*) filters 164
Cabinet ventilation 164
Air inlet kits 164
Air outlet kits 166
Cooling fans 167
Control panel mounting platforms 168
Retrofit accessory kits 168

18 Technical data

Contents of this chapter 169
Electrical ratings 169
IEC ratings 169
UL (NEC) ratings 170
Definitions 170
Sizing 171
Deratings 171
When is derating necessary 171
Surrounding air temperature derating 171
Altitude derating 172
Switching frequency derating 173
Output voltage boost derating 174
Fuses (IEC) 176
Calculating the short-circuit current of the installation 176
Fuses (UL) 178
Dimensions, weights and free space requirements 179
Package 179
Drive package 179
LCL filter module package 179
Losses, cooling data and noise 180
Terminal and entry data for the power cables 180
Typical power cables 181
Terminal data for the control cables 181
Electrical power network specification 182
Motor connection data 183
Control panel type 183
Efficiency 183
Energy efficiency data (ecodesign) 183
Protection classes for module 183
Ambient conditions 184
Ambient conditions 184
Storage conditions 184
Colors 185
Materials 185
Drive 185
Package materials for module products 185
Package materials for options, accessories and spare parts 185
Materials of manuals 185
Disposal 185
Applicable standards 186
Markings 186
EMC compliance (IEC/EN 61800-3:2004) 187
Definitions 187
Category C3 188
Category C4 188
UL checklist 189
Design lifetime expectancy 190
Declarations of conformity 190
Disclaimer 190
Generic disclaimer 190
Cybersecurity disclaimer 190

21 Dimension drawings

Contents of this chapter 193
Standard configuration (+E208 and +E210 included) 194
Drive module with options +B051 and +H370 195
Drive module without options +B051 and +H370 196
LCL filter module 197
Bottom plate 198
Air baffles 199
Material of the air baffles 199

22 Example circuit diagrams

Contents of this chapter 201
Example circuit diagram 201

23 The Safe torque off function

Contents of this chapter 203
Description 203
Compliance with the European Machinery Directive and the UK Supply of Machinery (Safety) Regulations 204
Wiring 205
Connection principle 205
Single ACH580-34 drive, internal power supply 205
Single ACH580-34 drive, external power supply 205
Wiring examples 206
Single ACH580-34 drive, internal power supply 206
Single ACH580-34 drive, external power supply 206
Multiple ACH580-34 drives, internal power supply 207
Multiple ACH580-34 drives, external power supply 208
Activation switch 208
Cable types and lengths 209
Grounding of protective shields 209
Operation principle 210
Start-up including validation test 211
Competence 211
Validation test reports 211
Validation test procedure 211
Use 213
Maintenance 215
Competence 215
Fault tracing 216
Safety data 217
Terms and abbreviations 219
TÜV certificate 220
Declarations of conformity 221

24 Resistor braking

Contents of this chapter 223
Operation principle and hardware description 223
Planning the braking system 223
Selecting the default brake circuit components - ABB chopper and ABB resistor 223

Calculating the maximum allowed braking power for a custom duty cycle – ABB chopper and ABB resistor 224
Selecting the default brake circuit components - ABB brake chopper and custom resistor 224
Selecting custom resistors 225
Calculating the maximum allowed braking power for a custom duty cycle – ABB chopper and custom resistor 226
Example 1 226
Example 2 226
Selecting and routing brake resistor cables 227
Minimizing electromagnetic interference 227
Maximum cable length 227
Selecting the installation location for the brake resistors 227
Protecting the system against thermal overload 228
Protecting the resistor cable against short-circuits 228
Mechanical installation of resistors 228
Electrical installation 228
Measuring the insulation resistance of the brake resistor circuit 228
Connection diagram 229
Connection procedure 229
Start-up 230
Technical data 231

25 Filters

Contents of this chapter 233
d*u*/d*t* filters 233
When is a d*u*/d*t* filter necessary? 233
Selection table 233
Ordering codes 234
Description, installation and technical data of the FOCH filters 234

26 CAIO-01 bipolar analog I/O adapter module

Contents of this chapter 235
Product overview 235
Layout 236
Mechanical installation 237
Necessary tools 237
Unpacking and examining the delivery 237
Installing the module 237
Electrical installation 237
Necessary tools 237
Wiring 237
Start-up 238
Setting the parameters 238
Diagnostics 238
LEDs 238
Technical data 238
Isolation areas 239
Dimension drawings 240

27 CHDI-01 115/230 V digital input extension module

Contents of this chapter 241
Product overview 241
Layout and connection examples 242
Mechanical installation 243
Necessary tools 243
Unpacking and examining the delivery 243
Installing the module 243
Electrical installation 243
Necessary tools 243
Wiring 243
Start-up 243
Setting the parameters 243
Parameter setting example for relay output 243
Fault and warning messages 244
Technical data 244
Dimension drawing 244

28 CMOD-01 multifunction extension module (external 24 V AC/DC and digital I/O)

Contents of this chapter 247
Product overview 247
Layout and example connections 248
Mechanical installation 249
Necessary tools 249
Unpacking and examining the delivery 249
Installing the module 249
Electrical installation 249
Necessary tools 249
Wiring 249
Start-up 249
Setting the parameters 249
Diagnostics 250
Faults and warning messages 250
LEDs 250
Technical data 250
Dimension drawing 251

29 CMOD-02 multifunction extension module (external 24 V AC/DC and isolated PTC interface)

Contents of this chapter 253
Product overview 253
Layout and example connections 254
Mechanical installation 254
Necessary tools 254
Unpacking and examining the delivery 255
Installing the module 255
Electrical installation 255
Necessary tools 255
Wiring 255

Start-up 255
Setting the parameters 255
Diagnostics 255
Faults and warning messages 255
LEDs 256
Technical data 256
Dimension drawing 257

Step-by-step drawings for an installation example in Rittal VX25 800 mm wide enclosure

Handling the drive module, power cable connection diagram 259
Installing the drive module and LCL filter module into a Rittal VX25 enclosure 260
Connecting the motor cables and installing the shrouds 265
Connecting the input power cables and installing the shrouds 268
Installing the air baffles and removing the cardboard covers 270

Further information

1

Safety instructions

Contents of this chapter

This chapter contains the safety instructions which you must obey when you install, start-up, operate and do maintenance work on the drive. If you ignore the safety instructions, injury, death or damage can occur.

Use of warnings and notes

Warnings tell you about conditions which can cause injury or death, or damage to the equipment. They also tell you how to prevent the danger. Notes draw attention to a particular condition or fact, or give information on a subject.

The manual uses these warning symbols:



WARNING!
Electricity warning tells about hazards from electricity which can cause injury or death, or damage to the equipment.



WARNING!
General warning tells about conditions other than those caused by electricity, which can cause injury or death, or damage to the equipment.



WARNING!
Electrostatic sensitive devices warning tells you about the risk of electrostatic discharge which can cause damage to the equipment.

General safety in installation, start-up and maintenance

These instructions are for all personnel who do work on the drive.

WARNING!
Obey these instructions. If you ignore them, injury or death, or damage to the equipment can occur.

- Keep the drive in its package until you install it. After unpacking, protect the drive from dust, debris and moisture.
- Use the required personal protective equipment: safety shoes with metal toe cap, safety glasses, protective gloves and long sleeves, etc. Some parts have sharp edges.
- Lift a heavy drive with a lifting device. Use the designated lifting points. See the dimension drawings.
- Obey the local laws and regulations applicable to lifting, such as requirements for planning the lifting, for capacity and condition of lifting equipment, and for training of personnel.
- Attach the drive cabinet to the floor to prevent it from falling over. The cabinet has a high center of gravity. When you pull out heavy components or power modules, there is a risk of overturning. Attach the cabinet also to the wall when necessary.



- Do not use the module extraction/installation ramp with plinth heights that exceed the maximum allowed height.
- Attach the module extraction/installation ramp carefully.
- Make sure that the module does not fall over when you move it on the floor: To open the support legs, press each leg a little down and turn it aside (1, 2). Whenever possible attach the module also with chains. Do not tilt the drive module. It is heavy and its center of gravity is high. The module overturns when tilted more than 5 degrees. Do not leave the module unattended on a sloping floor.

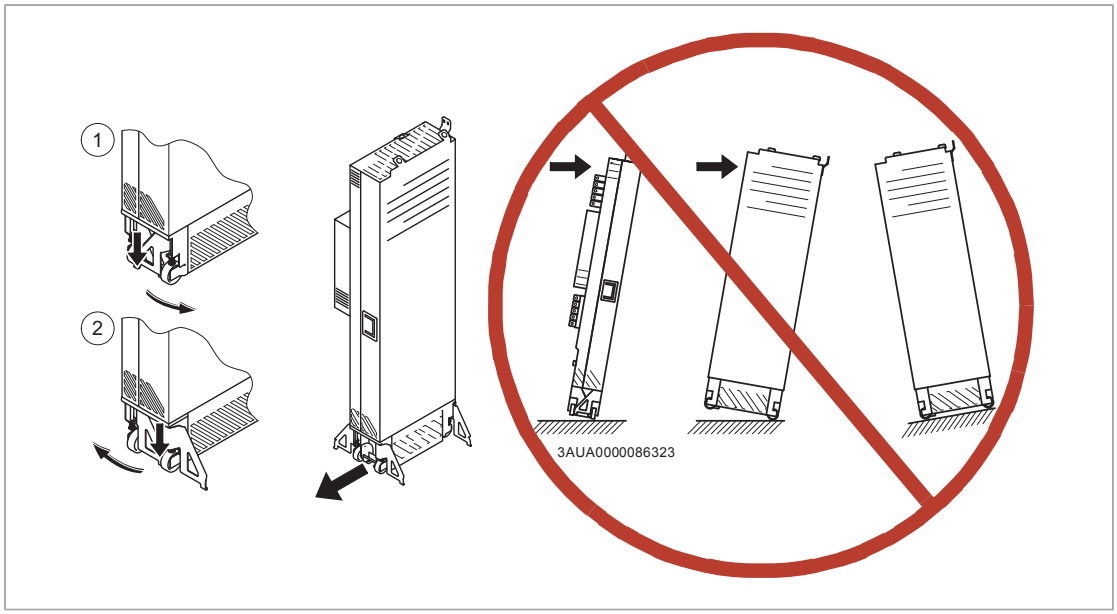

- To prevent the drive module from falling, attach its top lifting lugs with chains to the cabinet (1) before you push the module into the cabinet and pull it from the cabinet. Push the module into the cabinet and pull it from the cabinet carefully preferably with help from another person. Keep a constant pressure with one foot on the base of the module (2) to prevent the module from falling on its back.

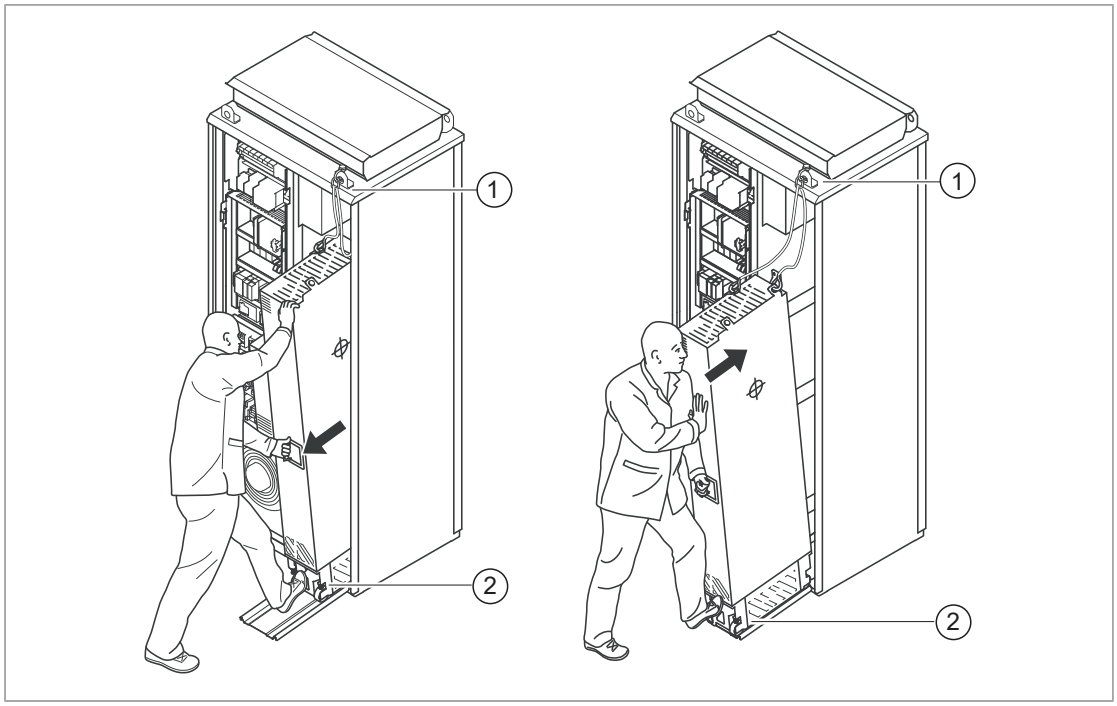

- Beware of hot surfaces. Some parts, such as heatsinks of power semiconductors, and brake resistors, remain hot for a while after disconnection of the electrical supply.
- Vacuum clean the area around the drive before the start-up to prevent the drive cooling fan from drawing dust inside the drive.

- Make sure that debris from drilling, cutting and grinding does not go into the drive during installation. Electrically conductive debris inside the drive can cause damage or malfunction.
- Make sure that there is sufficient cooling. See the technical data.
- Keep the cabinet doors closed when the drive is powered. With the doors open, a risk of a potentially fatal electric shock, arc flash or high-energy arc blast exists. If you cannot avoid working on a powered drive, obey the local laws and regulations on live working (including – but not limited to – electric shock and arc protection).
- Before you adjust the drive operation limits, make sure that the motor and all driven equipment can operate throughout the set operation limits.
- Before you activate the automatic fault reset or automatic restart functions of the drive control program, make sure that no dangerous situations can occur. These functions reset the drive automatically and continue operation after a fault or supply break. If these functions are activated, the installation must be clearly marked as defined in IEC/EN/UL 61800-5-1, subclause 6.5.3, for example, "THIS MACHINE STARTS AUTOMATICALLY".
- The maximum number of drive power-ups is five in ten minutes. Too frequent power-ups can damage the charging circuit of the DC capacitors.
- If you have connected safety circuits to the drive (for example, Safe torque off or emergency stop), validate them at start-up. See separate instructions for the safety circuits.
- Beware of hot air exiting from the air outlets.
- Do not cover the air inlet or outlet when the drive is running.

Note:

- If you select an external source for the start command and it is on, the drive will start immediately after fault reset unless you configure the drive for pulse start. See the firmware manual.
- If the drive is in remote control mode, you cannot stop or start the drive with the control panel.
- Only authorized persons are allowed to repair a malfunctioning drive.

Electrical safety in installation, start-up and maintenance

Electrical safety precautions

These electrical safety precautions are for all personnel who do work on the drive, motor cable or motor.



WARNING!
Obey these instructions. If you ignore them, injury or death, or damage to the equipment can occur.

If you are not a qualified electrical professional, do not do installation or maintenance work.

Do these steps before you begin any installation or maintenance work.

1. Clearly identify the work location and equipment.
2. Disconnect all possible voltage sources. Make sure that re-connection is not possible. Lock out and tag out.
   - Open the main disconnecting device of the drive.
   - Open the charging switch if present.
   - Open the disconnector of the supply transformer. (The main disconnecting device in the drive cabinet does not disconnect the voltage from the AC input power busbars of the drive cabinet.)
   - Open the auxiliary voltage switch-disconnector (if present), and all other possible disconnecting devices that isolate the drive from dangerous voltage sources.
   - If you have a permanent magnet motor connected to the drive, disconnect the motor from the drive with a safety switch or by other means.
   - Disconnect all dangerous external voltages from the control circuits.
   - After you disconnect power from the drive, always wait 5 minutes to let the intermediate circuit capacitors discharge before you continue.
3. Protect any other energized parts in the work location against contact.
4. Take special precautions when close to bare conductors.
5. Measure that the installation is de-energized. Use a quality voltage tester. If the measurement requires removal or disassembly of shrouding or other cabinet structures, obey the local laws and regulations applicable to live working (including – but not limited to – electric shock and arc protection).
   - Before and after you measure the installation, verify the operation of the voltage tester on a known voltage source.
   - Make sure that the voltage between the drive input power terminals (L1, L2, L3) and the grounding (PE) busbar is zero.
   - Make sure that the voltage between the drive output terminals (T1/U, T2/V, T3/W) and the grounding (PE) busbar is zero.

     Important! Repeat the measurement also with the DC voltage setting of the tester. Measure between each phase and ground. There is a risk of dangerous DC voltage charging due to leakage capacitances of the motor circuit. This voltage can remain charged for a long time after the drive power-off. The measurement discharges the voltage.
   - Make sure that the voltage between the drive DC terminals (UDC+ and UDC-) and the grounding (PE) terminal is zero.

6. Install temporary grounding as required by the local regulations.
7. Ask for a permit to work from the person in control of the electrical installation work.

Additional instructions and notes



WARNING!
Obey these instructions. If you ignore them, injury or death, or damage to the equipment can occur.

If you are not a qualified electrical professional, do not do installation or maintenance work.

- Keep the cabinet doors closed when the drive is powered. With the doors open, a risk of a potentially fatal electric shock, arc flash or high-energy arc blast exists.
- Make sure that the electrical power network, motor/generator, and environmental conditions agree with the drive data.
- Do not do insulation or voltage withstand tests on the drive.
- If you have a cardiac pacemaker or other electronic medical device, keep away from the area near motor, drive, and the drive power cabling when the drive is in operation. There are electromagnetic fields present which can interfere with the function of such devices. This can cause a health hazard.
- Remove the code labels attached to mechanical parts such as busbars, shrouds and sheet metal parts before installation. They may cause bad electrical connections, or, after peeling off and collecting dust in time, cause arcing or block the cooling air flow.

Note:

- When the drive is connected to the input power, the motor cable terminals and the DC bus are at a dangerous voltage.
  After disconnecting the drive from the input power, these remain at a dangerous voltage until the intermediate circuit capacitors have discharged.
- External wiring can supply dangerous voltages to the relay outputs of the control units of the drive.
- The Safe torque off function does not remove the voltage from the main and auxiliary circuits. The function is not effective against deliberate sabotage or misuse.

Printed circuit boards



WARNING!
Use a grounding wristband when you handle printed circuit boards. Do not touch the boards unnecessarily. The boards contain components sensitive to electrostatic discharge.

Grounding

These instructions are for all personnel who are responsible for the grounding of the drive.



WARNING!
Obey these instructions. If you ignore them, injury or death, or equipment malfunction can occur, and electromagnetic interference can increase.

If you are not a qualified electrical professional, do not do grounding work.

- Always ground the drive, the motor and adjoining equipment. This is necessary for the personnel safety.
- Make sure that the conductivity of the protective earth (PE) conductors is sufficient and that other requirements are met. See the electrical planning instructions of the drive. Obey the applicable national and local regulations.
- When using shielded cables, make a 360° grounding of the cable shields at the cable entries to reduce electromagnetic emission and interference.
- In a multiple-drive installation, connect each drive separately to the protective earth (PE) busbar of the power supply.

General safety in operation

These instructions are for all personnel that operate the drive.

WARNING!
Obey these instructions. If you ignore them, injury or death, or damage to the equipment can occur.

- Keep the cabinet doors closed when the drive is powered. With the doors open, a risk of a potentially fatal electric shock, arc flash or high-energy arc blast exists.
- If you have a cardiac pacemaker or other electronic medical device, keep away from the area near motor, drive, and the drive power cabling when the drive is in operation. There are electromagnetic fields present which can interfere with the function of such devices. This can cause a health hazard.
- Give a stop command to the drive before you reset a fault. If you have an external source for the start command and the start is on, the drive will start immediately after the fault reset, unless you configure the drive for pulse start. See the firmware manual.
- Before you activate the automatic fault reset or automatic restart functions of the drive control program, make sure that no dangerous situations can occur. These functions reset the drive automatically and continue operation after a fault or supply break. If these functions are activated, the installation must be clearly marked as defined in IEC/EN/UL 61800-5-1, subclause 6.5.3, for example, "THIS MACHINE STARTS AUTOMATICALLY".

Note:

- The maximum number of drive power-ups is five in ten minutes. Too frequent power-ups can damage the charging circuit of the DC capacitors. If you need to start or stop the drive, use the control panel keys or commands through the I/O terminals of the drive.
- If the drive is in remote control mode, you cannot stop or start the drive with the control panel.

Additional instructions for permanent magnet motor drives

Safety in installation, start-up, maintenance

These are additional warnings concerning permanent magnet motor drives. The other safety instructions in this chapter are also valid.

WARNING!
Obey these instructions. If you ignore them, injury or death, or damage to the equipment can occur.

If you are not a qualified electrical professional, do not do installation or maintenance work.

- Do not do work on the drive when a rotating permanent magnet motor is connected to it. A rotating permanent magnet motor energizes the drive including its input and output power terminals.

Before installation, start-up and maintenance work on the drive:

- Stop the drive.
- Disconnect the motor from the drive with a safety switch or by other means.
- If you cannot disconnect the motor, make sure that the motor cannot rotate during work. Make sure that no other system, like hydraulic crawling drives, can rotate the motor directly or through any mechanical connection like belt, nip, rope, etc.
- Do the steps in section Electrical safety precautions (Page 21).
- Install temporary grounding to the drive output terminals (T1/U, T2/V, T3/W). Connect the output terminals together as well as to the PE.

During the start-up:

- Make sure that the motor cannot run overspeed, for example, driven by the load. Motor overspeed causes overvoltage that can damage or destroy the capacitors in the intermediate circuit of the drive.

Safety in operation



WARNING!
Make sure that the motor cannot run overspeed, for example, driven by the load. Motor overspeed causes overvoltage that can damage or destroy the capacitors in the intermediate circuit of the drive.



2

Introduction to the manual

Contents of this chapter

This chapter describes the intended audience and contents of the manual. It contains a flowchart of steps in examining the delivery, installing and commissioning the drive. The flowchart refers to chapters/sections in this manual and other manuals.

Applicability

This manual applies to ACH580-34 drive modules intended for user-defined cabinet installations.

Target audience

This manual is intended for people who plan the installation, install, commission and do maintenance work on the drive, or create instructions for the end user of the drive concerning the installation and maintenance of the drive.

Read the manual before you work on the drive. You are expected to know the fundamentals of electricity, wiring, electrical components and electrical schematic symbols.

Categorization by frame size and option code

The frame size identifies information which concerns only a certain frame size of the drive. The frame size is shown on the type designation label. All frame sizes are listed in the technical data.

The option code (A123) identifies information which concerns only a certain optional selection. The options included in the drive are listed on the type designation label.

Quick installation, commissioning and operating flowchart

Task	See chapter/section
Plan the mechanical and electrical installation and acquire the accessories needed (cables, fuses, etc.). Examine the ambient conditions, ratings, required cooling air flow, input power connection, compatibility of the motor, motor connection, and other technical data.	Guidelines for planning the mechanical installation (Page 53) Guidelines for planning the electrical installation (Page 73) Technical data (Page 169) Resistor braking (Page 223) Option manual (if optional equipment is included)
⬇	
Unpack and examine the units. Make sure that all necessary optional modules and equipment are present and correct. Only intact units can be started up.	Moving and unpacking (Page 63) Examining the delivery (Page 68) If the drive module has been non-operational for a year or more, the converter DC link capacitors need to be reformed. (Reforming the capacitors (Page 161))
⬇	
Examine the installation site. Attach the base of the cabinet to the floor.	Examining the installation site (Page 63) Ambient conditions (Page 184)
⬇	
Route the cables.	Routing the cables (Page 87)
⬇	
Measure the insulation of the supply cable, the motor and the motor cable and the resistor cable (if present).	Measuring the insulation (Page 98)
⬇	
Standard drive modules • Install the additional components into the enclosure: for example, main disconnector, main contactor, main AC fuses, etc.. • Install the drive module into the enclosure. • Connect the motor cables to the drive module terminals. • Connect the brake resistor and DC connection cables (if any) to the drive module terminals. • If the main disconnector is installed into the enclosure, connect it to the drive module terminals and the input power cabling to the disconnector.	Installing the drive module and LCL filter module into an enclosure (Page 137) Connecting the motor cables and installing the shrouds (option +B051) (Page 138) Connecting the input cables and installing the shrouds (option +B051) (Page 139) Connecting the control cables to the integrated control unit (Page 105) Manuals for any optional equipment
⬇	
Drive modules with IP20 shrouds (option +B051)	Step-by-step drawings for an installation example in Rittal VX25 800 mm wide enclosure (Page 259)
⬇	
Connect the control cables to the drive control unit.	Connecting the control cables to the integrated control unit (Page 105)
⬇	
Examine the installation.	Installation checklist (Page 143)
⬇	
Commission the drive.	Start-up (Page 145)
⬇	
Commission the brake chopper (if used).	Resistor braking (Page 223)
⬇	

Task	See chapter/section
Operate the drive: start, stop, speed control etc.	Appropriate firmware manual

Terms and abbreviations

Term	Description
CAIO-01	CAIO-01 optional bipolar analog input and unipolar analog output extension module
CCU	Type of control unit
CHDI-01	115/230 V digital input extension module
CMOD-01	Multifunction extension module (external 24 V AC/DC and digital I/O extension)
CMOD-02	Multifunction extension module (external 24 V AC/DC and isolated PTC interface)
Drive	Frequency converter for controlling AC motors
EMC	Electromagnetic compatibility
FBIP-21	BACnet/IP adapter module
FCAN	Optional CANopen® adapter module
FCNA-01	Optional ControlNet™ adapter module
FDNA-01	Optional DeviceNet™ adapter module
FECA-01	Optional EtherCAT® adapter module
FEIP-21	Optional Ethernet adapter module for EtherNet/IP™
FENA-21	Optional Ethernet adapter module for EtherNet/IP™, Modbus TCP and PROFINET IO protocols, 2-port
FEPL-02	Optional Ethernet POWERLINK adapter module
FLON-01	Optional LonWorks® adapter module
FMBT-21	Optional Ethernet adapter module for Modbus TCP protocol
FPBA-01	Optional PROFIBUS DP® adapter module
FPNO-21	Optional PROFINET IO adapter module
Frame, frame size	Physical size of the drive or power module
FSCA-01	Optional RS-485 (Modbus/RTU) adapter
IGBT	Insulated gate bipolar transistor
Line-side converter	Converts alternating current and voltage to direct current and voltage for the intermediate DC link of the drive
Motor-side converter	Converts intermediate DC link current to AC current for the motor
STO	Safe torque off (IEC/EN 61800-5-2)

Related documents

You can find manuals on the Internet. See below for the relevant code/link. For more documentation, go to www.abb.com/drives/documents.



ACH580-34 manuals

3

Operation principle and hardware description

Contents of this chapter

This chapter describes the operating principle and construction of the drive module.

Operation principle

The ACH580-34 is an ultra-low harmonic drive module for controlling asynchronous AC induction motors, permanent magnet motors in open loop control and synchronous reluctance motors.

The drive includes a line-side converter and a motor-side inverter. The parameters and signals for both of them are combined into one primary user program.

Block diagram of the main circuit of the drive module

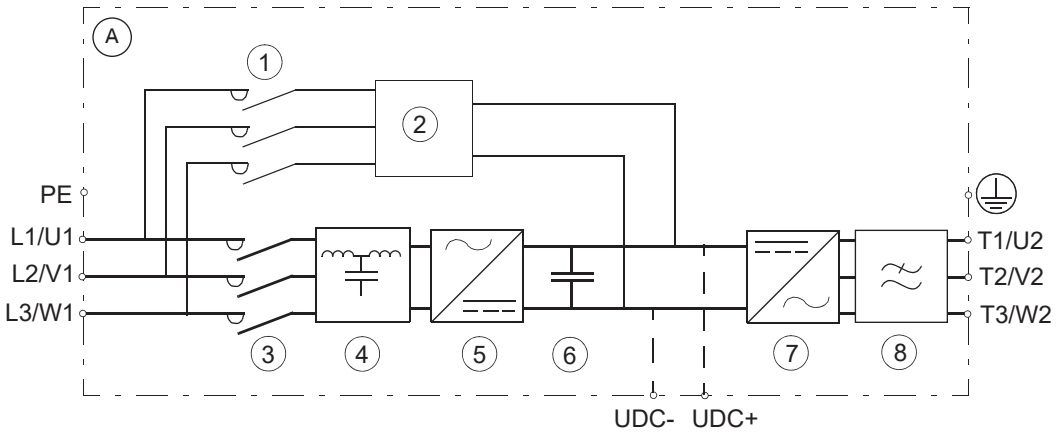

A	ACH580-34 drive module
1	Charging circuit contactor
2	Charging circuit
3	Line contactor
4	LCL filter
5	Line-side converter
6	DC link. DC circuit between the line-side converter and motor-side converter.
7	Motor-side converter
8	Common mode filter (+E208)

Line-side converter

The line-side converter rectifies three-phase AC current to direct current for the intermediate DC link of the drive.

The following figure shows the simplified main circuit diagram of the line-side converter. The line-side converter is controlled by a type ZCU control unit.

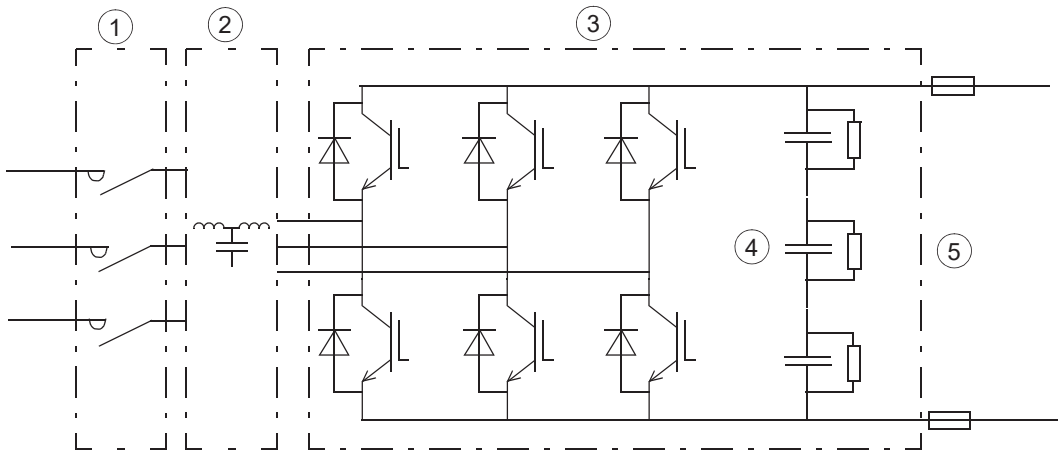

1	LCL filter contactor
2	LCL filter
3	Line-side converter
4	DC capacitors
5	DC link

AC voltage and current waveforms

The AC current is sinusoidal at a unity power factor. The LCL filter suppresses the AC voltage distortion and current harmonics. The high AC inductance smooths the line voltage waveform distorted by the high-frequency switching of the converter. The capacitive component of the filter effectively filters the high-frequency (over 1 kHz) harmonics.

Charging

Charging is needed to power up the DC link capacitors smoothly. Discharged capacitors cannot be connected to the full supply voltage. The voltage must be increased gradually until the capacitors are charged and ready for normal use. The drive contains a resistive charging circuit consisting of fuses, contactor and charging resistors. The charging circuit is in use after start-up until the DC voltage has risen to a predefined level.

Motor-side converter

The motor-side converter converts the DC back to AC that rotates the motor. It is also able to feed the braking energy from a rotating motor back into the DC link. The motor-side converter is controlled by a type CCU-24 control unit. This is called the drive control unit or control unit in this manual.

DC voltage boost function

The drive can boost its DC link voltage. In other words, it can increase the operating voltage of the DC link from its default value.

To take the DC voltage boost function in use, adjust the user DC voltage reference value in parameter 94.22. The drive follows the user reference If it is greater than the measured DC voltage of the drive at the time of power up.

Benefits of the DC voltage boost

- possibility to supply nominal voltage to the motor even when the supply voltage of the drive is below the motor nominal voltage level
- compensation of voltage drop due to output filter, motor cable or input supply cables
- increased motor torque in the field weakening area (ie, when the drive operates the motor in the speed range above the motor nominal speed)
- possibility to use a motor with higher nominal voltage than the actual supply voltage of the drive. Example: A drive that is connected to 415 V can supply 460 V to a 460 V motor.

Impact of DC voltage boost on input current

When the DC voltage is boosted, the drive can be drawing more input current than what is rated in the type designation label. Derating is needed:

- when the motor is running at the field weakening area or close to it and the drive is running at nominal load or close to it
- when the situation lasts long
- when the boost is more than 10%.

The rise of the input current can heat the fuses. If there are brief low line situations when the drive boosts voltage significantly, there is a risk for nuisance fuse blowing of smaller AC line fuses.

For more information, refer to ACH580-31, ACQ580-31, ACH580-34 and ACQ580-34 drives product note on DC voltage boost (3AXD50000769407 [English]).

Active braking function (option +N8056)

The line-side converter with active braking function can transfer regenerated energy (up to 50% of the rated power) back to the electrical power system. The active braking function is available with option code +N8056 and licensing.

Example applications:

- tunnel ventilation can achieve quick reversing without brake chopper
- catching up a spinning load and reversing in flying start.

DC connection

You can connect an external brake chopper to the drive via the DC terminals. See chapter Resistor braking (Page 223).

WARNING!
Do not connect the drive DC link to a common DC system. The drive will get damaged.

Layout

Standard drive module configuration



A	Drive module. Contains line-side converter and motor side converter.	4	Lower front cover
B	LCL filter module	5	Cooling fan cassette
C	LCL filter module connected to the drive module	6	Support legs
1	Circuit board compartment	7	Pedestal
2	Upper front cover	8	Busbars for connecting the LCL filter module to the drive module
3	Control panel	9	Cover on busbar connections

See section Drive module (Page 37) for descriptions and photos of the drive module. For LCL filter module, see section LCL filter module (Page 38).

Drive with clear plastic shrouds (option +B051)

For part descriptions, see section Standard drive module configuration (Page 35). For clear plastic shrouds, see section Drive module (Page 37)



Drive module

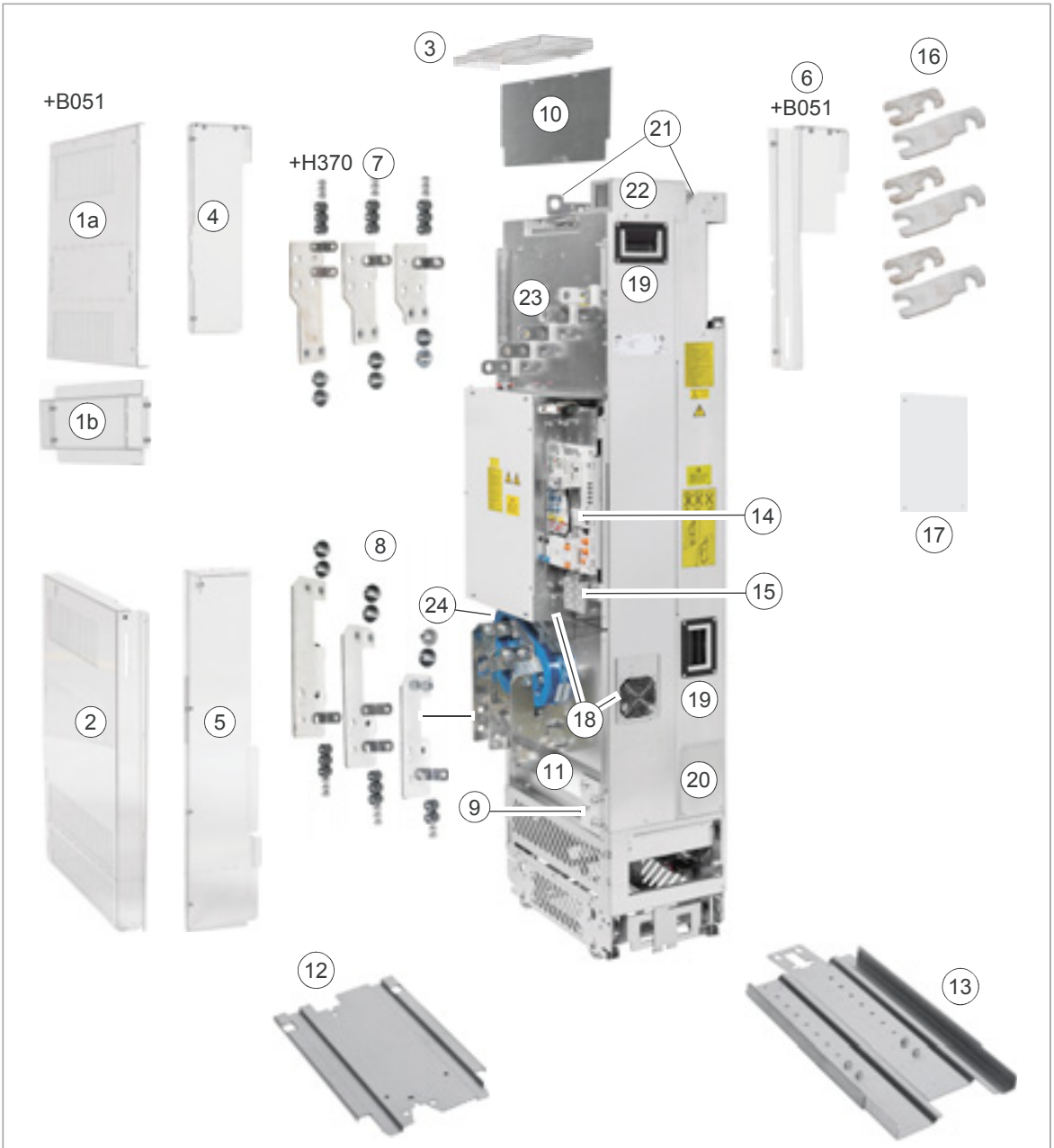

1	Clear plastic shroud to be attached onto the drive module input power cabling (1a). Entry shroud for side cabling (1b) (option +B051).	13	Telescopic extraction and insertion ramp
2	Clear plastic shrouds to be attached onto the drive module output power cabling (option +B051)	14	Control unit
3	Clear plastic shroud to be attached on top of the drive module (entry for top cabling) (option +B051).	15	Control cable clamp plate
4	Upper back clear plastic shroud (option +B051)	16	Busbars for connecting the drive module to the LCL filter electrically
5	Lower back clear plastic shroud (option +B051)	17	Cover for the busbar connection
6	Front clear plastic shroud (option +B051)	18	Auxiliary cooling fan

7	Input power cable connection terminals (option +H370)	19	Handle
8	Output power cable connection terminals (assembled at the factory)	20	Cover. When removed, you can attach the drive module to the LCL filter module.
9	Grounding terminal for output power cable shields	21	Lifting lugs
10	Metallic shroud. With option +H370, the shroud includes a ground bar.	22	Connector for charging circuit switch or contactor
11	Main cooling fans	23	Input power cable connection busbars (L1/U1, L2/V1, L3/W1 and DC+ and DC- busbars (UDC+ and UDC-)
12	Pedestal guide plate for the drive module	24	Common mode filter

LCL filter module

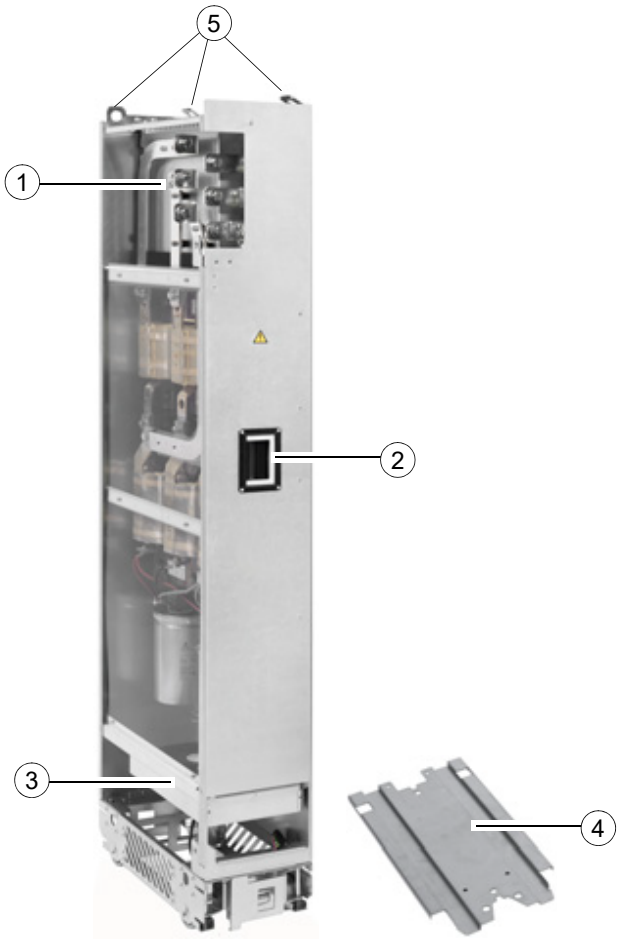

1	Busbars for connecting the LCL filter module to the drive module electrically	4	Pedestal guide plate for the LCL filter module
2	Handle	5	Lifting lugs
3	Main cooling fans	-	-

Control panel

In the standard drive module configuration, the control panel is located on the front cover of the module.

DPMP-02 door mounting platform allows you to mount the control panel on the cabinet door.

For the use of the control panel, see the firmware manual or ACS-AP-I, -S, -W and ACH-AP-H, -W assistant control panels user's manual (3AUA0000085685 [English]).



1	ACH-AP-H hand-off-auto control panel (standard)
2	CDUM-01 blank control panel cover (no control panel) (option +J424)
3	ACH-AP-W hand-off-auto control panel with bluetooth interface (option +J429)
4	DPMP-02 control panel mounting platform (standard)

Overview of power and control connections

The diagram shows the power connections and control interfaces of the drive module.

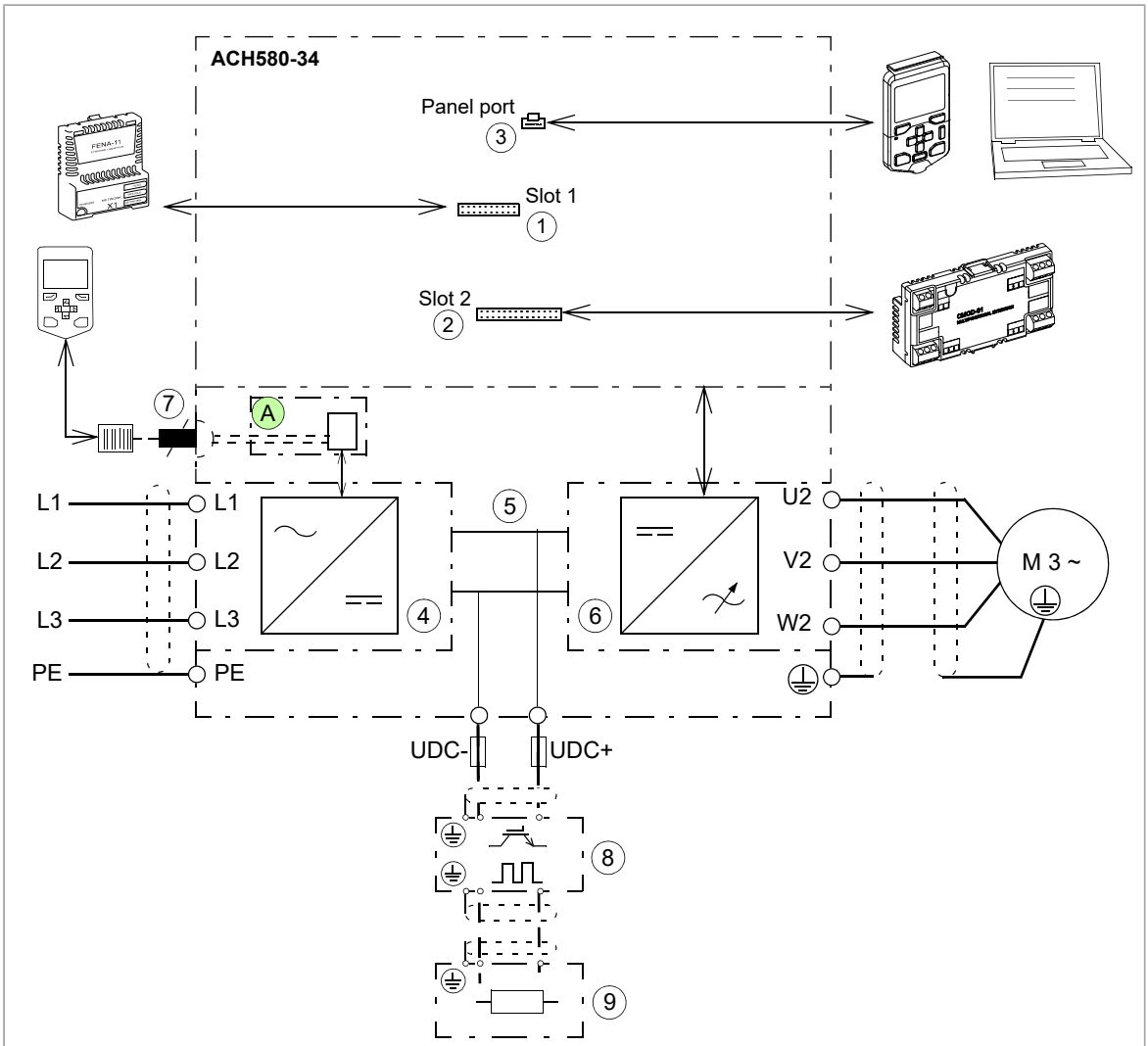

A	Line-side converter control unit
1	Option slot 1 for optional fieldbus adapter modules
2	Option slot 2 for optional I/O extension modules
3	Panel port
4	Line-side converter
5	DC link
6	Motor-side converter
7	Socket for external control panel (not required for normal operation of the drive)
8	Brake chopper (optional, see chapter Resistor braking (Page 223))
9	Brake resistors (optional, see chapter Resistor braking (Page 223))

Type designation label

The type designation label includes a rating, markings, a type designation and a serial number, which allow individual recognition of each drive module. The type designation label is located on the front cover. An example label is shown below.

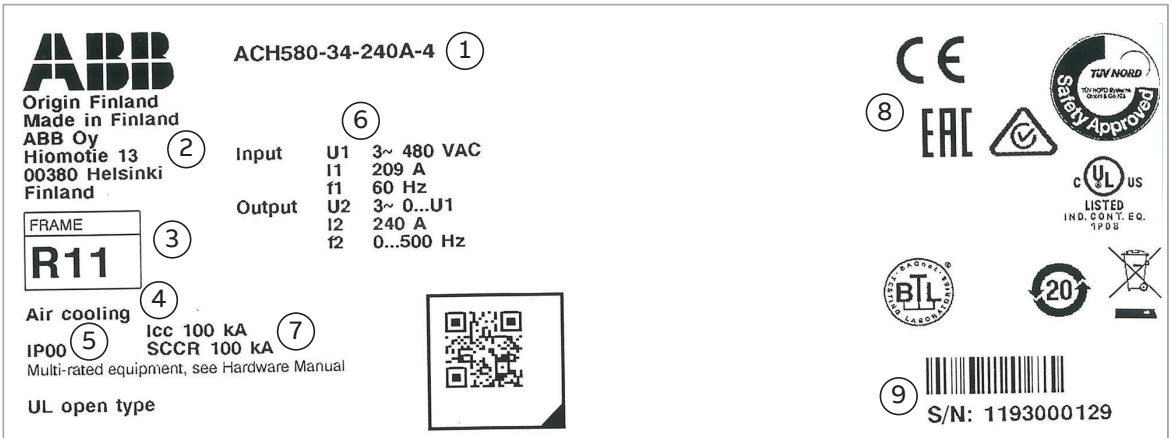

1	Type designation, see section Type designation key.
2	Name and address of the manufacturer
3	Frame size
4	Cooling method
5	Degree of protection
6	Ratings, see section Electrical ratings (Page 169).
7	Prospective short-circuit current rating, see section Electrical power network specification (Page 182).
8	Valid markings
9	Serial number. The first digit of the serial number refers to the manufacturing plant. The next four digits refer to the unit's manufacturing year and week, respectively. The remaining digits complete the serial number so that there are no two units with the same number.
10	Link to product information

Type designation key

The type designation contains information on the specifications and configuration of the drive. The first digits from left express the basic drive type. The optional selections are given thereafter, separated by plus signs. The main selections are described below. Not all selections are available for all types. For more information, refer to the ordering instructions available separately on request.

Basic code

Code	Description
ACH580	Product series
Type	

Code	Description
-34	The standard delivery includes: ultra-low-harmonic single drive module to be installed in an enclosure, IP00 (UL Type Open), bookshelf mounting with pedestal, integrated control unit with ACH-AP-H Assistant control panel with panel holder, build-in LCL filter, full-size output cable connection terminals, internal EMC filter (+E210), common mode filter (+E208), DC connection busbars, ACH580 HVAC standard control program, RS-485 Modbus RTU adapter module, Safe torque off function, coated boards, printed multilingual quick installation and start-up guide (EN, DE, ES, IT, FR, TR), extraction/installation ramp. Refer to section Option codes (Page 42) for options.
Size	
-xxxxA	See the ratings table.
Voltage range	
-4	380…480 V AC. This is indicated in the type designation label as typical input voltage level (3~ 400/480 VAC)

Option codes

Code	Description
B051	IP20 shrouds for cabling area
E208	Common mode filter (included as standard)
E210	EMC filter for 2nd environment TN (grounded) or IT (ungrounded) system, category C3 (included as standard)
0H371	No full size cable connection terminals for output power cables
H370	Full-size input terminals
0J400	No control panel
J400	ACH-AP-H control panel (included as standard)
J410	DPMP-02 door mounting kit for the control panel (included as standard)
J424	Blank control panel cover (no control panel)
K451	FDNA-01 DeviceNet™ adapter module
K452	FLON-01 LonWorks® adapter module
K454	FPBA-01 PROFIBUS DP adapter module
K457	FCAN-01 CANopen adapter module
K458	FSCA-01 RS-485 (Modbus/RTU) adapter module
K462	FCNA-01 ControlNet™ adapter module
K465	FBIP-01 BACnet/IP adapter module, 2-port
K469	FECA-01 EtherCat adapter module
K470	FEPL-02 EtherPOWERLINK adapter module
K475	FENA-21 Ethernet adapter module for EtherNet/IP™, Modbus TCP and PROFINET IO protocols, 2-port
K490	FEIP-21 EtherNet/IP adapter module
K491	FMBT-21 Modbus/TCP adapter module
K492	FPNO-21 PROFINET IO adapter module
L501	CMOD-01 External 24 V AC/DC and digital I/O extension (2×RO and 1×DO)
L512	CHDI-01 115/230 V digital input module (six digital inputs and two relay outputs)
L523	CMOD-02 External 24 V and isolated PTC interface

Code	Description
L525	CAIO-01 analog I/O extension module
L537	CPTC-02 ATEX-certified thermistor protection module
N2000	Standard software language set (default; includes EN, DE, ES, PT, FR, ZH, IT, FI, PL, RU, TR)
N2901	European software language set (default for SV, CZ, HU, DA, NL; includes EN, DE, ES, PT, FR, SV, CZ, HU, DA, NL)
N2902	Asian software language set (default for KO, TH; includes EN, DE, ES, PT, FR, ZH, KO, TH)
N8056	Active braking
0P919	No extraction/installation ramp
P906	External control unit (outside the drive module)
P931	Extended warranty 36 months from delivery
P932	Extended warranty 60 months from delivery
Q971	ATEX-certified safe disconnection function

4

Generic cabinet planning instructions

Contents of this chapter

This chapter contains generic cabinet planning instructions applicable to any user-defined cabinet system. The topics discussed are essential for the safe and trouble-free use of the drive system.

Limitation of liability

The installation must always be designed and made according to applicable local laws and regulations. ABB does not assume any liability whatsoever for any installation which breaches the local laws and/or other regulations. Furthermore, if the recommendations given by ABB are not followed, the drive may experience problems that the warranty does not cover.

North America

Installations must be compliant with NFPA 70 (NEC)[1)] and/or Canadian Electrical Code (CE) along with state and local codes for your location and application.

[1)] National Fire Protection Association 70 (National Electric Code).

Cabinet construction

Basic requirements for the cabinet construction are listed below. Make sure that:

- the cabinet frame is sturdy enough to carry the weight of the components, control circuitry and other equipment installed in it
- the cabinet protects the modules against contact and agrees with the requirements for dust and humidity

- the cabinet frame and doors are strong enough to provide adequate protection against flames or pressure blast originating from inside the cabinet in case of arc flash or similar failure
- the cabinet has air inlet and outlet gratings that allow free flow of cooling air through the modules inside the cabinet.

Planning the layout of the cabinet

Plan a spacious layout for easy installation and maintenance. Sufficient cooling air flow, mandatory clearances, cables and cable support structures all require space.

Place the control unit(s) away from:

- main circuit components such as contactors, switches and power cables
- hot parts (heatsink, air outlet of the drive module).

Grounding of mounting structures

Arrange the grounding of the module by leaving the contact surfaces of the fastening points unpainted (bare metal-to-metal contact). The module frame is grounded to the PE busbar of the cabinet via the attaching surfaces, screws and the cabinet frame. Alternatively, use a separate grounding conductor between the PE terminal of the module and the PE busbar of the cabinet.

Ground also the other components in the cabinet according to the principle above.

Busbar material and joints

ABB recommends tin-plated copper, but bare copper and aluminum can also be used.

Before joining aluminum busbars, remove the oxide layer and apply suitable anti-oxidant joint compound.

Shrouds

The installation of shrouds (touch protection) to fulfill applicable safety regulations is the responsibility of the drive system builder.

Ready-made shrouding parts are available from ABB for some cabinet designs, see the ordering information.

Tightening torques

Unless a tightening torque is specified in the text, the following torques can be used.

Electrical connections

Size	Torque	Strength class
M3	0.5 N·m (4.4 lbf·in)	4.6...8.8
M4	1 N·m (9 lbf·in)	4.6...8.8
M5	4 N·m (35 lbf·in)	8.8
M6	9 N·m (6.6 lbf·ft)	8.8
M8	22 N·m (16 lbf·ft)	8.8
M10	42 N·m (31 lbf·ft)	8.8
M12	70 N·m (52 lbf·ft)	8.8
M16	120 N·m (90 lbf·ft)	8.8

Mechanical connections

Size	Max. torque	Strength class
M5	6 N·m (53 lbf·in)	8.8
M6	10 N·m (7.4 lbf·ft)	8.8
M8	24 N·m (17.7 lbf·ft)	8.8

Insulation supports

Size	Max. torque	Strength class
M6	5 N·m (44 lbf·in)	8.8
M8	9 N·m (6.6 lbf·ft)	8.8
M10	18 N·m (13.3 lbf·ft)	8.8
M12	31 N·m (23 lbf·ft)	8.8

Cable lugs

Size	Max. torque	Strength class
M8	15 N·m (11 lbf·ft)	8.8 (A2-70 or A4-70)
M10	32 N·m (23.5 lbf·ft)	8.8
M12	50 N·m (37 lbf·ft)	8.8

Cooling and degrees of protection

Planning the cooling

When you plan the cooling of the cabinet:

- make sure that the ventilation of the installation site is sufficient so that the cooling air flow and ambient temperature requirements of the module are met (see the hardware manual)
- leave enough free space around the components to ensure sufficient cooling. Observe the minimum clearances given for each component. For the module specific free space requirements, see the applicable hardware manual.

Air-cooled drive systems

Air inlets and outlets

Equip the air inlets and outlets with gratings that:

- are large enough to allow sufficient air flow in and out of the cabinet (critical for correct cooling of the module)
- guide the air flow
- protect against contact
- prevent water splashes from entering the cabinet
- ensure adequate protection against flames or pressure blast originating from inside the cabinet in case of arc flash or similar failure.

The drawing below shows two typical cabinet cooling solutions. The air inlet is at the bottom of the cabinet. The outlet is on the roof or on the upper part of the door if room height is limited.

Use an extra exhaust fan if the air outlet is on the cabinet door.

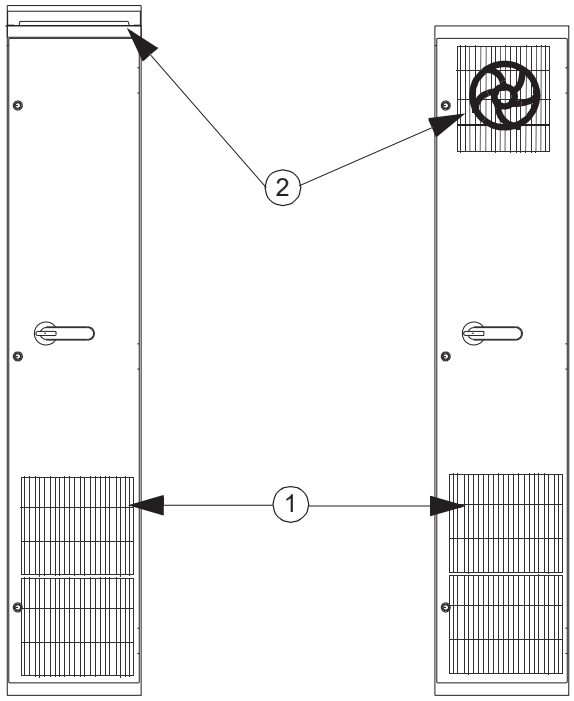

1	Air inlet	2	Air outlet

Arrange the cooling air flow through the components according to the technical data in the applicable hardware manual. See the specifications for:

- cooling air flow

  Note: The values stated for each component apply to continuous nominal load. If the load is cyclic or less than nominal, less cooling air is required.
- allowed ambient temperature and temperature rise inside the cabinet
- allowed pressure drop over the cabinet that the cooling fan can overcome
- air inlet and outlet sizes required for cooling and recommended filter material (if used).

Note: The heat dissipated by cables and other additional equipment must also be ventilated.

The internal cooling fans of the converter modules and filters are usually sufficient to keep the component temperatures low enough in IP20 and IP42 cabinets. For higher degrees of protection, or if the air outlet is in the cabinet door, extra fans can be necessary. If you install additional heat-generating components to the cabinet, make sure to upgrade the cooling system accordingly.

In IP54 cabinets, thick filter mats are used to prevent water splashes from entering the cabinet. This requires the installation of additional cooling equipment, such as a hot air exhaust fan.

Preventing the recirculation of hot air

Prevent hot air circulation outside the cabinet by leading the outgoing hot air away from the area where the inlet air to the cabinet is taken. Possible solutions are listed below:

- gratings that guide air flow at the air inlet and outlet
- air inlet and outlet at different sides of the cabinet
- cool air inlet in the lower part of the front door, and an extra exhaust fan on the roof of the cabinet.

Prevent hot air circulation inside the cabinet with, for example, leak-proof air baffles. Usually, no gaskets are required.

The drawing below shows the air flow inside and outside the cabinet.

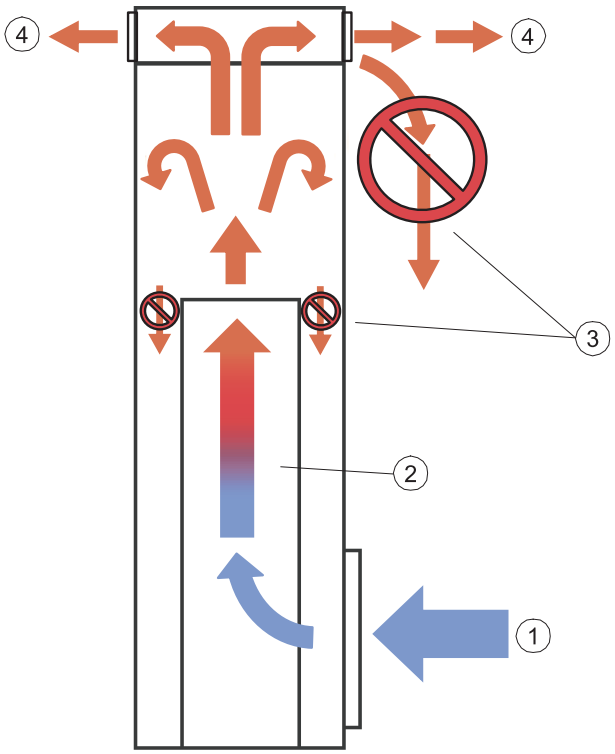

1	Air flow in
2	Power module
3	Hot air circulation to be prevented
4	Air flow out

EMC requirements

Note the following when you plan the electromagnetic compatibility of the cabinet:

- Generally, the fewer and smaller the holes in the cabinet, the better the interference attenuation. The maximum recommended diameter of a hole in galvanic metal contact in the covering cabinet structure is 100 mm (3.94 in). Pay special attention to the cooling air inlet and outlet gratings.
- The best galvanic connection between the steel panels is achieved by welding them together as no holes are necessary. If welding is not possible, ABB

recommends to leave the seams between the panels **unpainted** and equipped with special conductive EMC strips to provide adequate galvanic connection. Usually, reliable strips are made of flexible silicon mass covered with a metal mesh. The non-tightened touch-contact of the metal surfaces is not sufficient, so a conductive gasket between the surfaces is required. The maximum recommended distance between assembly screws is 100 mm (3.94 in).

- Construct sufficient high-frequency grounding network in the cabinet to avoid voltage differences and forming of high-impedance radiator structures. A good high-frequency grounding is made with short flat copper braids for low inductance. One-point high-frequency grounding cannot be used due to the long distances inside the cabinet.
- 360° high-frequency grounding of the cable shields at the cable entries improves the EMC shielding of the cabinet.
- ABB recommends 360° high-frequency grounding of the motor cable shields at their entries. The grounding can be implemented by a knitted wire mesh screening as shown below.

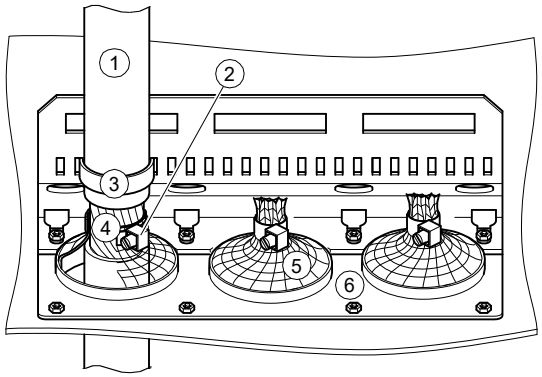

1 Cable
2 Cable tie
3 Strain relief
4 Bare cable shield
5 Knitted wire mesh
6 Cabinet entry plate

- ABB recommends 360° high-frequency grounding of the control cable shields at their entries. The shields can be grounded by means of conductive shielding cushions pressed against the cable shield from both directions as shown below.

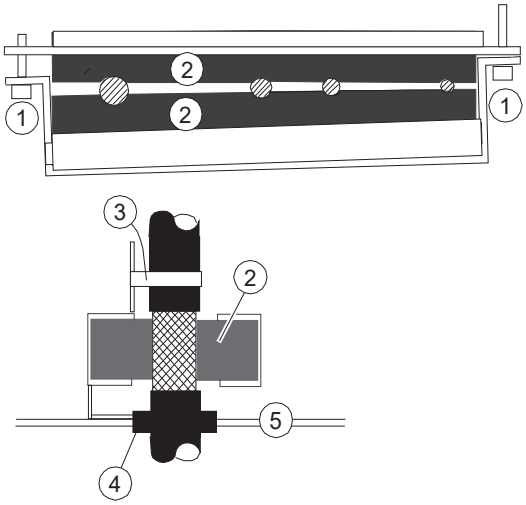

1 Tightening screw
2 EMI conductive cushion
3 Strain relief
4 Grommet
5 Entry plate

Attaching the cabinet

Refer to the cabinet manufacturer's instructions.

WARNING!
Do not attach the cabinet by electric welding. ABB does not assume any liability for damages caused by electric welding as the welding circuit can damage electronic circuits in the cabinet.

Cabinet placement on a cable duct

Note the following when you plan to place the cabinet on a cable duct:

- The cabinet structure must be sturdy enough. If the whole cabinet base is not supported from below, the cabinet weight will lie on the sections that the floor carries.
- Equip the cabinet with a sealed bottom plate and cable entries to ensure the degree of protection and to prevent the cooling air flow from the cable duct into the cabinet.

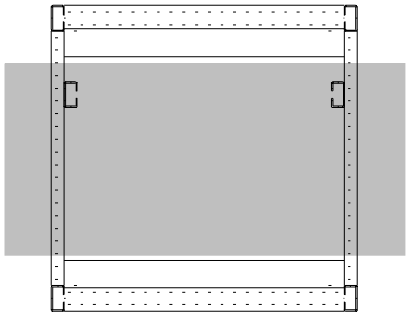

The supporting structure on a cable duct

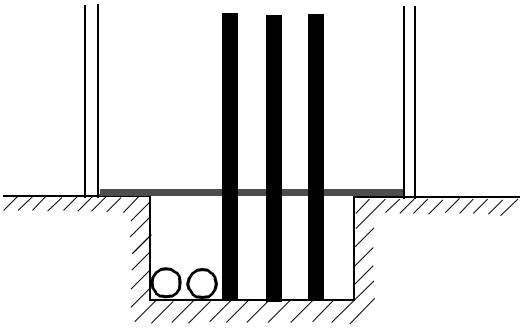

Cabinet side view with a bottom plate

Cabinet heating elements

Use a heater if there is a risk of condensation in the cabinet. Although the primary function of the heater is to keep the air dry, it may also be required for heating at low temperatures.

Attaching the control panel on the cabinet door

You can use a mounting platform to attach the control panel on the cabinet door. Mounting platforms for control panels are available as options from ABB. For more information, see:

Manual	Code (English)
DPMP-01 mounting platform for control panels installation guide	3AUA0000100140
DPMP-02/03 mounting platform for control panels installation guide	3AUA0000136205
DPMP-04/05 mounting platform for control panels installation guide	3AXD50000308484

		
DPMP-01	DPMP-02	DPMP-04/05

5

Guidelines for planning the mechanical installation

Contents of this chapter

This chapter guides in planning drive cabinets and installing the drive module into a user-defined cabinet. The chapter gives cabinet layout examples and free space requirements around the module for cooling. These drive-specific guidelines are essential for the safe and trouble-free use of the drive system.

Installation positions of the drive module

The drive module must be installed in an upright bookshelf position in a cabinet.

Layout example, door closed

This diagram shows a cabinet layout example with the input power cable entry from top and the motor cable entry from bottom.

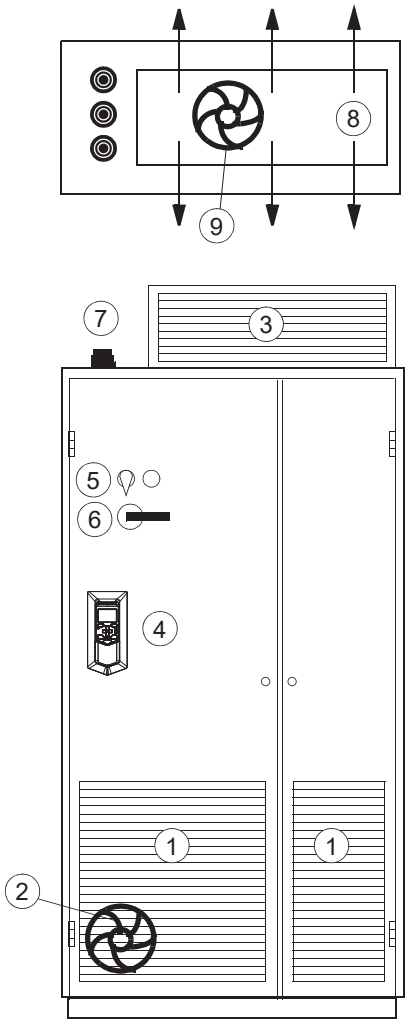

1	Air inlet for the drive module	6	Operating handle of the disconnector
2	An extra fan is not necessary if an extra air baffle is used on the cabinet roof (see the following layout examples)	7	Rubber grommets for degree of protection
3	Air outlet for the drive module and LCL filter module and other equipment on the cabinet roof. An exhaust fan if needed.	8	Roof air flow viewed from top
4	Drive control panel with DPMP-01 mounting platform. The control panel is connected to the drive module control unit inside the cabinet.	9	Fan required for IP20, IP42 or IP54 air outlet kit, has to be ordered separately. See Cooling fans (Page 167).
5	Contactor control switch and emergency stop switch (connected to the contactor control circuit inside the cabinet)	-	
Note: The sizes of the air inlet and outlet gratings are critical for proper cooling of the drive module. For losses and cooling data requirements, see the technical data.			

Layout example, door open (standard drive module configuration)

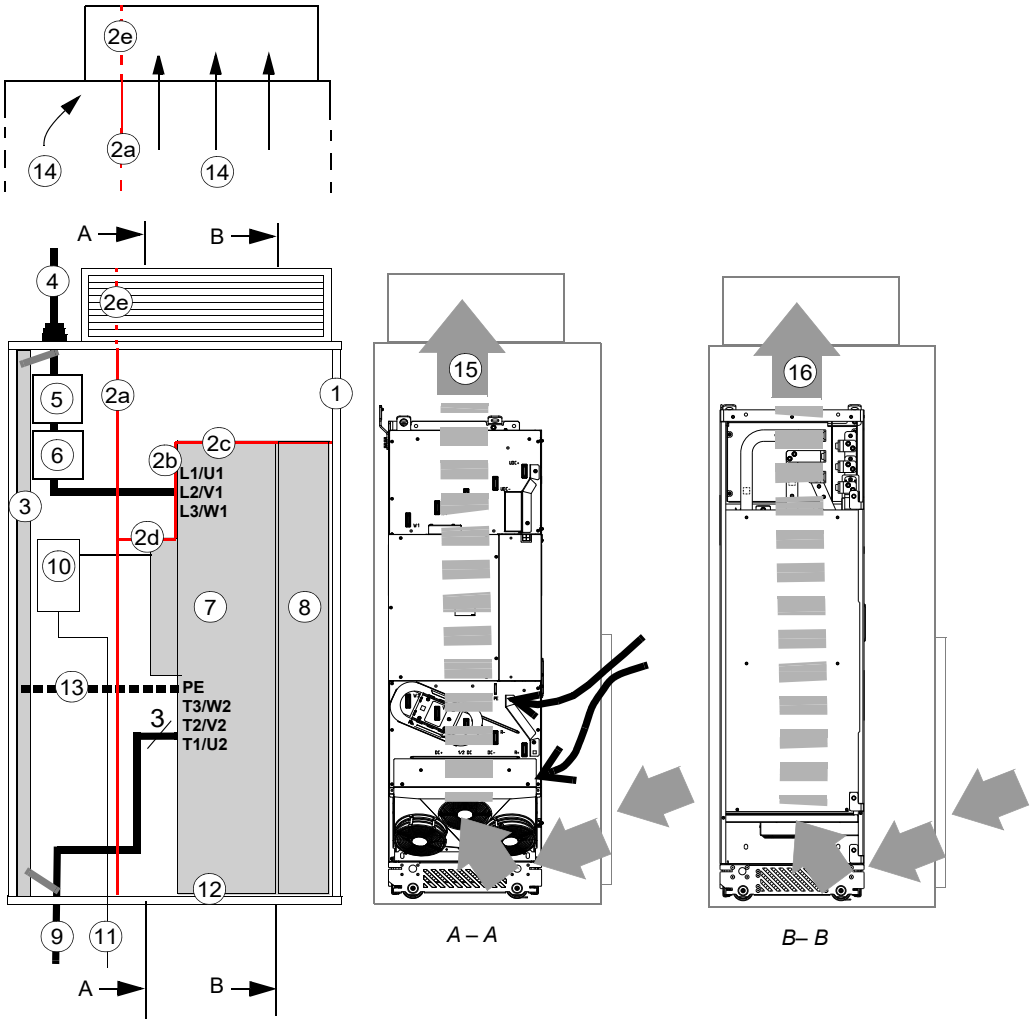

1	Supporting frame of the cabinet	9	Motor cable including the protective ground conductor of the drive module
2	Vertical (2a, 2b) and horizontal (2c, 2d) air baffles that separate the cool and hot areas (leak-proof lead-throughs). See section Preventing the recirculation of hot air (Page 57).	10	Drive module control unit. **Note:** The upper door air inlet is critical for proper cooling of the control unit.
2e	Optional air baffle that is needed when there is no fan on the lower part of the cabinet door. See section Preventing the recirculation of hot air (Page 57).	11	External control cables
3	Cabinet grounding busbar (PE)	12	Grounding screws
4	Input power cable including the protective ground conductor (PE) of the drive	13	Alternative to grounding screws (12)
5	Disconnector and fuses	14	Air flow to the roof
6	Contactor	15	Air flow through the drive module
7	Drive module	16	Air flow through the LCL filter
8	LCL filter module	-	-
Note: The power cable shields can also be grounded to the drive module grounding terminals.			

Note: See also section Required free space (Page 60).

Layout example, door open (option +B051)

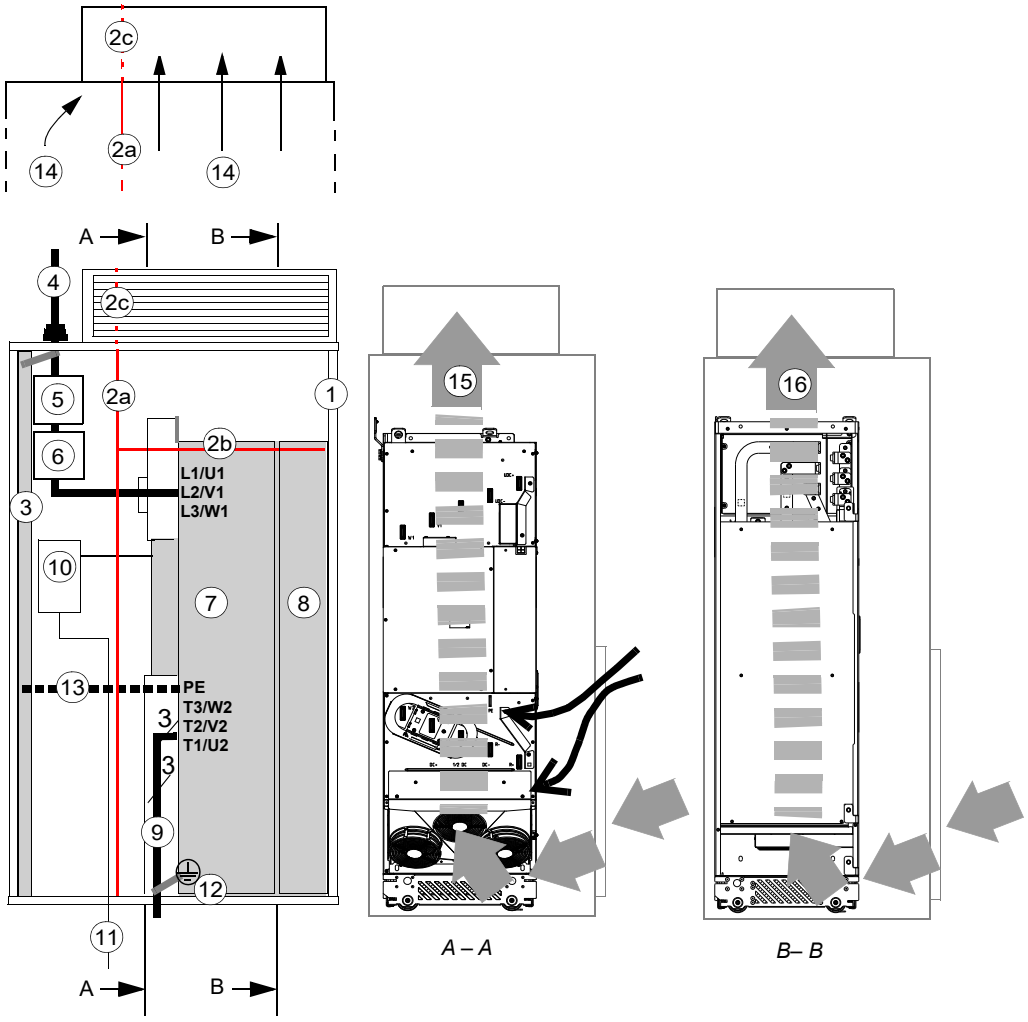

1	Supporting frame of the cabinet	8	LCL filter module
2a	Vertical (2a) and horizontal (2b) air baffles that separate the cool and hot areas (leakproof entries). See section Preventing the recirculation of hot air (Page 57).	9	Motor cable including the protective ground conductor of the drive module
2b		10	Drive module control unit. **Note:** The upper door air inlet is critical for proper cooling of the control unit.
2c	Optional air baffle that is needed when there is no fan on the lower part of the cabinet door. See section Preventing the recirculation of hot air (Page 57).	11	External control cables
3	Cabinet grounding busbar (PE)	12	Grounding screws
4	Input power cable including the protective ground conductor (PE) of the drive	13	Alternative to grounding screws (12)
5	Disconnector and fuses	14	Air flow to the roof
6	Contactor	15	Air flow through the drive module
7	Drive module	16	Air flow through the LCL filter

Cooling solutions

The drawing below shows typical cabinet cooling solutions. The air inlet is at the bottom of the cabinet, while the outlet is on the roof or on the upper part of the door. Use extra exhaust fans if the air outlet is on the cabinet door, see the technical data for the required cooling air flow.

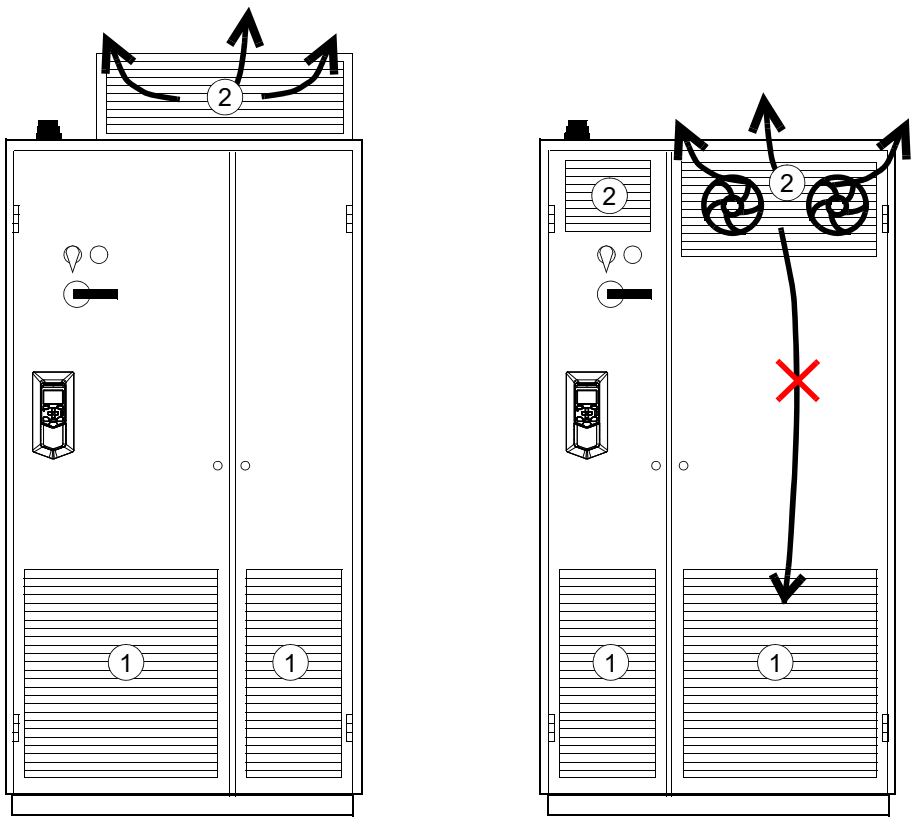

1	Air inlet
2	Air outlet

Preventing the recirculation of hot air

Bookshelf mounting (standard drive module configuration)

This diagram shows air baffle positions inside an example cabinet. For the descriptions, see the next page.

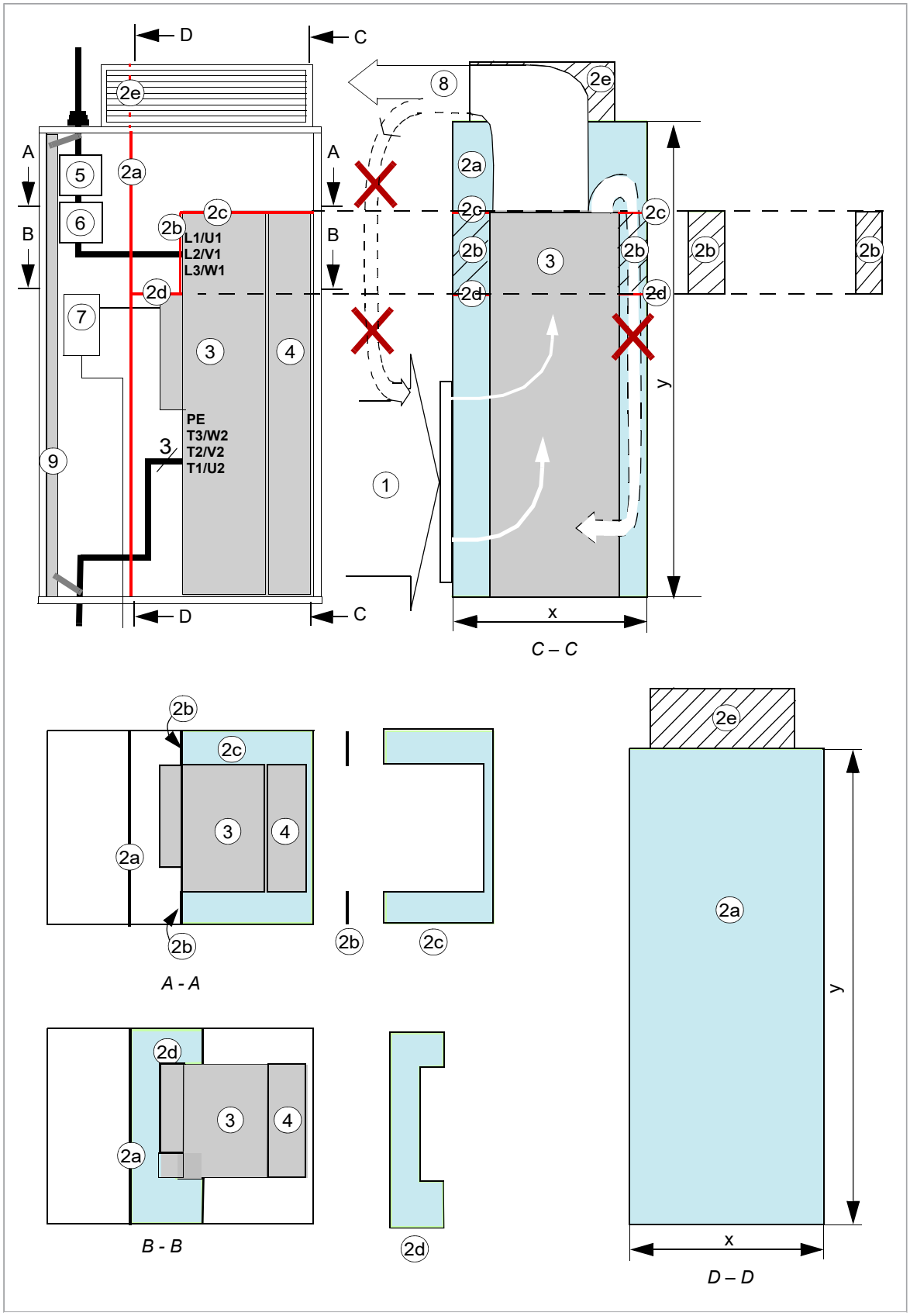

1	Air flow to the drive modules, max. 40 °C (104 °F)	4	LCL filter module
2a	Vertical air baffle that separates the cool and hot areas in the cabinet	5	Disconnector and fuses
2b	Vertical air baffle	6	Contactor
2c	Upper horizontal air baffle	7	Drive control unit
2d	Lower horizontal air baffle	8	Air flow out
2e	Optional air baffle that is needed when there is no fan on the lower part of the cabinet door	9	Cabinet grounding busbar (PE)
3	Drive module	-	-

Bookshelf mounting (option +B051)

This diagram shows the air baffle position inside an example cabinet. For dimensions of the baffle, see the dimension drawings.

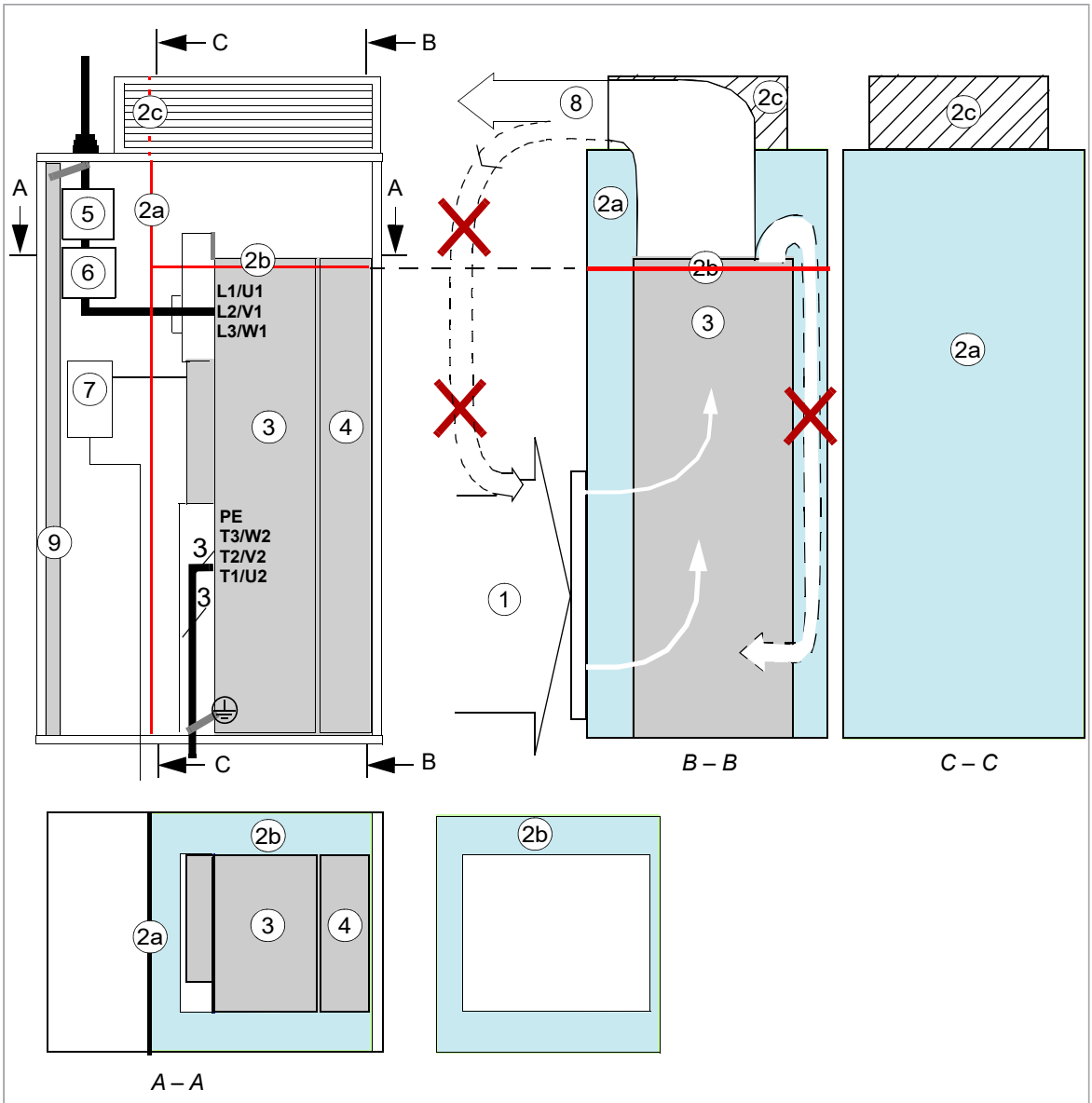

1	Air flow to the drive modules, max. 40 °C (104 °F)	5	Disconnector and fuses
2a	Vertical air baffle that separates the cool and hot areas in the cabinet	6	Contactor
2b	Horizontal air baffle	7	Drive control unit
2c	Optional air baffle that is needed when there is no fan on the lower part of the cabinet door	8	Air flow out
3	Drive module	9	Cabinet grounding busbar (PE)
4	LCL filter module	-	-

Required free space

Free space around the drive module is needed for ensuring that sufficient cooling air flows through the module and the module cools correctly.

Free space at the top of the drive module

The required free space at the top of the drive module is shown below.

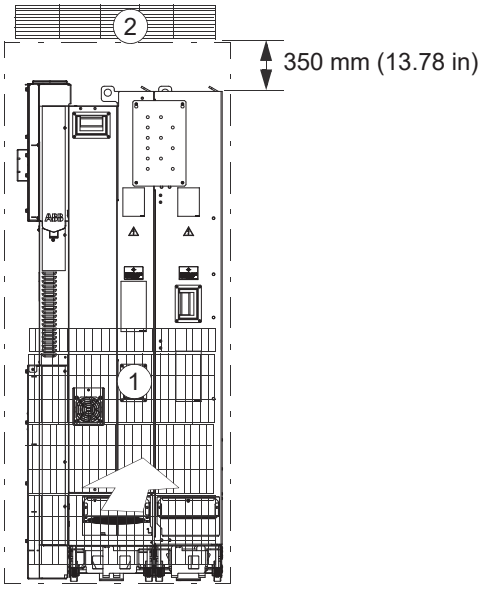

1	Air inlet
2	Air outlet

Free space around the drive module

A free space of 10 mm (0.39 in) around the drive module is required from the cabinet back panel and front door. No free space for cooling is required on the left- and right-hand sides of the module.

The module can be installed in a cabinet with the following dimensions:

- width 800 mm (31.50 in)
- depth 600 mm (23.62 in)
- height 2000 mm (78.74 in).

ABB air inlet and outlet kits

See chapter Ordering information (Page 163).

6

Mechanical installation

Contents of this chapter

This chapter describes alternatives of the mechanical installation of the drive module. It refers to the installation example chapters which contain instructions that depend on the selected drive configuration.

Examining the installation site

The material below the drive must be non-flammable and strong enough to carry the weight of the drive.

See section Ambient conditions (Page 184) for the allowed ambient conditions and section Losses, cooling data and noise (Page 180) for the required cooling air.

Moving and unpacking



WARNING!
Obey the safety instructions of the drive. If you ignore them, injury or death, or damage to the equipment can occur.

Move the transport package by pallet truck to the installation site.

To unpack the package:

- Cut the straps.
- Lift the lid.
- Lift the sleeve.
- Unpack the top boxes (drive module package).
- Insert lifting hooks to the drive and LCL filter module lifting lugs and lift the modules to the installation place.

Package drawings

Drive module package

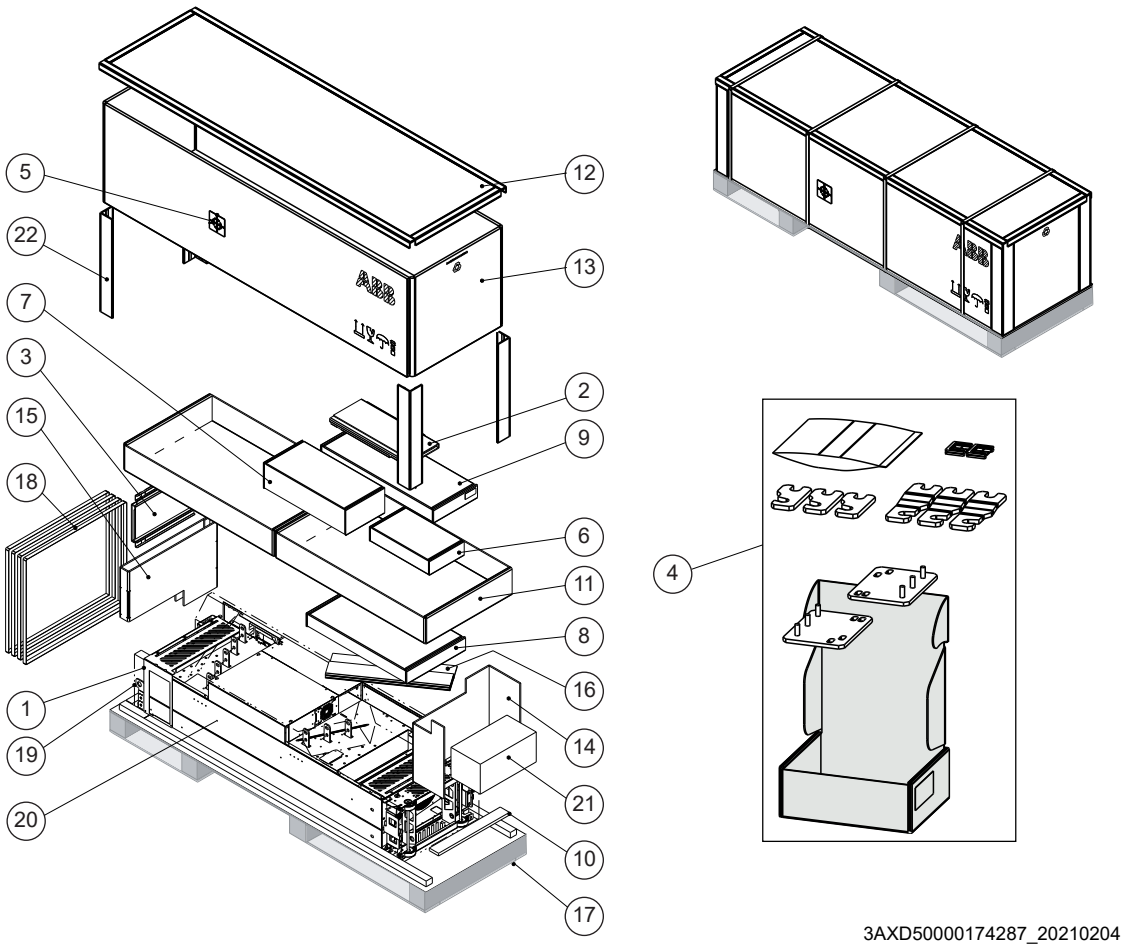

Transport package contents	
1	Finger guard
2	Pedestal guide plate for the LCL filter module
3	Pedestal guide plate for the drive module
4	Accessories box See the box contents on the following pages.
5	Center of gravity symbol
6	Package for LCL filter fan
7	Package for LCL filter pedestal
8	Telescopic extraction/installation ramp
9	Package for option +H370: Full-size input power cable connection terminals and PE busbar.
10	Plywood support
11	With option +B051: Clear plastic shrouds box and output cable connection terminals box. With option +H370: Also input cable connection terminals box.
12	Lid for sleeve
13	Cardboard sleeve
14–16	Cardboard support
17	Pallet

18	Strap
19	VCI film or bag
20	Drive module with factory installed options and multilingual residual voltage warning sticker, fastening screws in a plastic bag, integrated control unit, control panel and cable or control panel with door mounting kit (option +J410), delivery documents, printed multilingual quick installation and start-up guide.
21	External control unit(option +P906)
22	Edgeboard supports

Boxes

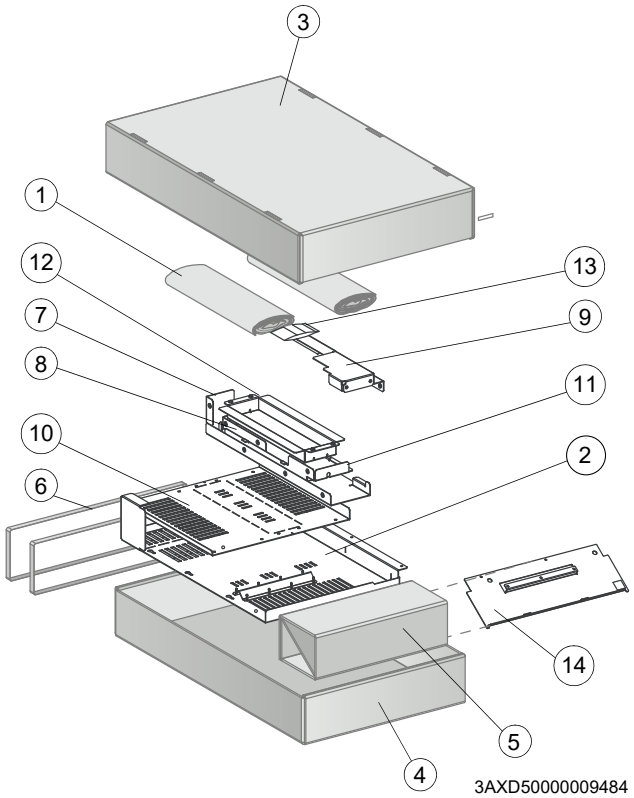

Shroud box (option +B051)	
1	Paper fill
2	Clear plastic shroud for output cabling
3	Cardboard box cover
4	Cardboard box bottom
5	Support
6	Bands
7	Back clear plastic shroud (lower)
8	Back clear plastic shroud (upper)
9	Front clear plastic shroud
10	Clear plastic shroud for input cabling
11	Top clear plastic shroud
12	Clear plastic shroud for input cable entry from side
13	Screws in a plastic bag
14	Metallic shroud without ground bar

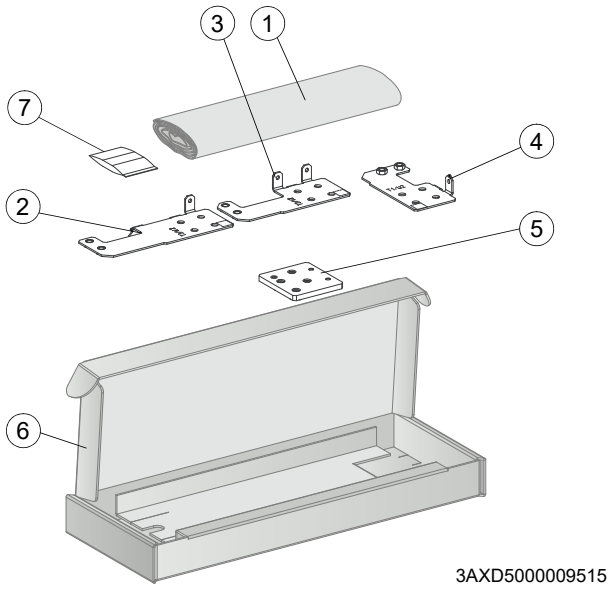

Output connection terminals box with standard drive module configuration	
1	Paper fill
2	Output cable connection terminal T3/W2
3	Output cable connection terminal T2/V2
4	Output cable connection terminal T1/U2
5	Grounding terminal
6	Cardboard box
7	Screws and insulators in a plastic bag

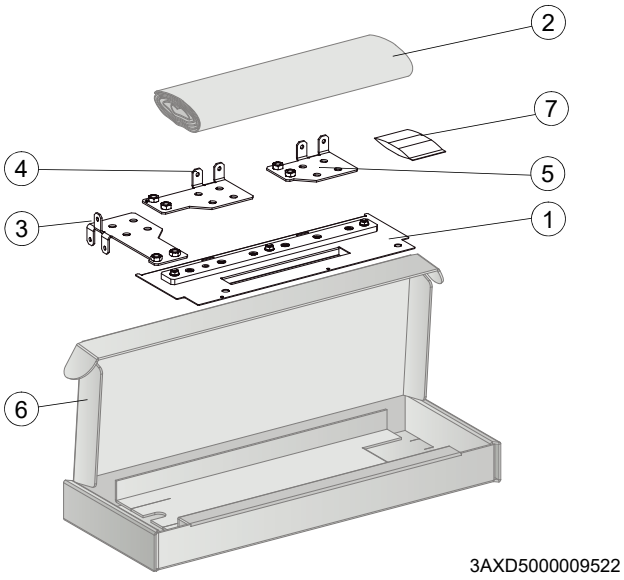

Option +H370: input cable connection terminals box	
1	Metallic shroud with ground bar
2	Paper fill
3	Input cable connection terminal L3/W1
4	Input cable connection terminal L2/V1
5	Input cable connection terminal L1/U1
6	Cardboard box
7	Screws and insulators in a plastic bag

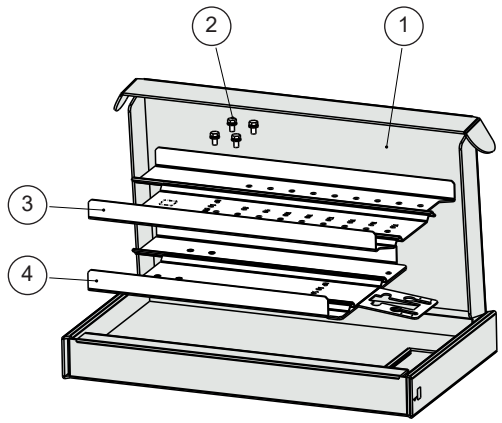

3AXD50000476145

Ramp box	
1	Cardboard box
2	Combi screws (4 pcs)
3	Ramp extension (50 to 150 mm)
4	Ramp up to 50 mm

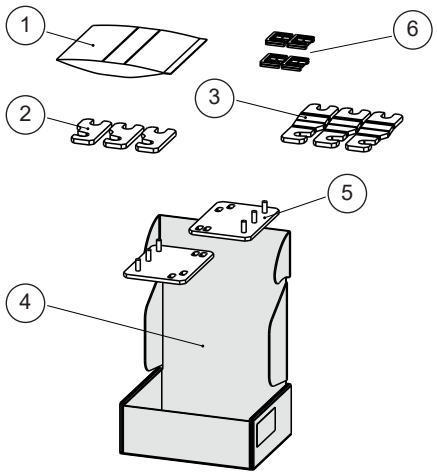

3AXD50000477104

Accessories box	
1	Screw package
2	Busbar for main contactor - LCL connection (3 pcs)
3	Busbar for IGBT - LCL connection (3 pcs)
4	Cardboard box
5	Installation bracket (2 pcs)
6	Feed-through (4 pcs)

LCL filter module package

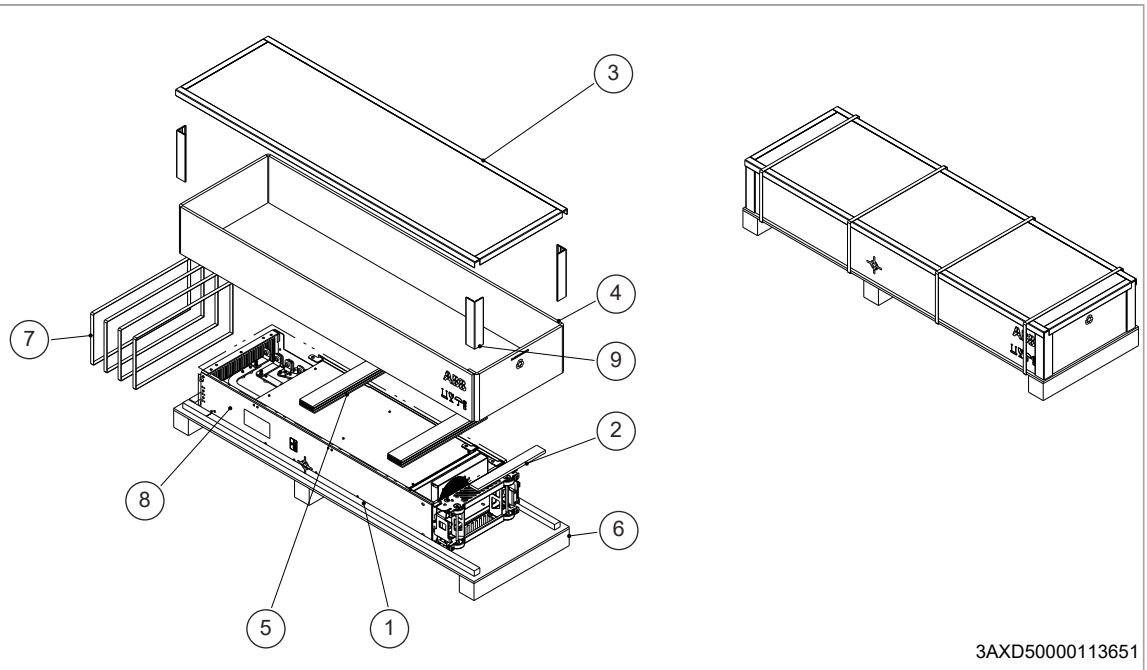

1	VCI bag
2	Plywood support
3	Lid for cardboard sleeve
4	Cardboard sleeve
5	Cardboard support
6	Pallet
7	Strap
8	LCL filter module
9	Edgeboard supports

Examining the delivery

Make sure that all items listed in Moving and unpacking (Page 63) are present.

Make sure that there are no signs of damage. Before attempting installation and operation, examine the information on the type designation label of the drive to verify that the unit is of the correct type.

Lifting

Lift the drive module only by the lifting lugs.

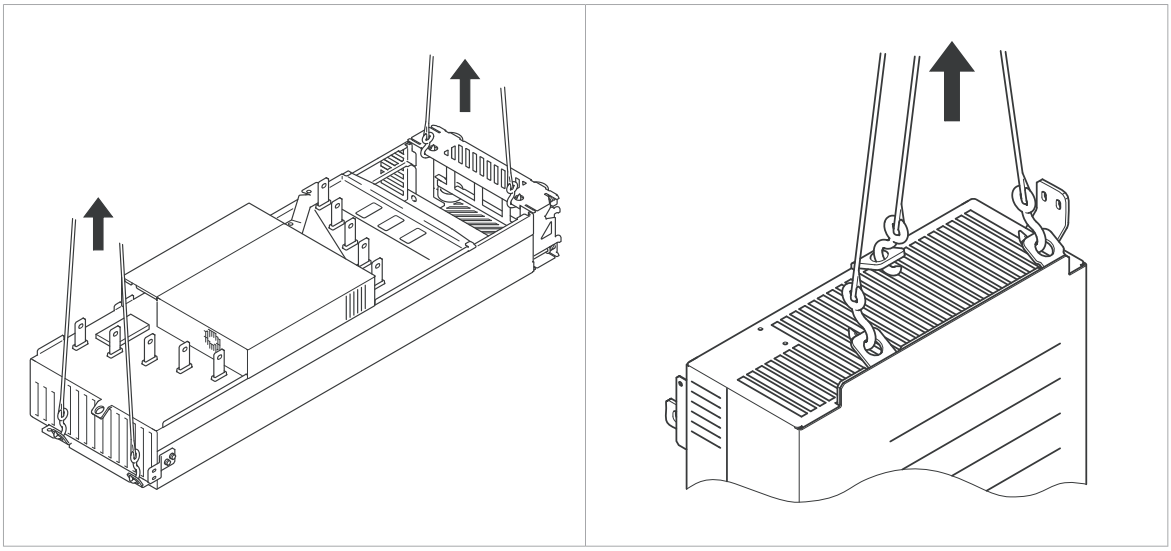

Attaching the drive module and LCL filter module to a mounting plate or wall

Attach the LCL filter module and the drive module to wall or a mounting plate at the points shown below.

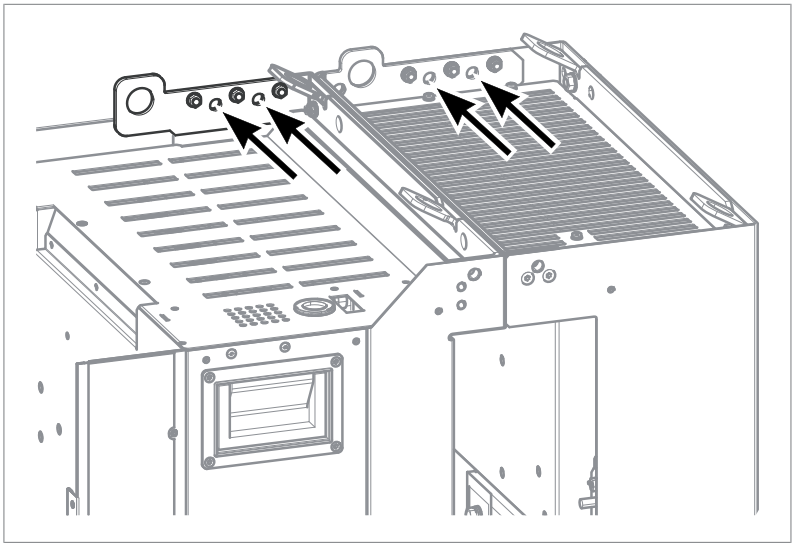

You can attach the modules to Rittal VX25 enclosure with the mounting brackets delivered with the drive, see Step-by-step drawings for an installation example in Rittal VX25 800 mm wide enclosure (Page 259).

Attaching the drive module to the LCL filter module

See Step-by-step drawings for an installation example in Rittal VX25 800 mm wide enclosure (Page 259).

Attaching the drive module and the LCL filter module to the enclosure base

See Step-by-step drawings for an installation example in Rittal VX25 800 mm wide enclosure (Page 259).

Grounding the drive module and the LCL filter module

Ground the drive module and the LCL filter module from the fastening points:

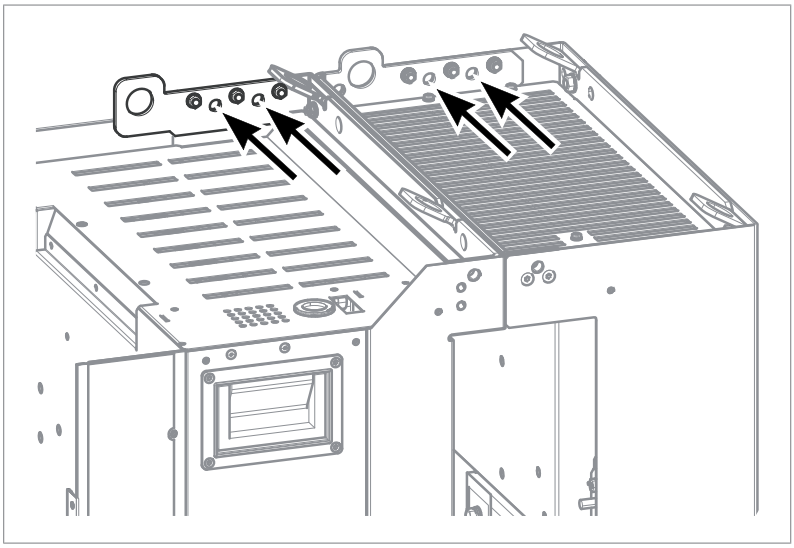

Installing the drive in Rittal VX25 enclosure

For an installation example on how to install the drive module into a Rittal VX25 enclosure, see Installation into a Rittal VX25 enclosure (Page 135) and Step-by-step drawings for an installation example in Rittal VX25 800 mm wide enclosure (Page 259).

Optional input power cable connection terminals and ground busbar assembly (+H370)

Install the metallic shroud with ground bar as shown below.

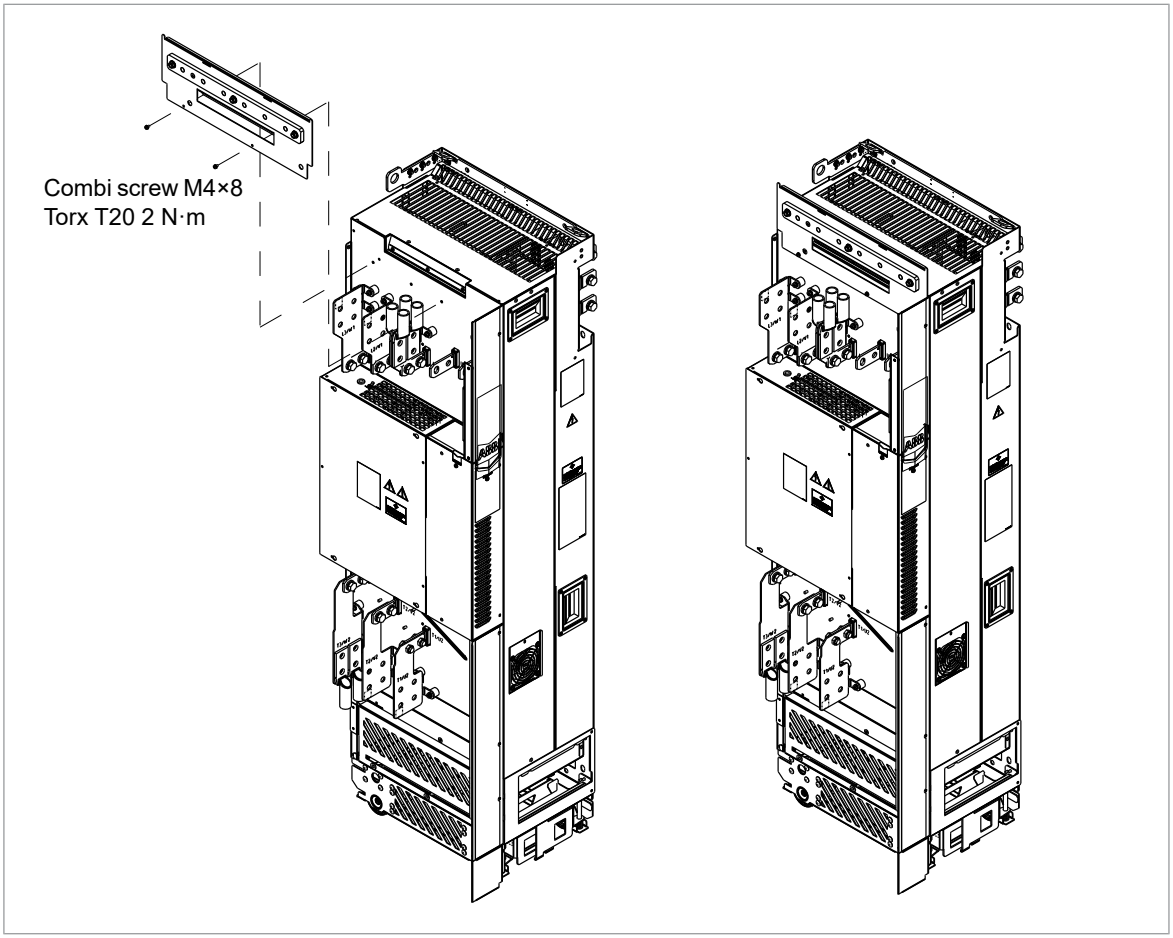

Connect the input power cable connection terminals as shown in Step-by-step drawings for an installation example in Rittal VX25 800 mm wide enclosure (Page 259).

7

Guidelines for planning the electrical installation

Contents of this chapter

This chapter contains guidelines for planning the electrical installation of the drive.

The installation must always be designed and made according to applicable local laws and regulations. ABB does not assume any liability whatsoever for any installation which breaches the local laws and/or other regulations. Furthermore, if the recommendations given by ABB are not followed, the drive may experience problems that the warranty does not cover.

North America

Installations must be compliant with NFPA 70 (NEC)[1)] and/or Canadian Electrical Code (CE) along with state and local codes for your location and application.

[1)] National Fire Protection Association 70 (National Electric Code).

Selecting the main supply disconnecting device

You must equip the drive with a main supply disconnecting device which meets the local safety regulations. You must be able to lock the disconnecting device to the open position for installation and maintenance work.

To comply with European Union directives and United Kingdom regulations related to standard EN 60204-1, the disconnecting device must be one of these types:

- switch-disconnector of utilization category AC-23B (IEC 60947-3)
- disconnector that has an auxiliary contact that in all cases causes switching devices to break the load circuit before the opening of the main contacts of the disconnector (EN 60947-3)
- circuit-breaker suitable for isolation in accordance with IEC 60947-2.

Selecting the main contactor

You can equip the drive with a main contactor.

Follow these guidelines when you select a customer-defined main contactor:

- Dimension the contactor according to the nominal voltage and current of the drive. Also consider the environmental conditions such as surrounding air temperature.
- IEC installations: Select contactor with utilization category AC-1 (number of operations under load) according to IEC 60947-4.
- Consider the application life time requirements.

Examining the compatibility of the motor and drive

Use asynchronous AC induction motors, permanent magnet synchronous motors or ABB synchronous reluctance motors (SynRM motors) with the drive.

Select the motor size and drive type from the rating table on basis of the AC line voltage and motor load. You can find the rating table in the appropriate hardware manual. You can also use the DriveSize PC tool.

Make sure that the motor can be used with an AC drive. See Requirements tables (Page 75). For basics of protecting the motor insulation and bearings in drive systems, see Protecting the motor insulation and bearings (Page 74).

Note:

- Consult the motor manufacturer before using a motor with nominal voltage that differs from the AC line voltage connected to the drive input.
- The voltage peaks at the motor terminals are relative to the supply voltage of the drive, not to the drive output voltage.

Protecting the motor insulation and bearings

The drive employs modern IGBT inverter technology. Regardless of frequency, the drive output comprises pulses of approximately the drive DC bus voltage with a very short rise time. The pulse voltage can almost double at the motor terminals, depending on the attenuation and reflection properties of the motor cable and the terminals. This can cause additional stress on the motor and motor cable insulation.

Modern variable speed drives with their fast rising voltage pulses and high switching frequencies can generate current pulses that flow through the motor bearings. This can gradually erode the bearing races and rolling elements.

d*u*/d*t* filters protect motor insulation system and reduce bearing currents. Common mode filters mainly reduce bearing currents. Insulated N-end (non-drive end) bearings protect the motor bearings.

Requirements tables

These tables show how to select the motor insulation system and when a drive d*u*/d*t* and common mode filters and insulated N-end (non-drive end) motor bearings are required. Ignoring the requirements or improper installation may shorten motor life or damage the motor bearings and voids the warranty.

Requirements for ABB motors, P_n < 100 kW (134 hp)

See also Abbreviations (Page 78).

Motor type	Nominal AC line voltage	Requirement for	
		Motor insulation system	ABB d*u*/d*t* and common mode filters, insulated N-end motor bearings
			P_n < 100 kW and frame size < IEC 315
			P_n < 134 hp and frame size < NEMA 500
Random-wound M2_, M3_ and M4_	U_n ≤ 500 V	Standard	-
	500 V < U_n ≤ 600 V	Standard	+ d*u*/d*t*
		Reinforced	-
	600 V < U_n ≤ 690 V (cable length ≤ 150 m)	Reinforced	+ d*u*/d*t*
	600 V < U_n ≤ 690 V (cable length > 150 m)	Reinforced	-
Form-wound HX_ and AM_	380 V < U_n ≤ 690 V	Standard	N/A
Old [1] form-wound HX_ and modular	380 V < U_n ≤ 690 V	Check with the motor manufacturer.	+ N + d*u*/d*t* with voltages over 500 V + CMF
Random-wound HX_ and AM_ [2]	0 V < U_n ≤ 500 V	Enamelled wire with fiber glass taping	+ N + CMF
	500 V < U_n ≤ 690 V		+ N + d*u*/d*t* + CMF
HDP	Consult the motor manufacturer.		

[1] manufactured before 1.1.1998

[2] For motors manufactured before 1.1.1998, check for additional instructions with the motor manufacturer.

Requirements for ABB motors, $P_n \geq 100$ kW (134 hp)

See also Abbreviations (Page 78).

Motor type	Nominal AC line voltage	Requirement for		
		Motor insulation system	ABB du/dt and common mode filters, insulated N-end motor bearings	
			100 kW ≤ P_n < 350 kW or IEC 315 ≤ frame size < IEC 400	P_n ≥ 350 kW or frame size ≥ IEC 400
			134 hp ≤ P_n < 469 hp or NEMA 500 ≤ frame size ≤ NEMA 580	P_n ≥ 469 hp or frame size > NEMA 580
Random-wound M2_, M3_ and M4_	U_n ≤ 500 V	Standard	+ N	+ N + CMF
	500 V < U_n ≤ 600 V	Standard	+ N + du/dt	+ N + du/dt + CMF
		Reinforced	+ N	+ N + CMF
	600 V < U_n ≤ 690 V (cable length ≤ 150 m)	Reinforced	+ N + du/dt	+ N + du/dt + CMF
	600 V < U_n ≤ 690 V (cable length > 150 m)	Reinforced	+ N	+ N + CMF
Form-wound HX_ and AM_	380 V < U_n ≤ 690 V	Standard	+ N + CMF	P_n < 500 kW: +N + CMF
				P_n ≥ 500 kW: +N + du/dt + CMF
Old[1] form-wound HX_ and modular	380 V < U_n ≤ 690 V	Check with the motor manufacturer.	+ N + du/dt with voltages over 500 V + CMF	
Random-wound HX_ and AM_ [2]	0 V < U_n ≤ 500 V	Enamelled wire with fiber glass taping	+ N + CMF	
	500 V < U_n ≤ 690 V		+ N + du/dt + CMF	
HDP	Consult the motor manufacturer.			

1) manufactured before 1.1.1998
2) For motors manufactured before 1.1.1998, check for additional instructions with the motor manufacturer.

Requirements for non-ABB motors, P_n < 100 kW (134 hp)

See also Abbreviations (Page 78).

Motor type	Nominal AC line voltage	Requirement for	
		Motor insulation system	ABB du/dt and common mode filters, insulated N-end motor bearings
			P_n < 100 kW and frame size < IEC 315
			P_n < 134 hp and frame size < NEMA 500
Random-wound and form-wound	U_n ≤ 420 V	Standard: $\hat{U}_{LL}$ = 1300 V	-
	420 V < U_n ≤ 500 V	Standard: $\hat{U}_{LL}$ = 1300 V	+ du/dt
		Reinforced: $\hat{U}_{LL}$ = 1600 V, 0.2 µs rise time	-
	500 V < U_n ≤ 600 V	Reinforced: $\hat{U}_{LL}$ = 1600 V	+ du/dt
		Reinforced: $\hat{U}_{LL}$ = 1800 V	-
	600 V < U_n ≤ 690 V	Reinforced: $\hat{U}_{LL}$ = 1800 V	+ du/dt
		Reinforced: $\hat{U}_{LL}$ = 2000 V, 0.3 µs rise time [1)]	-

1) If the intermediate DC circuit voltage of the drive is increased from the nominal level due to long term resistor braking cycles, check with the motor manufacturer if additional output filters are needed.

Requirements for non-ABB motors, $P_n \geq 100$ kW (134 hp)

See also Abbreviations (Page 78).

Motor type	Nominal AC line voltage	Requirement for		
		Motor insulation system	ABB du/dt and common mode filters, insulated N-end motor bearings	
			100 kW ≤ P_n < 350 kW or IEC 315 ≤ frame size < IEC 400	P_n ≥ 350 kW or frame size ≥ IEC 400
			134 hp ≤ P_n < 469 hp or NEMA 500 ≤ frame size ≤ NEMA 580	P_n ≥ 469 hp or frame size > NEMA 580
Random-wound and form-wound	$U_n \leq 420$ V	Standard: $\hat{U}_{LL}$ = 1300 V	+ N or CMF	+ N + CMF
	420 V < $U_n \leq 500$ V	Standard: $\hat{U}_{LL}$ = 1300 V	+ du/dt + (N or CMF)	+ N + du/dt + CMF
		Reinforced: $\hat{U}_{LL}$ = 1600 V, 0.2 µs rise time	+ N or CMF	+ N + CMF
	500 V < $U_n \leq 600$ V	Reinforced: $\hat{U}_{LL}$ = 1600 V	+ du/dt + (N or CMF)	+ N + du/dt + CMF
		Reinforced: $\hat{U}_{LL}$ = 1800 V	+ N or CMF	+ N + CMF
	600 V < $U_n \leq 690$ V	Reinforced: $\hat{U}_{LL}$ = 1800 V	+ du/dt + N	+ N + du/dt + CMF
		Reinforced: $\hat{U}_{LL}$ = 2000 V, 0.3 µs rise time[1)]	+ N + CMF	+ N + CMF

1) If the intermediate DC circuit voltage of the drive is increased from the nominal level due to long term resistor braking cycles, check with the motor manufacturer if additional output filters are needed.

Abbreviations

Abbr.	Definition
U_n	Nominal AC line voltage
$\hat{U}_{LL}$	Peak line-to-line voltage at motor terminals which the motor insulation must withstand
P_n	Motor nominal power
du/dt	du/dt filter at the output of the drive
CMF	Common mode filter of the drive
N	N-end bearing: insulated motor non-drive end bearing
n.a.	Motors of this power range are not available as standard units. Consult the motor manufacturer.

Availability of d*u*/d*t* filter and common mode filter by drive type

Product type	Availability of du/dt filter	Availability of common mode filter (CMF)
ACH580-34	Ordered separately, see chapter Filters (Page 233)	Standard

Additional requirements for explosion-safe (EX) motors

If you use an explosion-safe (EX) motor, obey the rules in the requirements table above. In addition, consult the motor manufacturer for any further requirements.

Additional requirements for ABB motors of types other than M2_, M3_, M4_, HX_ and AM_

Use the selection criteria given for non-ABB motors.

Additional requirements for the regenerative and low harmonics drives

It is possible to increase the intermediate circuit DC voltage from the nominal (standard) level with a parameter in the control program. If you choose to do this, select the motor insulation system which withstands the increased DC voltage level.

Additional requirements for ABB high-output and IP23 motors

The rated output power of high output motors is higher than what is stated for the particular frame size in EN 50347 (2001).

This table shows the requirements for protecting the motor insulation and bearings in drive systems for ABB random-wound motor series (for example, M3AA, M3AP and M3BP).

Nominal AC supply voltage	Requirement for			
	Motor insulation system	ABB d*u*/d*t* and common mode filters, insulated N-end motor bearings		
		P_n < 100 kW	100 kW ≤ P_n < 200 kW	P_n ≥ 200 kW
		P_n < 140 hp	140 hp ≤ P_n < 268 hp	P_n ≥ 268 hp
U_n ≤ 500 V	Standard	-	+ N	+ N + CMF
500 V < U_n ≤ 600 V	Standard	+ d*u*/d*t*	+ d*u*/d*t* + N	+ d*u*/d*t* + N + CMF
	Reinforced	-	+ N	+ N + CMF
600 V < U_n ≤ 690 V	Reinforced	+ d*u*/d*t*	+ d*u*/d*t* + N	+ d*u*/d*t* + N + CMF

Additional requirements for non-ABB high-output and IP23 motors

The rated output power of high-output motors is higher than what is stated for the particular frame size in EN 50347 (2001).

If you plan to use a non-ABB high-output motor or an IP23 motor, consider these additional requirements for protecting the motor insulation and bearings in drive systems:

- If motor power is below 350 kW: Equip the drive and/or motor with the filters and/or bearings according to the table below.
- If motor power is above 350 kW: Consult the motor manufacturer.

Nominal AC supply voltage	Requirement for		
	Motor insulation system	ABB du/dt and common mode filters, insulated N-end motor bearings	
		P_n < 100 kW or frame size < IEC 315	100 kW < P_n < 350 kW or IEC 315 < frame size < IEC 400
		P_n < 134 hp or frame size < NEMA 500	134 hp < P_n < 469 hp or NEMA 500 < frame size < NEMA 580
U_n ≤ 420 V	Standard: $\hat{U}_{LL}$ = 1300 V	+ N or CMF	+ N or CMF
420 V < U_n < 500 V	Standard: $\hat{U}_{LL}$ = 1300 V	+ du/dt + (N or CMF)	+ N + du/dt + CMF
	Reinforced: $\hat{U}_{LL}$ = 1600 V, 0.2 microsecond rise time	+ N or CMF	+ N or CMF
500 V < U_n ≤ 600 V	Reinforced: $\hat{U}_{LL}$ = 1600 V	+ du/dt + (N or CMF)	+ N + du/dt + CMF
	Reinforced: $\hat{U}_{LL}$ = 1800 V	+ N or CMF	+ N + CMF
600 V < U_n ≤ 690 V	Reinforced: $\hat{U}_{LL}$ = 1800 V	+ N + du/dt	+ N + du/dt + CMF
	Reinforced: $\hat{U}_{LL}$ = 2000 V, 0.3 microsecond rise time [1)]	+ N + CMF	+ N + CMF

1) If the intermediate DC circuit voltage of the drive is increased from the nominal level due to long term resistor braking cycles, check with the motor manufacturer if additional output filters are needed.

Additional data for calculating the rise time and the peak line-to-line voltage

The diagrams below show the relative peak line-to-line voltage and rate of change of voltage as a function of the motor cable length. If you need to calculate the actual peak voltage and voltage rise time considering the actual cable length, proceed as follows:

- Peak line-to line voltage: Read the relative $\hat{U}_{LL}/U_n$ value from the diagram below and multiply it by the nominal supply voltage (U_n).
- Voltage rise time: Read the relative values $\hat{U}_{LL}/U_n$ and (du/dt)/U_n from the diagram below. Multiply the values by the nominal supply voltage (U_n) and substitute into equation t = 0.8 · $\hat{U}_{LL}$/(du/dt).

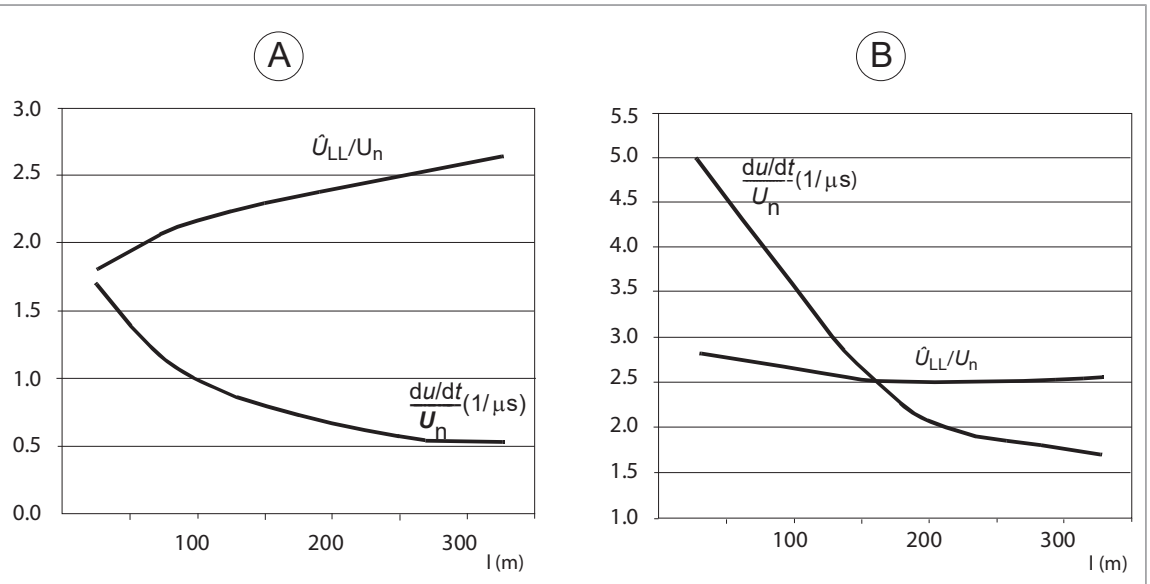

A	Drive with d*u*/d*t* filter
B	Drive without d*u*/d*t* filter
l	Motor cable length
$\hat{U}_{LL}/U_n$	Relative peak line-to-line voltage
(d*u*/d*t*)/U_n	Relative d*u*/d*t* value
Note: $\hat{U}_{LL}$ and d*u*/d*t* values are approximately 20% higher with resistor braking.	

Additional note for sine filters

A sine filter also protects the motor insulation system. The peak phase-to-phase voltage with a sine filter is approximately 1.5 · U_n.

Selecting the power cables

General guidelines

Select the input power and motor cables according to local regulations.

- **Current:** Select a cable capable of carrying the maximum load current and suitable for the prospective short-circuit current provided by the supply network. The method of installation and ambient temperature affect the cable current carrying capacity. Obey local regulations and laws.
- **Temperature:** For an IEC installation, select a cable rated for at least 70 °C (158 °F) maximum permissible temperature of conductor in continuous use.
  For North America, select a cable rated for at least 75 °C (167 °F).
  Important: For certain product types or option configurations higher temperature rating may be required. See the technical data for details.
- **Voltage:** 600 V AC cable is accepted for up to 500 V AC. 750 V AC cable is accepted for up to 600 V AC. 1000 V AC cable is accepted for up to 690 V AC.

To comply with the EMC requirements of the CE mark, use one of the preferred cable types. See Preferred power cable types (Page 82).

Symmetrical shielded cable reduces electromagnetic emission of the whole drive system as well as the stress on motor insulation, bearing currents and wear.

Metal conduit reduces electromagnetic emission of the whole drive system.

Typical power cable sizes

See the technical data.

Power cable types

Preferred power cable types

This section presents the preferred cable types. Make sure that the selected cable type also complies with local/state/country electrical codes.

Cable type	Use as input power cabling	Use as motor cabling and as brake resistor cabling
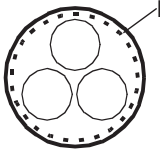 Symmetrical shielded (or armored) cable with three phase conductors and concentric PE conductor as shield (or armor)	Yes	Yes
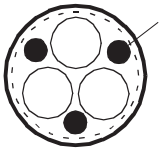 Symmetrical shielded (or armored) cable with three phase conductors and symmetrically constructed PE conductor and a shield (or armor)	Yes	Yes
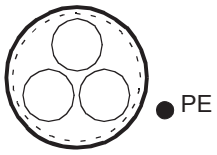 Symmetrical shielded (or armored) cable with three phase conductors and a shield (or armor), and separate PE conductor/cable [1)]	Yes	Yes

1) A separate PE conductor is required if the conductivity of the shield (or armor) is not sufficient for the PE use.

Alternate power cable types

Cable type	Use as input power cabling	Use as motor cabling and as brake resistor cabling
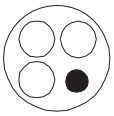 Four-conductor cabling in PVC conduit or jacket (three phase conductors and PE)	Yes with phase conductor smaller than 10 mm^2 (8 AWG) Cu.	Yes with phase conductor smaller than 10 mm^2 (8 AWG) Cu, or motors up to 30 kW (40 hp). **Note:** Shielded or armored cable, or cabling in metal conduit is always recommended to minimize radio frequency interference.

Cable type	Use as input power cabling	Use as motor cabling and as brake resistor cabling
 Four-conductor cabling in metal conduit (three phase conductors and PE). For example, EMT, or four-conductor armored cable	Yes	Yes with phase conductor smaller than 10 mm² (8 AWG) Cu, or motors up to 30 kW (40 hp)
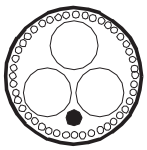 Shielded (Al/Cu shield or armor) [1] four-conductor cable (three phase conductors and a PE)	Yes	Yes with motors up to 100 kW (135 hp). A potential equalization between the frames of motor and driven equipment is required.
 A single-core cable system: three phase conductors and PE conductor on cable tray 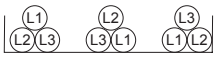 Preferable cable arrangement to avoid voltage or current unbalance between the phases	Yes  **WARNING!** If you use unshielded single-core cables in an IT network, make sure that the non-conductive outer sheath (jacket) of the cables have good contact with a properly grounded conductive surface. For example, install the cables on a properly grounded cable tray. Otherwise voltage may become present on the non-conductive outer sheath of the cables, and there is even a risk of an electric shock.	No

[1] Armor may act as an EMC shield, as long as it provides the same performance as a concentric EMC shield of a shielded cable. To be effective at high frequencies, the shield conductivity must be at least 1/10 of the phase conductor conductivity. The effectiveness of the shield can be evaluated based on the shield inductance, which must be low and only slightly dependent on frequency. The requirements are easily met with a copper or aluminum shield/armor. The cross-section of a steel shield must be ample and the shield helix must have a low gradient. A galvanized steel shield has a better high-frequency conductivity than a non-galvanized steel shield.

Not allowed power cable types

Cable type	Use as input power cabling	Use as motor cabling and as brake resistor cabling
 Symmetrical shielded cable with individual shields for each phase conductor	No	No

Additional guidelines – North America

ABB recommends the use of metallic conduit for power wiring. ABB also recommends the use of symmetrical shielded VFD cable between drive and motor(s).

This table shows examples of methods for wiring the drive. Refer to NFPA 70 (NEC) along with state and local codes for the appropriate methods for your application.

Wiring method	Notes
Conduit - Metallic [1) 2)]	
Electrical metallic tubing: Type EMT	Prefer symmetrical shielded VFD cable. Use separate conduit run for each motor. Do not run input power wiring and motor wiring in the same conduit.
Rigid metal conduit: Type RMC	
Liquid-tight flexible metal electrical conduit: Type LFMC	
Conduit - Non-metallic [2) 3)]	
Liquid-tight flexible non-metallic conduit: Type LFNC	Prefer symmetrical shielded VFD cable. Use separate conduit run for each motor. Do not run input power wiring and motor wiring in the same conduit.
Wireways [2)]	
Metallic	Prefer symmetrical shielded VFD cable. Separate motor wiring from input power wiring and other low voltage wiring. Do not run outputs of multiple drives parallel. Bundle each cable (wiring) together and use separators where possible.
Free air [2)]	
Enclosures, air handlers, etc.	Prefer symmetrical shielded VFD cable. Allowed internally in enclosures when in accordance with UL.

1) Metallic conduit may be used as an additional ground path, provided this path is a solid path capable of handling ground currents.
2) See NFPA NFPA 70 (NEC), UL, and local codes for your application.
3) Non-metallic conduit use underground is allowed; however, these installations inherently have an increased chance for nuisance problems due to the potential for water/moisture in the conduit. Water/moisture in the conduit increases the likelihood of VFD faults or warnings. Proper installation is required to make sure there is no intrusion of water/moisture.

Metal conduit

Couple separate parts of a metal conduit together: bridge the joints with a ground conductor bonded to the conduit on each side of the joint. Also bond the conduits to the drive enclosure and motor frame. Use separate conduits for input power, motor, brake resistor, and control wiring. Do not run motor wiring from more than one drive in the same conduit.

Power cable shield

If the cable shield is used as the sole protective earth (PE) conductor, make sure that its conductivity agrees with the PE conductor requirements.

To effectively suppress radiated and conducted radio-frequency emissions, the cable shield conductivity must be at least 1/10 of the phase conductor conductivity. The requirements are easily met with a copper or aluminum shield. The minimum requirement of the motor cable shield of the drive is shown below. It consists of a

concentric layer of copper wires with an open helix of copper tape or copper wire. The better and tighter the shield, the lower the emission level and bearing currents.

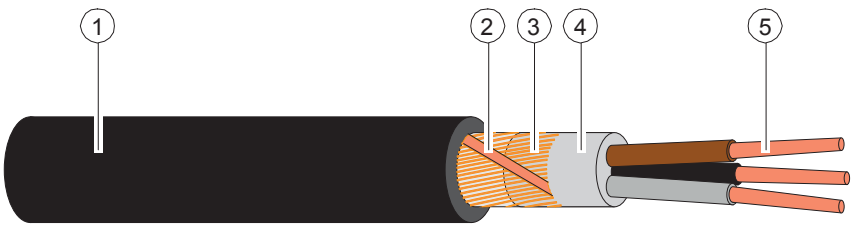

1	Insulation jacket
2	Helix of copper tape or copper wire
3	Copper wire shield
4	Inner insulation
5	Cable core

Grounding requirements

This section gives general requirements for grounding the drive. When you plan the grounding of the drive, obey all the applicable national and local regulations.

The conductivity of the protective earth conductor(s) must be sufficient.

Unless local wiring regulations state otherwise, the cross-sectional area of the protective earth conductor must agree with the conditions that require automatic disconnection of the supply required in 411.3.2 of IEC 60364-4-41:2005 and be capable of withstanding the prospective fault current during the disconnection time of the protective device. The cross-sectional area of the protective earth conductor must be selected from the table below or calculated according to 543.1 of IEC 60364-5-54.

This table shows the minimum cross-sectional area of the protective earth conductor related to the phase conductor size according to IEC/UL 61800-5-1 when the phase conductor(s) and the protective earth conductor are made of the same metal. If this is not so, the cross-sectional area of the protective earth conductor must be determined in a manner which produces a conductance equivalent to that which results from the application of this table.

Cross-sectional area of the phase conductors S (mm^2)	**Minimum cross-sectional area of the corresponding protective earth conductor S_p (mm^2)**
$S \leq 16$	S [1)]
$16 < S \leq 35$	16
$35 < S$	S/2

1) For the minimum conductor size in IEC installations, refer to Additional grounding requirements – IEC.

If the protective earth conductor is not part of the input power cable or input power cable enclosure, the minimum permitted cross-sectional area is:

- 2.5 mm^2 if the conductor is mechanically protected,

or

- 4 mm^2 if the conductor is not mechanically protected. If the equipment is cord-connected, the protective earth conductor must be the last conductor to be interrupted if there is a failure in the strain relief mechanism.

Additional grounding requirements – IEC

This section gives grounding requirements according to standard IEC/EN 61800-5-1.

Because the normal touch current of the drive is more than 3.5 mA AC or 10 mA DC:

- the minimum size of the protective earth conductor must comply with the local safety regulations for high protective earth conductor current equipment, and
- you must use one of these connection methods:
  1. a fixed connection and:
     - a protective earth conductor with a minimum cross-sectional area of 10 mm^2 Cu or 16 mm^2 Al (as an alternative when aluminum cables are permitted),
       or
     - a second protective earth conductor of the same cross-sectional area as the original protective earth conductor,
       or
     - a device that automatically disconnects the supply if the protective earth conductor is damaged.
  2. a connection with an industrial connector according to IEC 60309 and a minimum protective earth conductor cross-section of 2.5 mm^2 as part of a multi-conductor power cable. Sufficient strain relief must be provided.

If the protective earth conductor is routed through a plug and socket, or similar means of disconnection, it must not be possible to disconnect it unless power is simultaneously removed.

Note: You can use power cable shields as grounding conductors only when their conductivity is sufficient.

Additional grounding requirements – UL (NEC)

This section gives grounding requirements according to standard UL 61800-5-1.

The protective earth conductor must be sized as specified in Article 250.122 and table 250.122 of the National Electric Code, ANSI/NFPA 70.

For cord-connected equipment, it must not be possible to disconnect the protective earth conductor before power is removed.

Selecting the control cables

Shielding

Only use shielded control cables.

Use a double-shielded twisted pair cable for analog signals. ABB recommends this type of cable also for the pulse encoder signals. Use one individually shielded pair for each signal. Do not use common return for different analog signals.

A double-shielded cable (a) is the best alternative for low-voltage digital signals, but single-shielded (b) twisted pair cable is also acceptable.

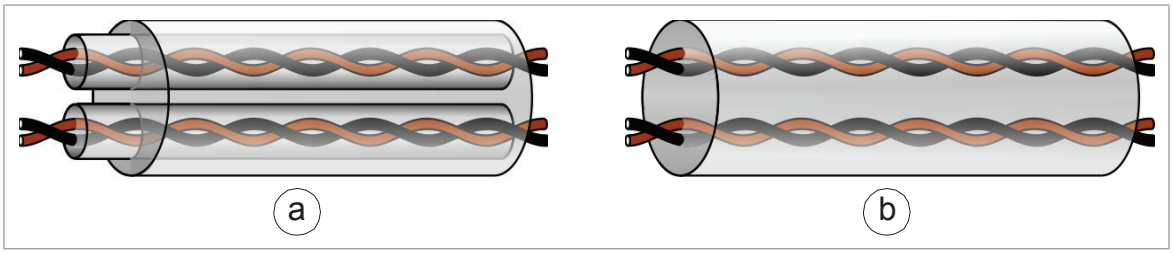

Signals in separate cables

Run analog and digital signals in separate, shielded cables. Do not mix 24 V DC and 115/230 V AC signals in the same cable.

Signals that can be run in the same cable

If their voltage does not exceed 48 V, relay-controlled signals can be run in the same cables as digital input signals. The relay-controlled signals should be run as twisted pairs.

Relay cable

The cable type with braided metallic shield (for example ÖLFLEX by LAPPKABEL, Germany) has been tested and approved by ABB.

Control panel to drive cable

Use EIA-485, Cat 5e (or better) cable with male RJ-45 connectors. The maximum length of the cable is 100 m (328 ft).

PC tool cable

Connect the Drive Composer PC tool to the drive through the USB port of the control panel. Use a USB Type A (PC) - Type Mini-B (control panel) cable. The maximum length of the cable is 3 m (9.8 ft).

Routing the cables

General guidelines – IEC

- Route the motor cable away from other cables. Motor cables of several drives can be run in parallel installed next to each other.
- Install the motor cable, input power cable and control cables on separate trays.
- Avoid long parallel runs of motor cables with other cables.
- Where control cables must cross power cables, make sure that they are arranged at an angle as near to 90 degrees as possible.
- Do not run extra cables through the drive.
- Make sure that the cable trays have good electrical bonding to each other and to the grounding electrodes. Aluminum tray systems can be used to improve local equalizing of potential.

The following figure illustrates the cable routing guidelines with an example drive.

Note: When motor cable is symmetrical and shielded and it has short parallel runs with other cables (< 1.5 m / 5 ft), distances between the motor cable and other cables can be reduced by half.

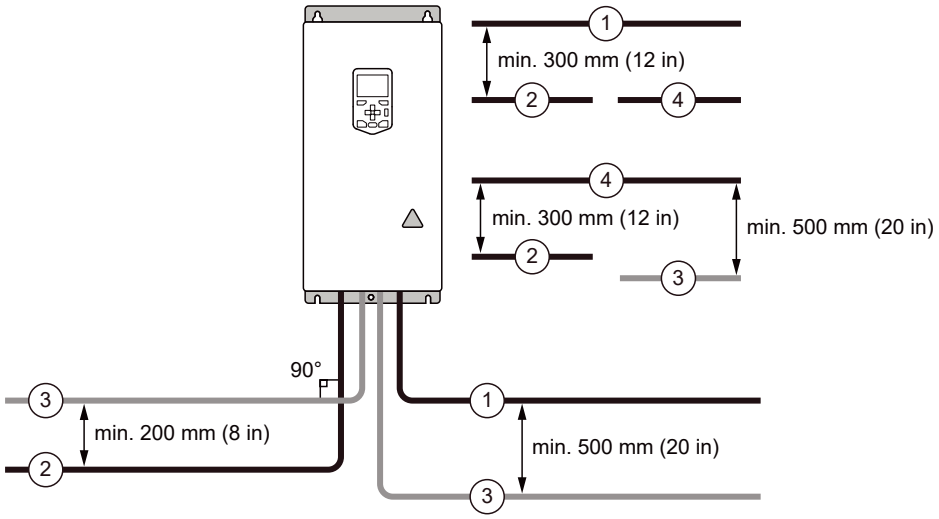

1	Motor cable
2	Input power cable
3	Control cable
4	Brake resistor or chopper cable (if any)

General guidelines – North America

Make sure that the installation is in accordance with national and local codes. Obey these general guidelines:

- Use separate conduits for the input power, motor, brake resistor (optional), and control cabling.
- Use separate conduit for each motor cabling.

The following figure illustrates the cable routing guidelines with an example drive.

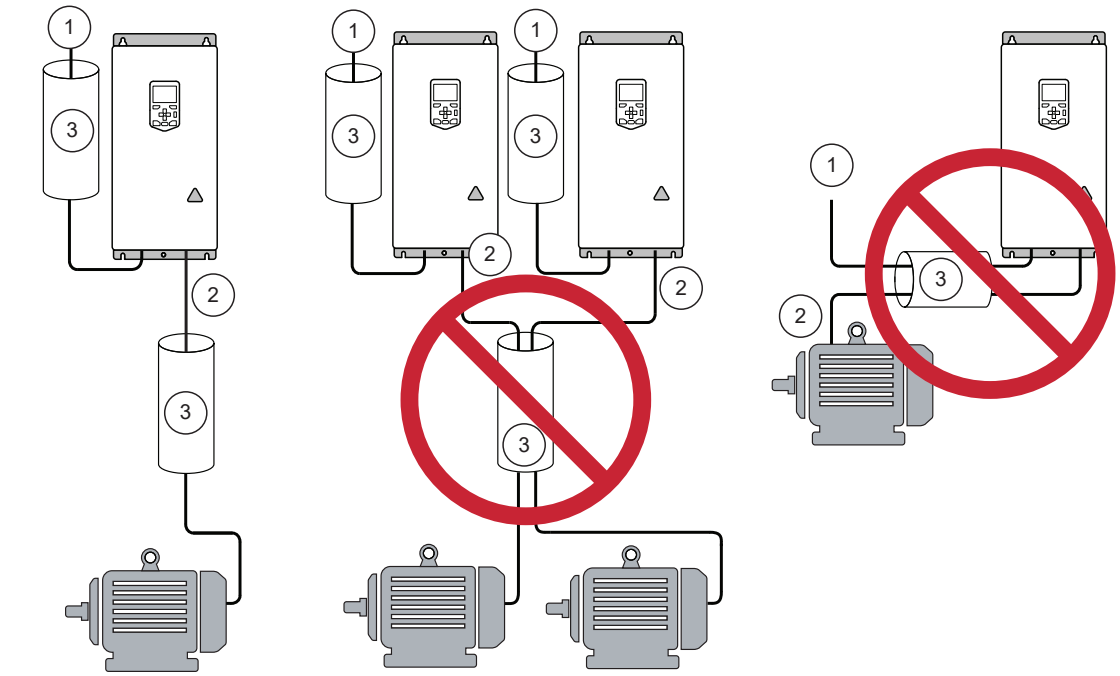

1	Input power cabling
2	Motor cabling
3	Conduit

Continuous motor cable shield/conduit or enclosure for equipment on the motor cable

To minimize the emission level when safety switches, contactors, connection boxes or similar equipment are installed on the motor cable between the drive and the motor:

- Install the equipment in a metal enclosure.
- Use either a symmetrical shielded cable, or install the cabling in a metal conduit.
- Make sure that there is a good and continuous galvanic connection in the shield/conduit between drive and motor.
- Connect the shield/conduit to the protective ground terminal of the drive and the motor.

Separate control cable ducts

Put 24 V DC and 230 V AC (120 V AC) control cables in separate ducts, unless the 24 V DC cable is insulated for 230 V AC (120 V AC) or insulated with an insulation sleeving for 230 V AC (120 V AC).

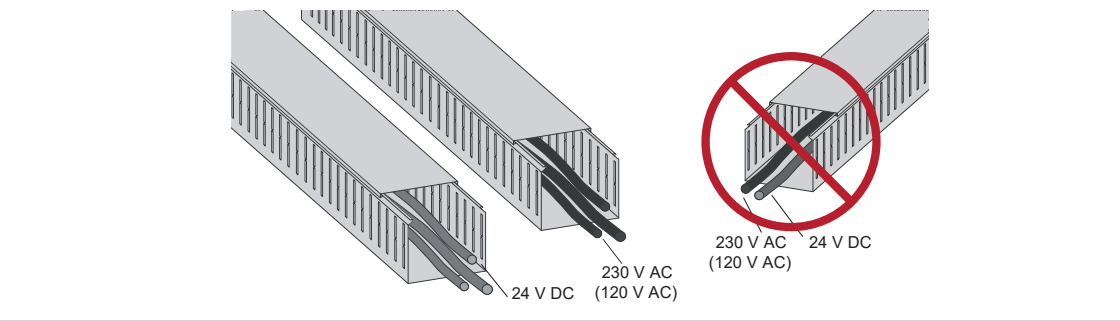

Implementing motor and motor cable short-circuit and thermal overload protection

Protecting the motor and motor cable in short-circuits

The drive protects the motor cable and motor in a short-circuit situation when:

- the motor cable is sized correctly
- the motor cable type complies with the motor cable selection guidelines by ABB
- the cable length does not exceed the allowed maximum length specified for the drive
- the setting of parameter 99.10 Motor nominal power in the drive is equal with the value given on the motor rating plate.

The electronic power output short-circuit protection circuitry meets the requirements of IEC 60364-4-41 2005/AMD1.

Protecting the motor cables against thermal overload

The drive protects the motor cables against thermal overload when the cables are sized according to the nominal output current of the drive. No additional thermal protection devices are needed.

WARNING!
If the drive is connected to multiple motors, use a separate overload protection for each motor cable and motor. The drive overload protection is tuned for the total motor load. It may not detect an overload in one motor circuit only.

North America: The local code (NEC) requires an overload protection and a short-circuit protection for each motor circuit. Use, for example:

- manual motor protector
- circuit breaker, contactor and overload relay or
- fuses, contactor and overload relay.

Protecting the motor against thermal overload

According to regulations, the motor must be protected against thermal overload and the current must be switched off when overload is detected. The drive includes a motor thermal protection function that protects the motor and switches off the current when necessary. Depending on a drive parameter value, the function either monitors a calculated temperature value (based on a motor thermal model) or an actual temperature indication given by motor temperature sensors.

The motor thermal protection model supports thermal memory retention and speed sensitivity. The user can tune the thermal model further by feeding in additional motor and load data.

The most common temperature sensor types are PTC or Pt100.

For more information, see the firmware manual.

Protecting the motor against overload without thermal model or temperature sensors

Motor overload protection protects the motor against overload without using motor thermal model or temperature sensors.

Motor overload protection is required and specified by multiple standards including the US National Electric Code (NEC) and the common UL/IEC 61800-5-1 standard in conjunction with UL/IEC 60947-4-1. The standards allow for motor overload protection without external temperature sensors.

The protection feature of the drive allows the user to specify the class of operation in the same manner as the overload relays are specified in standards UL/IEC 60947-4-1 and NEMA ICS 2.

The motor overload protection supports thermal memory retention and speed sensitivity.

For more information, see drive firmware manual.

Protecting the drive and the input power cable in short-circuits

Protect the drive (1) with fuses (a) and the input cable with fuses (b) or a circuit breaker.

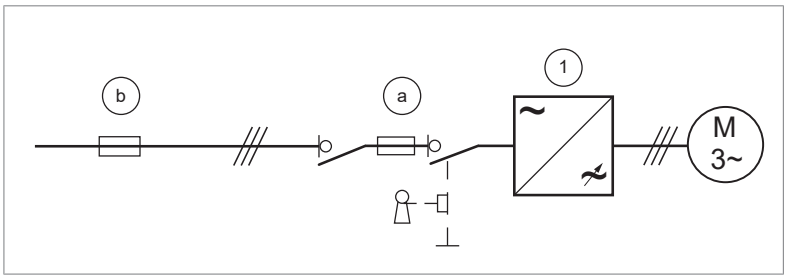

Select the fuses or the circuit breaker according to local regulations for the input cable protection. Select the fuses for the drive according to the instructions given in the technical data. The fuses for the drive protection will restrict drive damage and prevent damage to adjoining equipment in case of a short-circuit inside the drive.

Note: Circuit breakers must not be used without fuses.

WARNING!
Due to the inherent operating principle and construction of circuit breakers, independent of the manufacturer, hot ionized gases can escape from the breaker enclosure in case of a short-circuit. To ensure safe use, pay special attention to the installation and placement of the breakers. Obey the manufacturer's instructions.

Protecting the drive against thermal overload

The drive has overload protection as standard.

Protecting the input power cable against thermal overload

The drive has overload protection as standard. If the sizing of the input power cable is correct, the drive overload protection protects also the cable against overload. In case of parallel input power cables, it may be necessary to protect each cable separately. Obey the local regulations.

Using a safety switch between the drive and the motor

ABB recommends to install a safety switch between the permanent magnet motor and the drive output. The switch is needed to isolate the motor from the drive during maintenance work on the drive.

Implementing an ATEX-certified motor thermal protection

With option +Q971, the drive provides ATEX-certified safe motor disconnection without contactor using the drive Safe torque off function. To implement the thermal protection of a motor in explosive atmosphere (Ex motor), you must also:

- use an ATEX-certified Ex motor
- order an ATEX-certified thermistor protection module for the drive (option +L537), or acquire and install an ATEX-compliant protection relay
- do the necessary connections.

For more information, see:

User's manual	Manual code (English)
CPTC-02 ATEX-certified thermistor protection module, Ex II (2) GD (option +L537+Q971) user's manual	3AXD50000030058

Controlling a contactor between drive and motor

The control of the output contactor depends on how you use the drive, that is, which motor control mode and which motor stop mode you select.

If you have the vector control mode and motor ramp stop selected, open the contactor as follows:

1. Give a stop command to the drive.
2. Wait until the drive decelerates the motor to zero speed.
3. Open the contactor.

If you have the vector control mode and motor coast stop selected, or scalar control mode selected, open the contactor as follows:

1. Give a stop command to the drive.
2. Open the contactor.

WARNING!
When the vector control mode is in use, never open the output contactor while the drive controls the motor. The vector control operates extremely fast, much faster than it takes for the contactor to open its contacts. When the contactor starts opening while the drive controls the motor, the vector control will try to maintain the load current by immediately increasing the drive output voltage to the maximum. This will damage, or even burn, the contactor completely.

Implementing a bypass connection

If bypassing is required, employ mechanically or electrically interlocked contactors between the motor and the drive and between the motor and the power line. Make sure with interlocking that the contactors cannot be closed simultaneously. The installation must be clearly marked as defined in IEC/EN/UL 61800-5-1, subclause 6.5.3, for example, “THIS MACHINE STARTS AUTOMATICALLY”.

WARNING!
Never connect the drive output to the electrical power network. The connection may damage the drive.

Example bypass connection

An example bypass connection is shown below.

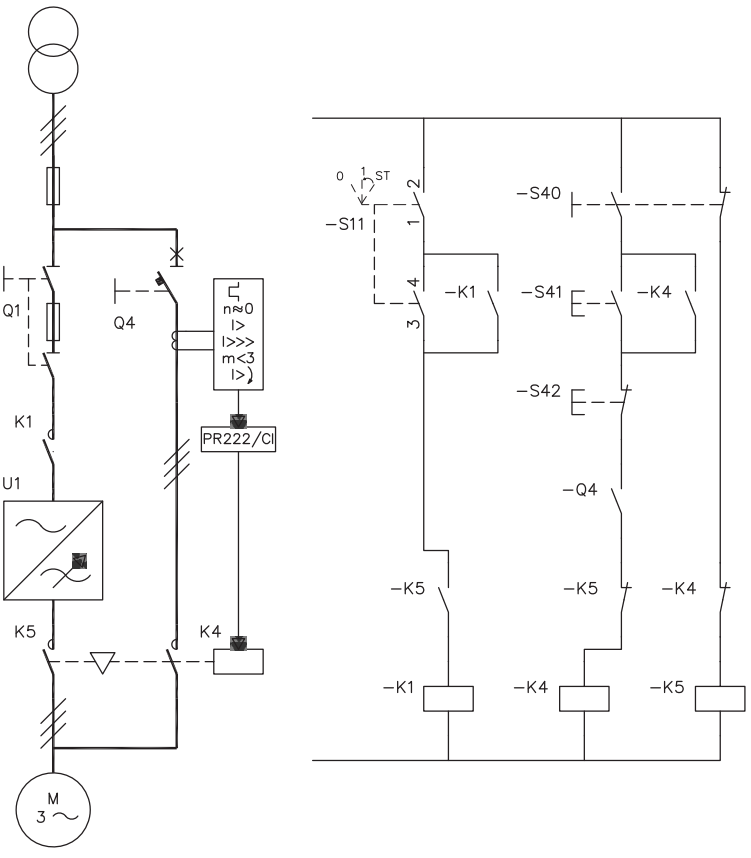

Q1	Drive main switch

Q4	Bypass circuit breaker
K1	Drive main contactor
K4	Bypass contactor
K5	Drive output contactor
S11	Drive main contactor on/off control
S40	Motor power supply selection (drive or direct-on-line)
S41	Start when motor is connected direct-on-line
S42	Stop when motor is connected direct-on-line

Switching the motor power supply from drive to direct-on-line

1. Stop the drive and the motor with the drive control panel stop key (drive in the local control mode) or the external stop signal (drive in the remote control mode).
2. Open the main contactor of the drive with S11.
3. Switch the motor power supply from the drive to direct-on-line with S40.
4. Wait for 10 seconds to allow the motor magnetization to dissipate.
5. Start the motor with S41.

Switching the motor power supply from direct-on-line to drive

1. Stop the motor with S42.
2. Switch the motor power supply from direct-on-line to the drive with S40.
3. Close the main contactor of the drive with switch S11 (-> turn to position ST for two seconds and leave to position 1).
4. Start the drive and the motor with the drive control panel start key (drive in the local control mode) or the external start signal (drive in remote control mode).

Protecting the contacts of relay outputs

Inductive loads (relays, contactors, motors) cause voltage transients when switched off.

The relay contacts on the drive control unit are protected with varistors (250 V) against overvoltage peaks. In spite of this, it is highly recommended that inductive loads are equipped with noise attenuating circuits (varistors, RC filters [AC] or diodes [DC]) to minimize the EMC emission at switch-off. If not suppressed, the disturbances may connect capacitively or inductively to other conductors in the control cable and form a risk of malfunction in other parts of the system.

Install the protective component as close to the inductive load as possible. Do not install protective components at the relay outputs.

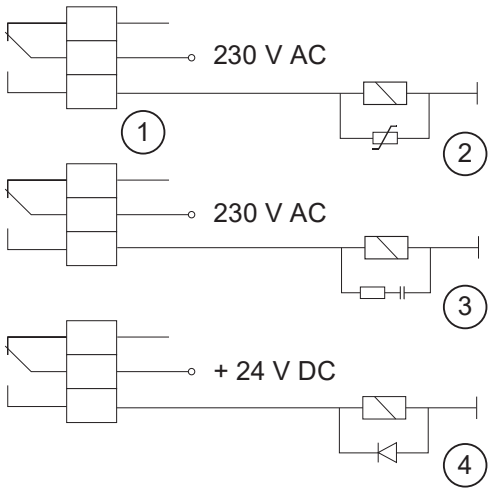

1	Relay output
2	Varistor
3	RC filter
4	Diode

Implementing a motor temperature sensor connection

WARNING!
IEC 61800-5-1 requires double or reinforced insulation between live parts and accessible parts when:

- the accessible parts are not conductive, or
- the accessible parts are conductive, but not connected to the protective earth.

Obey this requirement when you plan the connection of the motor temperature sensor to the drive.

You have these implementation alternatives:

1. If there is double or reinforced insulation between the sensor and the live parts of the motor: You can connect the sensor directly to the analog/digital input(s) of the drive. See the control cable connection instructions. Make sure that the voltage is not more than the maximum allowed voltage over the sensor.
2. If there is basic insulation between the sensor and the live parts of the motor, or if the insulation type is not known: You can connect the sensor to the drive via an option module. The sensor and the module must form a double or reinforced insulation between the motor live parts and the drive control unit. See Connecting a motor temperature sensor to the drive through an option module (Page 96). Make sure that the voltage does not exceed the maximum allowed voltage over the sensor.
3. If there is basic insulation between the sensor and the live parts of the motor, or if the insulation type is not known: You can connect a sensor to a digital input of the drive via an external relay. The sensor and the relay must form a double or reinforced insulation between the motor's live parts and the digital input of the drive. Make sure that the voltage does not exceed the maximum allowed voltage over the sensor.

Connecting a motor temperature sensor to the drive through an option module

This table shows:

- option module types that you can use for the motor temperature sensor connection
- insulation or isolation level that each option module forms between its temperature sensor connector and other connectors
- temperature sensor types that you can connect to each option module
- temperature sensor insulation requirement in order to form, together with the insulation of the option module, a reinforced insulation between the motor live parts and the drive control unit.

Option module		Temperature sensor type			Temperature sensor insulation requirement
Type	**Insulation/Isolation**	**PTC**	**KTY**	**Pt100, Pt1000**	
CMOD-02	Reinforced insulation between the sensor connector and other connectors (including drive control unit connector). The drive control unit is PELV compatible also when the module and a thermistor protection circuit are installed.	x	-	-	No special requirement
CPTC-02		x	-	-	No special requirement

For more information, refer to

- Connecting motor temperature sensors to the drive (Page 118)
- CMOD-02 multifunction extension module (external 24 V AC/DC and isolated PTC interface) (Page 253)
- CPTC-02 ATEX-certified thermistor protection module, Ex II (2) GD (option +L537+Q971) user's manual (3AXD50000030058 [English]).

9

Electrical installation

Contents of this chapter

This chapter gives instructions on the wiring of the drive.

Safety

WARNING!
If you are not a qualified electrical professional, do not do installation or maintenance work. Obey the safety instructions of the drive. If you ignore them, injury or death, or damage to the equipment can occur.

Grounding the motor cable shield at the motor end

For minimum radio-frequency interference, ground the cable shield 360 degrees at the cable entry of the motor terminal box.

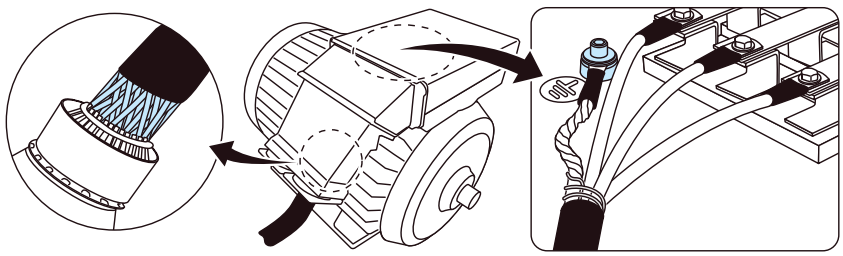

Measuring the insulation

Measuring the insulation resistance of the drive

WARNING!
Do not do any voltage withstand or insulation resistance tests on any part of the drive as testing can damage the drive. Every drive has been tested for insulation between the main circuit and the chassis at the factory. Also, there are voltage-limiting circuits inside the drive which cut down the testing voltage automatically.

Measuring the insulation resistance of the input power cable

Before you connect the input power cable to the drive, measure its insulation resistance according to local regulations.

Measuring the insulation resistance of the motor and motor cable

WARNING!
Obey the safety instructions of the drive. If you ignore them, injury or death, or damage to the equipment can occur. If you are not a qualified electrical professional, do not do installation, commissioning or maintenance work.

1. Do the steps in section Electrical safety precautions (Page 21) before you start the work.
2. Make sure that the motor cable is disconnected from the drive output terminals.
3. Measure the insulation resistance between each phase conductor and the protective earth conductor. Use a measuring voltage of 1000 V DC. The insulation resistance of an ABB motor must be more than 100 Mohm (reference value at 25 °C [77 °F]). For the insulation resistance of other motors, refer to the manufacturer's instructions.

   Note: Moisture inside the motor reduces the insulation resistance. If you think that there is moisture in the motor, dry the motor and do the measurement again.

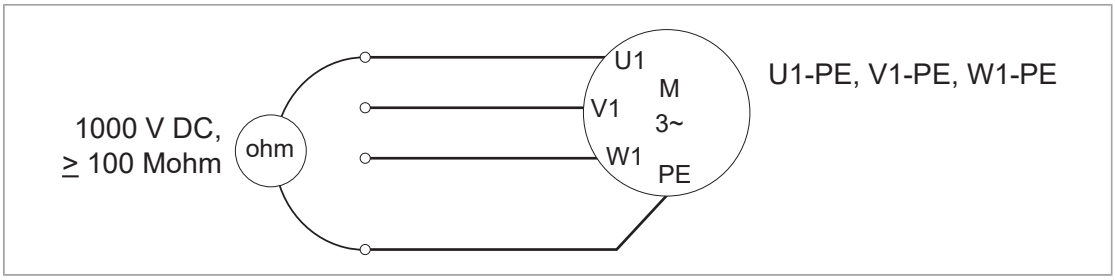

Measuring the insulation of brake resistor and resistor cable

Obey the instructions given in section Measuring the insulation resistance of the brake resistor circuit (Page 228).

Grounding system compatibility check

The standard drive with internal EMC filter +E210 and the ground-to-phase varistor connected can be installed to a symmetrically grounded TN-S system. If you install the drive to another system, you may need to disconnect the EMC filter and ground-to-phase varistor.

WARNING! Do not install the drive with the EMC filter and the ground-to-phase varistor connected to a system that they are not suitable for. If you do, it can cause danger or damage the drive.

Corner-grounded and midpoint-grounded delta systems

WARNING! Do not install the drive on a corner-grounded or midpoint-grounded delta system. Disconnecting the EMC filter and ground-to-phase varistor does not prevent damage to the drive.

Identifying the grounding system of the electrical power network

WARNING!
Only a qualified electrical professional may do the work instructed in this section. Depending on the installation site, the work may even be categorized as live working. Continue only if you are an electrical professional certified for the work. Obey the local regulations. If you ignore them, injury or death can occur.

To identify the grounding system, examine the supply transformer connection. See the applicable electrical diagrams of the building. If that is not possible, measure these voltages at the distribution board, and use the table to define the grounding system type.

1. input voltage line to line (U_{L-L})
2. input voltage line 1 to ground (U_{L1-G})
3. input voltage line 2 to ground (U_{L2-G})
4. input voltage line 3 to ground (U_{L3-G}).

The table below shows the line-to-ground voltages in relation to the line-to-line voltage for each grounding system.

U_{L-L}	U_{L1-G}	U_{L2-G}	U_{L3-G}	Electrical power system type
X	0.58·X	0.58·X	0.58·X	Symmetrically grounded TN system (TN-S system)
X	1.0·X	1.0·X	0	Corner-grounded delta system (nonsymmetrical)
X	0.866·X	0.5·X	0.5·X	Midpoint-grounded delta system (nonsymmetrical)
X	Varying level versus time	Varying level versus time	Varying level versus time	IT systems (ungrounded or high-resistance-grounded [>30 ohms]) nonsymmetrical
X	Varying level versus time	Varying level versus time	Varying level versus time	TT system (the protective earth connection for the consumer is provided by a local earth electrode, and there is another independently installed at the generator)

When to disconnect EMC filter and ground-to-phase varistor: TN-S, IT, corner-grounded delta, and midpoint-grounded delta systems

Symmetrically grounded TN systems (TN-S systems)	
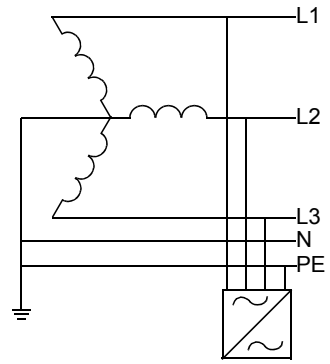	Do not disconnect EMC AC and VAR wires.
Corner-grounded delta systems	
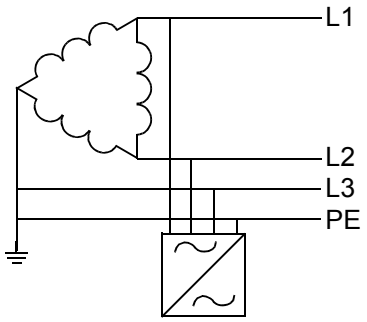	**Do not install the drive on a corner-grounded system.**
Midpoint-grounded delta systems	
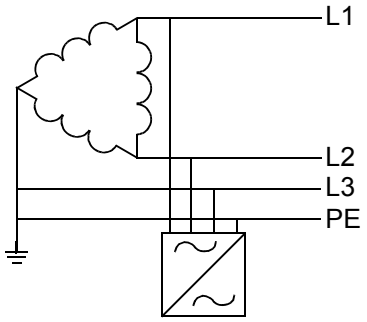	**Do not install the drive on a midpoint grounded system.**
IT systems (ungrounded or high-resistance grounded [>30 ohms])	
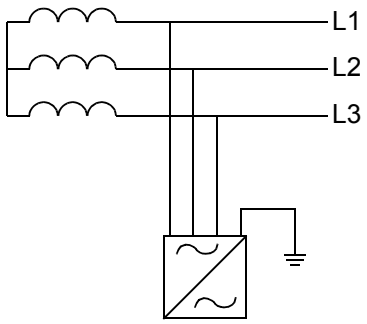	Disconnect EMC AC and VAR wires.

Guidelines for installing the drive to a TT system

The drive can be connected to a TT system under these conditions:

1. Residual current device has been installed in the supply system.
2. These wires have been disconnected. Otherwise ground-to-phase varistor capacitor leakage current will cause the residual current device to trip.

TT system	Ground-to-phase varistor wire
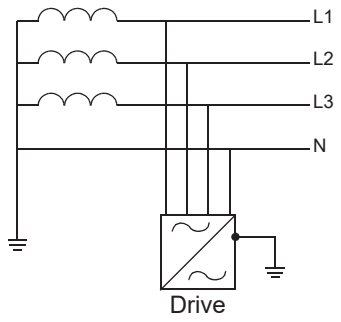	VAR

Note:

- Because the varistor wire has been disconnected, ABB does not guarantee the EMC category.
- ABB does not guarantee the functioning of the ground leakage detector built inside the drive.
- In large systems the residual current device can trip without a real reason.

Source document on TT system: 3AXD10000681917

Disconnecting instructions

EMC AC and varistor (VAR) grounding wires are located at the top of the circuit board compartment. Disconnect them (1) and attach them with the nearby plastic clamp (2).

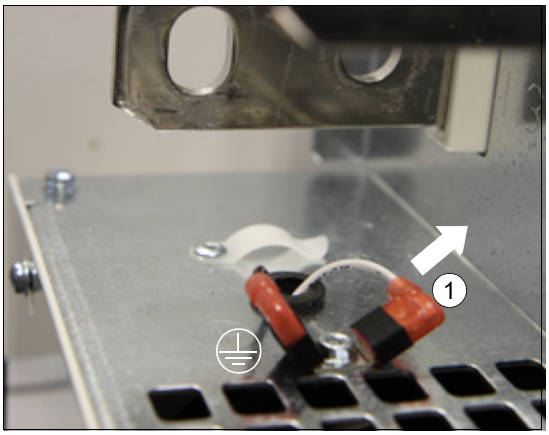

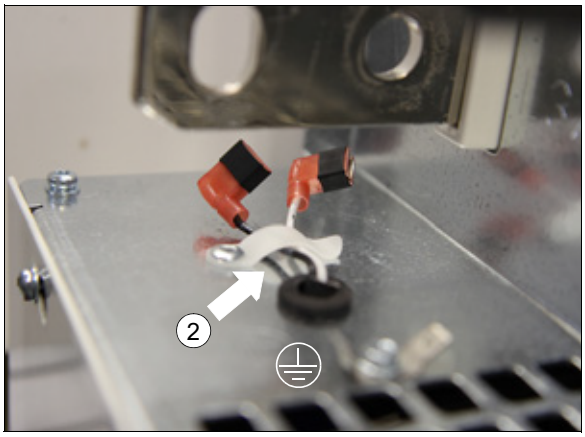

Connecting the power cables

WARNING!
Obey the safety instructions of the drive. If you ignore them, injury or death, or damage to the equipment can occur.

Power cable connection diagram

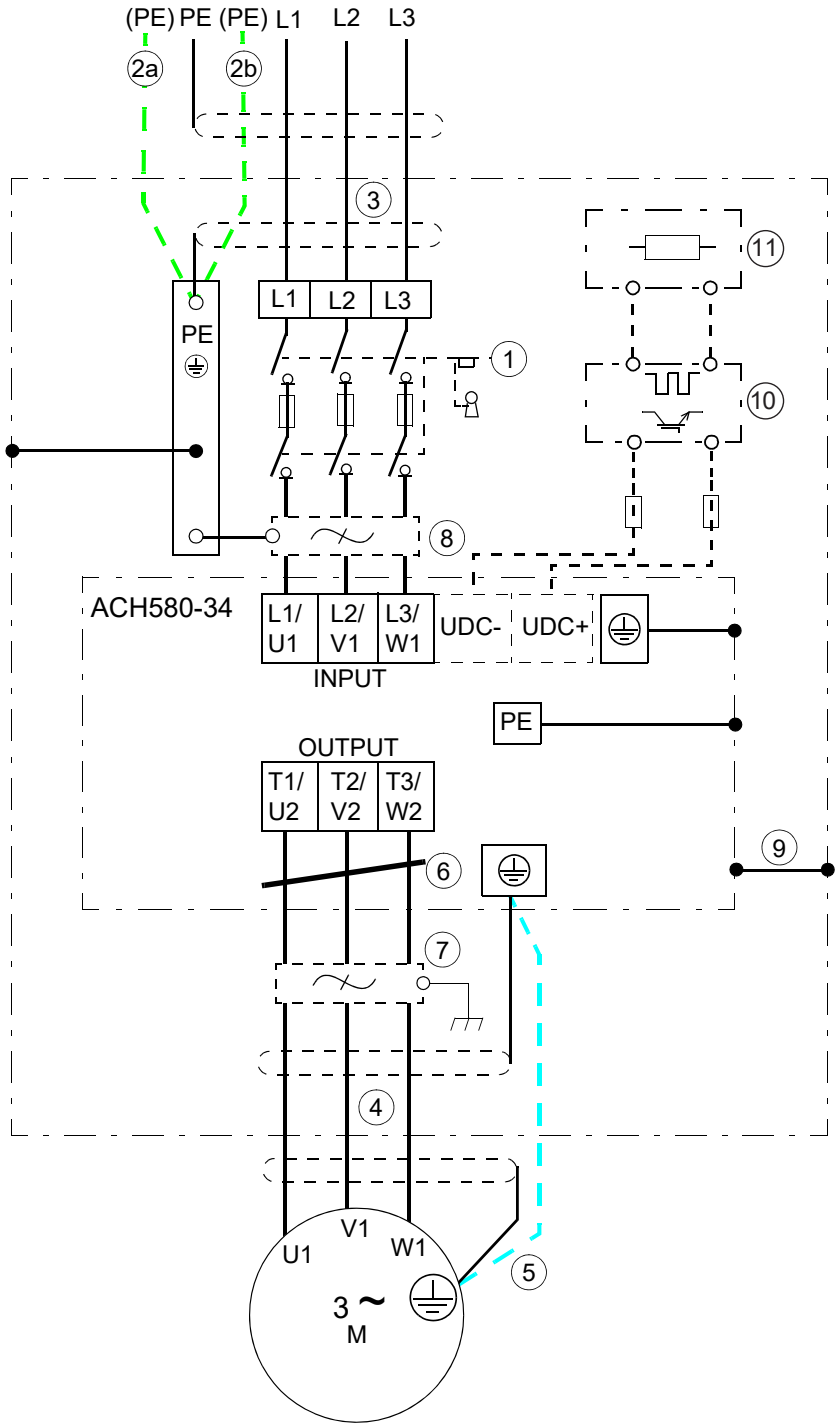

1	For alternatives, see Guidelines for planning the electrical installation (Page 73). In the installing example of this chapter, the disconnecting device is not in the same cubicle with the drive module.
2	If a shielded cable is used (not required but recommended) and the conductivity of the shield is < 50% of the conductivity of the phase conductor, use a separate PE cable (2a) or a cable with a grounding conductor (2b)
3	ABB recommends 360° grounding at the cabinet entry if a shielded cable is used. Ground the other end of the input cable shield or PE conductor at the distribution board.
4	ABB recommends 360° grounding at the cabinet entry

5	Use a separate grounding cable if the conductivity of the cable shield is < 50% of the conductivity of the phase conductor and there is no symmetrically constructed grounding conductor in the cable (see Guidelines for planning the electrical installation (Page 73).
6	Common mode filter
7	d*u*/d*t* filter (option)
8	EMC filter
9	The drive module frame must be connected to the cabinet frame. See Drive modules cabinet design and construction instructions (3AUA0000107668 [English]) and section Grounding the drive module and the LCL filter module (Page 70).
10	Brake chopper
11	Brake resistors
Note: If there is a symmetrically constructed grounding conductor in the motor cable in addition to the conductive shield, connect the grounding conductor to the grounding terminal at the drive and motor ends. Do not use an asymmetrically constructed motor cable. Connecting its fourth conductor at the motor end increases bearing currents and causes extra wear.	

Preparing the cable ends and making 360° grounding at the cable entry

1. Peel off 3…5 cm (1 1/4 … 2 in) of the outer insulation of the cables at the cable entries with the conductive sleeves for the 360° high-frequency grounding.

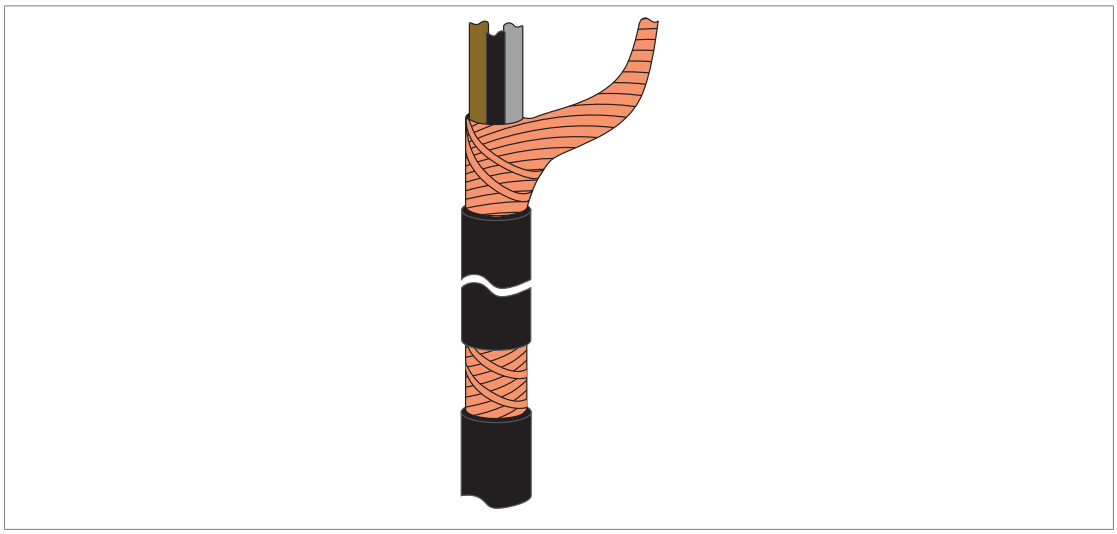

2. Prepare the ends of the cables.

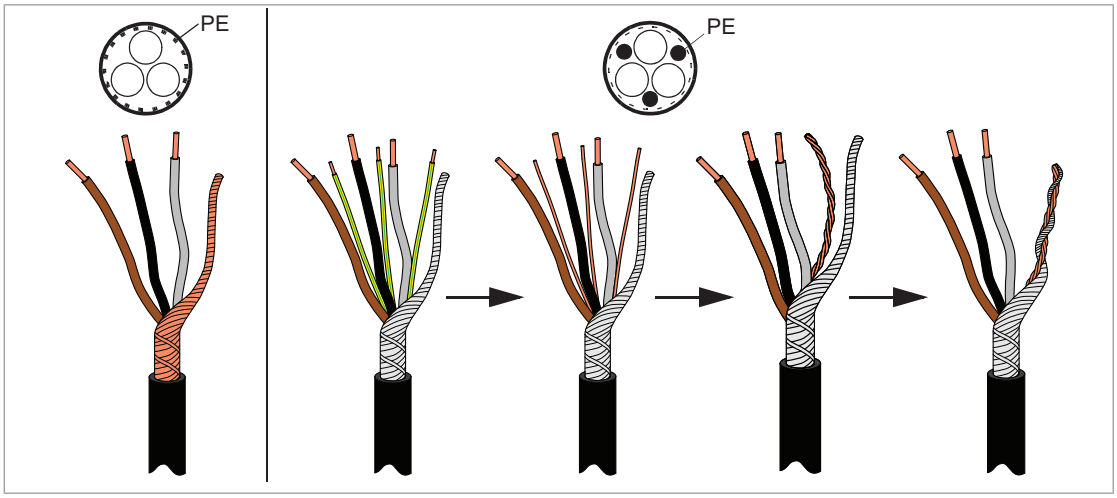

3. Put the cables through the entry plate. If the entry holes have rubber grommets, use one grommet for each cable. Cut adequate hole into the grommet and put the cable through the grommet inside the cabinet.
4. Attach the conductive sleeves to the cable shields with cable ties. Tie up the unused conductive sleeves with cable ties. An example of bottom entry is shown below. For top entry, put the grommet upwards.

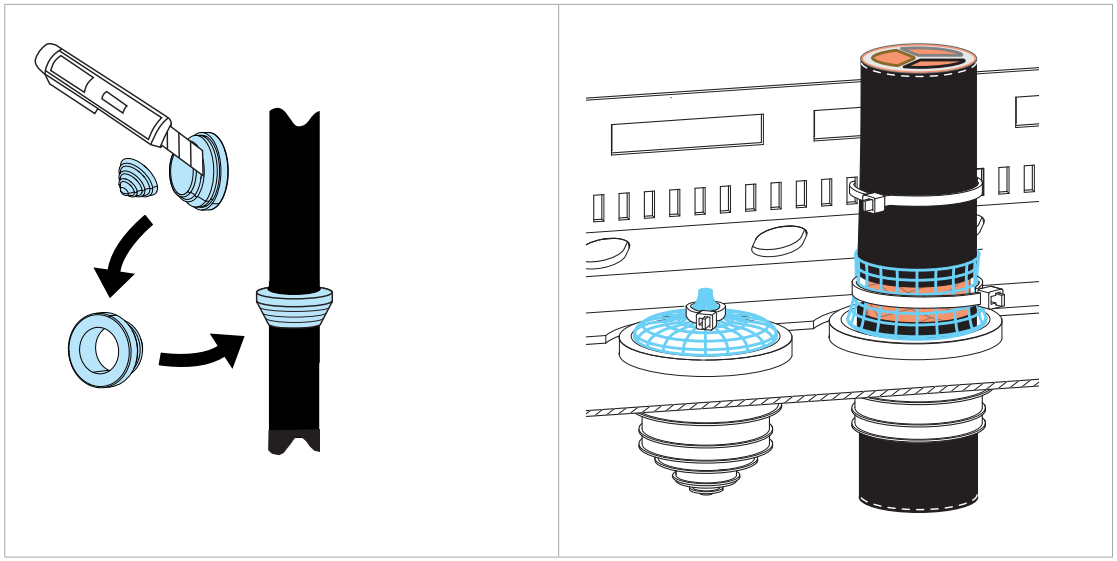

Power cable connection procedure

WARNING!
Obey the safety instructions of the drive. If you ignore them, injury or death, or damage to the equipment can occur.

1. Run the motor cables from the motor to the cabinet. Ground the cable shields 360° at the entry plate.
2. Twist the cable shields of the motor cables into bundles and connect them and any separate ground conductors or cables to the ground terminal of the drive module or to the cabinet ground bar.
3. Connect the phase conductors of the motor cables to terminals T1/U2, T2/V2 and T3/W2 of the drive module. For the tightening torques, see the technical data.

4. Make sure that all power is disconnected and reconnection is not possible. Use correct safe disconnect procedures according to local codes.
5. Run the input cables from the supply source to the cabinet. Ground the cable shields 360° at the entry plate.
6. Twist the cable shields of the input cables into bundles and connect them and any separate ground conductors or cables to the drive module ground terminal or to the cabinet PE busbar.
7. Connect the phase conductors of the input cables to terminals L1/U1, L2/V1 and L3/W1 of the drive module. For the tightening torques, see the technical data.
8. Brake chopper option: Run the power cables from the brake chopper to the cabinet. Ground the cable shield (if present) 360° at the entry plate. Connect the conductors to the UDC+ and UDC- terminals. For the tightening torques, see the technical data.

Connecting the control cables to the integrated control unit

See chapter Control unit (Page 113) for the default I/O connections of the drive control program. The default I/O connections can be different with some hardware options, see the circuit diagrams delivered with the drive for the actual wiring.

1. Ground the outer control cable shields 360° at the cabinet entry plate (recommendation).
2. Remove the middle front cover of the drive module.
3. Attach the option modules if not attached already.
4. Remove the cover plate from the control cable entry plate and put the rubber grommet in its place. Put the control cables through the grommet. Use the M4 holes on the left side plate as mounting points to tie the cables.

   Note: Drive module with IP20 shrouds (option +B051): If you route the control cables from top or bottom instead of front or side, you need to make holes for the entry plates to the clear plastic shrouds.

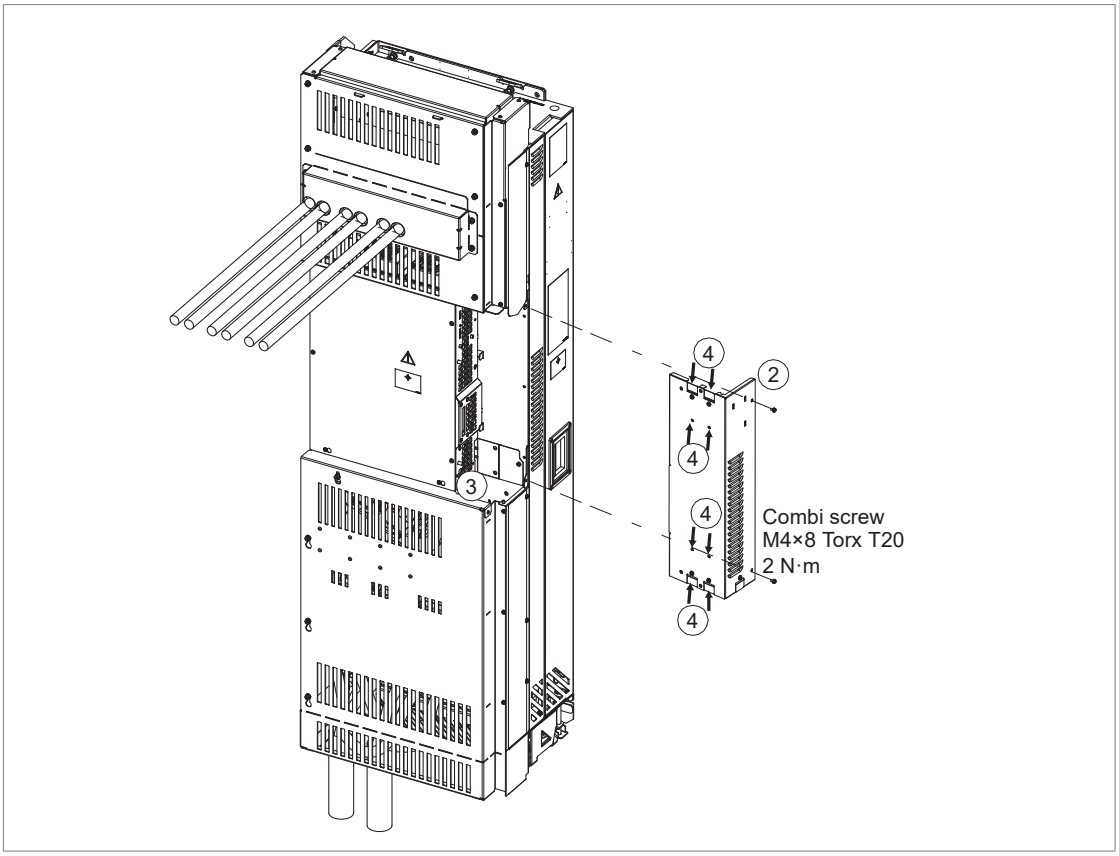

IP20 shrouds (option +B051) included in the drawing.

5. Ground the outer shields of the control cables at the clamp plate. The shields should be continuous as close to the terminals of the control unit as possible. Only remove the outer jacket of the cable at the cable clamp so that the clamp presses on the bare shield. The shield (especially in case of multiple shields) can also be terminated with a lug and fastened with a screw at the clamp plate. Leave the other end of the shield unconnected or ground it indirectly via a few nanofarads high-frequency capacitor, eg, 3.3 nF / 630 V. The shield can also be grounded directly at both ends if they are in the same ground line with no significant voltage drop between the end points. Tighten the screws to secure the connection. Use torque 1.5 N·m (13 lbf·in).

   Ground also the pair-cable shields and grounding wire at the SCR terminal.

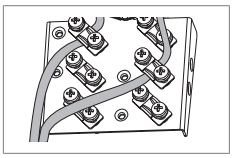

6. Connect the conductors to the appropriate terminals of the control unit, see chapter Control unit (Page 113). Use shrink tubing or insulating tape to contain any stray strands. Tighten the screws to secure the connection.

   Note: Keep any signal wire pairs twisted as close to the terminals as possible. Twisting the wire with its return wire reduces disturbances caused by inductive coupling.

7. Install the middle front cover back.

Connecting external power supply wires to the control units

The external power supply is used to keep the drive control unit (CCU) and line-side converter control unit (ZCU) powered when the main power is off.

When external power supply is used, both control units should be connected to the external supply.

1. To connect CCU to external power: Connect external power supply cables to terminals 40 and 41 on the CCU control unit.
2. To connect ZCU to external power: Connect the provided wire harness from the “ISU ZCU XPOW” plug connector to CCU terminals 40 and 41, or directly to an external power supply.

RED wire = (+) and BLACK wire = (-)

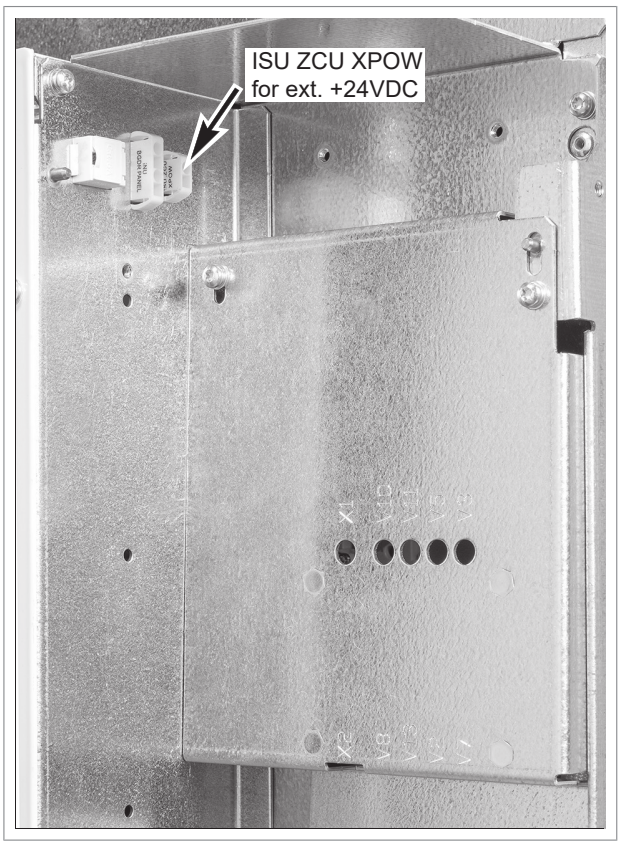

Connecting a control panel

With control panel door mounting platform, connect the control panel as follows:

1. Connect an Ethernet cable to the RJ-45 connector of the control panel.
2. Connect the other end of the cable to the panel port (X12) of the control unit.

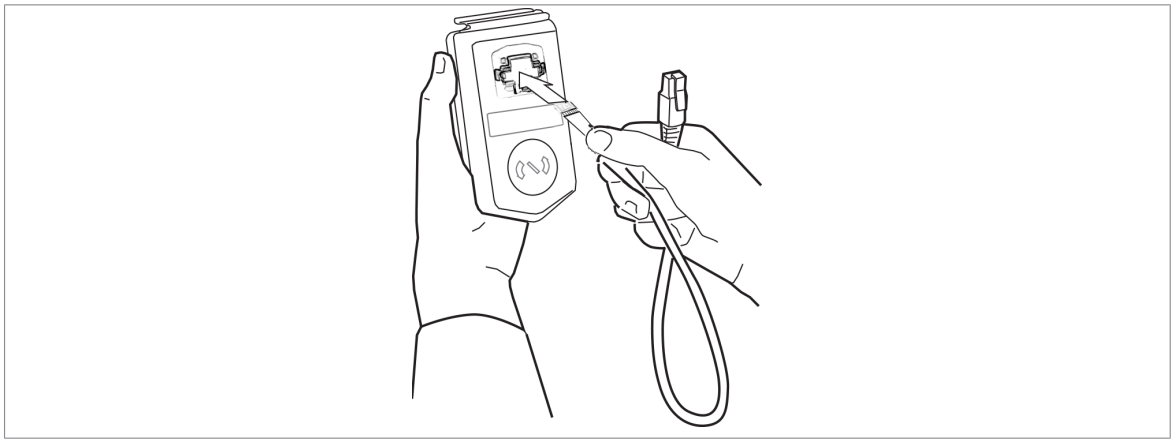

Note: When a PC is connected to the control panel, the control panel keypad is disabled. In this case, the control panel acts as a USB-RS485 adapter.

Connecting a remote panel, or chaining one panel to several drives

You can connect a remote ACH-AP-H control panel to the drive, or to chain the control panel or a PC to several drives on a panel bus with a CDPI-01 communication adapter module. See CDPI-01/-02 panel bus adapters user's manual (3AXD50000009929 [English]).

Connecting a PC

WARNING!
Do not connect the PC directly to the control panel connector of the control unit as this can cause damage.

A PC (with, for example, the Drive composer PC tool) can be connected as follows:

1. To connect a control panel to the unit, either
   - insert the control panel into the panel holder or platform, or
   - use an Ethernet (eg, Cat 5e) networking cable.
2. Remove the USB connector cover on the front of the control panel.
3. Connect an USB cable (Type A to Type Mini-B) between the USB connector on the control panel (3a) and a free USB port on the PC (3b).
4. The panel will display an indication whenever the connection is active.
5. See the documentation of the PC tool for setup instructions.

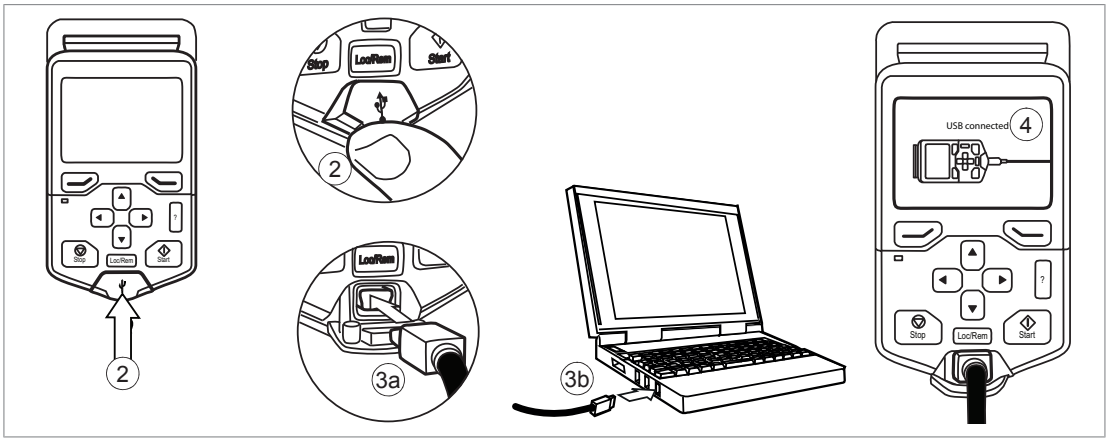

Installing option modules

WARNING!
Obey the safety instructions of the drive. If you ignore them, injury or death, or damage to the equipment can occur.

1. Stop the drive and do the steps in section Electrical safety precautions (Page 21) before you start the work.

Option slot 2 (I/O extension modules)

1. Put the module carefully into its position on the control unit.
2. Tighten the mounting screw.
3. Tighten the grounding screw (CHASSIS) to 0.8 N·m (7 lbf·in). The screw grounds the module. This is necessary for fulfilling the EMC requirements and for correct operation of the module.

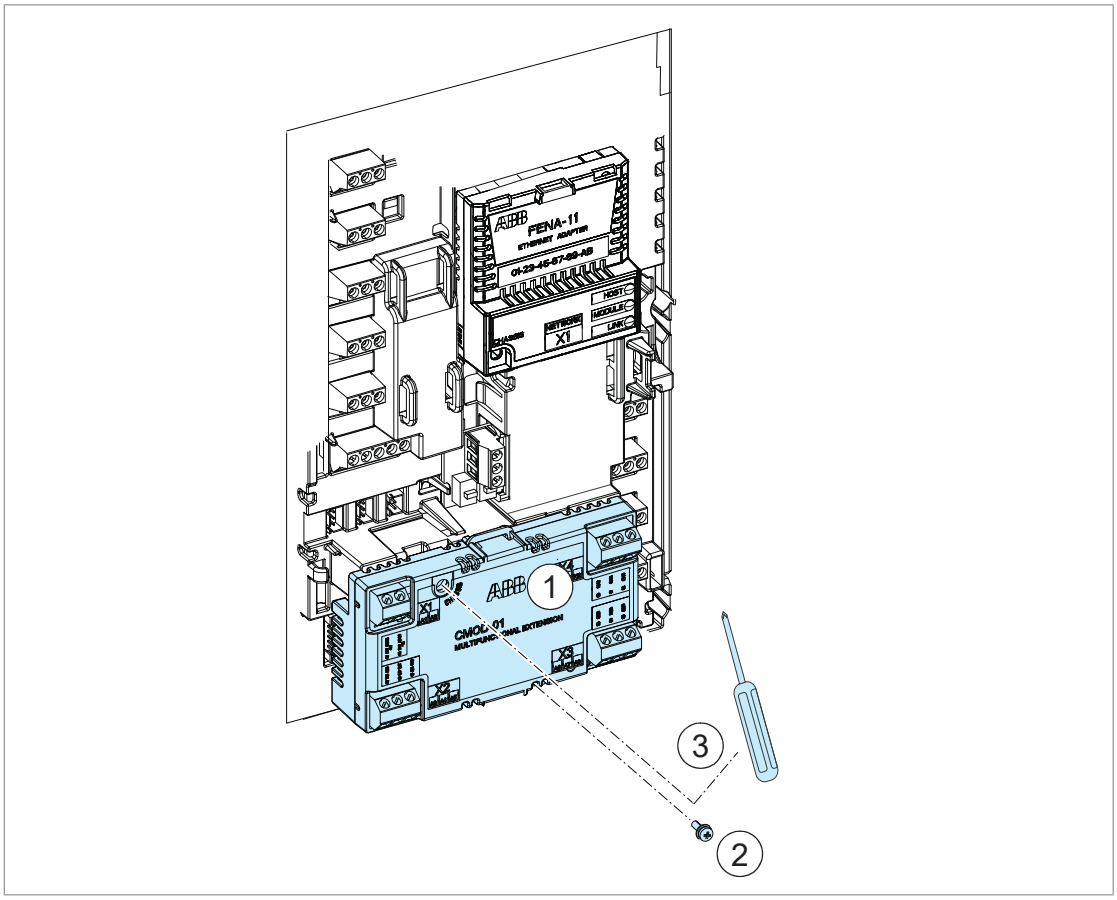

Option slot 1 (fieldbus adapter modules)

1. Put the module carefully into its position on the control unit.
2. Tighten the mounting screw (CHASSIS) to 0.8 N·m (7 lbf·in). The screw tightens the connections and grounds the module. This is necessary for fulfilling the EMC requirements and for correct operation of the module.

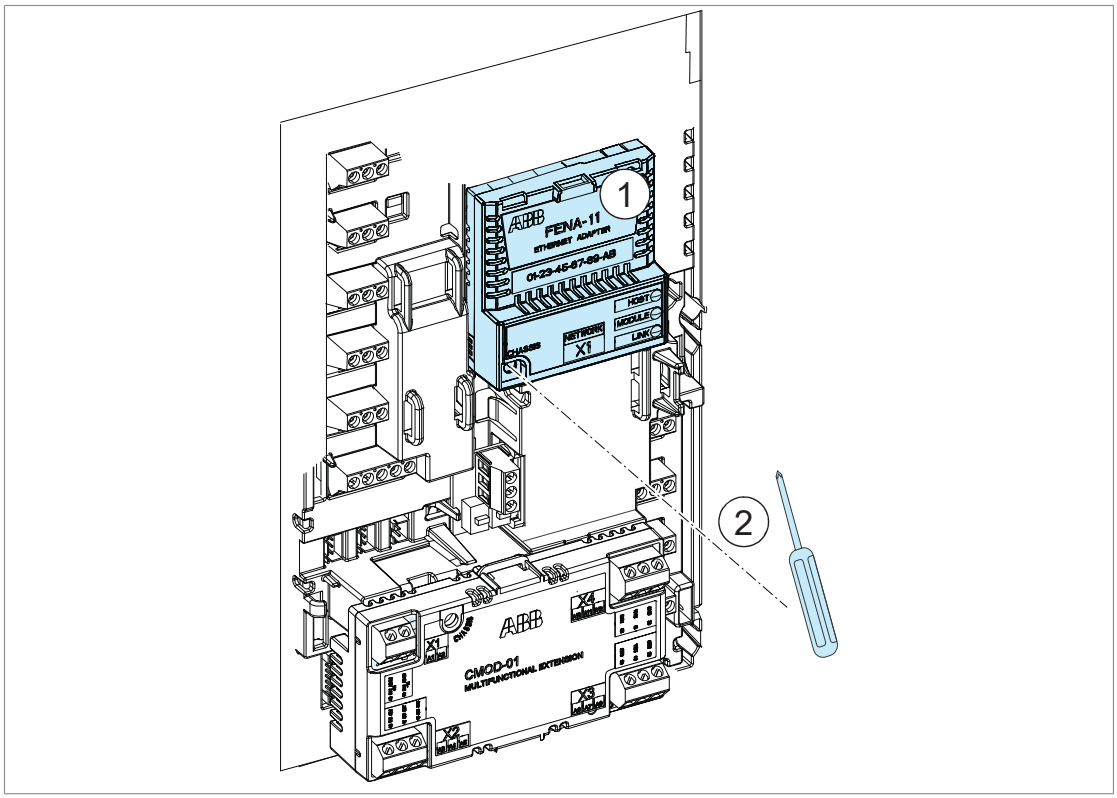

Wiring the optional modules

See the appropriate option module manual or for I/O options the appropriate chapter in this manual.

10

Control unit

Contents of this chapter

This chapter contains the default I/O connection diagram, descriptions of the terminals and technical data for the drive control unit (CCU-24).

Layout

The layout of the external control connection terminals on the drive module control unit is shown below.

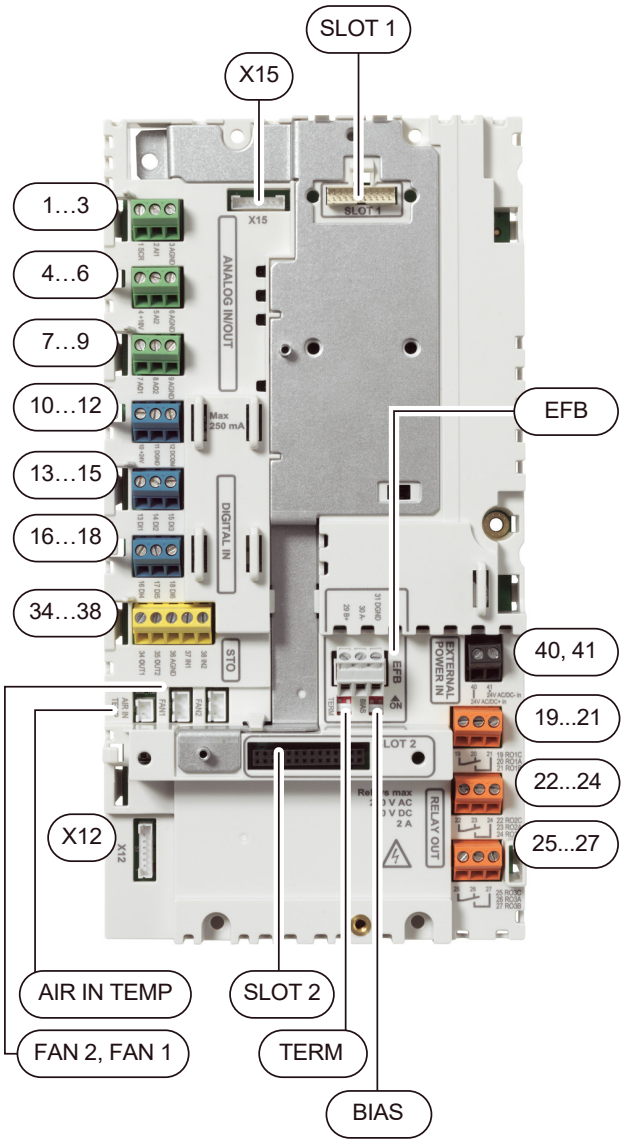

SLOT 1	
Option slot 1 (fieldbus adapter modules)	
ANALOG IN/OUT	
1…3	Analog input 1
4…6	Analog input 2
7…9	Analog outputs
10…12	Auxiliary voltage output, digital input common
DIGITAL IN	
13…18	Digital inputs
STO	
34…38	Safe torque off connection.
AIR IN TEMP	Internal air temperature NTC sensor connection
FAN2	Internal fan 2 connection
FAN1	Internal fan 1 connection
X12	Panel port (control panel connection, wired at the factory to the control panel)
X15	Reserved to internal use.
EFB	
EIA/RS-485 fieldbus connector	
BIAS	Bias resistor switch
TERM	End termination switch
29…31	Connection terminals
SLOT 2	
Option slot 2 (I/O extension modules)	
40, 41	24 V AC/DC external power input
RO1 … RO3	
19…21	Relay output 1 (RO1)
22…24	Relay output 2 (RO2)
25…27	Relay output 3 (RO3)

Default I/O connection diagram

The default control connections for the HVAC default are shown below.

Connection	Term	Description
X1 Reference voltage and analog inputs and outputs		
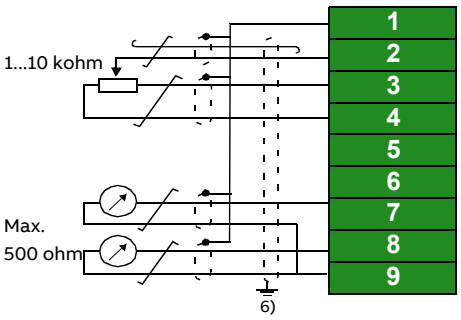		
1	SCR	Signal cable shield (screen)
2	AI1	**Output frequency/speed reference:** 0…10 V [1]
3	AGND	Analog input circuit common
4	+10V	Reference voltage 10 V DC
5	AI2	**Actual feedback:** 0…20 mA [1]
6	AGND	Analog input circuit common
7	AO1	**Output frequency:** 0…10 V
8	AO2	**Motor current:** 0…20 mA
9	AGND	Analog output circuit common
X2 & X3 Aux. voltage output and programmable digital inputs		
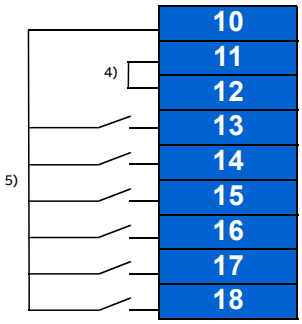		
10	+24V	Aux. voltage output +24 V DC, max. 250 mA [2]
11	DGND	Aux. voltage output common
12	DCOM	Digital input common for all
13	DI1	**Stop (0) / Start (1)**
14	DI2	Not configured
15	DI3	**Constant frequency/speed selection** [3]
16	DI4	**Start interlock 1 (1 = allow start)**
17	DI5	Not configured
18	DI6	Not configured
X6, X7, X8 Relay outputs		
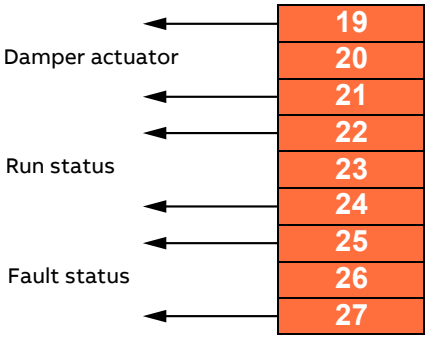		
19	RO1C	**Damper control** 250 V AC / 30 V DC 2 A
20	RO1A	
21	RO1B	
22	RO2C	**Running** 250 V AC / 30 V DC 2 A
23	RO2A	
24	RO2B	
25	RO3C	**Fault (-1)** 250 V AC / 30 V DC 2 A
26	RO3A	
27	RO3B	
X5 Embedded fieldbus		
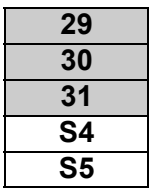		
29	B+	Embedded fieldbus, EFB (EIA-485)
30	A-	
31	DGND	
S4	TERM	Termination switch
S5	BIAS	Bias resistors switch
X4 Safe Torque Off		

Connection		Term	Description
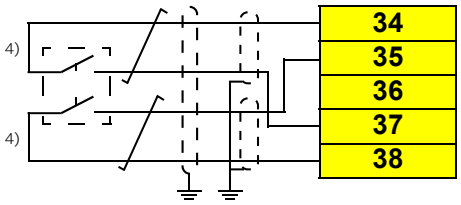	34	OUT1	Safe torque off. Factory connection. Both circuits must be closed for the drive to start.Refer to The Safe torque off function (Page 203).
	35	OUT2	
	36	SGND	
	37	IN1	
	38	IN2	
X10 24 V AC/DC			
	40	24 V AC/DC+ in	External 24 V AC/DC input to power up the control unit when the main supply is disconnected. [7]
	41	24 V AC/DC- in	

Total load capacity of the Auxiliary voltage output +24V (X2:10) is 6.0 W (250 mA / 24 V DC).

Digital inputs DI1…DI5 also support 10…24 V AC.

Terminal sizes (all terminals): 0.14 … 2.5 mm^2 (26…14 AWG)

Tightening torques: 0.5 … 0.6 N·m (4.4 … 5.3 lbf·in)

Wire strip length 7…8 mm (0.3 in)

Notes:

1) Current [0(4)…20 mA, R_{in} = 100 ohm] or voltage [0(2)…10 V, R_{in} >200 kohm]. Change of setting requires changing the corresponding parameter.

2) Total load capacity of the Auxiliary voltage output +24V (X2:10) is 6.0 W (250 mA / 24 V) minus the power taken by the option modules installed on the board.

3) In scalar control: See **Menu** > **Primary settings** > **Start, stop, reference** > **Constant speeds / constant frequencies** or parameter group 28 Frequency reference chain.
In vector control: See **Menu** > **Primary settings** > **Start, stop, reference** > **Constant speeds / constant frequencies** or parameter group 22 Speed reference selection.

DI3	Operation/Parameter	
	Scalar control (default)	**Vector control**
0	Set frequency through AI1	Set frequency through AI1
1	28.26 Constant frequency 1	22.26 Constant speed 1

4) Connected with jumpers at the factory.

5) Use shielded twisted-pair cables for digital signals.

6) Ground the outer shield of the cables 360° at the cabinet entry.

7) **WARNING!** Connect an external AC power supply (24 V AC) only to control unit connectors 40 and 41. If you connect it to connector AGND, DGND or SGND, damage to the power supply or control unit can occur.

Additional information on the control connections

Embedded EIA-485 fieldbus connection

The EIA-485 network uses shielded, twisted-pair cable with a characteristic impedance of 100 … 130 ohm for data signaling. The distributed capacitance between conductors is less than 100 pF per meter (30 pF per foot). Distributed capacitance between conductors and shield is less than 200 pF per meter (60 pF per foot). Foil or braided shields are acceptable.

Connect the cable to the EIA-485 terminal on the control board. Obey these wiring instructions:

- Attach the cable shields together at each drive, but do not connect them to the drive.
- Connect the cable shields only to the grounding terminal in the automation controller.
- Connect the signal ground (DGND) conductor to the signal ground reference terminal in the automation controller. If the automation controller does not have a signal ground reference terminal, connect the signal ground conductor to the cable shield through a 100 ohm resistor, preferably near the automation controller.

Connection examples are shown below.

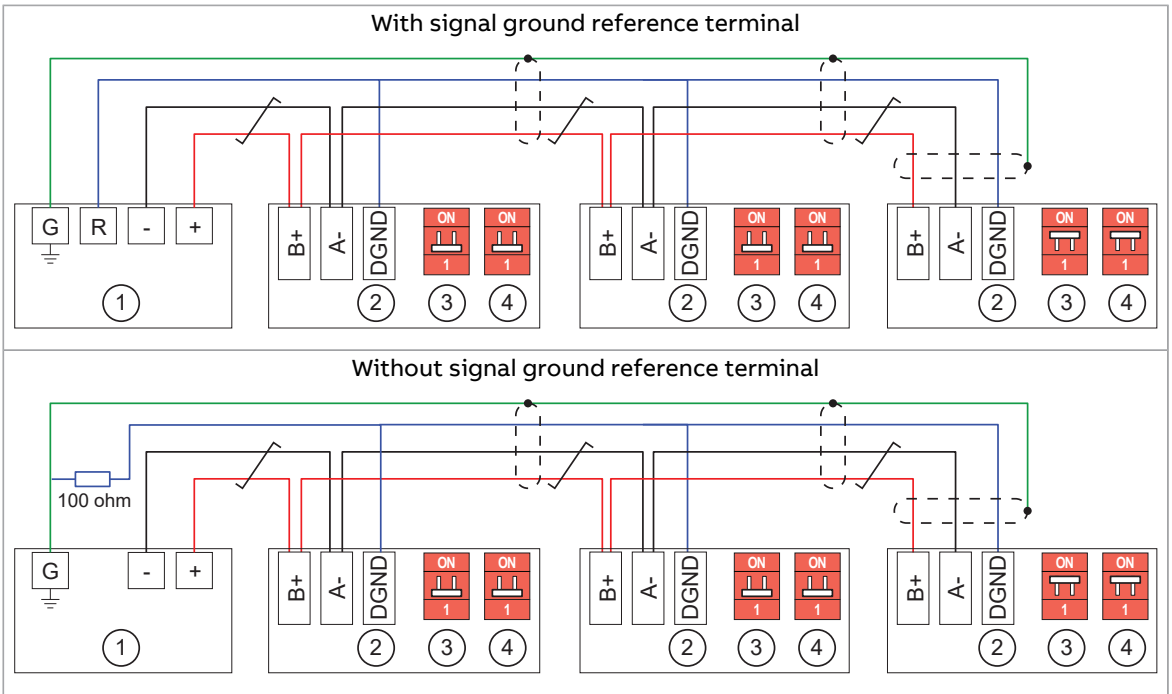

1	Automation controller
2	Drive
3	Termination switch. The devices at the ends of the fieldbus must have termination on. All other devices must have termination off.
4	Biasing switch. One (and only one) device, preferably at the end on the bus must have the bias on.

Connecting motor temperature sensors to the drive

IEC/EN 60664 requires double or reinforced insulation between the control unit and the live parts of the motor. To achieve this, use an CMOD-02 I/O extension module or CPTC-02 ATEX-certified thermistor protection module. Refer to section Implementing a motor temperature sensor connection and chapter CMOD-02 multifunction extension module (external 24 V AC/DC and isolated PTC interface) (Page 253).

PNP configuration for digital inputs (X2 & X3)

Internal and external +24 V power supply connections for PNP configuration are shown in the figure below.

Internal +24 V power supply
PNP connection (source)

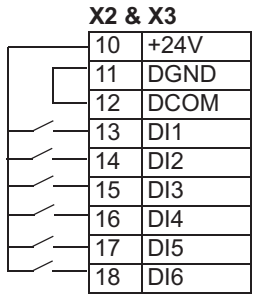

External +24 V power supply
PNP connection (source)

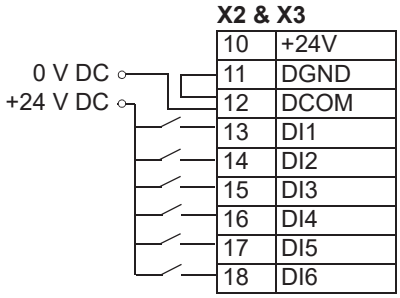

WARNING!
Do not connect the +24 V AC cable to the control unit ground when the control unit is powered from an external 24 V AC supply.

NPN configuration for digital inputs (X2 & X3)

Internal and external +24 V power supply connections for NPN configuration are shown in the figure below.

Internal +24 V power supply
NPN connection (sink)

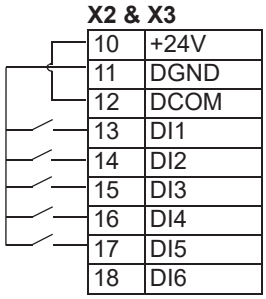

External +24 V power supply
NPN connection (sink)

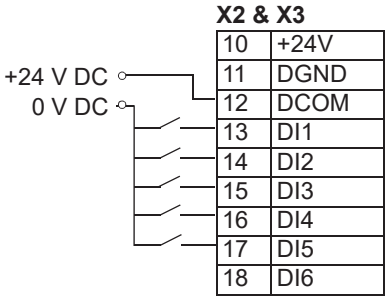

Note: DI6 is not supported in the NPN configuration.

WARNING!
Do not connect the +24 V AC cable to the control unit ground when the control unit is powered from an external 24 V AC supply.

Connection for obtaining 0…10 V from analog output 2 (AO2)

To obtain 0…10 V from analog output AO2, connect a 500 ohm resistor (or two 1 kohm resistors in parallel) between analog output AO2 and analog common ground AGND.

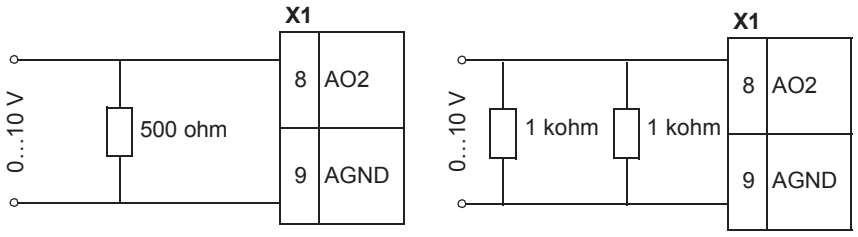

Connection examples of two-wire and three-wire sensors to analog input (AI2)

Note: The maximum capability of the auxiliary voltage output (24 V DC [250 mA]) must not be exceeded.

An example of a two-wire sensor/transmitter supplied by the drive auxiliary voltage output is shown below. Set the input signal to 4…20 mA, not 0…20 mA.

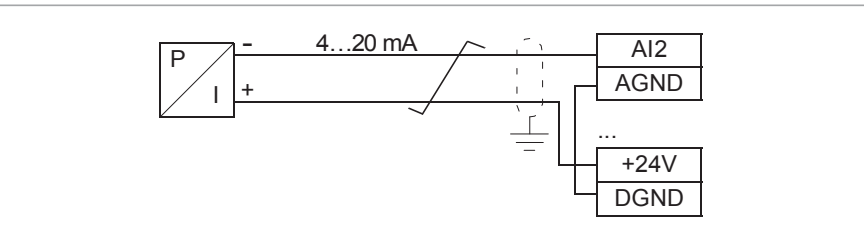

An example of a three-wire sensor/transmitter supplied by the drive auxiliary voltage output is shown below.The sensor is supplied through its current output and the drive feeds the supply voltage (+24 V DC). Thus the output signal must be 4…20 mA, not 0…20 mA.

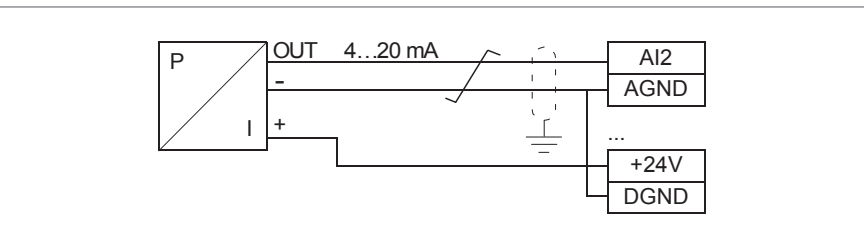

DI5 as frequency input

For setting the parameters for the digital frequency input, see the firmware manual.

Safe torque off (X4)

For the drive to start, both connections (+24 V DC to IN1 and +24 V DC to IN2) must be closed. By default, the terminal block has jumpers to close the circuit.

Remove the jumpers before connecting an external Safe torque off circuitry to the drive. See also chapter The Safe torque off function (Page 203).

Note: Only 24 V DC can be used for STO. Only PNP input configuration can be used.

Technical data

External power supply Term. 40, 41	Maximum power: 36 W, 1.50 A at 24 V AC/DC ±10% as standard Terminal size: 0.14 … 2.5 mm^2 (26 … 14 AWG)
+24 V DC oaroutput (Term. 10)	Total load capacity of this outputs is 6.0 W (250 mA / 24 V) minus the power taken by the option modules installed on board. Terminal size: 0.14 … 2.5 mm^2 (26 … 14 AWG)
Digital inputs DI1…DI6 (Term. 13…18)	Input type: NPN/PNP Terminal size: 0.14 … 2.5 mm^2 (26 … 14 AWG) DI1…DI4 (Term. 13…16) 12/24 V DC logic levels: "0" < 4 V, "1" > 8 V R_{in}: 3 kohm Hardware filtering: 0.04 ms, digital filtering: 2 ms sampling DI5 (Term.17) Can be used as a digital or frequency input. 12/24 V DC logic levels: "0" < 4 V, "1" > 8 V R_{in}: 3 kohm Max. frequency: 16 kHz Symmetrical signal (duty cycle D = 0.50) DI6 (Term.18) Can be used as a digital or PTC input. 12/24 V DC logic levels: "0" < 3 V, "1" > 8 V R_{in}: 3 kohm Max. frequency: 16 kHz Symmetrical signal (duty cycle D = 0.50) Hardware filtering: 0.04 ms, digital filtering: 2 ms sampling **Note:** DI6 is not supported in the NPN configuration. PTC mode – PTC thermistor can be connected between DI6 and +24 V DC: < 1.5 kohm = '1' (low temperature), > 4 kohm = '0' (high temperature), open circuit = '0' (high temperature). DI6 is not a reinforced/double insulated input. Connecting the motor PTC sensor to this input requires usage of a reinforced/double insulated PTC sensor inside the motor
Relay outputs RO1…RO3 (Term. 19…27)	250 V AC / 30 V DC, 2 A. Terminal size: 0.14 … 2.5 mm^2 (26 … 14 AWG) See section Isolation areas (Page 122).
Analog inputs AI1 and AI2 (Term. 2 and 5)	Current/voltage input mode selected with a parameter, see Connecting motor temperature sensors to the drive (Page 118). Current input: 0(4)…20 mA, R_{in}: 100 ohm Voltage input: 0(2)…10 V, R_{in}: > 200 kohm Terminal size: 0.14 … 2.5 mm^2 (26 … 14 AWG) Inaccuracy: typical ±1%, max. ±1.5% of full scale Inaccuracy for Pt100 sensors: 10 °C (50 °F)
Analog outputs AO1 and AO2 (Term. 7 and 8)	Current/voltage output mode for AO1 selected with a parameter, see Connection for obtaining 0…10 V from analog output 2 (AO2) (Page 119). Current output: 0…20 mA, R_{load}: < 500 ohm Voltage input: 0…10 V, R_{load}: > 100 kohm (AO1 only) Terminal size: 0.14 … 2.5 mm^2 (26 … 14 AWG) Inaccuracy: ±1% of full scale (in voltage and current modes)
Reference voltage output for analog inputs +10V DC (Term. 4)	Max. 20 mA output Inaccuracy: ±1%
Safe torque off (STO) inputs IN1 and IN2 (Term. 37 and 38)	24 V DC logic levels: "0" < 5 V, "1" > 13 V R_{in}: 2.47 kohm Terminal size: 0.14 … 2.5 mm^2 (26 … 14 AWG)

Embedded fieldbus (X5)	Connector pitch 5 mm, maximum wire size 2.5 mm^2 (14 AWG) Physical layer: EIA-485 Cable type: Shielded twisted pair cable with twisted pair for data and a wire or pair for signal ground, nominal impedance 100…165 ohms, for example Belden 9842 Transmission rate: 9.6 … 115.2 kbit/s Termination by switch
Control panel - drive connection	EIA-485, male RJ-45 connector, max. cable length 100 m (328 ft)
Control panel - PC connection	USB Type Mini-B, max. cable length 2 m (6.5 ft)

Isolation areas

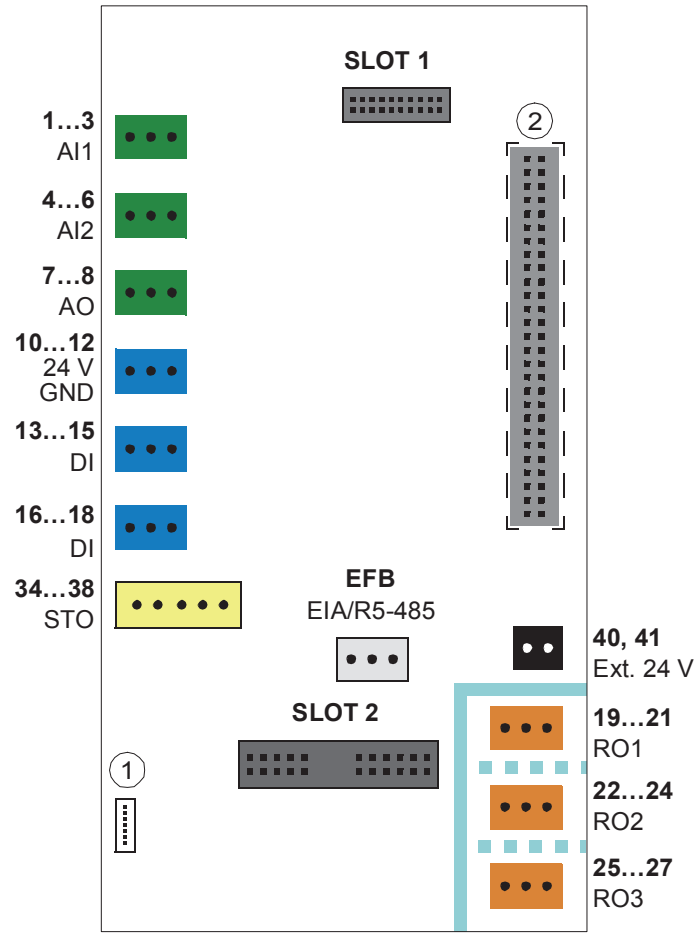

1	Panel port
2	Power unit connection at the bottom of the control unit
	Reinforced insulation (IEC/EN 61800-5-1:2007, UL 61800-5-1 First edition)
	Functional insulation (IEC/EN 61800-5-1:2007, UL 61800-5-1 First edition)

The terminals on the control unit fulfill the Protective Extra Low Voltage (PELV) requirements (EN 50178): There is reinforced insulation between the user terminals which only accept ELV voltages and terminals that accept higher voltages (relay outputs).

Note: There is functional insulation also between the individual relay outputs.

Note: There is reinforced insulation on the power unit.

Ground isolation diagram

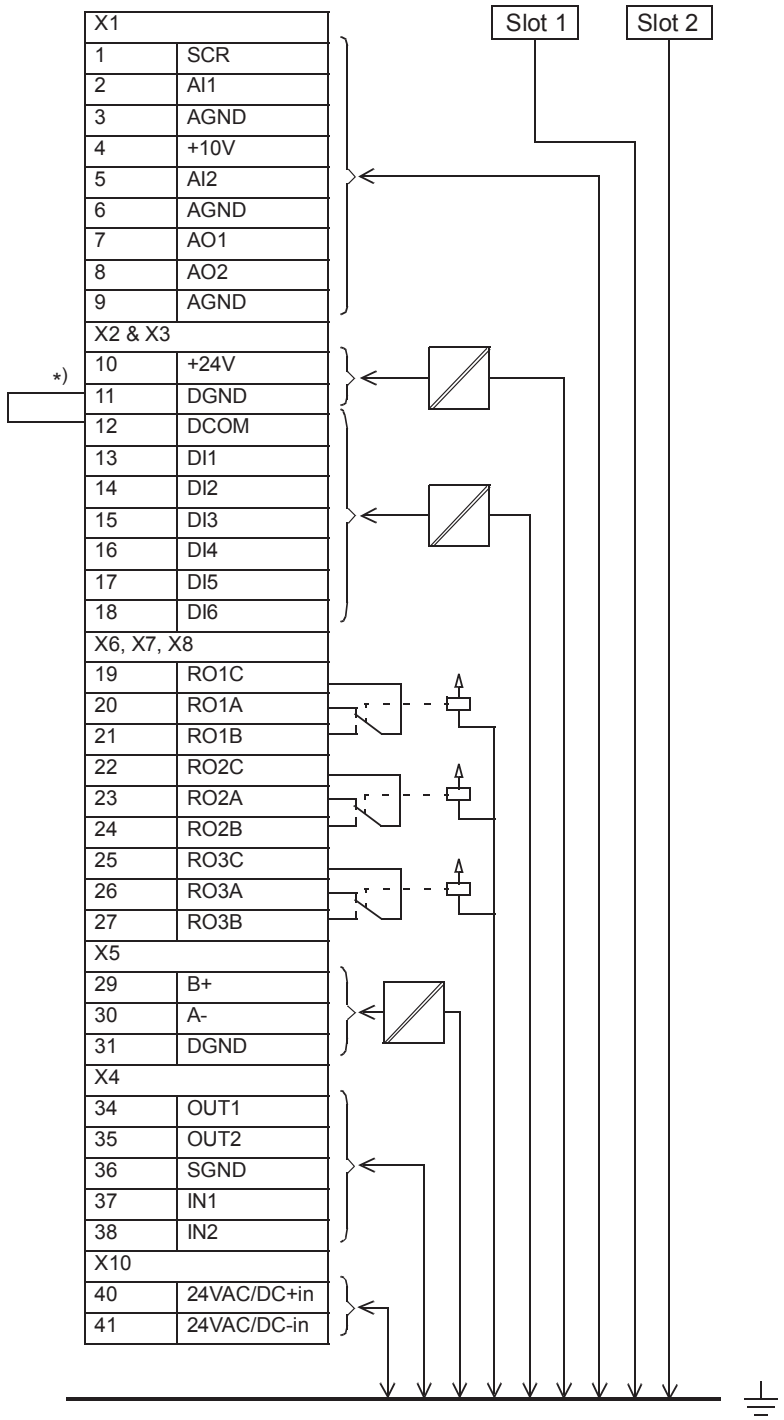

*) Jumper installed at factory

11

External control unit (option +P906)

Contents of this chapter

This chapter describes the external control unit option +P906 and its installation. The dimension drawing is included.

Product overview

Option +P906 allows the drive control unit CCU-24 to be installed separately from the main drive module, for example, in a separate compartment. The external control unit makes the drive module removal easier, as the customer control cabling can stay in place while the module is removed.

Layout

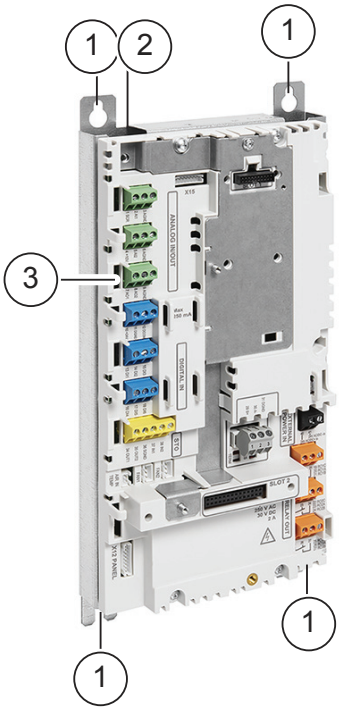	1	Attaching points
	2	Duct for cables from drive module to be connected to the ZBIB board at the back of the control unit.
	3	Connectors. For descriptions, see chapter Control unit (Page 113).
	Cables for connecting the external control unit to the drive module.	

Cables

These cables connect the control unit and the drive. They are supplied with the module and come with plugs and sockets that allow disconnection at either end.

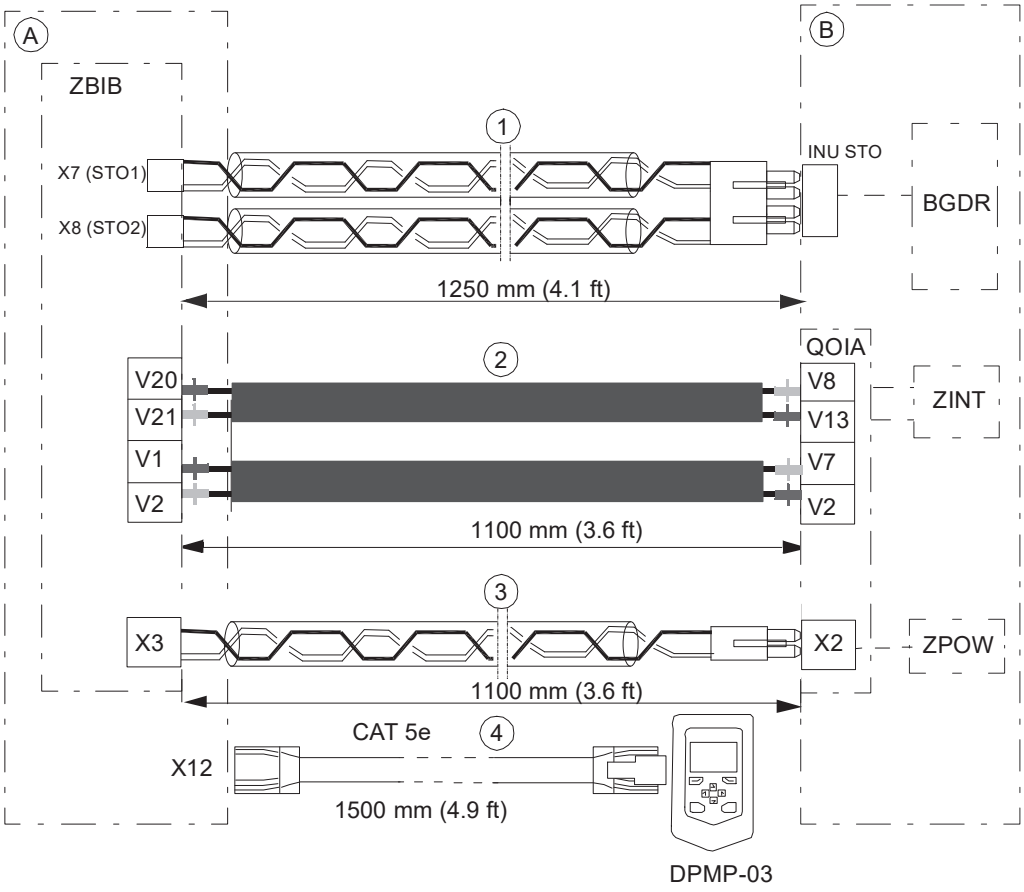

A	CCU-24 control unit	B	Drive module
1	2 × Safe Torque Off (STO) cables	3	1 × 24 V power supply cable (with a ground connection)
2	2 × pair of optical cables for all major converter power stack communication.	4	CAT 5e cable, must be ordered separately

Unpacking the delivery

The external control unit is delivered in a cardboard box inside the main drive module package.

Unpack the external control unit package. Make sure that it contains these items:

- CCU-24 control unit
- mounting template.

The mounting template contains a mounting pattern for a CCU-24 control unit on one side and a mounting pattern for a ZCU-14 control unit on the other side.

Installing the control unit

Determine where the control unit is to be located. Take into account the cable lengths, the physical dimensions and mounting points of the control unit assembly (see section Dimension drawing (Page 134)). Install the unit inside an enclosure for protection.

Installation procedure

WARNING!
Obey these instructions. If you ignore them, equipment malfunction and damage to the fiber optic cables can occur.

- Handle the fiber optic cables with care.
- When you unplug the cables, always hold the connector, not the cable itself.
- Do not touch the ends of the fibers with bare hands as the ends are extremely sensitive to dirt.
- Do not bend the fiber optic cables too tightly. The minimum allowed bend radius is 35 mm (1.4 in).

1. Remove the control unit from the anti-static bag. Put the control unit onto the anti-static bag, with the rear connections up.

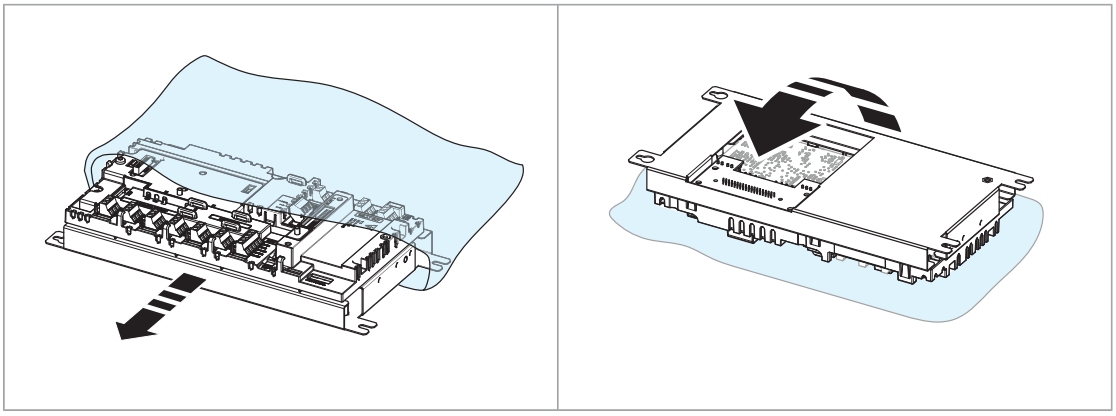

2. Identify the correct ends of the control cables to be connected to the control unit.
3. Pull the cables through the control unit assembly, so they appear in the opening at the rear of the control unit. Do not pull the ground conductor through but leave it outside of the assembly. Make sure that the cables are not against sharp edges or bare live parts.

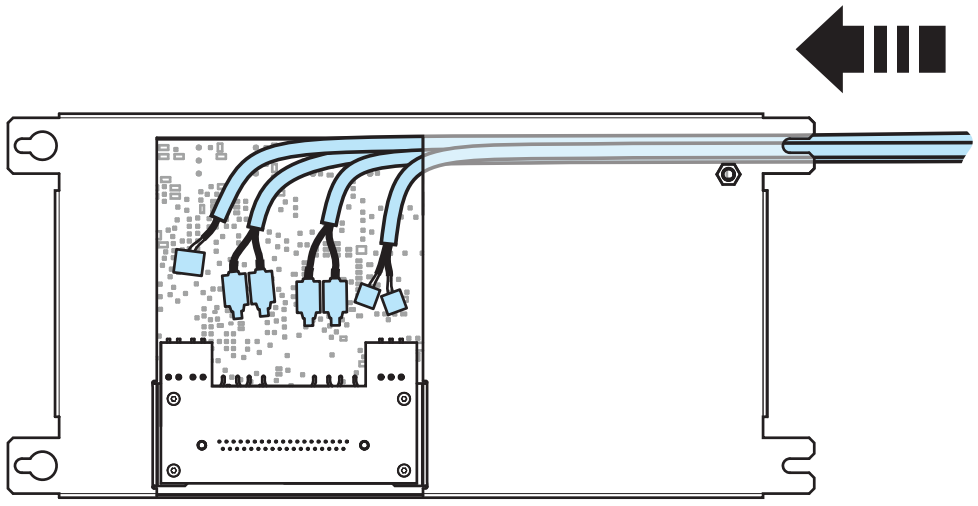

4. Connect the cables to their connectors on the ZBIB board.

View of ZBIB	ZBIB connectors	Cables from QOIA
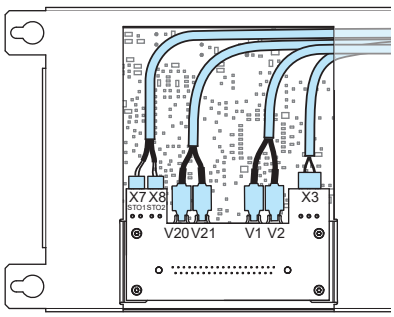	X7 (STO 1)	INU STO
	X8 (STO 2)	INU STO
	V20	V8
	V21	V13
	V1	V7
	V2	V2
	X3	X2

5. Connect the grounding wire.

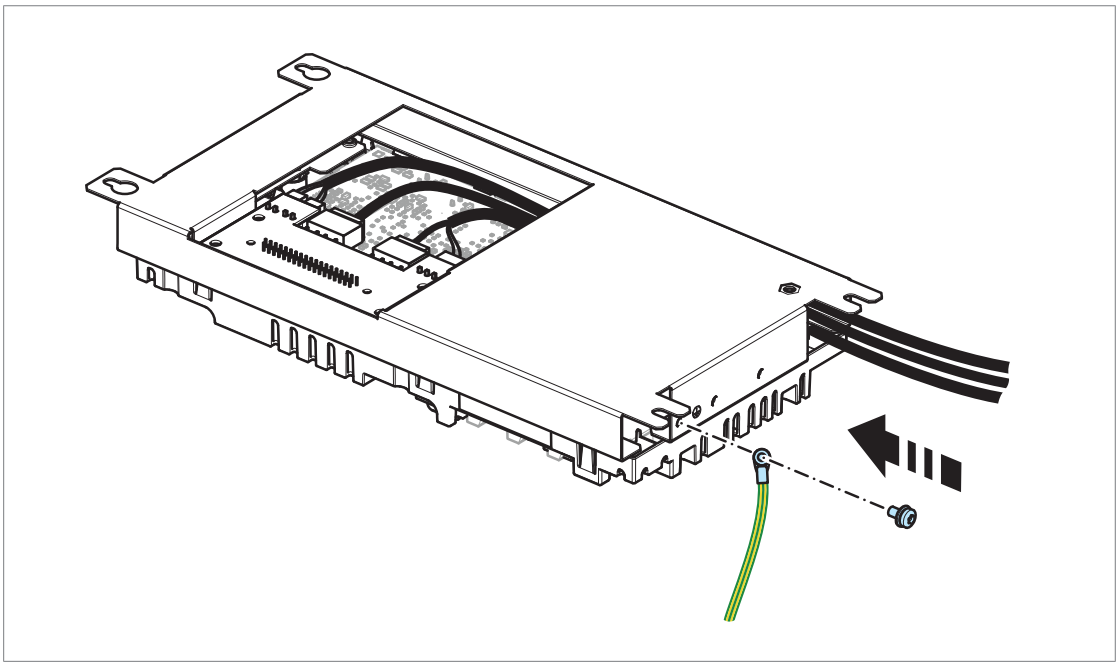

6. The kit includes a plate for the customer cable screens. Attach the small bracket (a) first, then the full clamp plate (b).

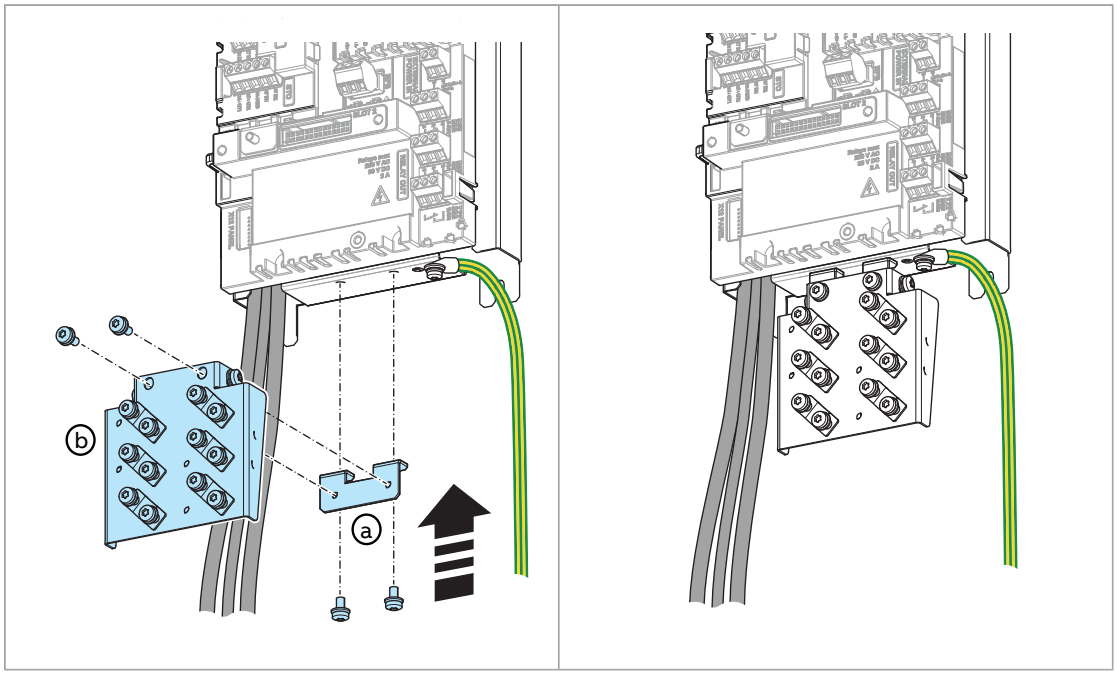

7. Use the mounting template and a pen to make marks on the installation surface. Then drill the holes and install the mounting screws. Make sure that debris from drilling does not go into the drive or control unit.

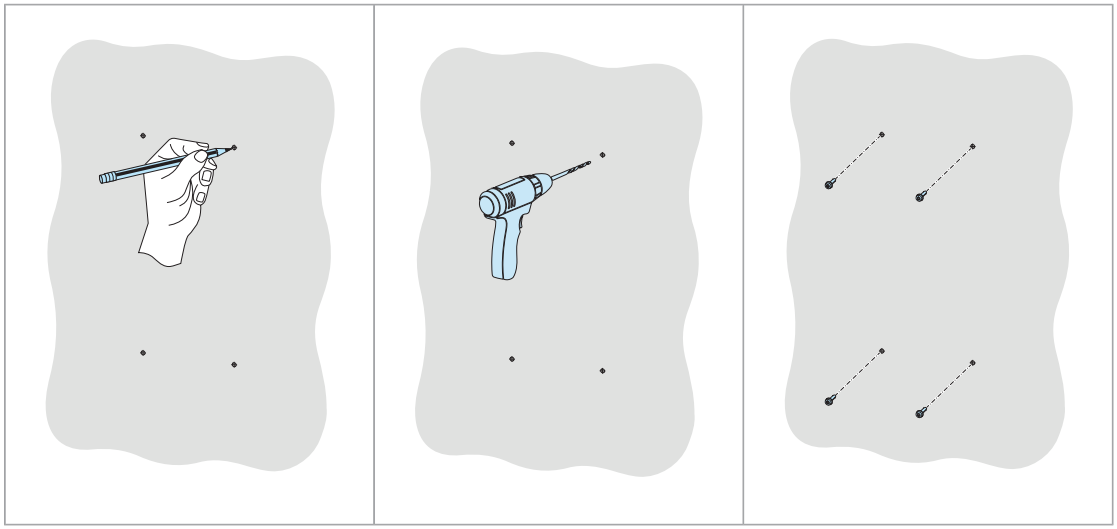

8. Lift the control unit onto the mounting screws. Tighten the screws.

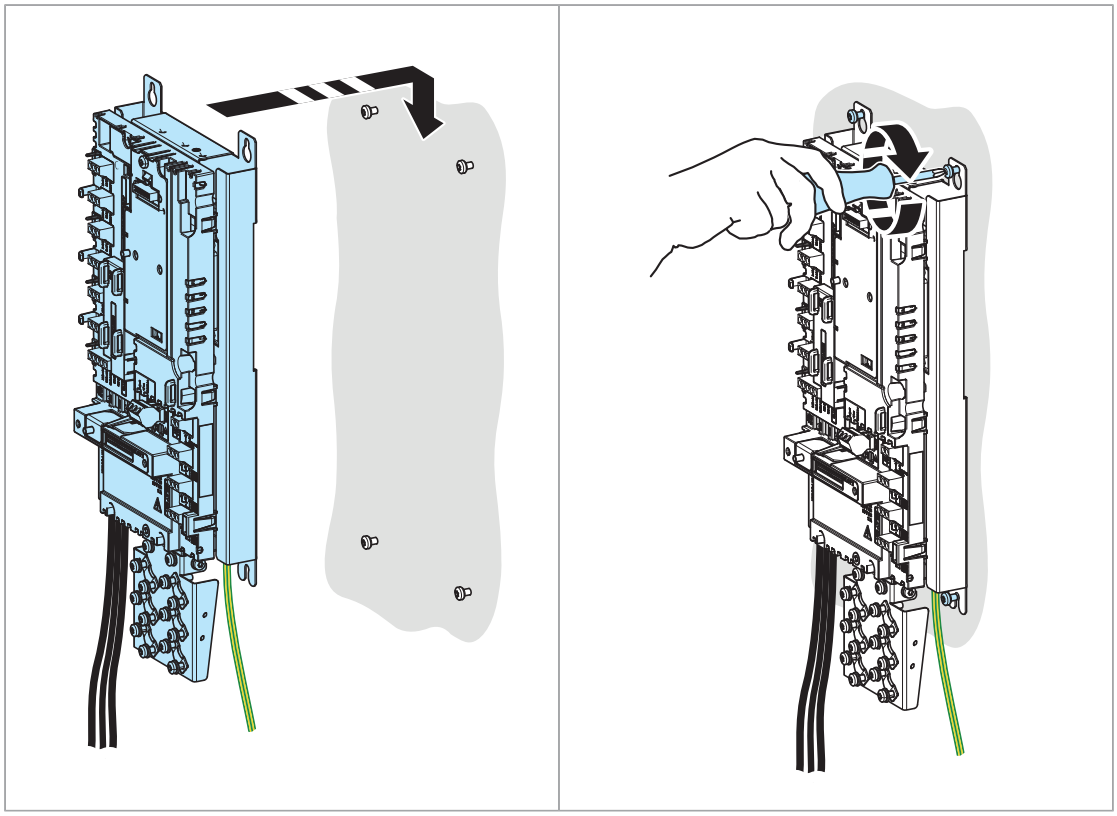

9. Attach the optional modules.
10. Ground the shields of the control cables at the clamp plate. The shields should be continuous as close to the terminals of the control unit as possible. Only remove the outer jacket of the cable at the cable clamp so that the clamp presses on the bare shield. The shield (especially in case of multiple shields) can also be terminated with a lug and fastened with a screw at the clamp plate. Leave the other end of the shield unconnected or ground it indirectly via a few nanofarads high-frequency capacitor, eg, 3.3 nF / 630 V. The shield can also be grounded directly at both ends if they are in the same ground line with no significant voltage drop between the end points. Tighten the screws to secure the connection.

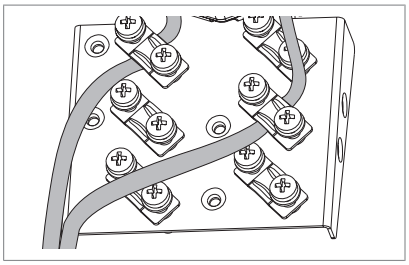

11. Connect the conductors to the appropriate detachable terminals of the control unit. See the default I/O diagram in chapter Control unit (Page 113). Use shrink tubing or insulating tape to contain any stray strands. Tighten the screws to secure the connection.
    Keep any signal wire pairs twisted as close to the terminals as possible. Twisting the wire with its return wire reduces disturbances caused by inductive coupling.

Connecting the control unit to the drive module

1. Remove the middle front cover of the the drive module. A view of drive module with optional clear plastic shrouds is shown below.
2. Remove the cover plate from the control cable entry and put the rubber grommet in its place. Put the control cables through the grommet.

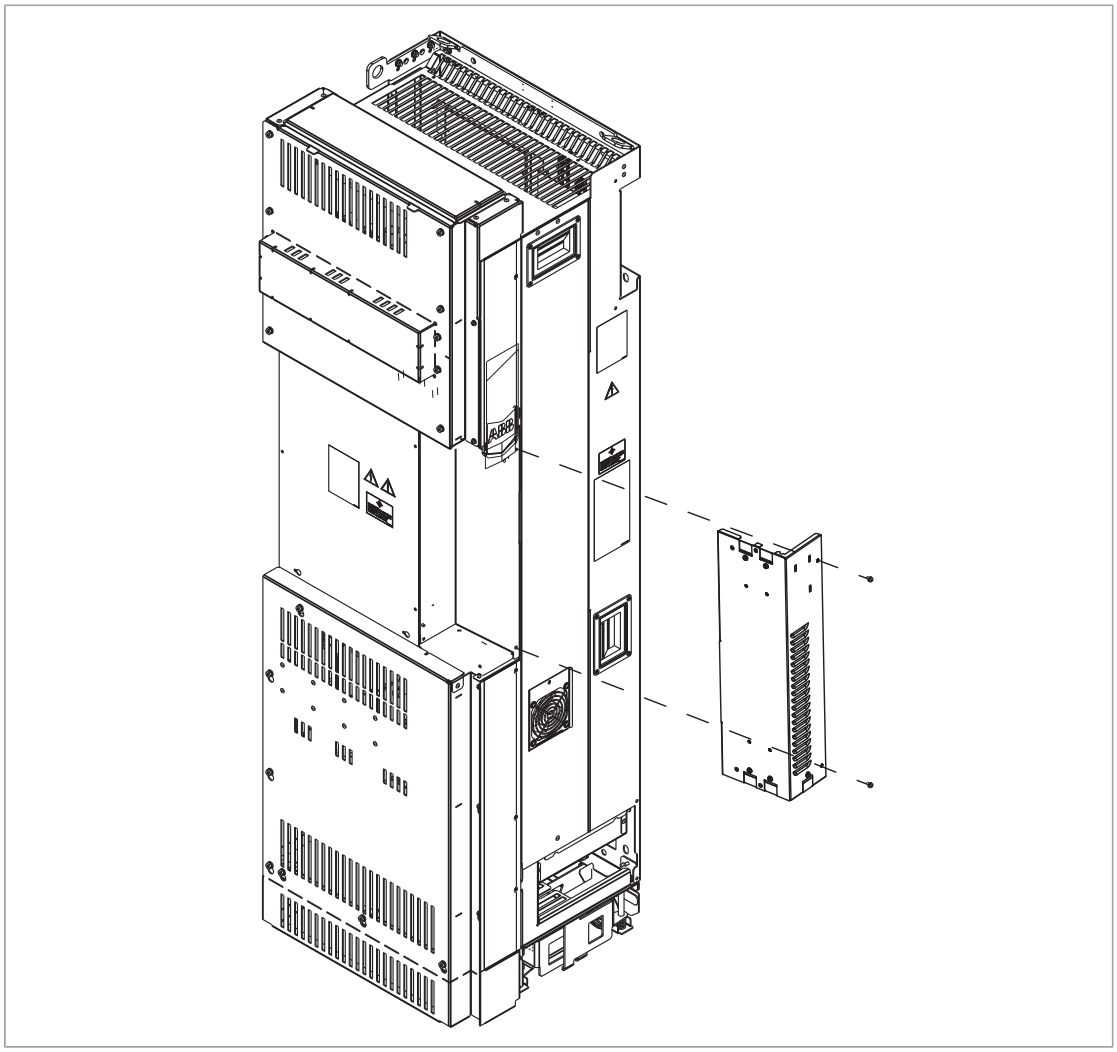

3. Connect the control cables to the drive module. Make sure that the cables are not against sharp edges or bare live parts. Use the holes on top and bottom of the cover to tie the control cables using cable ties.

WARNING!
Obey these instructions. If you ignore them, equipment malfunction and damage to the fiber optic cables can occur.

- Handle the fiber optic cables with care.
- When you unplug the cables, always hold the connector, not the cable itself.
- Do not touch the ends of the fibers with bare hands as the ends are extremely sensitive to dirt.
- Do not bend the fiber optic cables too tightly. The minimum allowed bend radius is 35 mm (1.4 in).

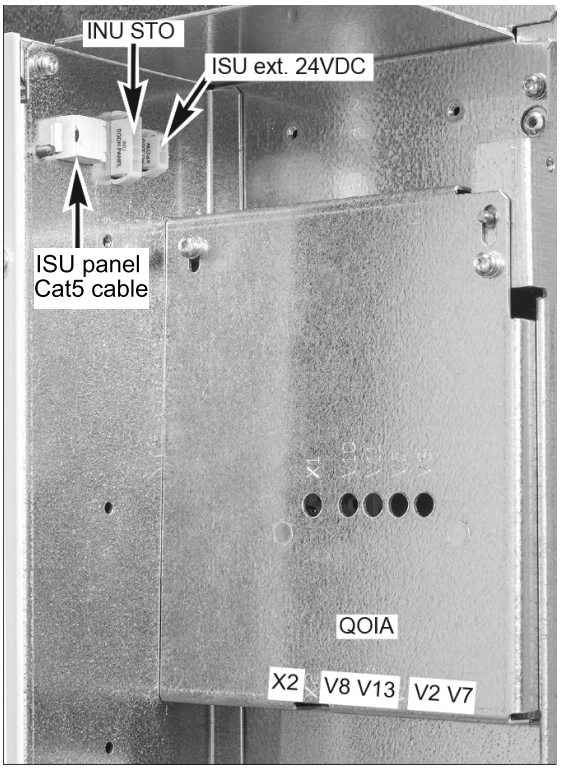

QOIA	ZBIB
INU STO	X7 (STO1)
	X8 (STO2)
X2	X3
V2	V2
V7	V1
V8	V20
V13	V21

Note: ISU ext. 24VDC connector is for supplying external 24 V DC to the line-side converter control unit if needed. ISU panel connector is for connecting the control panel to the line-side converter control unit if needed.

4. Connect the ground connection at the drive module end.

Dimension drawing

The dimensions are in millimeters and [inches].

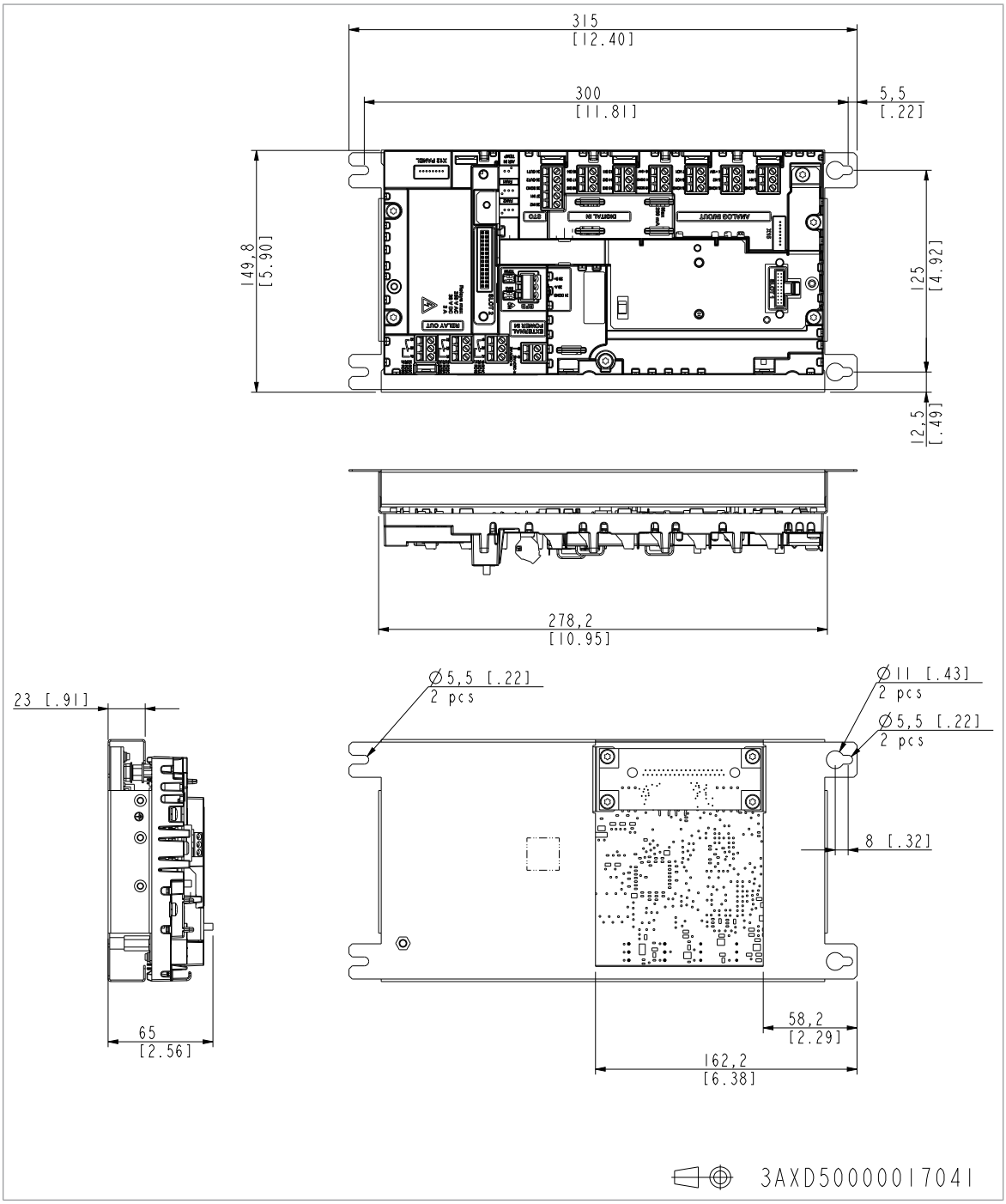

12

Installation into a Rittal VX25 enclosure

Contents of this chapter

This chapter gives an installation example of the drive module in a 800 mm wide Rittal VX25 enclosure with Rittal parts, alternative ABB parts and needed customer-made parts. For control cable installation, see chapter Electrical installation (Page 97).

This chapter also includes references on how to install the drive module with ready-made ABB installation kits into a Rittal VX25 enclosure.

Limitation of liability

The installation must always be designed and made according to applicable local laws and regulations. ABB does not assume any liability whatsoever for any installation which breaches the local laws and/or other regulations. Furthermore, if the recommendations given by ABB are not followed, the drive may experience problems that the warranty does not cover.

- **North America**

Installations must be compliant with NFPA 70 (NEC)[1)] and/or Canadian Electrical Code (CE) along with state and local codes for your location and application.

[1)] National Fire Protection Association 70 (National Electric Code).

Installation into a Rittal VX25 enclosure with ready-made ABB installation kits

A supplement to this manual, ACH580-34, ACQ580-34, ACS880-14 and ACS880-34 drive modules installation in Rittal VX25 enclosure supplement (3AXD50000815838 [English]), gives instructions on how to install the drive module and additional equipment into a Rittal VX25 400 mm + 800 mm wide enclosure. The installation uses ready-made ABB installation kits. The supplement contains dimension drawings,

ordering codes and an example set of circuit diagrams. The kits include their installation drawings.

ACH580-34, ACQ580-34, ACS880-14 and ACS880-34 drive modules installation in Rittal VX25 enclosure animation (3AXD50000883707 [English]) shows an example installation in detail.

Safety



WARNING!
Obey the safety instructions of the drive. If you ignore them, injury or death, or damage to the equipment can occur. If you are not a qualified electrical professional, do not do installation, commissioning or maintenance work.

Necessary parts

Drive module standard parts		
• Drive module and LCL filter module • Fastening brackets (2 pcs) • Pedestal guide plates (2 pcs) • Telescopic extraction/installation ramp • Fastening screws and insulators in a plastic bag		
Rittal parts / Alternative ABB parts		
Rittal part code	**Qty (pcs)**	**Description**
8806.000	1	Enclosure without bottom plates and side panels. Includes supports for installing air baffles.
7967.000 (one set = four pieces)	1	Spacers for roof plates / ABB roof
8100.743	1	Punched section with mounting flange, inner mounting level for 800 mm horizontal
Contact ABB for the suitable filter	4	Air filter. Remove the filter mats.
Alternative ABB parts for Rittal parts		
ABB air inlet kit 800 mm 3AUA0000117005 (IP20) 3AUA0000117009 (IP42)	2	See section Air inlet kits (Page 164)
ABB air outlet kit 800 mm 3AUA0000125203 (IP20) 3AUA0000114968 (IP42)	2	See section Air outlet kits (Page 166)
Customer-made parts (not ABB or Rittal products)		
Air baffles	4	See section Air baffles (Page 199)
Bottom plate	1	See section Bottom plate (Page 198)

Necessary tools

- Set of screw drivers (Torx and Pozidriv)
- Set of metric magnetic-end hexagon sockets

- Torque wrench
- Step drill bit for drilling the holes in the clear plastic shroud for input power cables (option +B051)

Overall flowchart of the installation process

Step	Task	For instructions, see
1	Install the Rittal parts, drive bottom guide plate and loose drive options in the drive module cubicle	Installing the drive module and LCL filter module into an enclosure (Page 137)
2	Install the auxiliary components (such as mounting plates, switches, busbars etc.)	The component manufacturer's instructions Preventing the recirculation of hot air (Page 57)
3	Attach the drive module and LCL filter module into the enclosure	Installing the drive module and LCL filter module into an enclosure (Page 137)
4	Connect the power cables and clear plastic shrouds to the drive module. Connect the power supply cable to the LCL filter cooling fan.	Connecting the motor cables and installing the shrouds (option +B051) (Page 138) Connecting the input cables and installing the shrouds (option +B051) (Page 139) Connecting the power cables (Page 101)
5	Install the remaining parts, for example, air baffles, cabinet doors, side plates, etc.	The component manufacturer's instructions

Installing the drive module and LCL filter module into an enclosure

See Installing the drive module and LCL filter module into a Rittal VX25 enclosure (Page 260).

Step	Tasks
Mechanical accessories	
1	Attach the plinth to the floor.
2	Attach the enclosure frame to the plinth.
3	Make the bottom plate with 360-degree grounding entries for power cables. Attach the bottom plate to the enclosure frame.
4	Attach the punched section to the back of enclosure frame.
5	Attach the mounting brackets to the punched section.
LCL filter module	
6	Install the pedestal to the LCL filter module.
7	Install the cooling fan to the LCL filter module.
8	Attach the LCL filter module pedestal guide plate to the enclosure bottom plate.
9	Attach the drive module pedestal guide plate to the enclosure bottom plate.
10	Attach the extraction/installation ramp to the LCL filter module pedestal guide plate.
11	To prevent the LCL filter module from falling, attach its lifting lugs with chains to the enclosure frame.

12	Push the LCL filter module carefully into the enclosure along the extraction/installation ramp. Work preferably with help from another person as shown below. Keep a constant pressure with one foot on the base of the module to prevent the module from falling on its back. 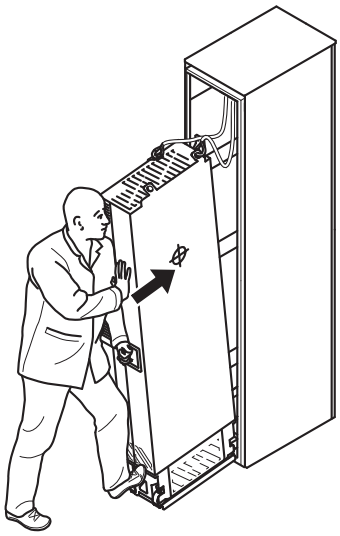
13	Unfasten the extraction/installation ramp and attach the LCL filter module to bottom plate.
Drive module	
14	Attach the extraction/installation ramp to the drive module pedestal guide plate.
15	Remove the sheeting from the clear plastic shrouds (option +B051) of the drive module from both sides.
16	Install the top metallic shroud to the drive module.
17	Install the back shrouds to the drive module.
18	To prevent the drive module from falling, attach its lifting lugs with chains to the enclosure frame.
19	Push the drive module carefully into the enclosure along the extraction/installation ramp. Work preferably with help from another person as shown above. Keep a constant pressure with one foot on the base of the module to prevent the module from falling on its back.
20	Unfasten the extraction/installation ramp and attach the drive module to the bottom plate.
LCL filter module and drive module attachments and intermediate electrical connections	
21	Attach the LCL filter module and drive module to the punched section.
22	Attach the LCL filter module to the side of drive module from top. Reinstall the cover.
23	Attach the drive module and LCL filter module to the bottom plate.
24	Connect the LCL filter busbars to the drive module busbars with the connecting busbars.
25	Attach the LCL filter module to the drive module side from bottom.
26	Connect the LCL filter fan power supply cable to connector FAN3:LCL.
Air baffles	
-	After the electrical installation has been done, install the air baffles. For instructions, see section Installing the air baffles (Page 141).

Connecting the motor cables and installing the shrouds (option +B051)

See Connecting the motor cables and installing the shrouds (Page 265).

Step	Tasks (motor cables)
1	Install the grounding terminal to the drive module base.

2	Run the motor cables to the enclosure. Ground the cable shields 360° at the enclosure entry.
3	Connect the twisted shields of the motor cables to the grounding terminal.
4	Screw in and tighten the insulators to the drive module by hand. Install the T3/W2 connection terminal to the insulators.  **WARNING!** Do not use longer screws or bigger tightening torque than given in the installation drawing. They can damage the insulator and cause dangerous voltage to be present at the module frame.
5	Connect the phase T3/W2 conductors to the T3/W2 terminal.
6	Install the T2/V2 connection terminal to the insulators. See the warning in step 4.
7	Connect the phase T2/V2 conductors to the T2/V2 connection terminal.
8	Install the T1/U2 connection terminal to the insulators. See the warning in step 4.
9	Connect the phase T1/U2 conductors to the T1/U2 terminal.
10	Remove the plastic sheeting from the motor cable clear plastic shroud (option +B051) from both sides.
11	Install the shroud (option +B051) on the motor cable connections.
12	Install the lower front cover to the drive module.
13	Drill holes for the power cables to the bottom clear plastic shrouds.
14	Remove the plastic sheeting from the bottom clear plastic shrouds.
15	Install the bottom first shroud on the motor cable entry.
16	Install the second shroud on the motor cable entry.

Connecting the input cables and installing the shrouds (option +B051)

See Connecting the input power cables and installing the shrouds (Page 268).

Step	Tasks (input cables)
1	Ground the input cable shields (if present) 360° at the enclosure entry.
2	Connect the twisted shields of the input cables and separate ground cable (if present) to the enclosure grounding busbar.
3	Step drill carefully sufficiently big holes to the entry clear plastic shroud for the cables to be connected. Align the holes in the vertical direction according to the alignment holes in the shroud. Smooth the hole edges. Remove the plastic sheeting from both sides of the shroud. Attach the cables firmly to the enclosure frame to prevent chafing against the hole edges.
4	Put the conductors of the input cables through the drilled holes in the clear plastic shroud.
5	For drive modules without option +H370: Connect the input cable conductors to the drive module L1/U1, L2/V1 and L3/W1 connection busbars. Go to step 12.
6	**Tasks with option +H370: Do steps 6 to 11.**
7	Screw in and tighten the insulators to the drive module by hand. Install the L1/U1 connection terminal to the insulators.  **WARNING!** Do not use longer screws or bigger tightening torque than given in the installation drawing. They can damage the insulator and cause dangerous voltage to be present at the module frame.
8	Connect the L1/U1 conductors to the L1/U1 connection terminal.

9	Install the L2/V1 connection terminal to the insulators. See the warning in step 5.
10	Connect the L2/V1 conductors to the L2/V1 connection terminal.
11	Install the L3/W1 connection terminal to the insulators. See the warning in step 5.
12	Connect the L3/W1 conductors to the L3/W1 connection terminal.
13	Install the side clear plastic shroud and the upper front cover of the drive module.
14	Install the entry clear plastic shroud (option +B051) and motor cable shroud (option +B051).
15	Install the top clear plastic shroud (option +B051) to the drive module.

Installing the air baffles

See:

- Step-by-step drawings for an installation example in Rittal VX25 800 mm wide enclosure (Page 259)
- Air baffles (Page 199).

Installing the roof and door (Rittal parts)

This drawing shows a layout tested by ABB.

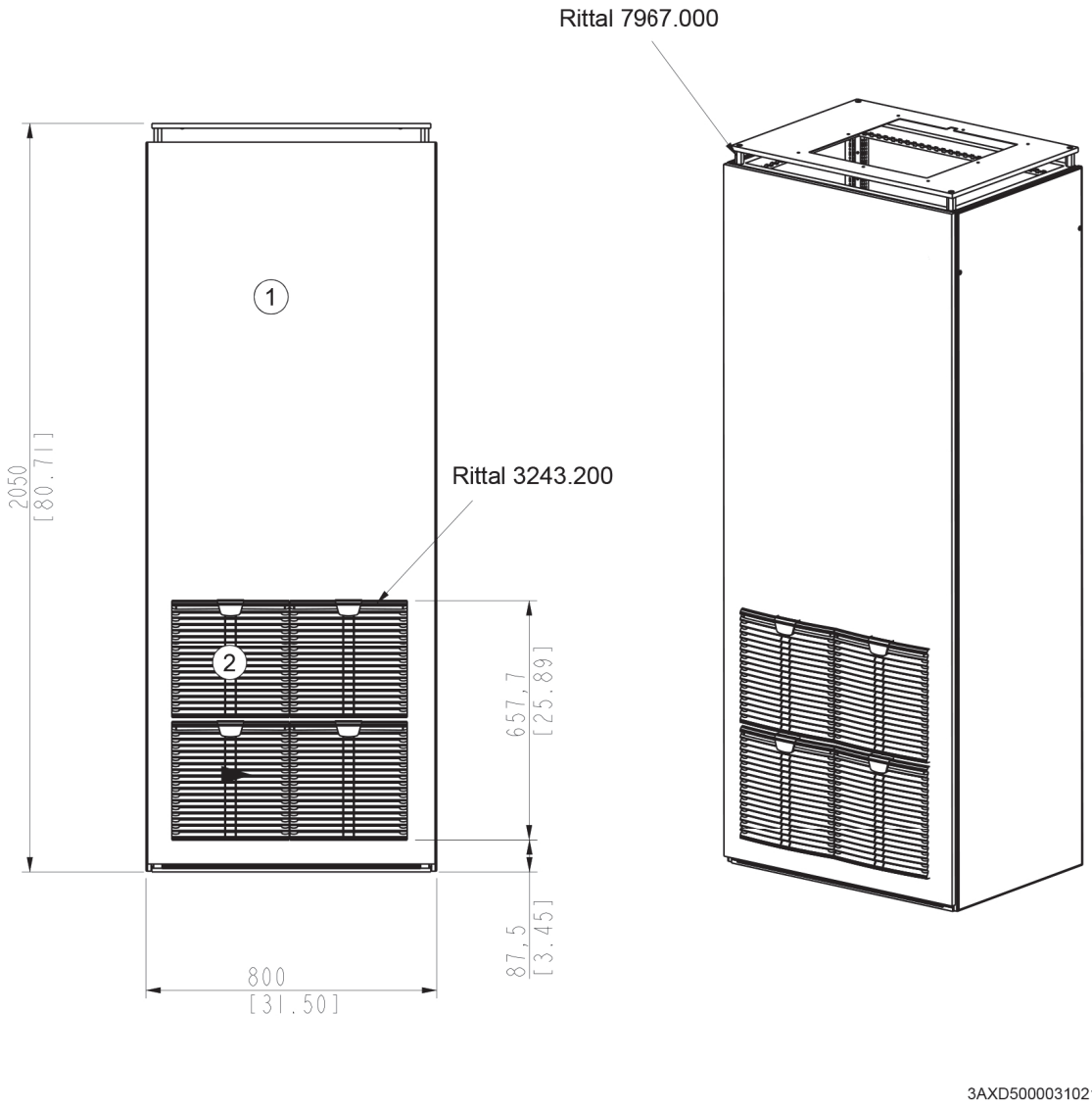

1	Door
2	Install these gratings as close to each other as possible. Remove the filter mats.

Removing the protective covering from the drive module and LCL filter module air outlet

WARNING!
Remove the protective covering from the top of the drive module after the installation. If the covering is not removed, the cooling air cannot flow freely through the module and the drive will overheat.

WARNING!
Remove the protective covering from the top of the LCL filter module after the installation. If the covering is not removed, the cooling air cannot flow freely through the module and the module will overheat.

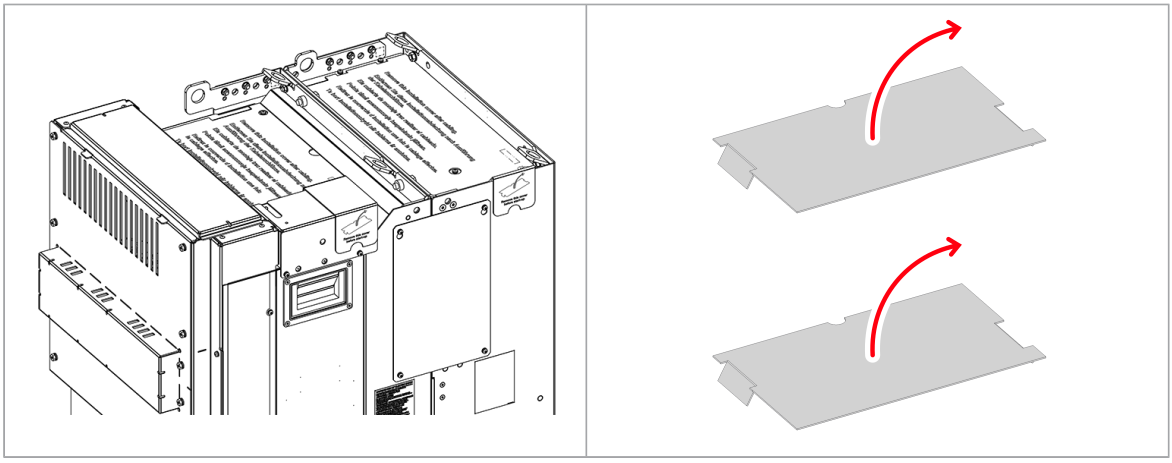

13

Installation checklist

Contents of this chapter

This chapter contains a checklist for the mechanical and electrical installation of the drive.

Checklist

Examine the mechanical and electrical installation of the drive before start-up. Go through the checklist together with another person.



WARNING!
Obey the safety instructions of the drive. If you ignore them, injury or death, or damage to the equipment can occur. If you are not a qualified electrical professional, do not do installation, commissioning or maintenance work.



WARNING!
Stop the drive and do the steps in section Electrical safety precautions (Page 21) before you start the work.

Make sure that ...	☑
The ambient operating conditions meet the drive ambient conditions specification and enclosure rating (IP code).	☐
The supply voltage matches the nominal input voltage of the drive. See the type designation label.	☐
The insulation resistance of the input power cable, motor cable and motor is measured according to local regulations and the manuals of the drive.	☐
The drive cabinet is attached to the floor, and if necessary due to vibration etc, also by its top to the wall or roof.	☐

Make sure that ...	☑
The drive module is fastened properly to the enclosure.	☐
The cooling air can flow freely in and out of the drive. Air recirculation inside the cabinet is not possible (air baffle plates are installed, or there is another air guiding solution).	☐
If the drive is connected to a network other than a symmetrically grounded TN-S system: You have done all the required modifications (for example, you may need to disconnect the EMC filter or ground-to-phase varistor). See the electrical installation instructions.	☐
The enclosures of the equipment in the cabinet have proper galvanic connection to the cabinet protective earth (ground) busbar; The connection surfaces at the fastening points are bare (un-painted) and the connections are tight, or separate grounding conductors have been installed.	☐
The main circuit connections inside the drive cabinet correspond to the circuit diagrams.	☐
The control unit has been connected. See the circuit diagrams.	☐
Appropriate AC fuses and main disconnecting device are installed.	☐
There is an adequately sized protective earth (ground) conductor(s) between the drive and the switchboard, the conductor is connected to correct terminal, and the terminal is tightened to the correct torque. Grounding has also been measured according to the regulations.	☐
The input power cable is connected to the correct terminals, the phase order is correct, and the terminals are tightened to the correct torque.	☐
There is an adequately sized protective earth (ground) conductor between the motor and the drive. The conductor is connected to the correct terminal, and the terminal is tightened to the correct torque. Grounding has also been measured according to the regulations.	☐
The motor cable is connected to the correct terminals, the phase order is correct, and the terminals are tightened to the correct torque.	☐
The motor cable is routed away from other cables.	☐
No power factor compensation capacitors are connected to the motor cable.	☐
The control cables are connected to the correct terminals, and the terminals are tightened to the correct torque.	☐
If a drive bypass connection will be used: The Direct On Line contactor of the motor and the drive output contactor are either mechanically and/or electrically interlocked, that is, they cannot be closed at the same time. A thermal overload device must be used for protection when bypassing the drive. Refer to local codes and regulations.	☐
There are no tools, foreign objects or dust from drilling inside the drive.	☐
The area in front of the drive is clean: the drive cooling fan cannot draw any dust or dirt inside.	☐
The terminal box cover of the motor is in place. Cabinet shrouds are in place and doors are closed.	☐
The motor and the driven equipment are ready for power-up.	☐

14

Start-up

Contents of this chapter

This chapter describes the start-up procedure of the drive.

Reforming the capacitors

The capacitors must be reformed if the drive has not been powered (either in storage or unused) for a year or more. The manufacturing date is on the type designation label. For information on reforming the capacitors, refer to Capacitor reforming instructions (3BFE64059629 [English]).

Start-up procedure

1. Only qualified electrical professionals are allowed to start-up the drive.
2. Make sure that the installation of the drive module has been checked according to the checklist in chapter Installation checklist, and that the motor and driven equipment are ready for start.
3. Perform the start-up tasks instructed by the cabinet-installer of the drive module.
4. Switch the power on, setup the drive control program, and perform the first start of the drive and motor. See ACH580 quick installation and start-up guide (3AXD50000047658 [English]) or ACH580 HVAC control program firmware manual (3AXD50000027537 [English]). If you need more information on the use of the control panel, see ACS-AP-I, -S, -W and ACH-AP-H, -W Assistant control panels user's manual (3AUA0000085685 [English]).
5. For drive modules in which the Safe torque off function is in use: Test and validate the operation of the Safe torque off function. See Validation test procedure (Page 211).

15

Fault tracing

Contents of this chapter

This chapter describes the fault tracing possibilities of the drive.

LEDs

- **Drive LEDs**

There is a green POWER and a red FAULT LED visible when the control panel is removed. If a control panel is attached to the drive, switch to remote control (otherwise a fault will be generated), and then remove the panel to be able to see the LEDs.

The table below describes the drive LED indications.

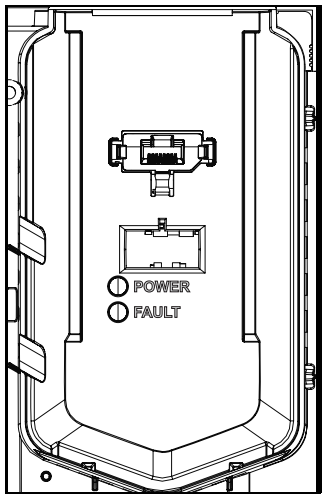

LEDs off	LED lit and steady		LED blinking	
No power	Green (POWER)	Power supply of the unit is on	Green (POWER)	Blinking: Drive in an alarm state Blinking for one second: Drive selected on the control panel when multiple drives are connected to the same panel bus.
	Red (FAULT)	Active fault in the drive. To reset the fault, press RESET from the control panel or switch off the drive power.	Red (FAULT)	Active fault in the drive. To reset the fault, switch off the drive power.

Control panel LEDs

The assistant control panel has one LED. For the meaning of the LED indications, see ACS-AP-I, -S, -W and ACH-AP-H, -W Assistant control panels user's manual (3AUA0000085685 [English]).

Warning and fault messages

See the quick installation and start-up guide or the firmware manual for the descriptions, causes and remedies of the control program warning and fault messages.

16

Maintenance

Contents of this chapter

This chapter contains maintenance instructions of the drive modules.

Maintenance intervals

The tables below show the maintenance tasks which can be done by the end user. The complete maintenance schedule is available on the Internet (new.abb.com/drives/services/maintenance/preventive-maintenance). For more information, consult your local ABB Service representative (www.abb.com/searchchannels).

The maintenance and component replacement intervals are based on the assumption that the equipment is operated within the specified ratings and ambient conditions. ABB recommends annual drive inspections to ensure the highest reliability and optimum performance.

Note: Long term operation near the specified maximum ratings or ambient conditions may require shorter maintenance intervals for certain components. Consult your local ABB Service representative for additional maintenance recommendations.

Descriptions of symbols

Action	Description
I	Inspection (visual inspection and maintenance action if needed)
P	Performance of on/off-site work (commissioning, tests, measurements or other work)
R	Replacement

Recommended annual maintenance actions by the user

ABB recommends these annual inspections to ensure the highest reliability and optimum performance.

Recommended annual actions by the user	Annually
Connections and environment	
Quality of supply voltage	P
Spare parts	
Spare parts	I
DC circuit capacitors reforming, spare modules and spare capacitors	P
Inspections by the user	
Tightness of terminals	I
Dustiness, corrosion and temperature	I
Heat sink cleaning	I

Recommended maintenance intervals after start-up

Component	Years from start-up						
	3	6	9	12	15	18	21
Cooling							
Main cooling fan							
Main cooling fan			R			R	
Auxiliary cooling fan							
Circuit board compartment cooling fans LONG-LIFE			R			R	
IP55 cooling fans			R			R	
Aging							
ZCU control unit battery (real-time clock)		R		R		R	
Control panel battery (real-time clock)			R			R	

4FPS10000239703

Recommended functional safety actions

Functional safety actions	
Safety function test interval	I
Safety component expiry (Mission time T_M) 20 years	R

Cleaning the interior of the cabinet



WARNING!
Obey the safety instructions of the drive. If you ignore them, injury or death, or damage to the equipment can occur. If you are not a qualified electrical professional, do not do installation, commissioning or maintenance work.



WARNING!
Use a vacuum cleaner with antistatic hose and nozzle, and wear a grounding wristband. Using a normal vacuum cleaner creates static discharges which can damage circuit boards.

1. Stop the drive and do the steps in section Electrical safety precautions (Page 21) before you start the work.
2. Open the cabinet door.
3. Clean the interior of the cabinet. Use a vacuum cleaner and a soft brush.
4. Clean the air inlets of the fans and air outlets of the modules (top).
5. Clean the air inlet gratings (if any) on the door.
6. Close the door.

Cleaning the interior of the heatsink

The module heatsink fins pick up dust from the cooling air. The drive runs into overtemperature warnings and faults if the heatsink is not clean.

WARNING!
Obey the safety instructions of the drive. If you ignore them, injury or death, or damage to the equipment can occur.

WARNING!
Use a vacuum cleaner with antistatic hose and nozzle, and wear a grounding wristband. Using a normal vacuum cleaner creates static discharges which can damage circuit boards.

1. Stop the drive and do the steps in section Electrical safety precautions (Page 21) before you start the work.
2. Make sure that the drive is disconnected from the power line and all other precautions described under Grounding (Page 23) have been taken into consideration.
3. Undo the attaching screws of the handle plate of the drive module.
4. Remove the handle plate.
5. Vacuum the interior of the heatsink from the opening.
6. Blow clean compressed air (not humid or oily) upwards from the opening and, at the same time, vacuum from the top of the drive module.

   Note: If there is a risk of dust entering adjoining equipment, perform the cleaning in another room.
7. Reinstall the handle plate.

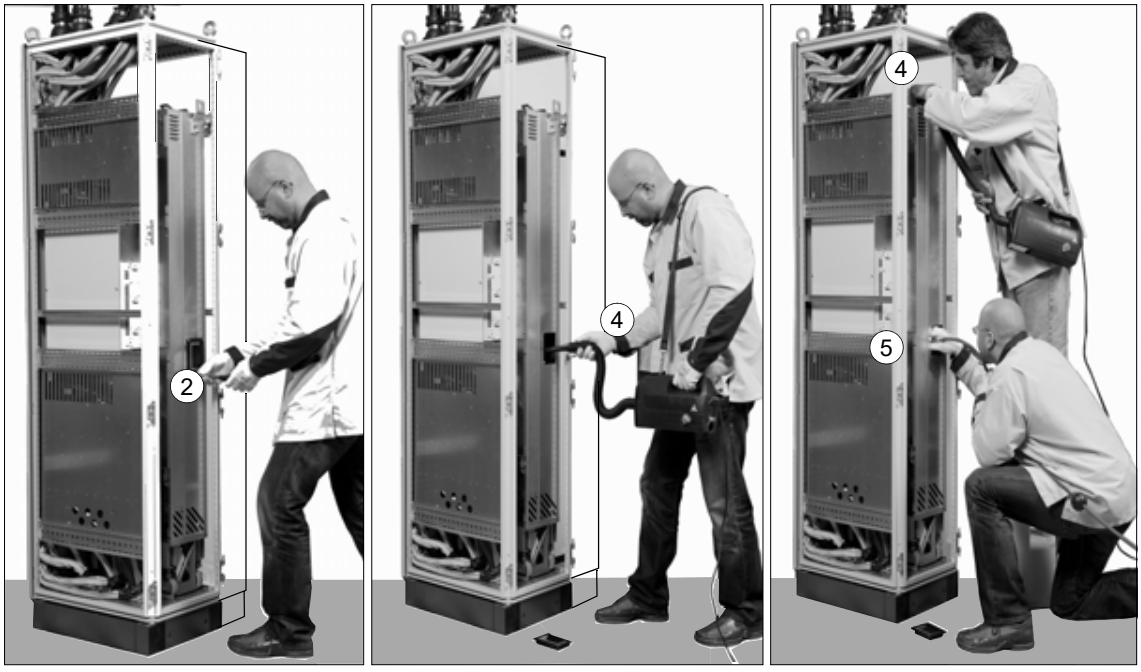

Cleaning the interior of the LCL filter

Clean the interior of the LCL filter in the same way as the heatsink in section Cleaning the interior of the heatsink (Page 152).

Fans

The lifespan of the cooling fans of the drive depends on running time, ambient temperature and dust concentration. See the firmware manual for the actual signal which indicates the running time of the cooling fan. Reset the running time signal after fan replacement.

Replacement fans are available from ABB. Do not use other than ABB-specified spare parts.

Replacing the auxiliary cooling fans of the drive module

WARNING!
Obey the safety instructions of the drive. If you ignore them, injury or death, or damage to the equipment can occur.

Fan in the front panel:

1. Stop the drive and do the steps in section Electrical safety precautions (Page 21) before you start the work.
2. Loosen the mounting screw of the fan cassette.
3. Disconnect the power supply cable of the fan.
4. Undo the mounting screws of the fan.
5. Install the new fan in reverse order. Make sure that the arrow in the fan points to the drive module.
6. Reset the counter (if used) in group 5 in the drive control program.

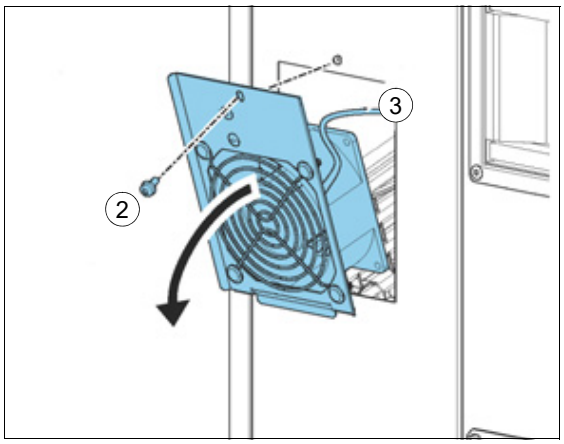

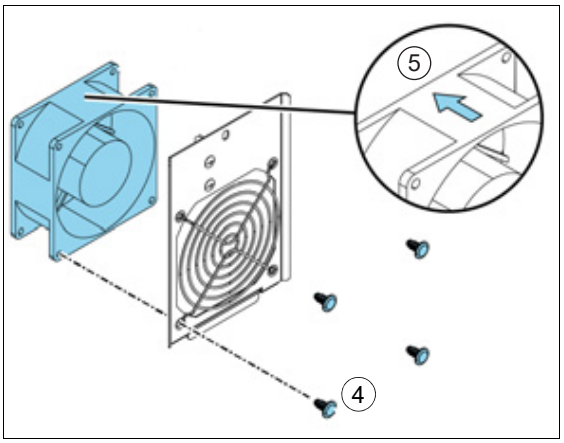

Fan at the bottom of the circuit board compartment:

1. Stop the drive and do the steps in section Electrical safety precautions (Page 21) before you start the work.
2. Loosen the mounting screw of the fan cassette.
3. Pull the fan cassette out.
4. Disconnect the power supply cable of the fan.
5. Undo the mounting screws of the fan.
6. Install the new fan in reverse order. Make sure that the arrow in the fan points up.
7. Reset the counter (if used) in group 5 in the drive control program.

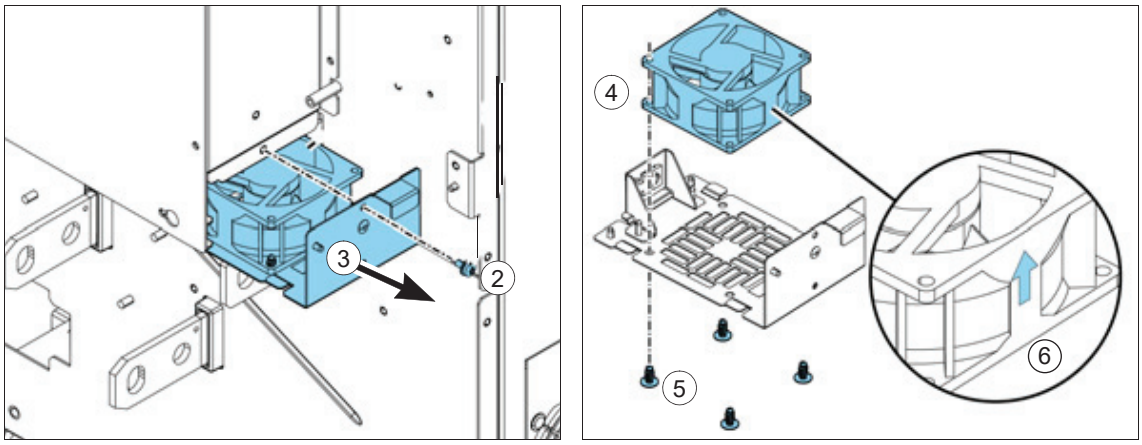

Replacing the drive module main cooling fans

WARNING!
Obey the safety instructions of the drive. If you ignore them, injury or death, or damage to the equipment can occur.

1. Stop the drive and do the steps in section Electrical safety precautions (Page 21) before you start the work.
2. Disconnect the power supply wires of the fans from the connector. FAN1:PWR1 and FAN2:PWR2.
3. Loosen the mounting screws of the fan cassette.
4. Pull the fan cassette out.
5. Loosen the mounting screws of the fan(s).
6. Install the new fans in reverse order.
7. Reset the counter (if used) in group 5 in the drive control program.

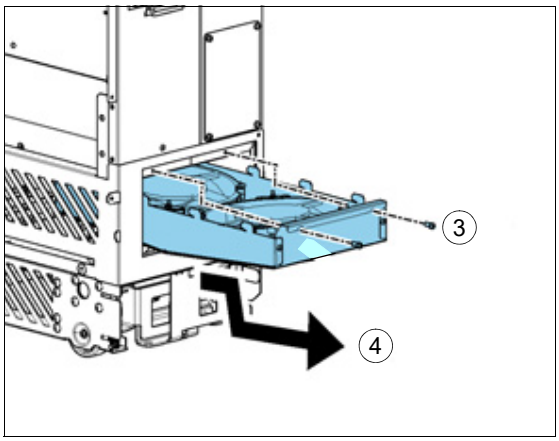

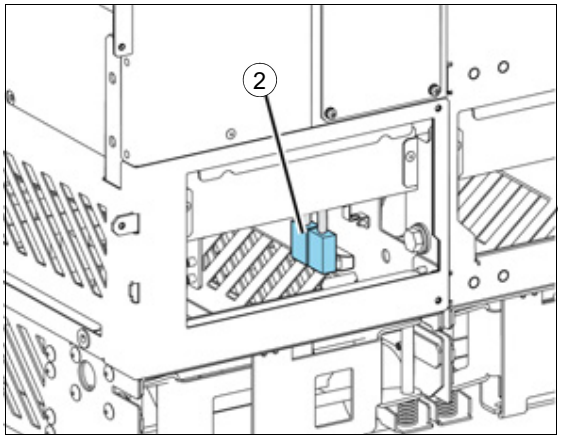

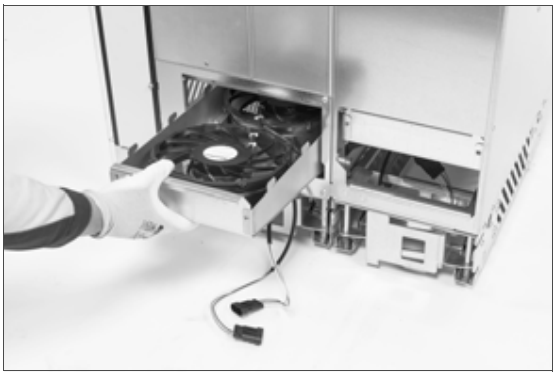

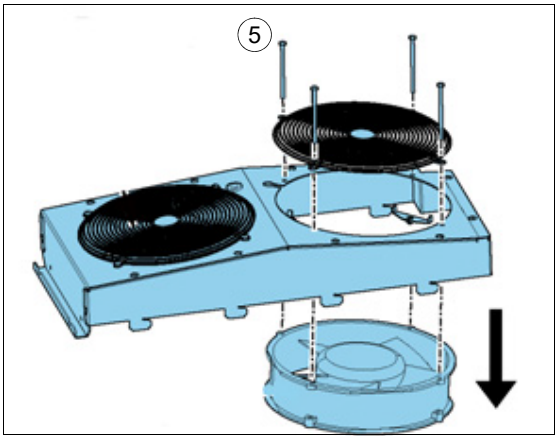

Replacing the LCL filter module cooling fan

WARNING!
Obey the safety instructions of the drive. If you ignore them, injury or death, or damage to the equipment can occur.

1. Stop the drive and do the steps in section Electrical safety precautions (Page 21) before you start the work.
2. Disconnect the power supply wire of the fan from connector FAN3:LCL.
3. Loosen the attaching screw of the fan cassette.
4. Pull the fan cassette out.
5. Loosen the mounting screws of the fan. The finger guard of the fan is attached by the same screws and is removed at the same time. Keep the finger guard for reuse.
6. Install the new fan in reverse order. Make sure that the arrow in the fan points up.

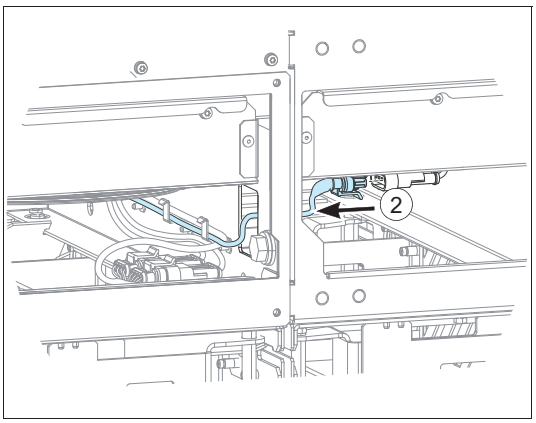

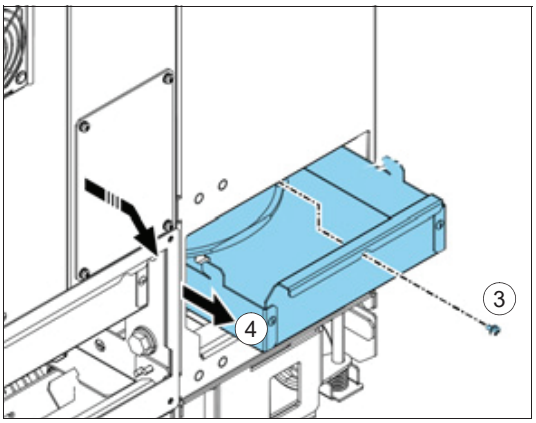

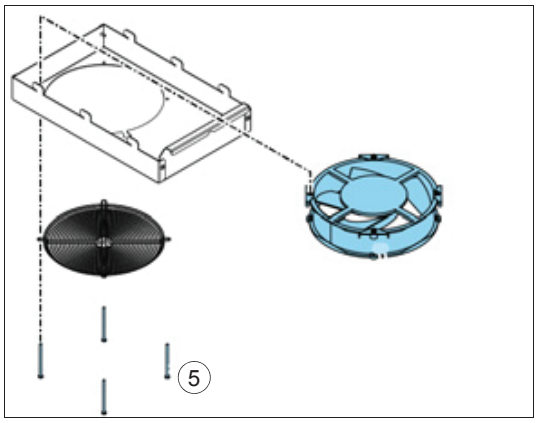

Replacing the standard drive module

WARNING!
Obey the safety instructions of the drive. If you ignore them, injury or death, or damage to the equipment can occur.

Handle the drive module carefully:

- Use safety shoes with a metal toe cap to prevent foot injury.
- Lift the drive module only by the lifting lugs.
- Make sure that the module does not fall over when you move it on the floor. To open the support legs, press each leg a little down and turn it aside (1, 2). Whenever possible secure the module also with chains.
- Do not tilt the drive module. It is heavy and its center of gravity is high. The module overturns from a sideways tilt of 5°. Do not leave the module unattended on a sloping floor.

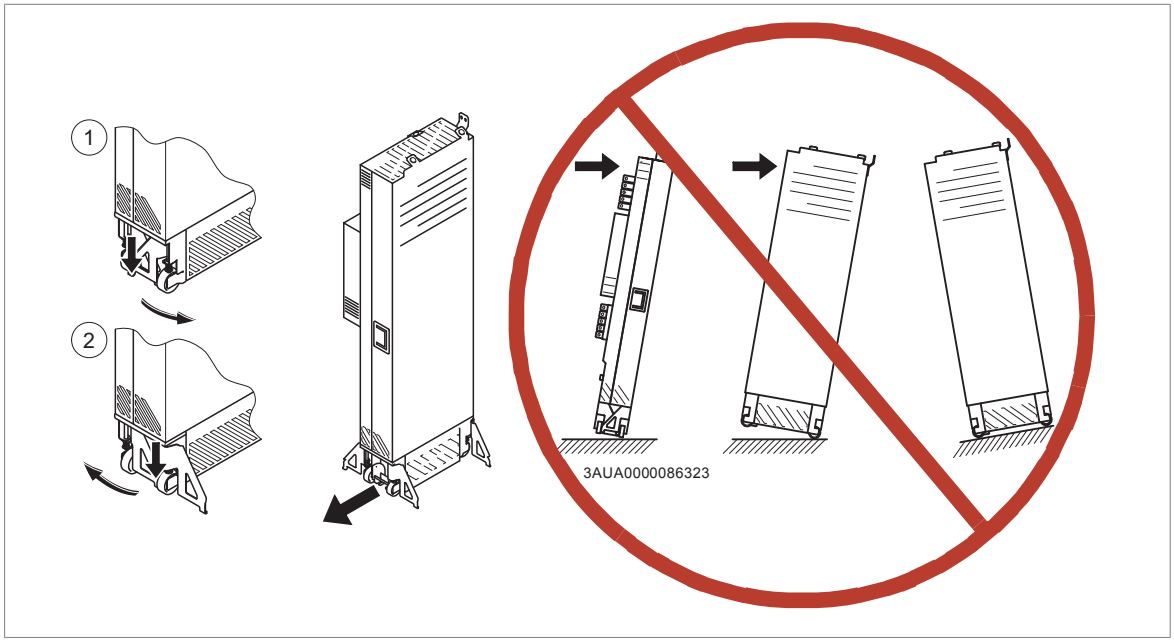

1. Stop the drive and do the steps in section Electrical safety precautions (Page 21) before you start the work.
2. Remove the clear plastic shrouds on the power cables and parts in front of the drive module (if present).
3. Disconnect the power cables.
4. Disconnect the external control cables connected to the control unit.

5. Disconnect the cooling fan power supply cable from the LCL filter module. Pull the cable inside the drive module.

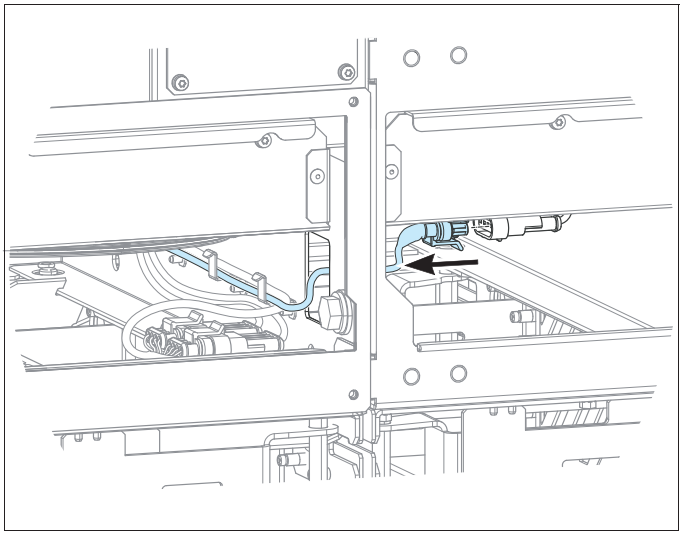

6. Remove the screws that attach the drive module to the cabinet at the top and behind the front support legs.
7. Remove the screws that connect the drive module to the LCL filter module from top and at the side.
8. To prevent the drive module from falling, attach its top lifting lugs with chains to the cabinet frame.
9. To open the support legs 90°, press each leg a little down and turn it aside.
10. Adjust the extraction/installation ramp to the correct height and attach it to the cabinet base with the two mounting screws.

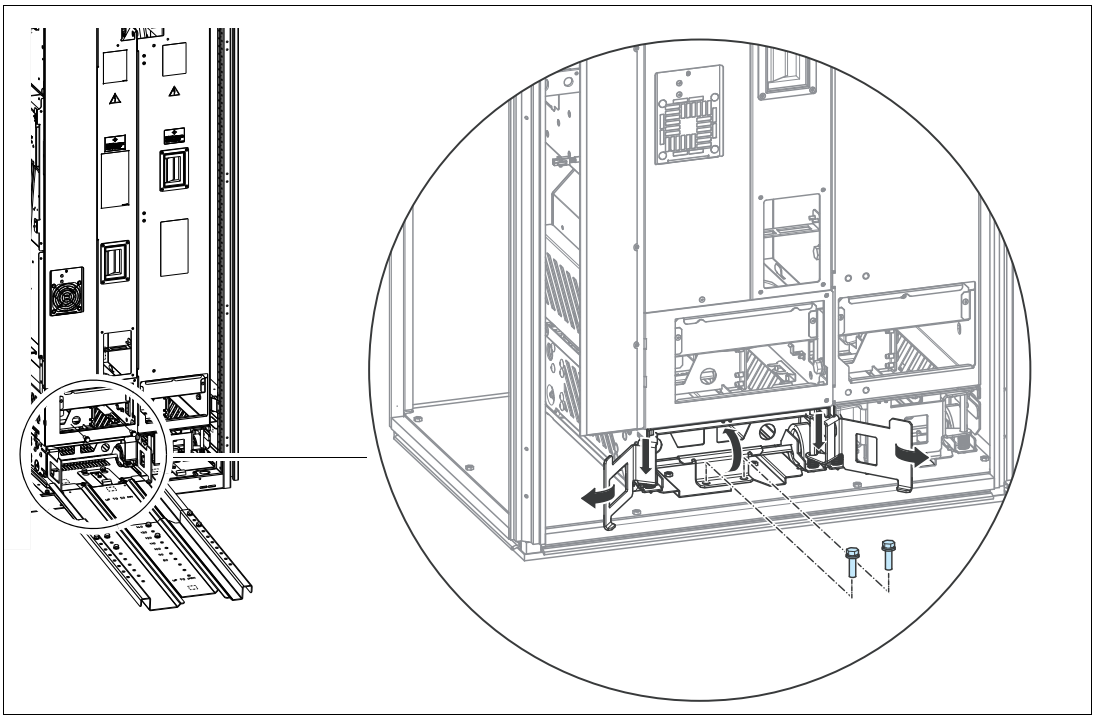

11. Pull the drive module carefully out of the cabinet preferably with help from another person.



12. Install the new module in reverse order.

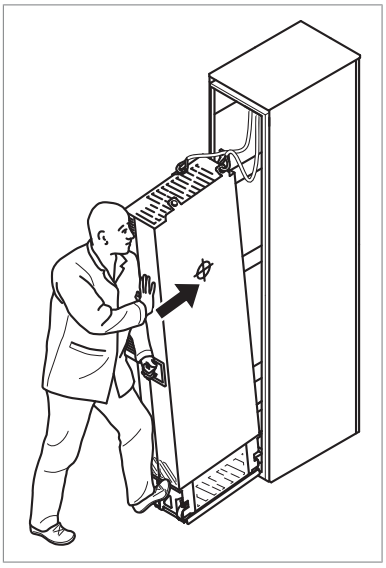

Replacing the LCL filter module

Replace the LCL filter module in the same way as the drive module.

Capacitors

The intermediate DC circuit of the drive contains several electrolytic capacitors. Operating time, load, and surrounding air temperature have an effect on the life of

the capacitors. Capacitor life can be extended by decreasing the surrounding air temperature.

Capacitor failure is usually followed by damage to the unit and an input cable fuse failure, or a fault trip. If you think that any capacitors in the drive have failed, contact ABB.

Reforming the capacitors

The capacitors must be reformed if the drive has not been powered (either in storage or unused) for a year or more. The manufacturing date is on the type designation label. For information on reforming the capacitors, refer to Capacitor reforming instructions (3BFE64059629 [English]).

Control panel

Refer to ACS-AP-I, -S, -W and ACH-AP-H, -W Assistant control panels user's manual (3AUA0000085685 [English]).

Replacing the ZCU-12 control unit battery

The ZCU-12 control unit in R11 frames produced after week 13 2022 does not have a battery in it. For earlier revisions of the control unit, contact ABB service center for instructions on how to replace the control battery.

Replacing the memory unit of the line-side converter control unit (ZCU-12)

1. Stop the drive and do the steps in section Electrical safety precautions (Page 21) before you start the work.
2. Remove the cover on the memory unit.
3. Pull the memory unit out.
4. Install the new memory unit in reverse order.

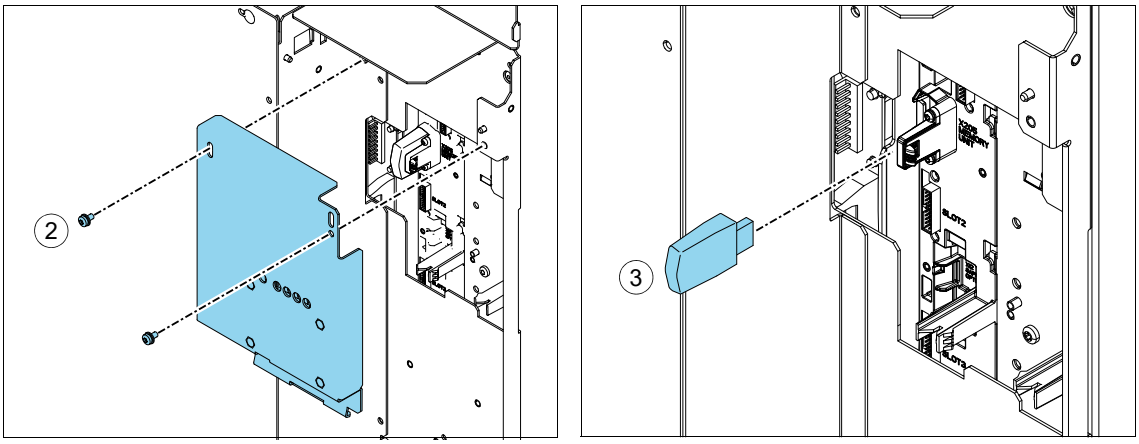

Functional safety components

The mission time of functional safety components is 20 years which equals the time during which failure rates of electronic components remain constant. This applies to the components of the standard Safe torque off circuit as well as any modules, relays and, typically, any other components that are part of functional safety circuits.

The expiry of mission time terminates the certification and SIL/PL classification of the safety function. The following options exist:

- Renewal of the whole drive and all optional functional safety module(s) and components.
- Renewal of the components in the safety function circuit. In practice, this is economical only with larger drives that have replaceable circuit boards and other components such as relays.

Note that some of the components may already have been renewed earlier, restarting their mission time. The remaining mission time of the whole circuit is however determined by its oldest component.

Contact your local ABB service representative for more information.

17

Ordering information

Contents of this chapter

This chapter gives ordering information on additional components available from ABB for the drive module installation.

Note: This chapter only lists the installation accessories available from ABB. All other parts must be sourced from a third party by the system integrator.

Control panel options

The control panel can be mounted on the cabinet door with the help of a door mounting kit.

For more information on the control panel, see ACS-AP-I, -S, -W and ACH-AP-H, -W Assistant control panels user's manual (3AUA0000085685 [English]).

Type	Description	Ordering code	Illustration
ACH-AP-W	Control panel with Bluetooth and Hand-Off-Auto operation logic	3AXD50000030360	
ACS-AP-W	Control panel with Bluetooth and Starts/Stop, Local/Remote operation logic	3AXD50000025965	

Type	Description	Ordering code	Illustration
DPMP-01	Door mounting kit for flush mounting. Includes a control panel mounting platform, an IP54 cover and a 3- meter panel connection cable.	3AUA0000108878	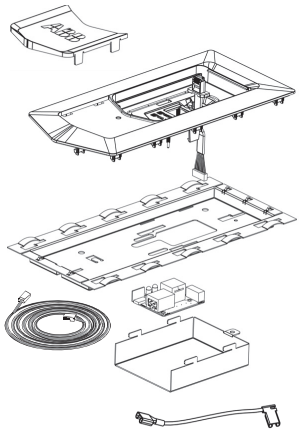

Brake choppers and resistors

See chapter Resistor braking (Page 223).

Output (d*u*/d*t*) filters

See section d*u*/d*t* filters (Page 233).

Cabinet ventilation

Air inlet kits

Mounting screws are included.

Enclosure width / Degree of protection	Kit code	Ordering code	Illustration
800 mm / IP20	A-8-X-023	3AUA0000117005	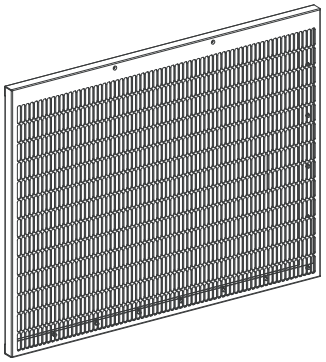 Instruction code: 3AUA0000116887

Enclosure width / Degree of protection	Kit code	Ordering code	Illustration
800 mm / IP42	A-8-X-026	3AUA0000117009	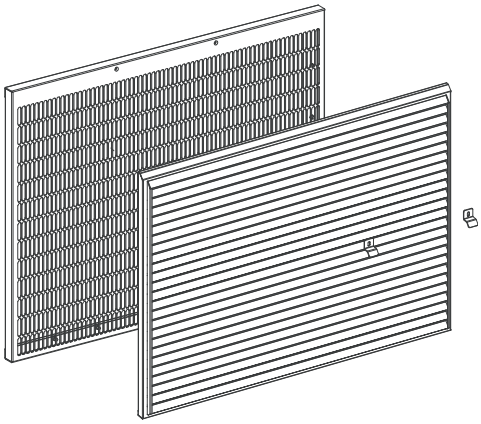 Instruction code: 3AUA0000116875
800 mm / IP54	A-8-X-029	3AXD50000009186	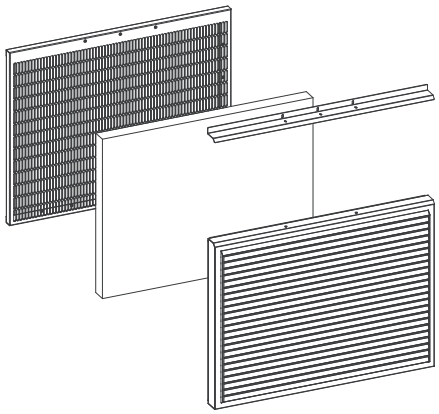 Instruction code: 3AXD50000010001

Air outlet kits

Enclosure width / Degree of protection	Qty	Kit code	Ordering code	Illustration
800 mm / IP20	2	A-4-X-062	3AUA0000125201	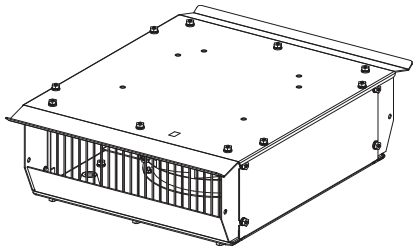 Instruction code: 3AXD50000001982 **Note:** Fan to be ordered separately
800 mm / IP42	2	A-4-X-060	3AUA0000114967	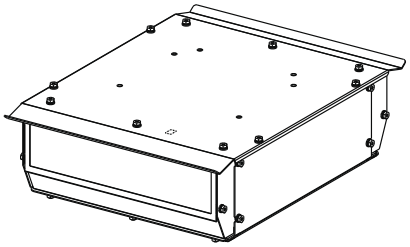 Instruction code: 3AUA0000115290 **Note:** Fan to be ordered separately
800 mm / IP54 (IEC)	2	A-4-X-064	3AXD50000009187	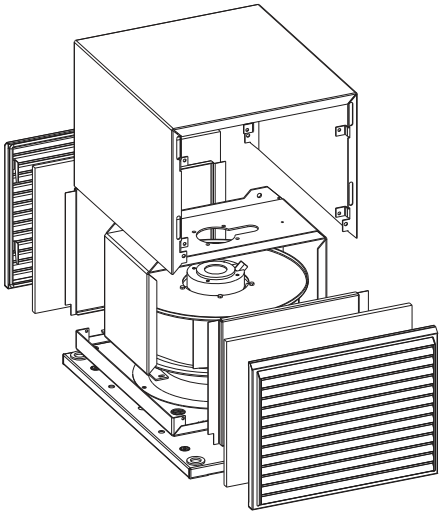 Instruction code: 3AXD50000010284 **Note:** Fan to be ordered separately

Enclosure width / Degree of protection	Qty	Kit code	Ordering code	Illustration
800 mm / IP54 (UL)	2	A-4-X-067	3AXD50000010362	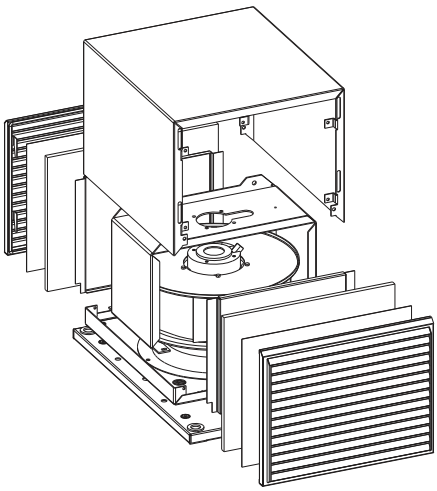 Instruction code: 3AXD50000010284 **Note:** Fan to be ordered separately
800 mm / IP31	2	A-4-X-068	3AXD50000944088	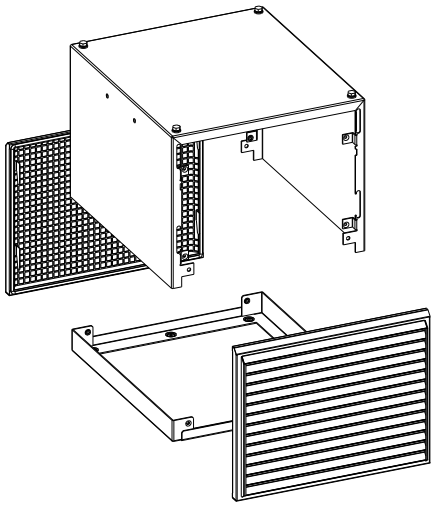 Instruction code: 3AXD50000944712 **Note:** No fan available for this kit

Cooling fans

Two cooling fans must be installed inside the air outlet compartment to ensure sufficient cooling of the cabinet.

Enclosure width / Degree of protection	Component		Qty	Ordering code
	Name	Data		
800 mm / IP20, IP42	Fan	R2E225-RA92-17 (230 V)	2	3AXD50000000514
	Capacitor	MSB MKP 3,5/603/E1679	2	3AXD50000000882
	Connector	SPB2,5/7 (2.5 mm^2, 12AWG)	2	3AXD50000000723
	Connector	SC 2,5-RZ/7 (2.5 mm^2, 12AWG)	2	3AXD50000000724

Enclosure width / Degree of protection	Component		Qty	Ordering code
	Name	Data		
800 mm / IP54	Fan	RB4C-355/170	2	3AXD50000006934
	Capacitor	MSB MKP 6/603/E1679	2	3AXD50000006959
	Connector	SPB2,5/7 (2.5 mm^2, 12AWG)	2	3AXD50000000723
	Connector	SC 2,5-RZ/7 (2.5 mm^2, 12AWG)	2	3AXD50000000724

Control panel mounting platforms

Kit	Ordering code
DPMP-04 control panel mounting platform	3AXD50000217717
DPMP-05 control panel mounting platform	3AXD50000240319

Retrofit accessory kits

Kit	Option code	Ordering code
Common mode filter kit (included as standard)	+E208	3AXD50000026145
Full size cable connection terminals for input power cables	+H370	3AXD50000019542

18

Technical data

Contents of this chapter

This chapter contains the technical specifications of the drive, for example, the ratings, sizes and technical requirements, provisions for fulfilling the requirements for CE and other markings.

Electrical ratings

IEC ratings

ACH580-34-...	Frame	Input rating[1)]	Max. current	Output ratings					
				Nominal use		Light-duty use		Heavy-duty use	
		I_1	I_{max}	I_2	P_n	I_{Ld}	P_{Ld}	I_{Hd}	P_{Hd}
		A	A	A	kW	A	kW	A	kW
3-phase U_n = 400 V									
246A-4	R11	212	350	246	132	234	132	206	110
293A-4	R11	257	418	293	160	278	160	246	132
365A-4	R11	321	498	365	200	347	200	293	160
442A-4	R11	401	621	442	250	420	250	365	200
505A-4	R11	401	631	505	250	480	250	365	200
585A-4	R11	505	751	585	315	556	315	442	250
650A-4	R11	569	859	650	355	618	355	505	250
3-phase U_n = 480 V									
246A-4	R11	209	350	240	200	240	200	180	150
293A-4	R11	233	418	260	200	260	200	240	200
365A-4	R11	307	498	361	300	361	300	302	250

ACH580-34-...	Frame	Input rating[1)]	Max. current	Output ratings					
				Nominal use		Light-duty use		Heavy-duty use	
		I_1	I_{max}	I_2	P_n	I_{Ld}	P_{Ld}	I_{Hd}	P_{Hd}
		A	A	A	kW	A	kW	A	kW
442A-4	R11	363	621	414	350	414	350	361	300
505A-4	R11	363	631	414	350	414	350	361	300
585A-4	R11	389	751	430	350	430	350	414	350
650A-4	R11	441	859	483	400	483	400	430	350

UL (NEC) ratings

ACH580-34-...	Frame	Input rating[1)]	Max. current	Output ratings					
				Nominal use		Light-duty use		Heavy-duty use	
		I_1	I_{max}	I_2	P_n	I_{Ld}	P_{Ld}	I_{Hd}	P_{Hd}
		A	A	A	kW	A	kW	A	kW
3-phase U_n = 480 V									
240A-4	R11	209	350	240	200	240	200	180	150
302A-4	R11	258	498	302	250	302	250	240	200
361A-4	R11	307	542	361	300	361	300	302	250
414A-4	R11	363	614	414	350	414	350	361	300
477A-4	R11	418	704	477	400	477	400	414	350

1) When the DC voltage is boosted, the drive can draw more input current than shown on the type designation label. This is the case when the motor is running continuously at or near the field weakening area and when the drive is running at or near nominal load. It can be a result of certain combinations of DC voltage boost levels and drive-type-specific derating curves.

The rise in input current can heat the input cable and fuses. To avoid heating, select an input cable and fuses according to the increased input current caused by the DC voltage boost. For more information, refer to ACH580-31, ACQ580-31, ACH580-34 and ACQ580-34 drives product note on DC voltage boost (3AXD50000769407 [English]).

1) When the DC voltage is boosted, the drive can draw more input current than shown on the type designation label. This is the case when the motor is running continuously at or near the field weakening area and when the drive is running at or near nominal load. It can be a result of certain combinations of DC voltage boost levels and drive-type-specific derating curves.

The rise in input current can heat the input cable and fuses. To avoid heating, select an input cable and fuses according to the increased input current caused by the DC voltage boost. For more information, refer to ACH580-31, ACQ580-31, ACH580-34 and ACQ580-34 drives product note on DC voltage boost (3AXD50000769407 [English]).

Definitions

U_n	Nominal voltage of the drive
I_1	Nominal input current (rms) at 40 °C (104 °F)
I_{max}	Maximum output current. Available for 2 seconds at start, otherwise as long as allowed by drive temperature. 140% … 200% of I_{Hd}, depending on power rating.
I_2	Continuous rms output current. No overload capability at 40 °C (104 °F).

P_n	Typical motor power in no-overload use. The kilowatt ratings apply to most IEC 4-pole motors. The horsepower ratings apply to most NEMA 4-pole motors.
I_{Ld}	Continuous rms output current allowing 10% overload for 1 minute every 10 minutes when parameter 97.02 Minimum switching frequency is set to 2 kHz or less.
P_{Ld}	Typical motor power in light-duty use. The kilowatt ratings apply to most IEC 4-pole motors. The horsepower ratings apply to most NEMA 4-pole motors.
I_{Hd}	Continuous rms output current allowing 50% overload for 1 minute every 10 minutes when parameter 97.02 Minimum switching frequency is set to 2 kHz or less.
P_{Hd}	Typical motor power in heavy-duty use. The kilowatt ratings apply to most IEC 4-pole motors. The horsepower ratings apply to most NEMA 4-pole motors.
Note: To achieve the rated motor power given in the table, the rated current of the drive must be higher than or equal to the rated motor current. The power ratings apply to most IEC 34 motors at the nominal voltage of the drive. ABB recommends to select the drive, motor and gear combination for the required motion profile with the DriveSize dimensioning tool available from ABB.	

Sizing

Drive sizing is based on the rated motor current and power. To achieve the rated motor power given in the table, the rated current of the drive must be higher than or equal to the rated motor current. Also the rated power of the drive must be higher than or equal to compared to the rated motor power. The power ratings are the same regardless of the supply voltage within one voltage range.

Note: ABB recommends the DriveSize dimensioning tool (available from (http://new.abb.com/drives/software-tools/drivesize) for selecting the drive, motor and gear combination.

Deratings

When is derating necessary

Derate the continuous output current of the drive if

- ambient temperature exceeds +40 °C (+104 °F) or
- drive is installed higher than 1000 m (3280 ft) above sea level
- the minimum requirements of motor cable length are not met (see Filters (Page 233)).

Note: The final derating factor is a multiplication of all applicable derating factors.

Surrounding air temperature derating

In the temperature range +40…50 °C (+104…122 °F), derate 1% for every 1 °C (1.8 °F): Calculate the output by multiplying the current given in the rating table by the derating factor (k, in the diagram below).

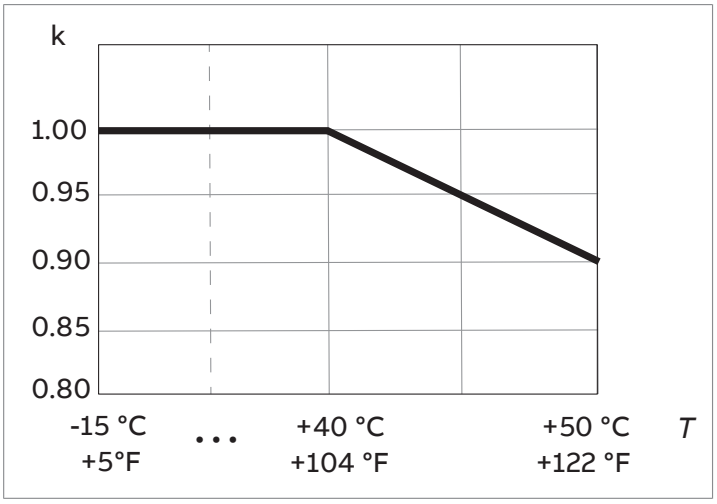

Altitude derating

At altitudes more than 1000 m (3281 ft) above sea level, the output current derating is 1 percentage point for every added 100 m (328 ft). For example, the derating factor for 1500 m (4921 ft) is 0.95. The maximum permitted installation altitude is given in the technical data.

If the surrounding air temperature is less than +40 °C (104 °F), the derating can be reduced by 1.5 percentage points for every 1 °C (1.8 °F) reduction in temperature. A few altitude derating curves are shown below.

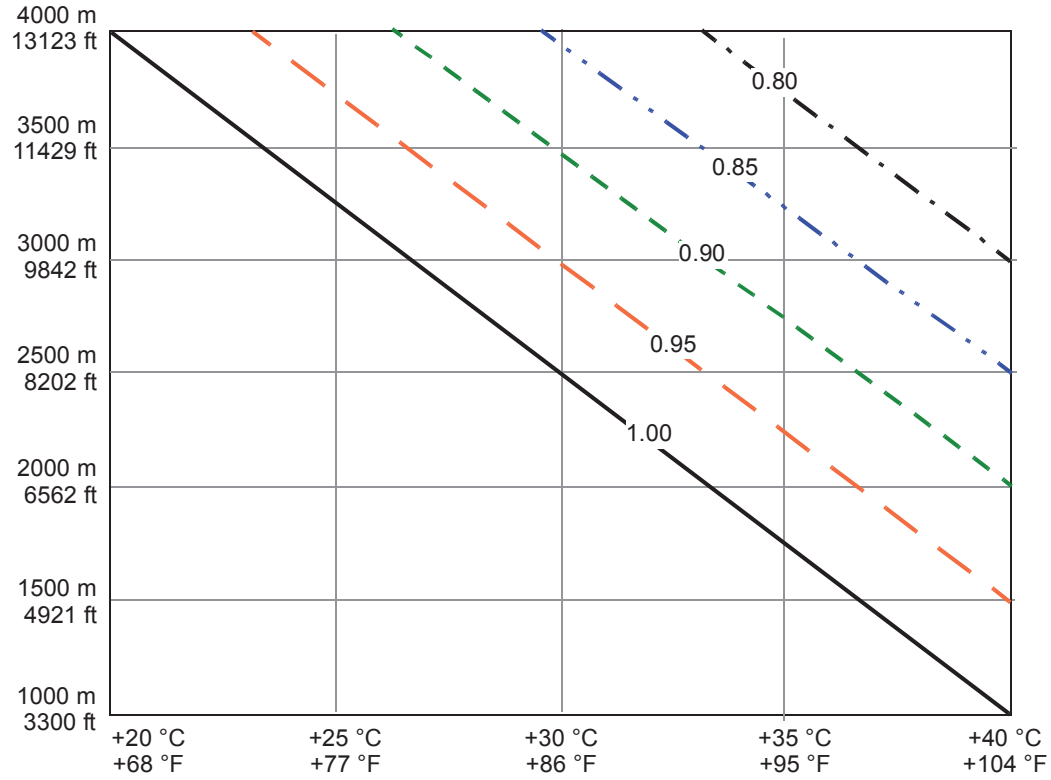

	Derating factor 1.00
	Derating factor 0.95
	Derating factor 0.90
	Derating factor 0.85
	Derating factor 0.80

For a more accurate derating, use the DriveSize PC tool.

To calculate the output current, multiply the current given in the rating table by derating factor *k* which for *x* meters and feet is:

$$k = 1 - \frac{x - 1000\ m}{10000\ m} \qquad k = 1 - \frac{x - 3281\ ft}{32810\ ft}$$

Switching frequency derating

To calculate the output current, multiply the current given in the rating table by the derating factor given in the table below.

Note: If you change the minimum switching frequency with parameter 97.02 Minimum switching frequency, derate according to the table below. Changing parameter 97.01 Switching frequency reference does not require derating.

IEC Ratings					
ACH580-34-...	**Derating factor (k) for the minimum switching frequencies**				**Frame**
	1 kHz	**2 kHz**	**4 kHz**	**8 kHz**	
3-phase U_n = 400 V					
246A-4	1.0	1.0	0.8	0.53	R11
293A-4	1.0	1.0	0.8	0.53	R11

IEC Ratings					
ACH580-34-...	**Derating factor (k) for the minimum switching frequencies**				**Frame**
	1 kHz	**2 kHz**	**4 kHz**	**8 kHz**	
365A-4	1.0	1.0	0.8	0.53	R11
442A-4	1.0	1.0	0.8	0.53	R11
505A-4	1.0	1.0	0.8	0.53	R11
585A-4	1.0	1.0	0.8	0.53	R11
650A-4	1.0	1.0	0.8	0.53	R11
3-phase U_n = 480 V					
246A-4	1.0	1.0	0.8	0.53	R11
293A-4	1.0	1.0	0.8	0.53	R11
365A-4	1.0	1.0	0.8	0.53	R11
442A-4	1.0	1.0	0.8	0.53	R11
505A-4	1.0	1.0	0.8	0.53	R11
585A-4	1.0	1.0	0.8	0.53	R11
650A-4	1.0	1.0	0.8	0.53	R11

UL (NEC) Ratings					
ACH580-34-...	**Derating factor (k) for the minimum switching frequencies**				**Frame**
	1 kHz	**2 kHz**	**4 kHz**	**8 kHz**	
3-phase U_n = 480 V					
240A-4	1.0	1.0	0.8	0.53	R11
302A-4	1.0	1.0	0.8	0.53	R11
361A-4	1.0	1.0	0.8	0.53	R11
414A-4	1.0	1.0	0.8	0.53	R11
477A-4	1.0	1.0	0.8	0.53	R11

Output voltage boost derating

The drive can output a higher motor voltage than the supply voltage. This can require derating of the drive output power depending on the difference between the supply voltage and the output voltage to the motor for continuous operation.

This graph shows the required derating for 400 V and 480 V drive types.

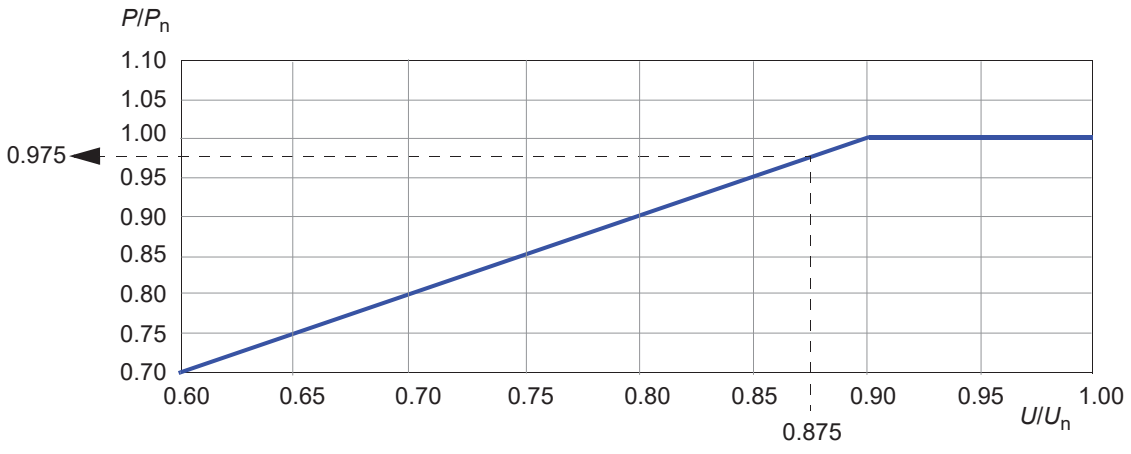

U	Input voltage of the drive
U_n	Nominal supply voltage of the drive
P	Derated output power of the drive
P_n	Nominal power rating of the drive

Example 1

For ACH580-34-650A-4 the input voltage (U) is 350 V, the nominal supply voltage (U_n) is 400 V, and the nominal power rating (P_n) is 355 kW.

Calculate the ratio between the input voltage and the required nominal supply voltage as follows: U/U_n = 350 V / 400 V = 0.875. From the graph we can see that P/P_n = 0.975.

Calculate the derated output power (P) as follows: 0.975 × 355 kW = 346 kW.

To boost the output voltage to correspond to the nominal supply voltage (U_n) of 400 V, increase the DC voltage to 400 V × √2 × 1.03 = 582.6 V.

Example 2

For ACH580-34-505A-4 the input voltage (U) is 450 V, the nominal supply voltage (U_n) is 480 V, and the nominal power rating (P_n) is 250 kW.

Calculate the ratio between the input voltage and the required nominal supply voltage as follows: U/U_n = 450 V / 480 V = 0.937. From the graph we can see that P/P_n = 1.00.

Calculate the derated output power (P) as follows: 1.00 × 250 kW = 250 kW.

To boost the output voltage to correspond to the nominal supply voltage (U_n) of 480 V, increase the DC voltage to 480 V × √2 × 1.03 = 699.2 V.

Fuses (IEC)

aR fuses by Bussmann for protection of the drive are listed below.

Drive type ACH580-34-	Input current (A)	Ultrarapid (aR, semiconductor) fuses					
		Min. short circuit current (A)	A	A^2s	V	Type DIN 43653	Size
U_n = 400 V, IEC							
246A-4	212	1500	400	74000	690	170M5408	2
293A-4	257	2200	500	145000	690	170M5410	2
365A-4	321	2600	630	210000	690	170M6410	3
442A-4	401	3100	700	300000	690	170M6411	3
505A-4	401	4000	800	465000	690	170M6412	3
585A-4	505	5400	1000	945000	690	170M6414	3
650A-4	569	5400	1000	945000	690	170M6414	3
U_n = 480 V, IEC							
246A-4	209	1100	315	42000	690	170M4410	1
293A-4	233	1500	400	74000	690	170M5408	2
365A-4	307	2200	500	145000	690	170M5410	2
442A-4	363	2600	630	210000	690	170M6410	3
505A-4	363	3100	700	300000	690	170M6411	3
585A-4	389	3100	700	300000	690	170M6411	3
650A-4	441	4000	800	465000	690	170M6412	3

Note:

- See also sections:
  - Protecting the drive and the input power cable in short-circuits (Page 91)
  - Protecting the drive against thermal overload (Page 91)
  - Protecting the input power cable against thermal overload (Page 92).
- In multicable installations, install only one fuse per phase (not one fuse per conductor).
- Fuses with higher current rating than the recommended ones must not be used. Fuses with lower current rating can be used.
- Fuses from other manufacturers can be used if they agree with the ratings and the melting curve of the fuse does not exceed the melting curve of the fuse mentioned in the table.

Calculating the short-circuit current of the installation

Make sure that the short-circuit current of the installation is at least the value given in the fuse table.

The short-circuit current of the installation can be calculated as follows:

$$I_{k2\text{-}ph} = \frac{U}{2 \cdot \sqrt{R_c^2 + (Z_k + X_c)^2}}$$

where

$I_{k2\text{-}ph}$	Short-circuit current in symmetrical two-phase short-circuit
U	Network line-to-line voltage (V)
R_c	Cable resistance (ohm)
Z_k	$Z_k = z_k \cdot U_n^2 / S_n$ = transformer impedance (ohm)
z_k	Transformer impedance (%)
U_n	Transformer rated voltage (V)
S_n	Nominal apparent power of the transformer (kVA)
X_c	Cable reactance (ohm)

Fuses (UL)

UL 248-13 Recognized fuses for branch circuit protection per NEC are listed below. Fuses are required as part of the installation. Fuses are not included in the base drive configuration and must be provided by others. Obey local regulations.

Drive type ACH580-34-	Input current (A)	Ultrarapid (aR, semiconductor) fuses						
		Min. short circuit current (A)	A	V	Type Flush End	Type DIN 43653	Type US Style	Type French Style
U_n = 480 V								
240A-4	209	1100	400	690	170M5408	170M5008	170M5608	170M5308
302A-4	258	1500	500	690	170M5410	170M5010	170M5610	170M5310
361A-4	307	2200	630	690	170M6410	170M6010	170M6610	170M6310
414A-4	363	2600	700	690	170M6411	170M6011	170M6611	170M6311
477A-4	414	3100	800	690	170M6412	170M6012	170M6612	170M6312

Note:

- See also sections:
  - Protecting the drive and the input power cable in short-circuits (Page 91)
  - Protecting the drive against thermal overload (Page 91)
  - Protecting the input power cable against thermal overload (Page 92).
- In multicable installations, install only one fuse per phase (not one fuse per conductor).
- Fuses with higher current rating than the recommended ones must not be used. Fuses with lower current rating can be used.
- Alternative fuses can be used if they meet certain characteristics. For acceptable fuses, see the manual supplement (3AXD50000645015).

Dimensions, weights and free space requirements

Standard drive module configuration (drive module + LCL filter module)								
Frame size	Height		Width		Depth		Weight	
	mm	in	mm	in	mm	in	kg	lb
R11	1726	67.93	648	25.50	508	20.00	435	959

Option selection +B051 and +H370 (drive module + LCL filter module)								
Frame size	Height		Width		Depth		Weight	
	mm	in	mm	in	mm	in	kg	lb
R11	1741	68.54	713	28.07	512	20.16	443	977

Drive module								
Frame size	Height		Width		Depth		Weight	
	mm	in	mm	in	mm	in	kg	lb
R11	1726	67.93	404	15.92	508	20.00	191	421

LCL filter module								
Frame size	Height		Width		Depth		Weight	
	mm	in	mm	in	mm	in	kg	lb
R11	1722	67.80	239	9.40	505	19.86	180	397

For requirements of free space around the drive module, see Required free space (Page 60).

Package

Drive package

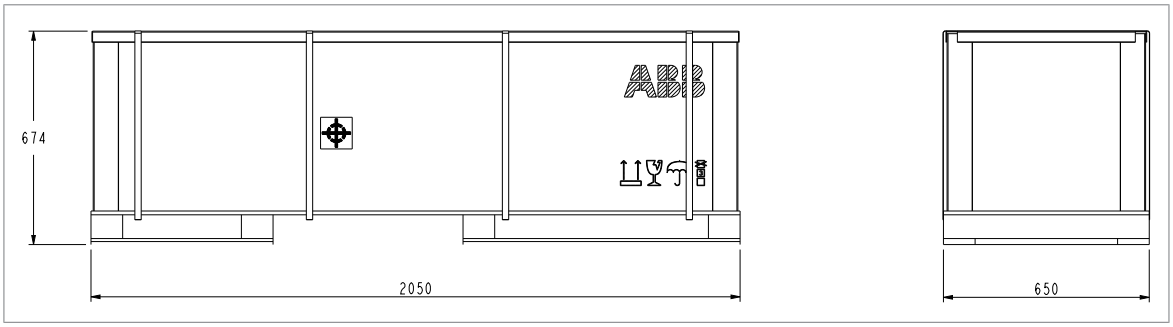

Weight: 36 kg (79 lb).

LCL filter module package

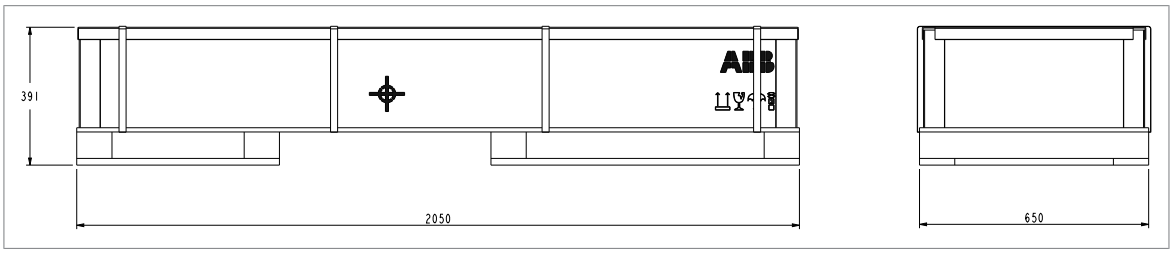

Weight: 32 kg (71 lb).

Losses, cooling data and noise

The air flow direction is from bottom to top.

This table shows typical heat loss values, required air flow and noise at the nominal ratings of the drive. The heat loss values can vary depending on voltage, cable conditions, motor efficiency and power factor. To obtain more accurate values for given conditions, use ABB DriveSize tool (http://new.abb.com/drives/software-tools/drivesize).

Drive type ACH580-34-	Frame size	Air flow		Heat dissipation	Noise
		m³/h	ft³/min	W	dB(A)
U_n = 400 V, IEC					
246A-4	R11	2100	1236	5280	72
293A-4	R11	2100	1236	6400	72
365A-4	R11	2100	1236	8000	72
442A-4	R11	2100	1236	10000	72
505A-4	R11	2100	1236	10000	72
585A-4	R11	2100	1236	12600	72
650A-4	R11	2100	1236	14200	72
U_n = 480 V, IEC					
246A-4	R11	2100	1236	5220	72
293A-4	R11	2100	1236	5220	72
365A-4	R11	2100	1236	7830	72
442A-4	R11	2100	1236	9135	72
505A-4	R11	2100	1236	9135	72
585A-4	R11	2100	1236	9135	72
650A-4	R11	2100	1236	10440	72
U_n = 480 V, UL (NEC)					
240A-4	R11	2100	1236	5280	72
302A-4	R11	2100	1236	6525	72
361A-4	R11	2100	1236	7830	72
414A-4	R11	2100	1236	9135	72
477A-4	R11	2100	1236	10440	72

These losses are not calculated according to IEC 61800-9-2.

The cooling air temperature rises 30 degrees Celsius when it goes through the drive module if the temperature of the input cooling air is 40 degrees Celsius and the drive is operating with nominal load.

Terminal and entry data for the power cables

The maximum accepted cable size is 4 × (3 × 240) mm² or 4 × (3 × 500 MCM). Screw size for connecting busbars to the drive module input and output busbars: M12, tightening torque 50…75 N·m (37…55 lbf·ft).

Typical power cables

The table below gives typical copper and aluminum cable types with concentric copper shield for the drives with nominal current. The value separated by the plus sign means the diameter of the PE conductor. See also section Terminal and entry data for the power cables (Page 180).

Drive type ACH580-34-	IEC [1]		UL (NEC) [2]
	Cu cable type	Al cable type	Cu cable type
	mm²	mm²	AWG/kcmil
U_n = 400 V, 480 V (IEC)			
246A-4	2 × (3 × 70 + 35)	2 × (3 × 95)	2 × 2/0
293A-4	2 × (3 × 95 + 50)	2 × (3 × 120)	2 × 3/0
365A-4	2 × (3 × 120 + 70)	2 × (3 × 185)	2 × 250 MCM
442A-4	2 × (3 × 150 + 70)	2 × (3 × 240)	2 × 400 MCM
505A-4	3 × (3 × 95 + 50)	3 × (3 × 150)	2 × 500 MCM or 3 × 250 MCM
585A-4	3 × (3 × 120 + 70)	3 × (3 × 185)	2 × 600 MCM or 3 × 300 MCM
650A-4	3 × (3 × 150 + 70)	3 × (3 × 240)	2 × 700 MCM or 3 × 350 MCM
U_n = 480 V, UL (NEC)			
240A-4	2 × (3 × 70 + 35)	2 × (3 × 95)	2 × 2/0
302A-4	2 × (3 × 95 + 50)	2 × (3 × 150)	2 × 4/0
361A-4	2 × (3 × 120 + 70)	2 × (3 × 185)	2 × 250 MCM
414A-4	2 × (3 × 150 + 70)	2 × (3 × 240)	2 × 350 MCM
477A-4	3 × (3 × 95 + 50)	3 × (3 × 150)	2 × 500 MCM or 3 × 250 MCM

1) The cable selection is based on max. 9 cables laid on a cable ladder side by side, three ladder type trays one on top of the other, ambient temperature 30 °C (86 °F) PVC insulation, surface temperature 70 °C (158 °F) (EN 60204-1 and IEC 60364-5-52). For other conditions, select the cables according to local safety regulations, appropriate input voltage and the load current of the drive.

2) The cable selection is based on NEC Table 310-16 for copper wires, 75 °C (167 °F) wire insulation at 40 °C (104 °F) ambient temperature. Not more than three current-carrying conductors in raceway or cable or earth (directly buried). For other conditions, dimension the cables according to local safety regulations, appropriate input voltage and the load current of the drive.

Temperature: For IEC, select a cable rated for at least 70 °C maximum permissible temperature of conductor in continuous use. For North America, power cables must be rated for 75 °C (167 °F) or higher.

Voltage: 600 V AC cable is accepted for up to 500 V AC.

Terminal data for the control cables

See section Technical data (Page 120).

Electrical power network specification

<table>
<tr><td>Voltage (U_1)</td><td>ACH580-34-xxxx-4 drive modules: 380…480 V AC 3-phase +10%…-15%. This is indicated in the type designation label as typical input voltage levels 3~400/480 V AC.</td></tr>
<tr><td>Network type</td><td>TN (grounded) and IT (ungrounded) systems</td></tr>
<tr><td>Rated conditional short-circuit current I_{cc} (IEC 61800-5-1)</td><td>Maximum allowable prospective short-circuit current is 100 kA when protected by the fuses given in the fuse table.</td></tr>
<tr><td>Maximum prospective short-circuit current rating (SCCR) (UL 61800-5-1, CSA C22.2 No. 274-17)</td><td>The drive is suitable for use on a circuit capable of delivering not more than 100 kA rms symmetrical amperes at 480 V maximum when protected by the fuses given in the fuse table.</td></tr>
<tr><td>Frequency (f_1)</td><td>50/60 Hz. Variation ±5% of nominal frequency.</td></tr>
<tr><td>Imbalance</td><td>Max. ± 3% of nominal phase to phase input voltage</td></tr>
<tr><td>Fundamental power factor (cos phi$_1$)</td><td>1.0 (at nominal load)</td></tr>
<tr><td>Harmonic distortion</td><td>Harmonics are below the limits defined in IEEE 519-2014, and G5/4. The drive complies with IEC 61000-3-2, IEC 61000-3-4 and IEC 61000-3-12.
The table below shows typical values of the drive for short-circuit ratio (I_{sc}/I_1) of 20 to 100. The values will be met if the supply network voltage is not distorted by other loads and when the drive operates at nominal load.
<table>
<tr><th>Nominal bus voltage V at PCC</th><th>THDi (%)</th><th>THDv (%)</th></tr>
<tr><td>V ≤ 690 V</td><td>3*</td><td>< 3**</td></tr>
</table>
PCC Point on a public power supply system, electrically nearest to a particular load, at which other loads are, or could be, connected. The PCC is a point located upstream of the considered installation.
THDi Indicates the total harmonic current distortion of the wave form. This value is defined as the ratio (in %) of the harmonic current to the fundamental (non-harmonic) current measured at a load point at the particular moment when the measurement is taken:
$$THDi = \frac{\sqrt{\sum_{2}^{40} I_n^2}}{I_1} \cdot 100\%$$
THDv Indicates the total magnitude of the voltage distortion. This value is defined as the ratio (in %) of the harmonic voltage to the fundamental (non-harmonic) voltage:
$$THDv = \frac{\sqrt{\sum_{2}^{40} U_n^2}}{U_1} \cdot 100\%$$
I_{sc}/I_1 Short-circuit ratio
I_{sc} Maximum short-circuit current at PCC
I_1 Continuous rms input current of the drive
I_n Amplitude of the current harmonic n
U_1 Supply voltage
U_n Amplitude of the voltage harmonic n
* The short-circuit ratio can influence the THDi value
** Other loads can influence the THDv value</td></tr>
</table>

Motor connection data

Motor types	Asynchronous AC induction motors, permanent magnet motors and ABB synchronous reluctance motors (SynRM motors)
Voltage (U_2)	0 to U_1 nominal, can be boosted higher but requires derating. Contact ABB for more information.
Frequency (f_2)	0…500 Hz **Note:** Operation above 150 Hz can require type-specific derating. For more information, contact your local ABB representative. For drives with du/dt filter: 0…120 Hz For drives with sine filter: 0…120 Hz
Frequency resolution	0.01 Hz
Current	See section *Ratings*
Switching frequency	2 kHz, 4 kHz, 8 kHz (depends on the parameter settings)
Maximum recommended motor cable length	Scalar control: 300 m (984 ft) **Note:** For restrictions due to EMC compatibility, see section EMC compliance (IEC/EN 61800-3:2004) (Page 187). Longer motor cables cause a motor voltage decrease which limits the available motor power. The decrease depends on the motor cable length and characteristics. Contact ABB for more information. Note that a sine filter (optional) at the drive output also causes a voltage decrease.

Control panel type

ACH-AP-H assistant control panel

Efficiency

Approximately 96.5% at nominal power level.

The efficiency is not calculated according to IEC 61800-9-2.

Energy efficiency data (ecodesign)

Energy efficiency data is not provided for the drive. The low-harmonic drives are exempt from the EU ecodesign requirements (Regulation EU/2019/1781, §2.3.d) and the UK ecodesign requirements (Regulation SI 2021 No. 745).

Protection classes for module

Degrees of protection (IEC/EN 60529)	IP00 (standard) IP20 (option +B051)
Enclosure types (UL 50/50E)	UL Open Type
Overvoltage category (IEC/EN 60664-1)	III
Protective class (IEC/EN 61800-5-1)	I

Ambient conditions

Environmental limits for the drive are given below. The drive is to be used in a heated, indoor, controlled environment.

Ambient conditions

	Operation installed for stationary use	Storage in the protective package	Transportation in the protective package
Installation site altitude	For TN and TT neutral-grounded network systems and IT ungrounded network systems: 0...4000 m (0...13123 ft) above sea level. Above 1000 m (3281 ft): See Altitude derating (Page 172)	-	-
Surrounding air temperature	-15 to +50 °C (5 to 122 °F). No frost allowed. Above 40 °C: See Surrounding air temperature derating (Page 171)	-40…+70 °C (-40…+158 °F)	-40…+70 °C (-40…+158 °F)
Relative humidity	5…95%	Max. 95%	Max. 95%
	No condensation allowed. Maximum allowed relative humidity is 60% in the presence of corrosive gases.		
Contamination	IEC/EN 60721-3-3:2002	IEC 60721-3-1:1997	IEC 60721-3-2:1997
Chemical gases	Class 3C2	Class 1C2	Class 2C2
Solid particles	Class 3S2. No conductive dust allowed.	Class 1S3. (packing must support this, otherwise 1S2)	Class 2S2
Pollution degree	2		
Atmospheric pressure	70…106 kPa 0.7 … 1.05 atmospheres	70…106 kPa 0.7 … 1.05 atmospheres	60…106 kPa 0.6 … 1.05 atmospheres
Vibration IEC 60068-2-6:2007, EN 60068-2-6:2008	Max. 0.1 mm (0.004 in) (10…57 Hz), max. 10 m/s^2 (33 ft/s^2) (57…150 Hz) sinusoidal	Max. 1 mm (0.04 in) (5 … 13.2 Hz), max. 7 m/s^2 (23 ft/s^2) (13.2 … 100 Hz) sinusoidal	Max. 3.5 mm (0.14 in) (2…9 Hz), max. 15 m/s^2 (49 ft/s^2) (9…200 Hz) sinusoidal
Shock IEC 60068-2-27:2008, EN 60068-2-27:2009	Not allowed	With packing max. 100 m/s^2 (330 ft/s^2), 11 ms	With packing max. 100 m/s^2 (330 ft/s^2), 11 ms
Free fall	Not allowed	100 mm (4 in) for weight over 100 kg (220 lb)	100 mm (4 in) for weight over 100 kg (220 lb)

Storage conditions

Store the drive in humidity controlled enclosed environments. Keep the drive in its package.

Colors

Drive enclosure: NCS 1502-Y (RAL 9002 / PMS 420 C).

Materials

Drive

Refer to ACS880-04, ACS880-14, ACS880-34, *ACS580-04, ACH580-04, ACH580-34, ACQ580-04 and ACQ580-34 drives Recycling instructions and environmental information* (3AXD50000137688 [English]).

Package materials for module products

This is a complete list of the package materials. The materials vary depending on the frame size (packages do not contain all materials listed below).

- Cardboard (heavy duty quality with wet strength glue in large modules)
- Molded pulp
- Plywood
- Wood
- PP (strapping)
- EPP (foam)
- PE (plastic bag and/or VCI film)
- Metal (fixing clamps, screws).

Package materials for options, accessories and spare parts

- Cardboard
- Kraft paper
- PP (straps)
- PE (film, bubble wrap)
- Plywood, wood (only for heavy components).

Materials vary according to the item type, size and shape. Typical package consists of a cardboard box with paper filling or bubble wrap. ESD-safe packing materials are used for printed circuit boards and similar items.

Materials of manuals

Printed product manuals are made of recyclable paper. Product manuals are available on the Internet.

Disposal

The main parts of the drive can be recycled to preserve natural resources and energy. Product parts and materials should be dismantled and separated.

Generally all metals, such as steel, aluminum, copper and its alloys, and precious metals can be recycled as material. Plastics, rubber, cardboard and other packaging material can be used in energy recovery. Printed circuit boards and large electrolytic capacitors

need selective treatment according to IEC 62635 guidelines. To aid recycling, plastic parts are marked with an appropriate identification code.

Contact your local ABB distributor for further information on environmental aspects and recycling instructions for professional recyclers. End of life treatment must follow international and local regulations.

Applicable standards

The drive complies with these standards.

IEC 61800-5-1:2007 + AMD1:2016 EN 61800-5-1:2007 + +A1:2017+A11:2021	Adjustable speed electrical power drive systems. Part 5-1: Safety requirements – electrical, thermal and energy
IEC 60204-1:2016 EN 60204-1:2018	Safety of machinery. Electrical equipment of machines. Part 1: General requirements. Provisions for compliance: The final assembler of the machine is responsible for installing: • emergency-stop device • supply disconnecting device • IP00 drive module into a cabinet.
IEC 60529:1989 EN 60529:1991 + A2:2013	Degrees of protection provided by enclosures (IP code)
IEC/EN 61800-3:2004 + A1:2012	Adjustable speed electrical power drive systems. Part 3: EMC requirements and specific test methods
UL 61800-5-1 First edition	UL Standard for Safety, Adjustable Speed Electrical Power Drive Systems – Part 5-1: Safety Requirements – Electrical, Thermal and Energy
CSA C22.2 No. 0-10	General Requirements - Canadian Electrical Code, Part II
CSA C22.2 No. 274-17	Adjustable Speed Drives

Markings

CE	CE mark Product complies with the applicable European Union legislation. For fulfilling the EMC requirements, see the additional information concerning the drive EMC compliance (IEC/EN 61800-3).
c UL us LISTED	UL Listed mark for USA and Canada Product has been tested and evaluated against the relevant North American standards by the Underwriters Laboratories. Valid with rated voltages up to 600 V.
UK CA	UKCA (UK Conformity Assessed) mark Product complies with the applicable United Kingdom's legislation (Statutory Instruments). Marking is required for products being placed on the market in Great Britain (England, Wales and Scotland).
EAC	EAC (Eurasian Conformity) mark Product complies with the technical regulations of the Eurasian Customs Union. EAC mark is required in Russia, Belarus and Kazakhstan.

	RCM mark Product complies with Australian and New Zealand requirements specific to EMC, telecommunications and electrical safety. For fulfilling the EMC requirements, see the additional information concerning the drive EMC compliance (IEC/EN 61800-3).
	Electronic Information Products (EIP) symbol including an Environment Friendly Use Period (EFUP). Product is compliant with the People's Republic of China Electronic Industry Standard (SJ/T 11364-2014) about hazardous substances. The EFUP is 20 years. China RoHS II Declaration of Conformity is available from https://library.abb.com.
	KC mark Product complies with Korean Registration of Broadcasting and Communications Equipment Clause 3, Article 58-2 of Radio Waves Act.
	BTL (BACnet Testing Laboratories) mark Product has BACnet conformance certificate.
	TÜV Safety Approved mark (functional safety) Product contains Safe torque off and possibly other (optional) safety functions which are certified by TÜV according to the relevant functional safety standards. Applicable to drives and inverters; not applicable to supply, brake or DC/DC converter units or modules.
	WEEE mark At the end of life the product should enter the recycling system at an appropriate collection point and not placed in the normal waste stream.

EMC compliance (IEC/EN 61800-3:2004)

Definitions

EMC stands for Electromagnetic Compatibility. It is the ability of electrical/electronic equipment to operate without problems within an electromagnetic environment. Likewise, the equipment must not disturb or interfere with any other product or system within its locality.

First environment includes establishments connected to a low-voltage network which supplies buildings used for domestic purposes.

Second environment includes establishments connected to a network not supplying domestic premises.

Drive of category C1: drive of rated voltage less than 1000 V and intended for use in the first environment.

Drive of category C2: drive of rated voltage less than 1000 V and intended to be installed and started up only by a professional when used in the first environment.

Note: A professional is a person or organization having necessary skills in installing and/or starting up power drive systems, including their EMC aspects.

Drive of category C3: drive of rated voltage less than 1000 V and intended for use in the second environment and not intended for use in the first environment.

Drive of category C4: drive of rated voltage equal to or above 1000 V, or rated current equal to or above 400 A, or intended for use in complex systems in the second environment.

Category C3

The drive complies with the standard with the following provisions:

1. The drive is equipped with internal EMC filter (+E210).
2. The motor and control cables are selected as specified in the hardware manual.
3. The drive is installed according to the instructions given in the hardware manual.
4. Maximum motor cable length is 150 meters.

WARNING!
A drive of category C3 is not intended to be used on a low-voltage public network which supplies domestic premises. Radio frequency interference is expected if the drive is used on such a network.

Category C4

If the provisions under Category C3 cannot be met, the requirements of the standard can be met as follows:

1. It is ensured that no excessive emission is propagated to neighboring low-voltage networks. In some cases, the inherent suppression in transformers and cables is sufficient. If in doubt, the supply transformer with static screening between the primary and secondary windings can be used.

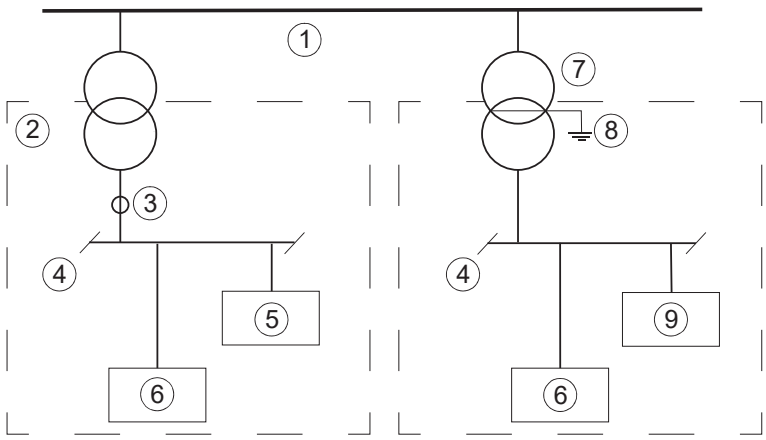

1	Medium voltage network	6	Equipment
2	Neighboring network	7	Supply transformer
3	Point of measurement	8	Static screen
4	Low voltage	9	Drive

5	Equipment (victim)		

2. An EMC plan for preventing disturbances is drawn up for the installation. A template is available in Technical guide No. 3 EMC compliant installation and configuration for a power drive system (3AFE61348280 [English]).
3. The motor and control cables are selected as specified in the hardware manual.
4. The drive is installed according to the instructions given in the hardware manual.



WARNING!
A drive of category C4 is not intended to be used on a low-voltage public network which supplies domestic premises. Radio frequency interference is expected if the drive is used on such a network.

UL checklist



WARNING!
Operation of this drive requires detailed installation and operation instructions provided in the hardware and software manuals. The manuals are provided in electronic format in the drive package or on the Internet. Keep the manuals with the drive at all times. Hard copies of the manuals can be ordered through the manufacturer.

- Make sure that the drive type designation label includes the applicable marking.
- **DANGER - Risk of electric shock.** After disconnecting the input power, always wait for 5 minutes to let the intermediate circuit capacitors discharge before you start working on the drive, motor or motor cable.
- The drive is to be used in a heated, indoor controlled environment. The drive must be installed in clean air according to the enclosure classification. Cooling air must be clean, free from corrosive materials and electrically conductive dust.
- The maximum surrounding air temperature is 40 °C at rated output current. The output current is derated for 40…50 °C.

  Note: For cabinet-built drives, the maximum surrounding air temperature is 40 °C (104 °F).
- The drive is suitable for use in a circuit capable of delivering not more than 100 kA rms symmetrical amperes, 600 V maximum when protected by the UL fuses given elsewhere in this chapter.
- The cables located within the motor circuit must be rated for at least 75 °C in UL-compliant installations.
- The input cable must be protected with fuses or circuit breakers. These protective devices provide branch circuit protection in accordance with the national regulations (National Electrical Code (NEC) or Canadian Electrical Code). Obey also any other applicable local or provincial codes.

WARNING!
The opening of the branch-circuit protective device may be an indication that a fault current has been interrupted. To reduce the risk of fire or electric shock, current-carrying parts and other components of the device should be examined and replaced if damaged.

- The integral solid state short circuit protection of the drive does not provide branch circuit protection. Branch circuit protection must be provided in accordance with the National Electrical Code and any additional local codes.
- The drive provides motor overload protection. For adjustments, see the firmware manual.
- The drive overvoltage category according to IEC 60664-1 is III.

Design lifetime expectancy

The design lifetime expectancy of the drive and its overall components exceeds ten (10) years in normal operating environments. In some cases, the drive can last 20 years or more. To achieve a long lifetime for the product the manufacturer's instructions for sizing the drive, installation, operational conditions and preventive maintenance schedule shall be followed.

Declarations of conformity

You can find declarations of conformity in PDF format on the Internet at www.abb.com/drives/documents. For EU and UK declarations of conformity, see the chapter The Safe torque off function (Page 203).

Disclaimer

Generic disclaimer

The manufacturer shall have no obligation with respect to any product which (i) has been improperly repaired or altered; (ii) has been subjected to misuse, negligence or accident; (iii) has been used in a manner contrary to the manufacturer's instructions; or (iv) has failed as a result of ordinary wear and tear.

Cybersecurity disclaimer

This product can be connected to and communicate information and data via a network interface. The HTTP protocol, which is used between the commissioning tool (Drive Composer) and the product, is an unsecured protocol. For independent and continuous operation of product such connection via network to commissioning tool is not necessary. However it is Customer's sole responsibility to provide and continuously ensure a secure connection between the product and Customer network or any other network (as the case may be). Customer shall establish and maintain any appropriate measures (such as but not limited to the installation of firewalls, prevention of physical access, application of authentication measures, encryption of data, installation of anti-virus programs, etc.) to protect the product, the network, its system and the interface against any kind of security breaches, unauthorized access, interference, intrusion, leakage and/or theft of data or information.

Notwithstanding any other provision to the contrary and regardless of whether the contract is terminated or not, ABB and its affiliates are under no circumstances liable for damages and/or losses related to such security breaches, any unauthorized access, interference, intrusion, leakage and/or theft of data or information.

21

Dimension drawings

Contents of this chapter

This chapter contains dimension drawings of the drive modules in mm and [inches].

Standard configuration (+E208 and +E210 included)

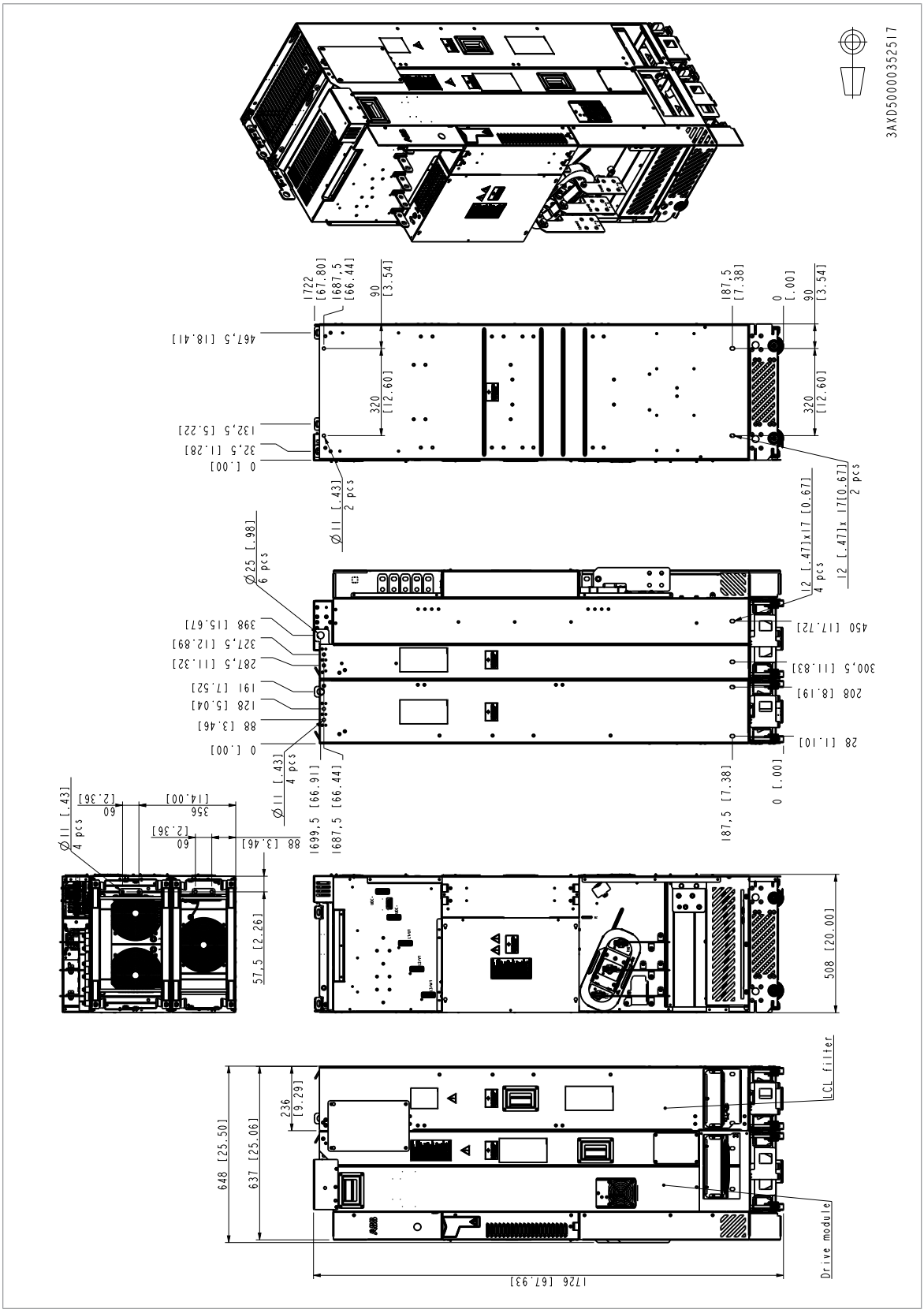

Drive module with options +B051 and +H370

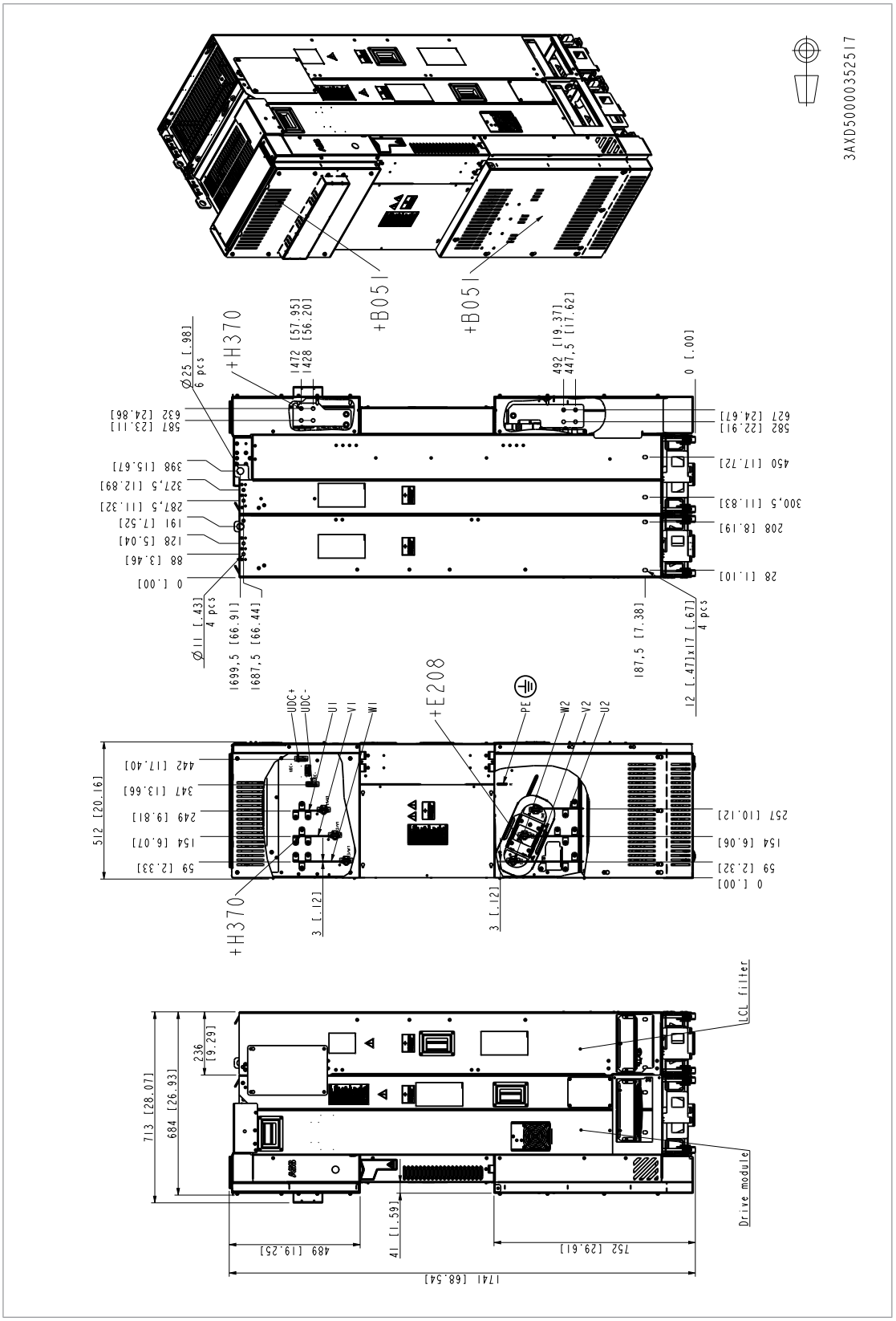

Drive module without options +B051 and +H370

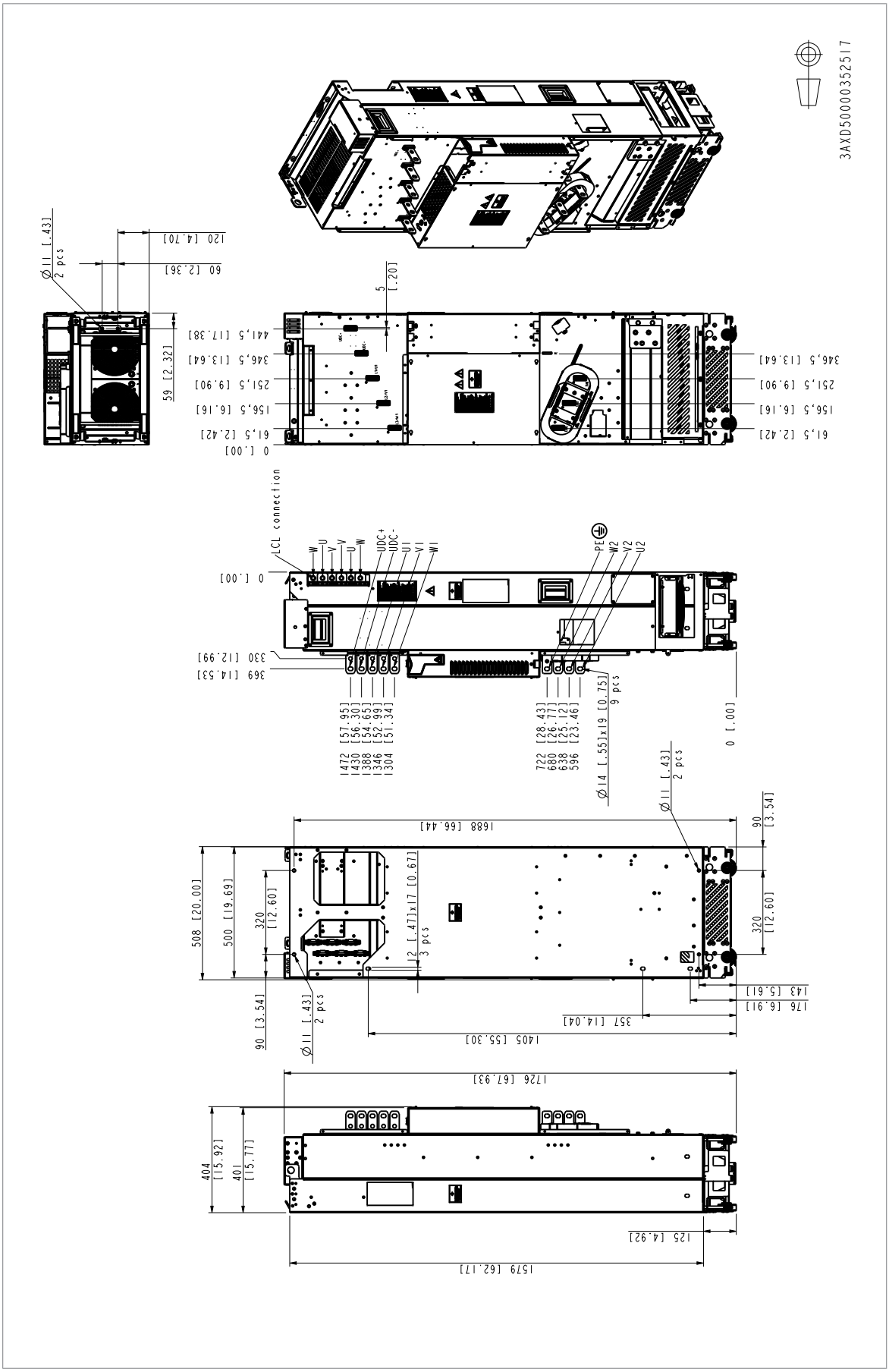

LCL filter module

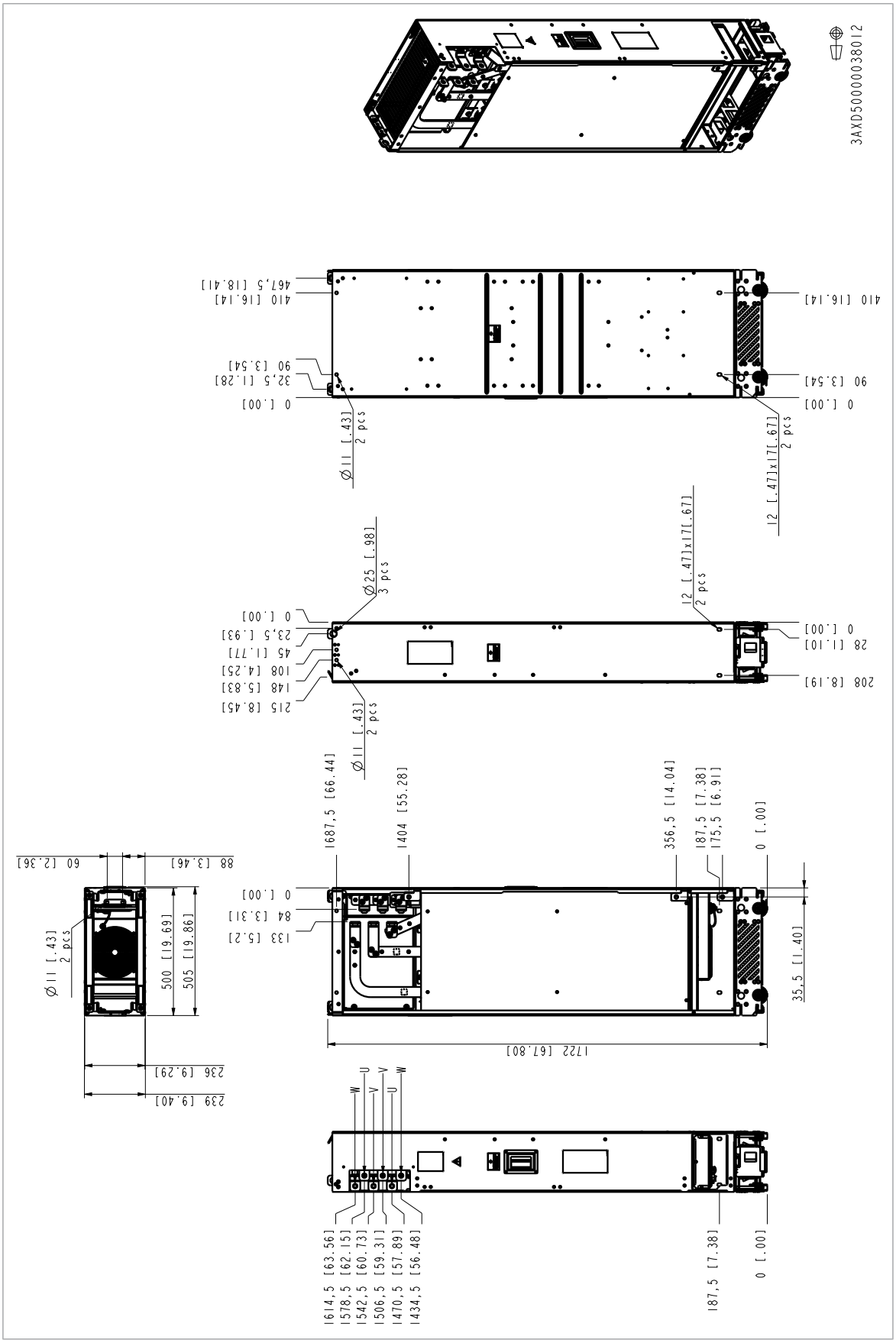

Bottom plate

This drawing shows the dimensions of the bottom plate for 800 mm Rittal VX25 enclosure. It is not an ABB product.

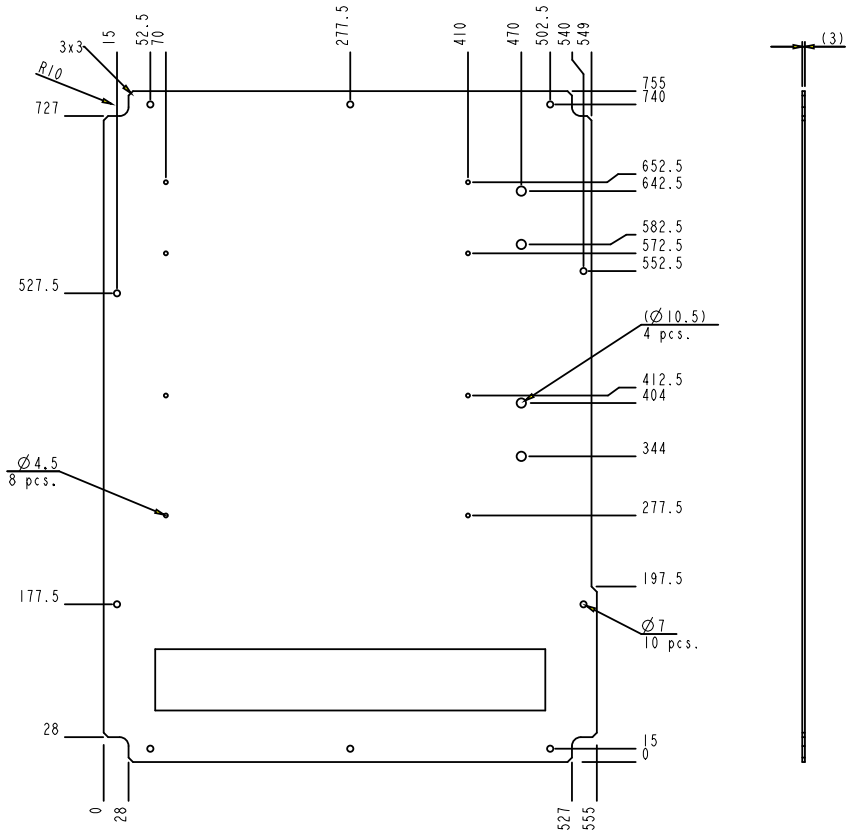

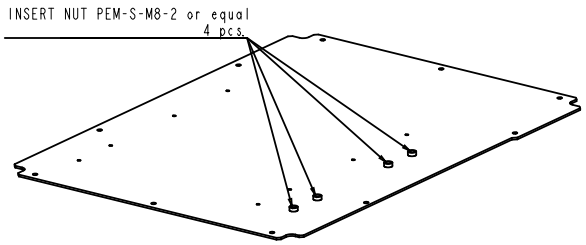

3AXD50000451944

Air baffles

This drawing shows the dimensions of the air baffles around the drive module with option +B051 for 800 mm Rittal VX25 enclosure.

These are not ABB products.

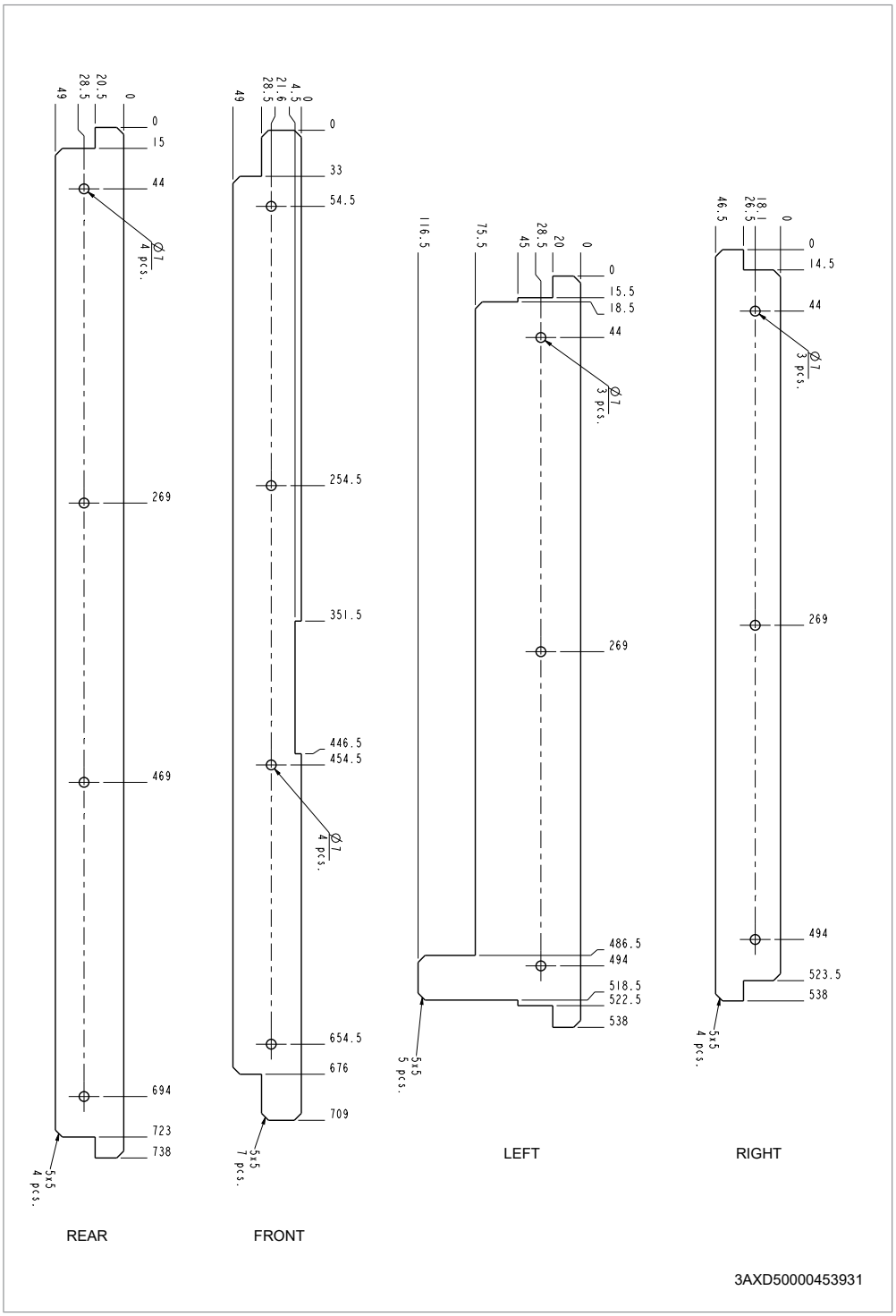

Material of the air baffles

0.75 mm polycabonate (PC) film LEXAN® FR60 (GE) with UL94 V–0 listing, UV stability. (LEXAN® FR700 or Valox FR1 only with special permission). Unmarked bend radii 0.6 mm.

22

Example circuit diagrams

Contents of this chapter

This chapter shows an example circuit diagram for a cabinet-installed drive module.

Example circuit diagram

This diagram is an example for the main wiring of a drive cabinet. Note that the diagram includes components which are not included in a basic delivery (* plus code options, ** other options, *** to be acquired by the customer).

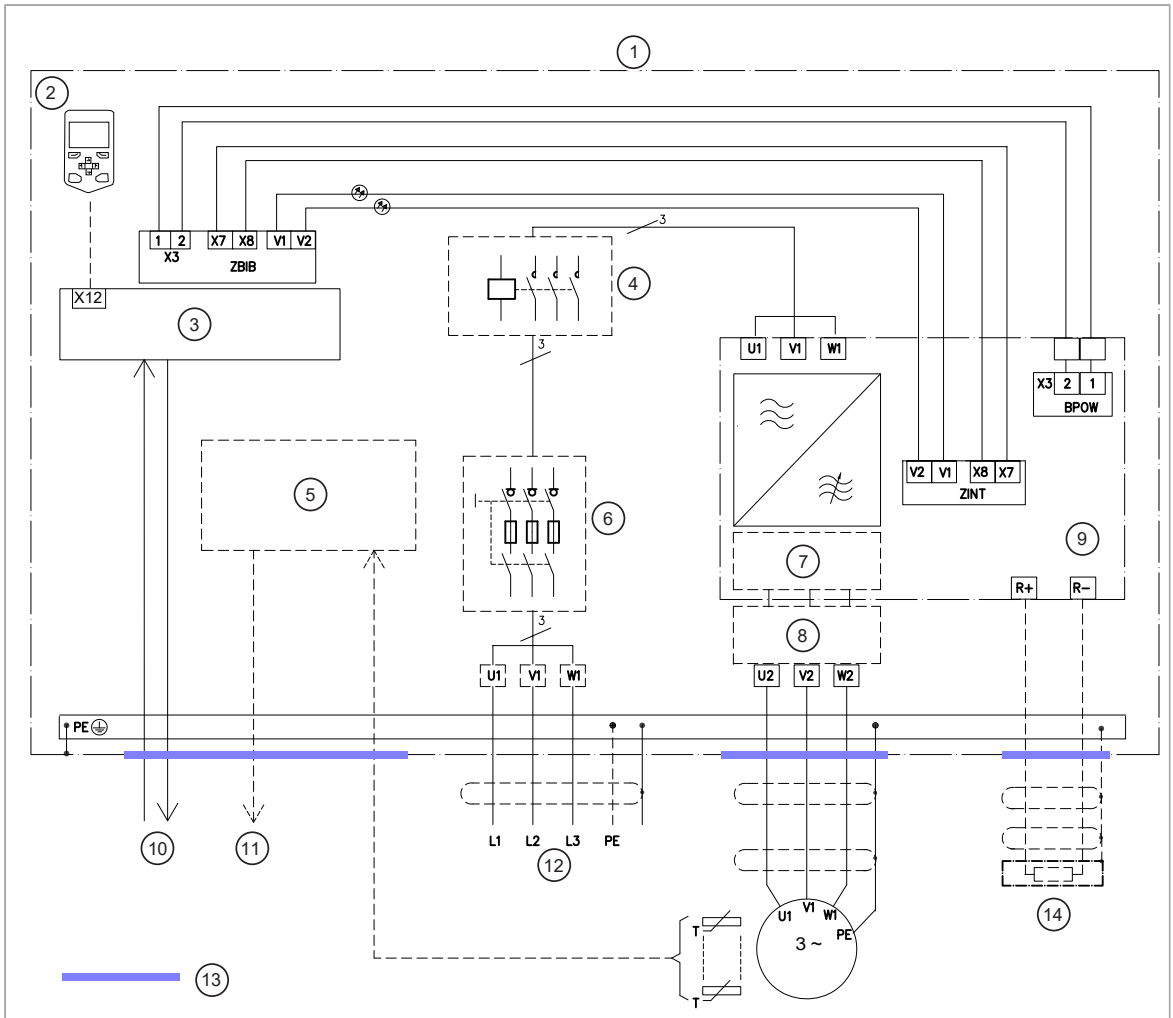

1	Cabinet
2	*ACx-AP-x control panel
3	CCU control unit
4	***Main contactor
5	**Motor temperature supervision
6	***Switch fuse disconnector
7	Common mode filter
8	**d*u*/d*t* filter or sine filter
9	Drive module
10	Input and output signals
11	Alarm
12	Supply
13	360° grounding recommended
14	**Brake resistor

23

The Safe torque off function

Contents of this chapter

This chapter describes the Safe torque off (STO) function of the drive and gives instructions for its use.

Description

The Safe torque off function can be used, for example, as the final actuator device of safety circuits (such as an emergency stop circuit) that stop the drive in case of danger. Another typical application is a prevention of unexpected start-up function that enables short-time maintenance operations like cleaning or work on non-electrical parts of the machinery without switching off the power supply to the drive.

When activated, the Safe torque off function disables the control voltage for the power semiconductors of the drive output stage, thus preventing the drive from generating the torque required to rotate the motor. If the motor is running when Safe torque off is activated, it coasts to a stop.

The Safe torque off function has a redundant architecture, that is, both channels must be used in the safety function implementation. The safety data given in this manual is calculated for redundant use, and does not apply if both channels are not used.

The Safe torque off function complies with these standards:

Standard	Name
IEC 60204-1:2021 EN 60204-1:2018	Safety of machinery – Electrical equipment of machines – Part 1: General requirements
IEC 61000-6-7:2014	Electromagnetic compatibility (EMC) – Part 6-7: Generic standards – Immunity requirements for equipment intended to perform functions in a safety-related system (functional safety) in industrial locations

Standard	Name
IEC 61326-3-1:2017	Electrical equipment for measurement, control and laboratory use – EMC requirements – Part 3-1: Immunity requirements for safety-related systems and for equipment intended to perform safety-related functions (functional safety) – General industrial applications
IEC 61508-1:2010	Functional safety of electrical/electronic/programmable electronic safety-related systems – Part 1: General requirements
IEC 61508-2:2010	Functional safety of electrical/electronic/programmable electronic safety-related systems – Part 2: Requirements for electrical/electronic/programmable electronic safety-related systems
IEC 61511-1:2017	Functional safety – Safety instrumented systems for the process industry sector
IEC 61800-5-2:2016 EN 61800-5-2:2007	Adjustable speed electrical power drive systems – Part 5-2: Safety requirements – Functional
EN IEC 62061:2021	Safety of machinery – Functional safety of safety-related control systems
EN ISO 13849-1:2015	Safety of machinery – Safety-related parts of control systems – Part 1: General principles for design
EN ISO 13849-2:2012	Safety of machinery – Safety-related parts of control systems – Part 2: Validation

The function also corresponds to Prevention of unexpected start-up as specified by EN ISO 14118:2018 (ISO 14118:2017), and Uncontrolled stop (stop category 0) as specified in EN/IEC 60204-1.

Compliance with the European Machinery Directive and the UK Supply of Machinery (Safety) Regulations

The Declarations of conformity are shown at the end of this chapter.

Wiring

For the electrical specifications of the STO connection, see the technical data of the control unit.

Connection principle

Single ACH580-34 drive, internal power supply

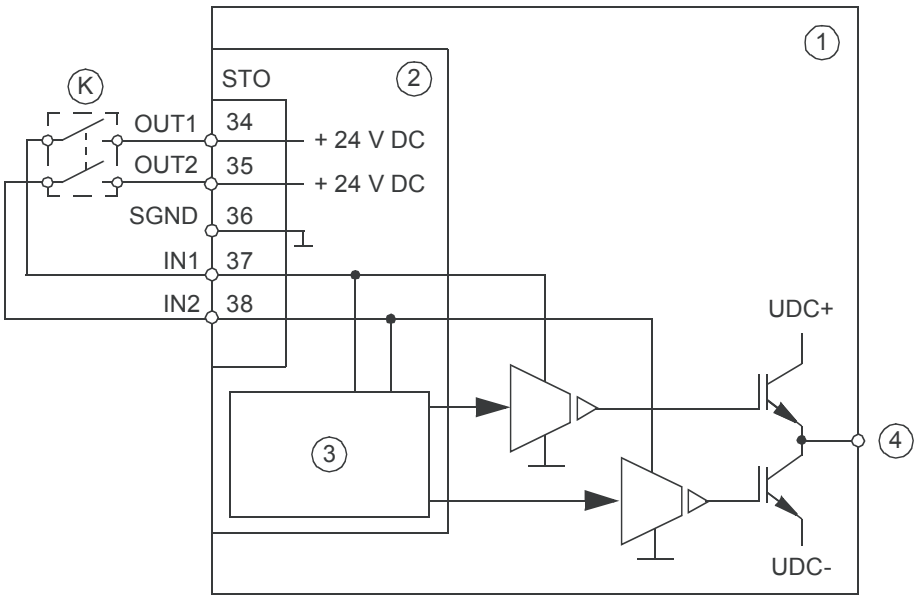

1	Drive
2	Control unit
3	Control logic
4	To motor
K	Activation switch

Single ACH580-34 drive, external power supply

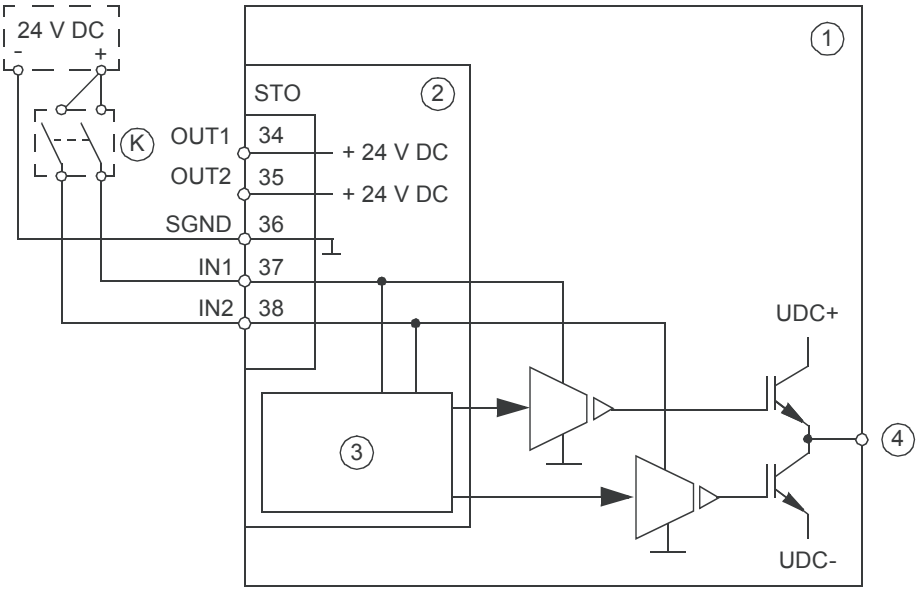

1	Drive
2	Control unit
3	Control logic
4	To motor
K	Activation switch

Wiring examples

Single ACH580-34 drive, internal power supply

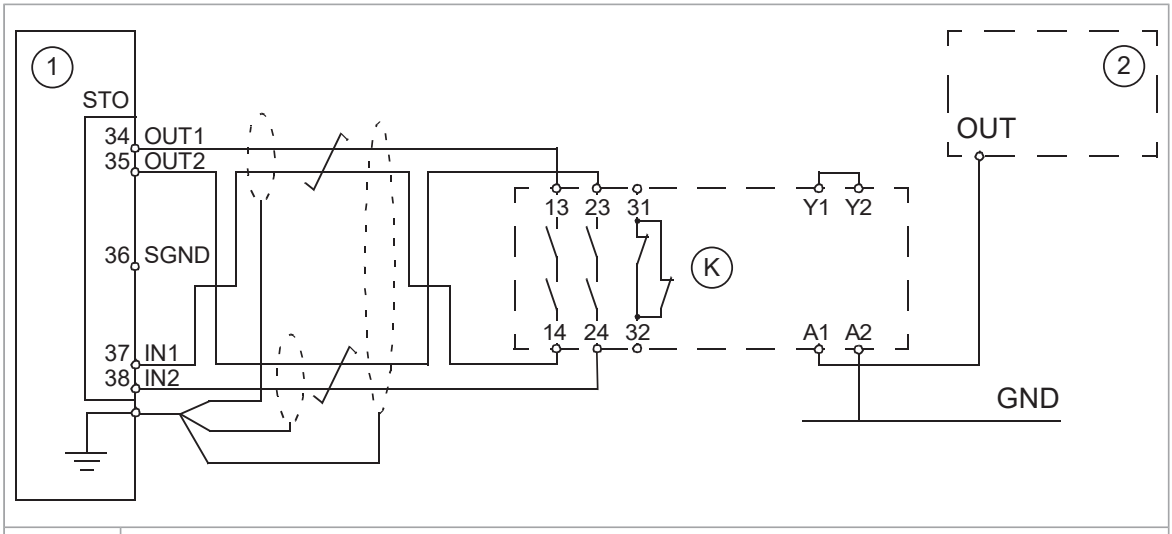

1	Drive
2	Safety PLC
K	Safety relay

Single ACH580-34 drive, external power supply

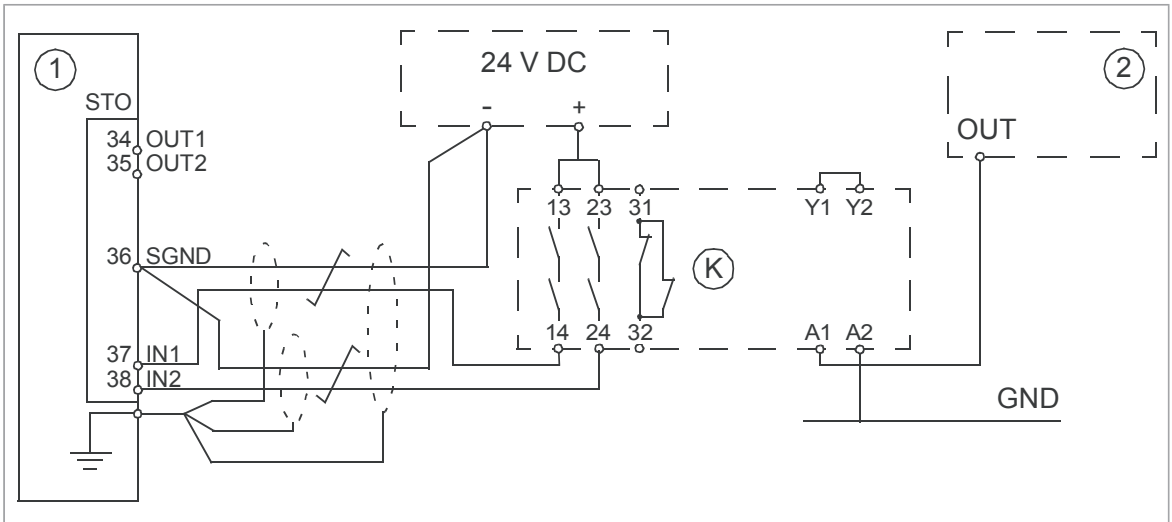

1	Drive
2	Safety PLC
K	Safety relay

Multiple ACH580-34 drives, internal power supply

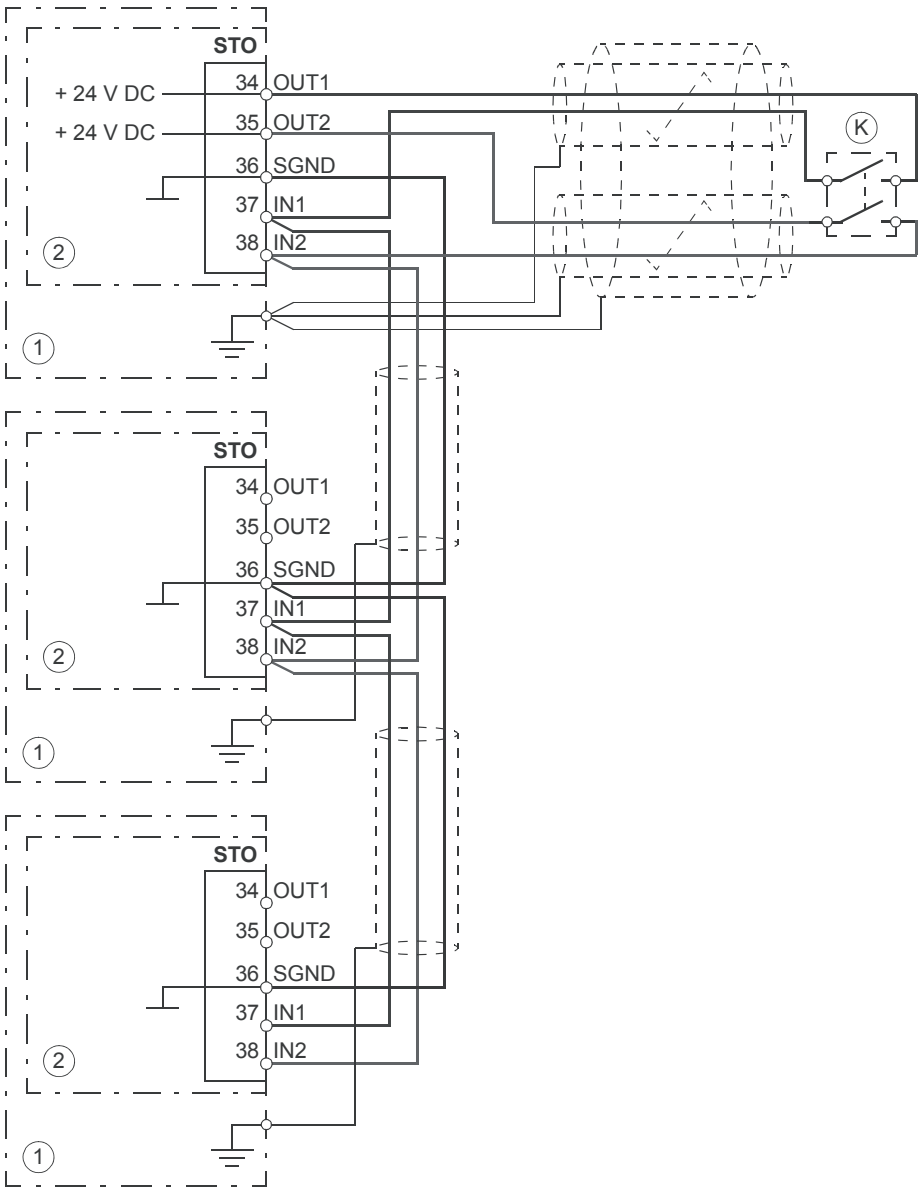

1	Drive
2	Control unit
K	Activation switch

Multiple ACH580-34 drives, external power supply

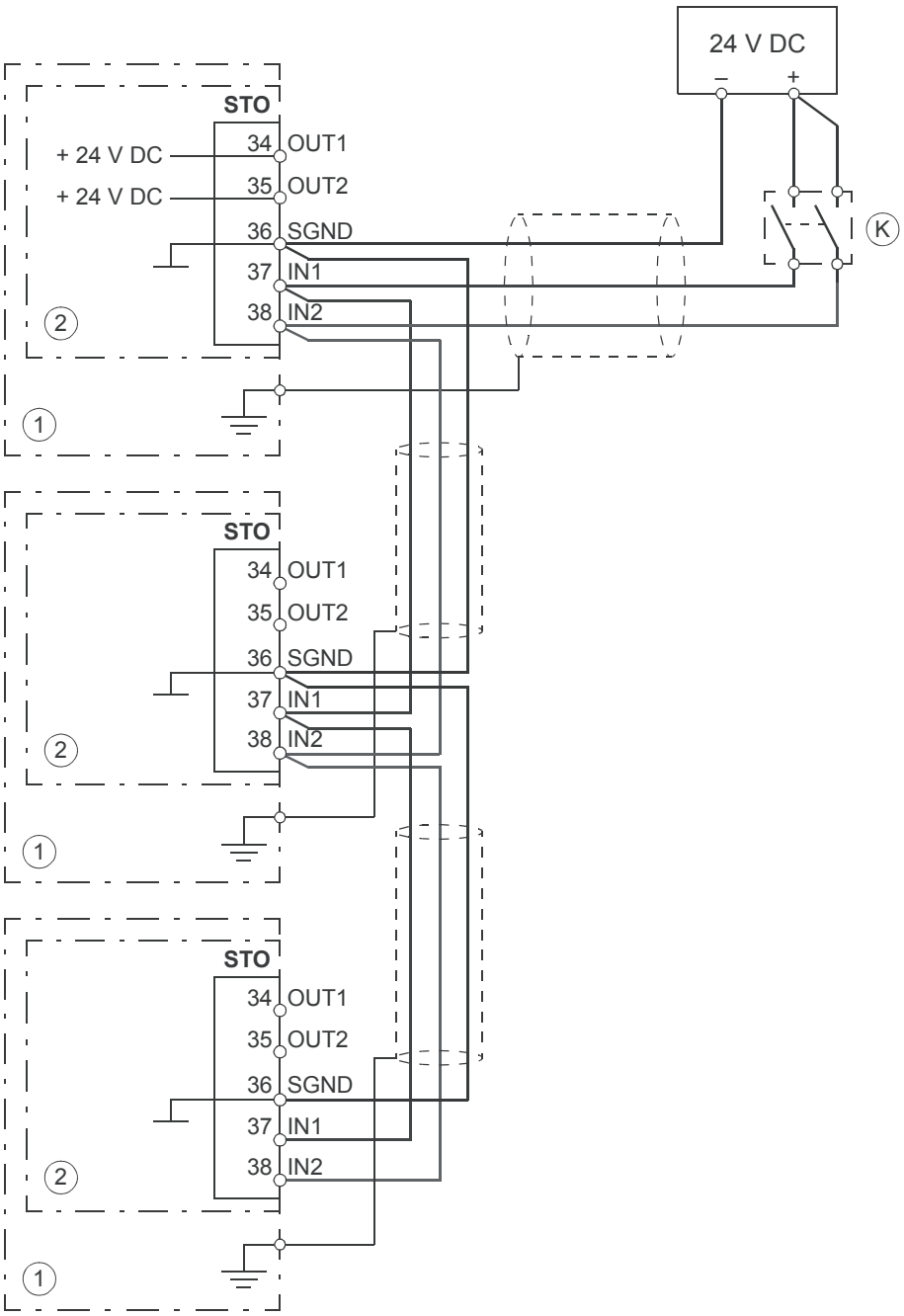

1	Drive
2	Control unit
K	Activation switch

Activation switch

In the wiring diagrams, the activation switch has the designation [K]. This represents a component such as a manually operated switch, an emergency stop push button switch, or the contacts of a safety relay or safety PLC.

- In case a manually operated activation switch is used, the switch must be of a type that can be locked out to the open position.
- The contacts of the switch or relay must open/close within 200 ms of each other.
- A CPTC thermistor protection module or an FSPS safety functions module can also be used. For more information, see the module documentation.

Cable types and lengths

- ABB recommends double-shielded twisted-pair cable.
- Maximum cable lengths:
  - 300 m (1000 ft) between activation switch [K] and drive control unit
  - 60 m (200 ft) between multiple drives
  - 60 m (200 ft) between external power supply and first control unit

Note: A short-circuit in the wiring between the switch and an STO terminal causes a dangerous fault. Therefore, it is recommended to use a safety relay (including wiring diagnostics) or a wiring method (shield grounding, channel separation) which reduces or eliminates the risk caused by the short-circuit.

Note: The voltage at the STO input terminals of the drive must be at least 13 V DC to be interpreted as “1”.

The pulse tolerance of the input channels is 1 ms.

Grounding of protective shields

- Ground the shield in the cabling between the activation switch and the control unit at the control unit only.
- Ground the shield in the cabling between two control units at one control unit only.

Operation principle

1. The Safe torque off activates (the activation switch is opened, or safety relay contacts open).
2. The STO inputs of the drive control unit de-energize.
3. The control unit cuts off the control voltage from the output IGBTs.
4. The control program generates an indication as defined by parameter 31.22 (see the firmware manual of the drive).
   The parameter selects which indications are given when one or both STO signals are switched off or lost. The indications also depend on whether the drive is running or stopped when this occurs.

   Note: This parameter does not affect the operation of the STO function itself. The STO function will operate regardless of the setting of this parameter: a running drive will stop upon removal of one or both STO signals, and will not start until both STO signals are restored and all faults reset.

   Note: The loss of only one STO signal always generates a fault as it is interpreted as a malfunction of STO hardware or wiring.
5. The motor coasts to a stop (if running). The drive cannot restart while the activation switch or safety relay contacts are open. After the contacts close, a reset may be needed (depending on the setting of parameter 31.22). A new start command is required to start the drive.

Start-up including validation test

To ensure the safe operation of a safety function, validation is required. The final assembler of the machine must validate the function by performing a validation test. The test must be performed

1. at initial start-up of the safety function
2. after any changes related to the safety function (circuit boards, wiring, components, settings, replacement of inverter module, etc.)
3. after any maintenance work related to the safety function
4. after a drive firmware update
5. at the proof test of the safety function.

Competence

The validation test of the safety function must be carried out by a competent person with adequate expertise and knowledge of the safety function as well as functional safety, as required by IEC 61508-1 clause 6. The test procedures and report must be documented and signed by this person.

Validation test reports

Signed validation test reports must be stored in the logbook of the machine. The report shall include documentation of start-up activities and test results, references to failure reports and resolution of failures. Any new validation tests performed due to changes or maintenance shall be logged into the logbook.

Validation test procedure

After wiring the Safe torque off function, validate its operation as follows.

Note: If a CPTC-02 or an FSPS-21 module is installed, refer to its documentation.

Action	☑
WARNING! Obey the safety instructions. If you ignore them, injury or death, or damage to the equipment can occur.	☐
Make sure that the motor can be run and stopped freely during start-up.	☐
Stop the drive (if running), switch the input power off and isolate the drive from the power line using a disconnector.	☐
Check the STO circuit connections against the wiring diagram.	☐
Close the disconnector and switch the power on.	☐
Test the operation of the STO function when the motor is stopped. • Give a stop command for the drive (if running) and wait until the motor shaft is at a standstill. Make sure that the drive operates as follows: • Open the STO circuit. The drive generates an indication if one is defined for the 'stopped' state in parameter 31.22 (see the firmware manual). • Give a start command to verify that the STO function blocks the drive's operation. The motor should not start. • Close the STO circuit. • Reset any active faults. Restart the drive and check that the motor runs normally.	☐

Action	☑
Test the operation of the STO function when the motor is running. • Start the drive and make sure the motor is running. • Open the STO circuit. The motor should stop. The drive generates an indication if one is defined for the 'running' state in parameter 31.22 (see the firmware manual). • Reset any active faults and try to start the drive. • Make sure that the motor stays at a standstill and the drive operates as described above in testing the operation when the motor is stopped. • Close the STO circuit. • Reset any active faults. Restart the drive and check that the motor runs normally.	☐
Test the operation of the failure detection of the drive. The motor can be stopped or running. • Open the 1st input channel of the STO circuit. If the motor was running, it should coast to a stop. The drive generates an FA81 fault indication (see the firmware manual). • Give a start command to verify that the STO function blocks the drive's operation. The motor should not start. • Open the STO circuit (both channels). • Give a reset command. • Close the STO circuit (both channels). • Reset any active faults. Restart the drive and check that the motor runs normally. • Open the 2nd input channel of the STO circuit. If the motor was running, it should coast to a stop. The drive generates an FA82 fault indication (see the firmware manual). • Give a start command to verify that the STO function blocks the drive's operation. The motor should not start. • Open the STO circuit (both channels). • Give a reset command. • Close the STO circuit (both channels). • Reset any active faults. Restart the drive and check that the motor runs normally.	☐
Document and sign the validation test report which verifies that the safety function is safe and accepted for operation.	☐

Use

1. Open the activation switch, or activate the safety functionality that is wired to the STO connection.
2. The STO inputs on the drive control unit de-energize, and the control unit cuts off the control voltage from the output IGBTs.
3. The control program generates an indication as defined by parameter 31.22 (see the firmware manual of the drive).
4. The motor coasts to a stop (if running). The drive will not restart while the activation switch or safety relay contacts are open.
5. Deactivate the STO by closing the activation switch, or resetting the safety functionality that is wired to the STO connection.
6. Reset any faults before restarting.



WARNING!
The Safe torque off function does not disconnect the voltage of the main and auxiliary circuits from the drive. Therefore maintenance work on electrical parts of the drive or the motor can only be carried out after isolating the drive from the supply and all other voltage sources.



WARNING!
The drive cannot detect or memorize any changes in the STO circuitry when the drive control unit is not powered or when the main power to the drive is off. If both STO circuits are closed and a level-type start signal is active when the power is restored, it is possible that the drive starts without a fresh start command. Take this into account in the risk assessment of the system.

This is also valid when the drive is only powered by a CMOD-xx multifunction extension module.



WARNING!
Permanent magnet or synchronous reluctance [SynRM] motors only:

In case of a multiple IGBT power semiconductor failure, the drive can produce an alignment torque which maximally rotates the motor shaft by 180/p degrees (with permanent magnet motors) or 180/2p degrees (with synchronous reluctance [SynRM] motors) regardless of the activation of the Safe torque off function. p denotes the number of pole pairs.

Notes:

- If a running drive is stopped by using the Safe torque off function, the drive will cut off the motor supply voltage and the motor will coast to a stop. If this causes danger or is not otherwise acceptable, stop the drive and machinery using the appropriate stop mode before activating the Safe torque off function.
- The Safe torque off function overrides all other functions of the drive.
- The Safe torque off function is ineffective against deliberate sabotage or misuse.
- The Safe torque off function has been designed to reduce the recognized hazardous conditions. In spite of this, it is not always possible to eliminate all

potential hazards. The assembler of the machine must inform the final user about the residual risks.

Maintenance

After the operation of the circuit is validated at start-up, the STO function shall be maintained by periodic proof testing. In high demand mode of operation, the maximum proof test interval is 20 years. In low demand mode of operation, the maximum proof test interval is 10 years; see section Safety data (Page 217). It is assumed that all dangerous failures of the STO circuit are detected by the proof test. To perform the proof test, do the Validation test procedure (Page 211).

Note: See also the Recommendation of Use CNB/M/11.050 (published by the European co-ordination of Notified Bodies) concerning dual-channel safety-related systems with electromechanical outputs:

- When the safety integrity requirement for the safety function is SIL 3 or PL e (cat. 3 or 4), the proof test for the function must be performed at least every month.
- When the safety integrity requirement for the safety function is SIL 2 (HFT = 1) or PL d (cat. 3), the proof test for the function must be performed at least every 12 months.

The STO function of the drive does not contain any electromechanical components.

In addition to proof testing, it is a good practice to check the operation of the function when other maintenance procedures are carried out on the machinery.

Include the Safe torque off operation test described above in the routine maintenance program of the machinery that the drive runs.

If any wiring or component change is needed after start-up, or the parameters are restored, do the test given in section Validation test procedure (Page 211).

Use only spare parts approved by ABB.

Record all maintenance and proof test activities in the machine logbook.

Competence

The maintenance and proof test activities of the safety function must be carried out by a competent person with adequate expertise and knowledge of the safety function as well as functional safety, as required by IEC 61508-1 clause 6.

Fault tracing

The indications given during the normal operation of the Safe torque off function are selected by drive control program parameter 31.22.

The diagnostics of the Safe torque off function cross-compare the status of the two STO channels. In case the channels are not in the same state, a fault reaction function is performed and the drive trips on an FA81 or FA82 fault. An attempt to use the STO in a non-redundant manner, for example activating only one channel, will trigger the same reaction.

See the firmware manual of the drive control program for the indications generated by the drive, and for details on directing fault and warning indications to an output on the control unit for external diagnostics.

Any failures of the Safe torque off function must be reported to ABB.

Safety data

The safety data for the Safe torque off function is given below.

Note: The safety data is calculated for redundant use, and applies only if both STO channels are used.

Frame size	SIL	SC	PL	PFH (T_1 = 20 a) (1/h)	PFD_{avg} (T_1 = 2 a)	PFD_{avg} (T_1 = 5 a)	PFD_{avg} T_1 = 10 a	$MTTF_D$ (a)	DC (%)	SFF (%)	Cat.	HFT	CCF	T_M (a)	PFH_{diag} (1/h)	λ_{Diag_s} (1/h)	λ_{Diag_d} (1/h)
R11	3	3	e	4.14E-09	3.63E-05	9.08E-05	1.82E-04	16398	≥90	99.61	3	1	80	20	7.89E-10	6,53E-07	7,89E-08
3AXD10001613536 B																	

- The following temperature profile is used in safety value calculations:
  - 670 on/off cycles per year with ΔT = 71.66 °C
  - 1340 on/off cycles per year with ΔT = 61.66 °C
  - 30 on/off cycles per year with ΔT = 10.0 °C
  - 32 °C board temperature at 2.0% of time
  - 60 °C board temperature at 1.5% of time
  - 85 °C board temperature at 2.3% of time.
- The STO is a type A safety component as defined in IEC 61508-2.
- Relevant failure modes:
  - The STO trips spuriously (safe failure)
  - The STO does not activate when requested
  - A fault exclusion on the failure mode “short circuit on printed circuit board” has been made (EN 13849-2, table D.5). The analysis is based on an assumption that one failure occurs at one time. No accumulated failures have been analyzed.
- STO response times:
  - STO reaction time (shortest detectable break): 1 ms
  - STO response time: 2 ms (typical), 30 ms (maximum)
  - Fault detection time: Channels in different states for longer than 200 ms
  - Fault reaction time: Fault detection time + 10 ms.
- Indication delays:
  - STO fault indication (parameter 31.22) delay: < 500 ms
  - STO warning indication (parameter 31.22) delay: < 1000 ms.

Terms and abbreviations

Term or abbreviation	Reference	Description
Cat.	EN ISO 13849-1	Classification of the safety-related parts of a control system in respect of their resistance to faults and their subsequent behavior in the fault condition, and which is achieved by the structural arrangement of the parts, fault detection and/or by their reliability. The categories are: B, 1, 2, 3 and 4.
CCF	EN ISO 13849-1	Common cause failure (%)
DC	EN ISO 13849-1	Diagnostic coverage (%)
HFT	IEC 61508	Hardware fault tolerance
$MTTF_D$	EN ISO 13849-1	Mean time to dangerous failure: (Total number of life units) / (Number of dangerous, undetected failures) during a particular measurement interval under stated conditions
PFD_{avg}	IEC 61508	Average probability of dangerous failure on demand, that is, mean unavailability of a safety-related system to perform the specified safety function when a demand occurs
PFH	IEC 61508	Average frequency of dangerous failures per hour, that is, average frequency of a dangerous failure of a safety related system to perform the specified safety function over a given period of time
PFH_{diag}	IEC/EN 62061	Average frequency of dangerous failures per hour for the diagnostic function of STO
PL	EN ISO 13849-1	Performance level. Levels a…e correspond to SIL
Proof test	IEC 61508, IEC 62061	Periodic test performed to detect failures in a safety-related system so that, if necessary, a repair can restore the system to an "as new" condition or as close as practical to this condition

Term or abbreviation	Reference	Description
SC	IEC 61508	Systematic capability (1…3)
SFF	IEC 61508	Safe failure fraction (%)
SIL	IEC 61508	Safety integrity level (1…3)
STO	IEC/EN 61800-5-2	Safe torque off
T_1	IEC 61508-6	Proof test interval. T_1 is a parameter used to define the probabilistic failure rate (PFH or PFD) for the safety function or subsystem. Performing a proof test at a maximum interval of T_1 is required to keep the SIL capability valid. The same interval must be followed to keep the PL capability (EN ISO 13849) valid. See also section Maintenance.
T_M	EN ISO 13849-1	Mission time: the period of time covering the intended use of the safety function/device. After the mission time elapses, the safety device must be replaced. Note that any T_M values given cannot be regarded as a guarantee or warranty.
λ_{Diag_d}	IEC 61508-6	Dangerous failure rate (per hour) of the diagnostics function of STO
λ_{Diag_s}	IEC 61508-6	Safe failure rate (per hour) of the diagnostics function of STO

TÜV certificate

The TÜV certificate is available on the Internet at www.abb.com/drives/documents.

Declarations of conformity

EU Declaration of Conformity

Machinery Directive 2006/42/EC

We

Manufacturer:	ABB Oy
Address:	Hiomotie 13, 00380 Helsinki, Finland.
Phone:	+358 10 22 11

declare under our sole responsibility that the following product:

Frequency converters

ACH580-04/-34

with regard to the safety function

Safe Torque Off

is in conformity with all the relevant safety component requirements of EU Machinery Directive 2006/42/EC, when the listed safety function is used for safety component functionality.

The following harmonized standards have been applied:

EN 61800-5-2:2007	Adjustable speed electrical power drive systems – Part 5-2: Safety requirements - Functional
EN IEC 62061:2021	Safety of machinery – Functional safety of safety-related control systems
EN ISO 13849-1:2015	Safety of machinery – Safety-related parts of control systems. Part 1: General requirements
EN ISO 13849-2:2012	Safety of machinery – Safety-related parts of the control systems. Part 2: Validation
EN 60204-1:2018	Safety of machinery – Electrical equipment of machines – Part 1: General requirements

The following other standards have been applied:

IEC 61508:2010, parts 1-2	Functional safety of electrical / electronic / programmable electronic safety-related systems
IEC 61800-5-2:2016	Adjustable speed electrical power drive systems – Part 5-2: Safety requirements - Functional

The product(s) referred in this Declaration of conformity fulfil(s) the relevant provisions of other European Union Directives which are notified in Single EU Declaration of conformity 3AXD10000497691.

Authorized to compile the technical file: ABB Oy, Hiomotie 13, 00380 Helsinki, Finland.

Helsinki, August 31, 2022
Signed for and on behalf of:

Mika Vartiainen
Local Division Manager
ABB Oy

Harri Mustonen
Product Unit Manager
ABB Oy

Document number 3AXD10000611401

Declaration of Conformity

Supply of Machinery (Safety) Regulations 2008

We

Manufacturer:	ABB Oy
Address:	Hiomotie 13, 00380 Helsinki, Finland.
Phone:	+358 10 22 11

declare under our sole responsibility that the following product:

Frequency converters

ACH580-04/-34

with regard to the safety function

Safe Torque Off

is in conformity with all the relevant safety component requirements of the Supply of Machinery (Safety) Regulations 2008, when the listed safety function is used for safety component functionality.

The following designated standards have been applied:

EN 61800-5-2:2007	Adjustable speed electrical power drive systems – Part 5-2: Safety requirements - Functional
EN IEC 62061:2021	Safety of machinery – Functional safety of safety-related control systems
EN ISO 13849-1:2015	Safety of machinery – Safety-related parts of control systems. Part 1: General requirements
EN ISO 13849-2:2012	Safety of machinery – Safety-related parts of the control systems. Part 2: Validation
EN 60204-1:2018	Safety of machinery – Electrical equipment of machines – Part 1: General requirements

The following other standards have been applied:

EN 61508:2010, parts 1-2	Functional safety of electrical / electronic / programmable electronic safety-related systems
EN 61800-5-2:2017	Adjustable speed electrical power drive systems – Part 5-2: Safety requirements - Functional

The product(s) referred in this declaration of conformity fulfil(s) the relevant provisions of other UK statutory requirements, which are notified in a single declaration of conformity 3AXD10001325928.

Authorized to compile the technical file: ABB Limited, Daresbury Park, Cheshire, United Kingdom, WA4 4BT.

Helsinki, August 31, 2022
Signed for and on behalf of:

Mika Vartiainen
Local Division Manager
ABB Oy

Harri Mustonen
Product Unit Manager
ABB Oy

Document number 3AXD10001329522

24

Resistor braking

Contents of this chapter

This chapter describes how to select, protect and wire brake choppers and resistors. The chapter also contains the technical data.

Operation principle and hardware description

Brake choppers and resistors are available as add-on kits for the drive modules.

The brake chopper handles the extra energy generated by motor during a quick deceleration. The extra energy increases the drive DC link voltage. The chopper connects the brake resistor to the DC link whenever the voltage is greater than the limit defined by the control program. Energy consumption by the resistor losses lowers the voltage until the resistor can be disconnected.

Planning the braking system

Selecting the default brake circuit components - ABB chopper and ABB resistor

1. Calculate the maximum power generated by the motor during braking and define the braking cycle.
2. Select a drive according to motor load cycle considering also the braking cycle. See the drive ratings.
3. See the pre-selected chopper and the pre-selected resistor for the drive from the technical data of the ABB brake choppers and resistors.
4. Check the pre-selection of the chopper and resistor: Is your braking cycle 1/5 min or 10/60 s?

a. If yes: Is your braking power smaller than the value for the cycle given in the ratings of the ABB resistors? If yes: the pre-selected chopper and resistor combination is ok for the drive.
b. If no: Verify the pre-selected chopper and resistor according to the instructions given in section Calculating the maximum allowed braking power for a custom duty cycle – ABB chopper and ABB resistor (Page 224).

Calculating the maximum allowed braking power for a custom duty cycle – ABB chopper and ABB resistor

The maximum allowed braking power for the customer braking cycle must meet both of the conditions 1 and 2 below.

1. The braking power of the custom duty cycle must not be greater than the maximum braking power given in the ratings of the ABB choppers and resistors.

$$P_{br} \leq P_{br,max}$$

2. The braking energy transferred during any 600-second period must be smaller than or equal to the energy that is transferred during the reference braking cycle of 40 seconds every 600 seconds:

$$n \times P_{br} \times t_{br} \leq P_{br,max} \times 40\ s$$

where

n	Number of the braking pulses during the 600-second period
P_{br}	Braking power of the custom duty cycle in kW
t_{br}	Braking time within the custom duty cycle in seconds
$P_{br,max}$	Maximum braking power allowed for 40 seconds every 600 seconds. See the value in the ratings of the ABB choppers and resistors. (The ABB resistor does not withstand the 60-second cycle of the brake chopper.)

Selecting the default brake circuit components - ABB brake chopper and custom resistor

1. Calculate the maximum power generated by the motor during braking and define the braking cycle.
2. Select a drive and brake chopper combination. The reference braking cycle is 60 seconds in every 600 seconds.
3. Verify the selection. See section Calculating the maximum allowed braking power for a custom duty cycle – ABB chopper and custom resistor (Page 226). If necessary, repeat the pre-selection and verification until you find a suitable drive and chopper combination.
4. Select a custom brake resistor. See Selecting custom resistors (Page 225).

Selecting custom resistors

If you use other than ABB resistor,

1. make sure that the resistance of the custom resistor is greater or equal than the resistance of the default resistor in the ratings of the custom resistors:

   $$R \geq R_{min}$$

   where,

R	Resistance of the custom resistor
R_{min}	Resistance of the default resistor

   WARNING!
   Do not use a brake resistor with a resistance lower than the specified minimum value. It causes overcurrent that damages the brake chopper and the drive.

2. the resistance of the custom resistor does not restrict the braking capacity needed, ie.

   $$P_{max} < \frac{U_{DC}^2}{R}$$

   where,

P_{max}	Maximum power generated by the motor during braking
U_{DC}	Drive intermediate DC circuit voltage 1.35 · 1.25 · 415 V DC (when supply voltage is 380 to 415 V AC) 1.35 · 1.25 · 500 V DC (when supply voltage is 440 to 500 V AC) or 1.35 · 1.25 · 690 V DC (when supply voltage is 525 to 690 V AC)
R	Resistance of the custom resistor

3. make sure that the resistor can dissipate the energy transferred to it during the braking:
   - Braking energy is not greater than the resistor heat dissipation capacity (E_r) during the period specified. See the custom resistor specification.
   - The resistor is installed in a properly ventilated and cooled space. Otherwise the resistor cannot meet its heat dissipation capacity and overheats.
4. make sure that the instantaneous load capacity of the custom resistor is greater than the maximum power taken by the the resistor when it is connected to the drive intermediate DC circuit by the chopper

   $$P_{R,inst} > \frac{U_{DC}^2}{R}$$

   where,

$P_{R,inst}$	Instantaneous load capacity of the custom resistor
U_{DC}	Drive intermediate DC circuit voltage 1.35 · 1.25 · 415 V DC (when supply voltage is 380 to 415 V AC) 1.35 · 1.25 · 500 V DC (when supply voltage is 440 to 500 V AC) or 1.35 · 1.25 · 690 V DC (when supply voltage is 525 to 690 V AC)
R	Resistance of the custom resistor

Calculating the maximum allowed braking power for a custom duty cycle – ABB chopper and custom resistor

The maximum allowed braking power for the customer braking cycle must meet both of the conditions 1 and 2 below.

1. The braking power of the custom duty cycle must not be greater than the maximum braking power given in the ratings of the factory-installed brake choppers and custom resistors:

   $$P_{br} \leq P_{br,max}$$

2. The braking energy transferred during any 600-second period must be smaller than or equal to the energy that is transferred during the reference braking cycle of 60 seconds every 600 seconds:

   $$n \times P_{br} \times t_{br} \leq P_{br,max} \times 60\ s$$

   where,

n	Number of the braking pulses during the 600-second period
P_{br}	Braking power of the custom duty cycle in kW
t_{br}	Braking time within the custom duty cycle in seconds
$P_{br,max}$	Maximum braking power allowed for 60 seconds every 600 seconds. See the value in the ratings of the factory-installed brake choppers and custom resistors.

Example 1

The duration of a braking cycle is three minutes. The braking time is 15 minutes.

1. $P_{br} \leq P_{br,max}$
2. $n \times P_{br} \times t_{br} \leq P_{br,max} \times 60$ s
   $1 \times P_{br} \times 600$ s $\leq P_{br,max} \times 60$ s
   $P_{br \leq P_{br,max}} \times 60/600$ s $= 0.1 \times P_{br,max}$
   -> The allowed continuous braking power is 10% of the maximum braking power ($Pb_{r,max}$). This fulfills also condition 1.

Example 2

The duration of a braking cycle (T) is three minutes = 3 × 60 s = 180 s. The braking time (t_{br}) is 30 seconds.

1. $P_{br} \leq P_{br,max}$
2. $P_{br} \leq (P_{br,max} \times 60\ s)/(4 \times 30\ s) = 0.5 \times P_{br,max}$

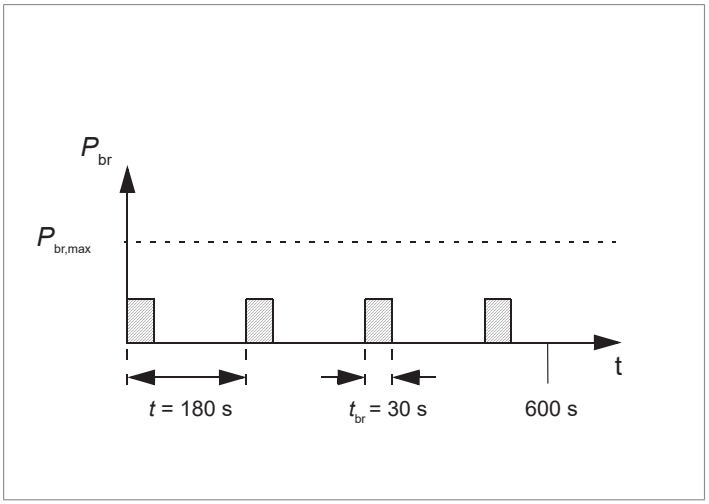

-> The maximum allowed braking power for the cycle is 50% of the rated value given for the reference cycle. This fulfills also condition 1.

Selecting and routing brake resistor cables

Use the same cable type for the resistor cabling as for the drive input cabling to ensure that the input fuses also protect the resistor cable. Alternatively, a two conductor shielded cable with the same cross-sectional area can be used.

Minimizing electromagnetic interference

Make sure that the installation is compliant with the EMC requirements. Obey these rules in order to minimize electromagnetic interference caused by the rapid voltage and current changes in the resistor cables:

- Shield the brake resistor cable. Use shielded cable or a metallic enclosure. If you use unshielded single-core cables, route them inside a cabinet that efficiently suppresses the radiated emissions.
- Install the cables away from other cable routes.
- Avoid long parallel runs with other cables. The minimum parallel cabling separation distance is 0.3 meters (1 ft).
- Cross the other cables at 90° angles.
- Keep the cable as short as possible in order to minimize the radiated emissions and stress on the brake chopper. The longer the cable the greater the radiated emissions, inductive load and voltage peaks over the IGBT semiconductors of the brake chopper.

Maximum cable length

The maximum length of the resistor cable(s) is 10 m (33 ft).

Selecting the installation location for the brake resistors

Protect the open (IP00) brake resistors against contact. Install the brake resistor in a place where it cools effectively. Arrange the cooling of the resistor so that:

- no danger of overheating is caused to the resistor or nearby materials, and
- the temperature of the space that the resistor is in does not go above the allowed maximum value.

WARNING!
The materials near the brake resistor must be non-flammable. The surface temperature of the resistor is high. Air flowing from the resistor is of hundreds of degrees Celsius. If the exhaust vents are connected to a ventilation system, make sure that the material withstands high temperatures. Protect the resistor against contact.

Protecting the system against thermal overload

The brake chopper protects itself and the resistor cables against thermal overload when the cables are dimensioned according to the nominal current of the drive. The drive control program includes a resistor and resistor cable thermal protection function which can be tuned by the user. See the firmware manual.

ABB requires that the resistor has a thermal switch (standard in ABB resistors) which is wired to the chopper for safety reasons. The thermal switch cable must be shielded and may not be longer than the resistor cable.

Protecting the resistor cable against short-circuits

The DC fuses for the brake chopper protection protect also the resistor cable against short-circuits.

Mechanical installation of resistors

All brake resistors must be installed outside the drive. Obey the resistor manufacturer's instructions.

Electrical installation

Measuring the insulation resistance of the brake resistor circuit

WARNING!
Obey the safety instructions of the drive. If you ignore them, injury or death, or damage to the equipment can occur. If you are not a qualified electrical professional, do not do installation, commissioning or maintenance work.

1. Stop the drive and do the steps in section Electrical safety precautions (Page 21) before you start the work.
2. Make sure that the resistor cable is connected to the resistor and disconnected from the drive output terminals.
3. At the drive end, connect the R+ and R- conductors of the resistor cable together. Measure the insulation resistance between the conductors and the PE conductor with a measuring voltage of 1000 V DC. The insulation resistance must be more than 1 Mohm.

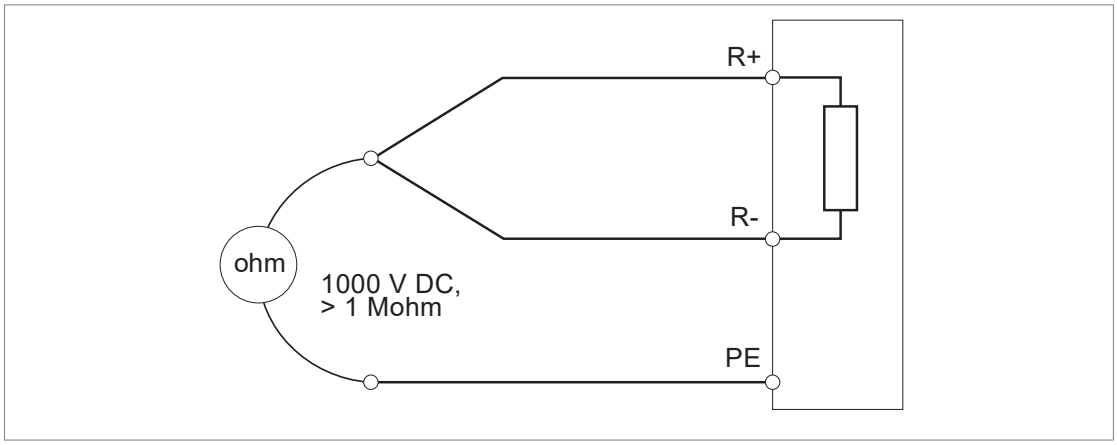

Connection diagram

See section Connecting the power cables (Page 101).

Connection procedure

- Connect the brake chopper via fuses to drive module terminals UDC+ and UDC-.
- Connect the resistor cables to the brake chopper terminals. If a shielded three-conductor cable with shield conductivity good enough for the protective earth (ground) conductor is used, cut the third conductor. If the shield conductivity is not good enough, use the third conductor as the PE conductor. Ground the twisted shield of the cable (protective earth conductor of the resistor assembly) as well as any separate PE conductor (if present) at both ends.
- Wire the thermal switch to the chopper enable input X1. Connect the fault indication relay output X3 on the chopper control board to digital input DIIL (XD2D:1) of the drive. In ACH580 HVAC control program, digital input DIIL is configured to parameter 20.12 Run enable 1 source by default. Parameter 20.11 Run enable stop mode is set to Coast. Any temperature failure in resistor or chopper cabinet will stop the drive (motor-side converter). It is not possible to start the drive while the chopper fault indication is on.

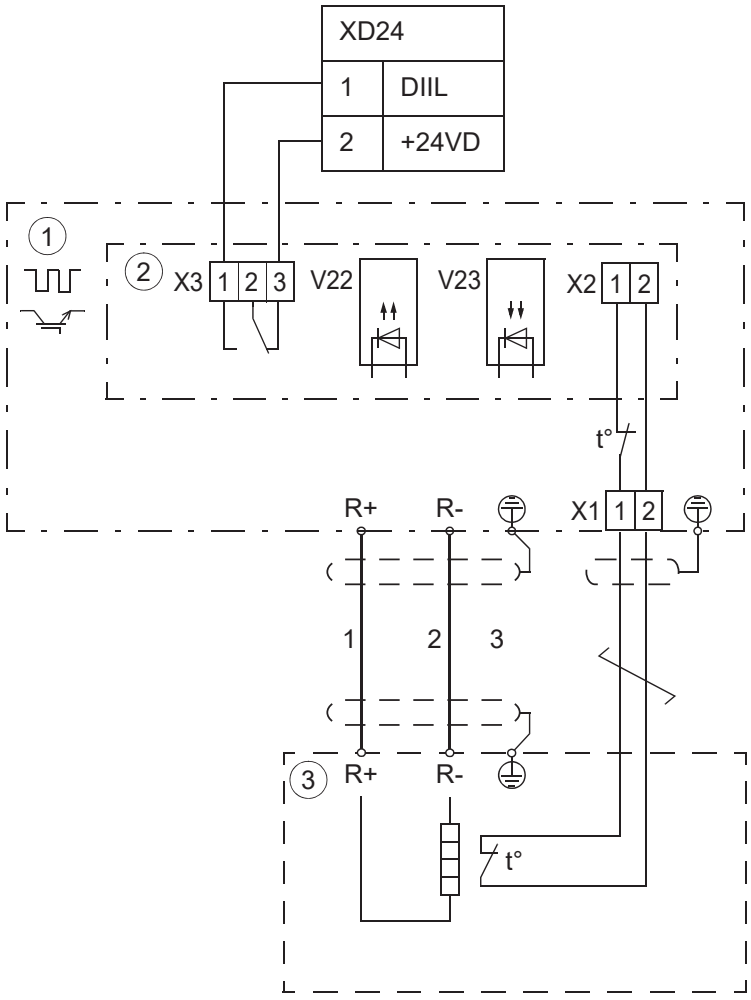

1	NBRA brake chopper
2	NBRC control board of the brake chopper
3	Brake resistor

WARNING!
Input terminal block X1 of the brake chopper is at intermediate circuit potential of the drive. This voltage is extremely dangerous and can cause serious damage or injury if the isolation level and protection conditions for the thermal switches are not sufficient. Insulate the thermal switches correctly (over 2.5 kV) and shroud them against contact. Use a cable with correct voltage rating.

Start-up

Set the following parameters (ACH580 HVAC control program): Make sure that

- parameter 20.12 Run enable 1 source is set to DIIL
- parameter 20.11 Run enable stop mode is set to Coast.

You can activate and configure an additional thermal protection function for the chopper and resistor. See the firmware manual.

Note: Some brake resistors are coated with oil film for protection. At the start-up, the coating burns off and produces a little bit of smoke. Make sure there is sufficient ventilation at the start-up.

Technical data

Contact ABB for more information.

25

Filters

Contents of this chapter

This chapter describes how to select d*u*/d*t* filters for the drive.

d*u*/d*t* filters

When is a d*u*/d*t* filter necessary?

See section Examining the compatibility of the motor and drive (Page 74).

Selection table

d*u*/d*t* filter types for the drive modules are given below.

ACH580-34-...	d*u*/d*t* filter type	ACH580-34-...	d*u*/d*t* filter type	ACH580-34-...	d*u*/d*t* filter type
U_n = 400 V, IEC		U_n = 480 V, IEC		U_n = 480 V, UL (NEC)	
246A-4	FOCH0260-7x	246A-4	FOCH0260-7x	240A-4	FOCH0260-7x
293A-4	FOCH0260-7x	293A-4	FOCH0320-50	302A-4	FOCH0320-5x
365A-4	FOCH0320-5x	365A-4	FOCH0320-50	361A-4	FOCH0320-5x
442A-4	FOCH0320-5x	442A-4	FOCH0320-50	414A-4	FOCH0320-5x
505A-4	FOCH0610-70	505A-4	FOCH0610-70	477A-4	FOCH0610-70
585A-4	FOCH0610-70	585A-4	FOCH0610-70	-	-
650A-4	FOCH0610-70	650A-4	FOCH0610-70	-	-

Ordering codes

Drive module type ACH580-34-	Ordering code
246A-4…725A-4	3AUA0000125245

Description, installation and technical data of the FOCH filters

See FOCH du/dt filters hardware manual (3AFE68577519 [English]).

26

CAIO-01 bipolar analog I/O adapter module

Contents of this chapter

This chapter describes how to install and start up the optional CAIO-01 multifunction extension module. The chapter also contains diagnostics and technical data.

Product overview

The CAIO-01 bipolar analog I/O module expands the inputs and outputs of the drive control unit. It has three bipolar current/voltage inputs and two unipolar current/voltage outputs. The inputs can handle positive and negative signals. The way the drive interprets the negative range of the inputs depends on the parameter settings of the drive. The voltage/current selection of the inputs is done with a parameter.

Layout

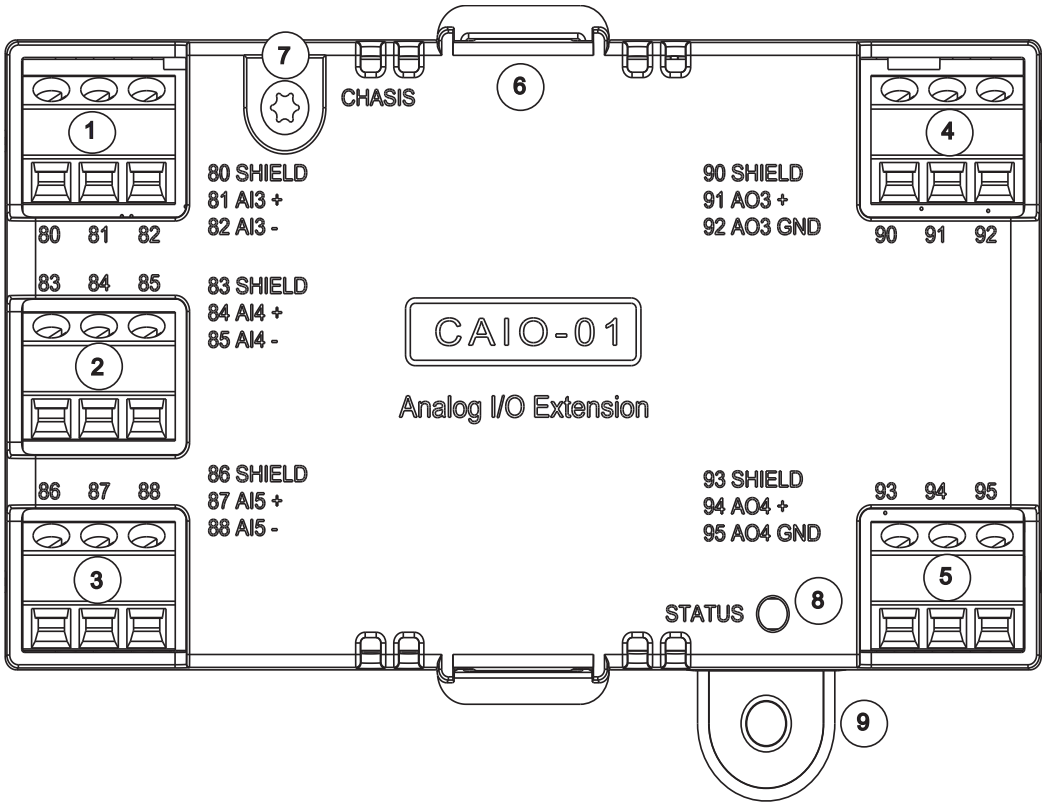

1, 2, 3	Analog inputs		4, 5	Analog outputs	
80	SHIELD	Cable shield connection	90	SHIELD	Cable shield connection
81	AI3+	Analog input 3 positive signal	91	AO3	Analog output 3 signal
82	AI3-	Analog input 3 negative signal	92	AGND	Analog ground potential
83	SHIELD	Cable shield connection	93	SHIELD	Cable shield connection
84	AI4+	Analog input 4 positive signal	94	AO4	Analog output 4 signal
85	AI4-	Analog input 4 negative signal	95	AGND	Analog ground potential
86	SHIELD	Cable shield connection			
87	AI5+	Analog input 5 positive signal			
88	AI5-	Analog input 5 negative signal			
6	Control unit slot interface				
7	Grounding hole				
8	Diagnostic LED				
9	Mounting hole				

Mechanical installation

Necessary tools

- Screwdriver and a set of suitable bits.

Unpacking and examining the delivery

1. Open the option package. Make sure that the package contains:
   - the option module
   - a mounting screw.
2. Make sure that there are no signs of damage.

Installing the module

See section Installing option modules (Page 109).

Electrical installation

WARNING!
Obey the safety instructions of the drive. If you ignore them, injury or death, or damage to the equipment can occur.

Stop the drive and do the steps in section Electrical safety precautions (Page 21) before you start the work.

Necessary tools

- Screwdriver and a set of suitable bits.

Wiring

Connect the external cables to the applicable module terminals. Ground the outer shield of the cables to the SHIELD terminal.

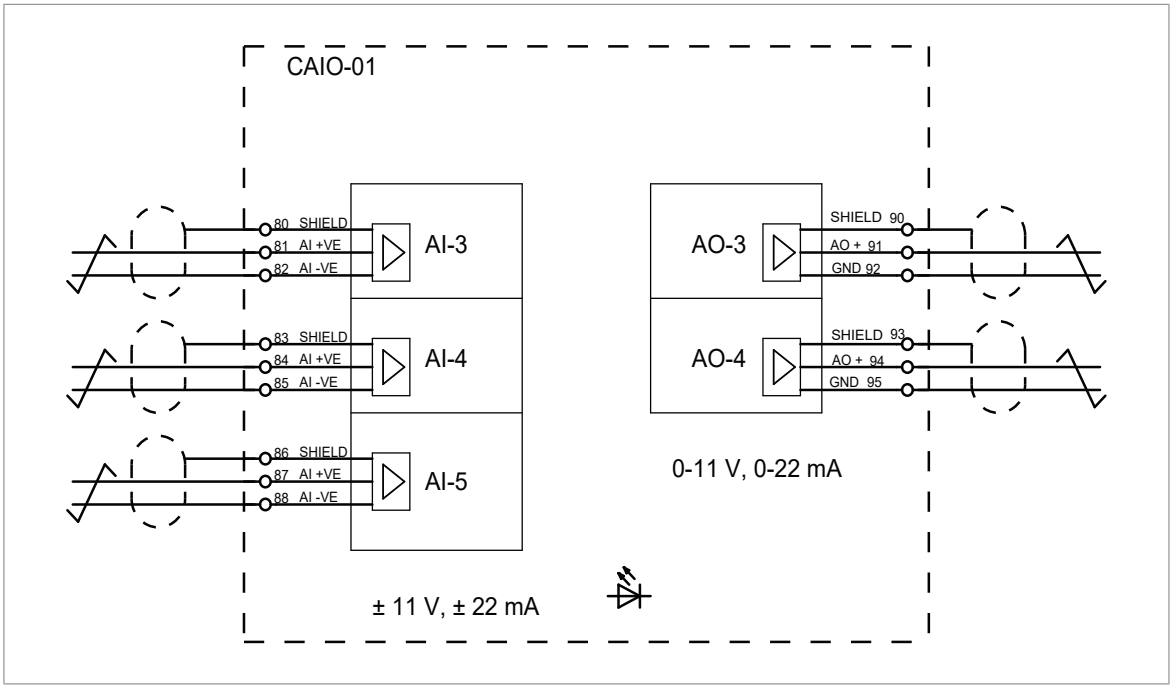

Start-up

Setting the parameters

1. Power up the drive.
2. If no warning is shown,
   - make sure that the value of both parameters 15.01 Extension module type and 15.02 Detected extension module is CAIO-01.

   If warning A7AB Extension I/O configuration failure is shown,
   - make sure that the value of 15.02 is CAIO-01
   - set the value of parameter 15.01 to CAIO-01.

   You can now see the parameters of the extension module in group 15 I/O extension module.
3. Set the parameters of analog inputs AI3, AI4, AI5 or analog outputs AO3 or AO4 to applicable values, see the firmware manual.

Example: To connect supervision 1 to AI3 of the extension module:

- Select the mode of the supervision function (32.05 Supervision function 1).
- Set limits for the supervision function (32.09 Supervision 1 low and 32.10 Supervision 1 high).
- Select the supervision action (32.06 Supervision 1 action).
- Connect 32.07 Supervision 1 signal to 15.52 AI3 scaled value.

Diagnostics

LEDs

The adapter module has one diagnostic LED.

Color	Description
Green	The adapter module is powered up.
Red	There is no communication with the drive control unit or the adapter module has detected an error.

Technical data

Installation	Into slot 2 of drive control unit
Degree of protection	IP20 / UL 1 Type
Ambient conditions	See the drive technical data.
Package	Cardboard
Analog inputs (80..82, 83..85, 86..88)	
Maximum wire size	1.5 mm^2
Input voltage (AI+ and AI-)	-11 V … +11 V
Input current (AI+ and AI-)	-22 mA … +22 mA
Input resistance	>200 kohm (voltage mode), 100 ohm (current mode)
Optional cable shield connections	
Analog outputs (90..92, 93..95)	

Maximum wire size	1.5 mm^2
Output voltage (AO+ and AO-)	0 V … +11 V
Output current (AO+ and AO-)	0 mA … +22 mA
Output resistance	< 20 ohm
Recommended load	>10 kohm
Inaccuracy	± 1% Typical, ± 1.5% Max of full-scale value
Optional cable shield connections	

Isolation areas

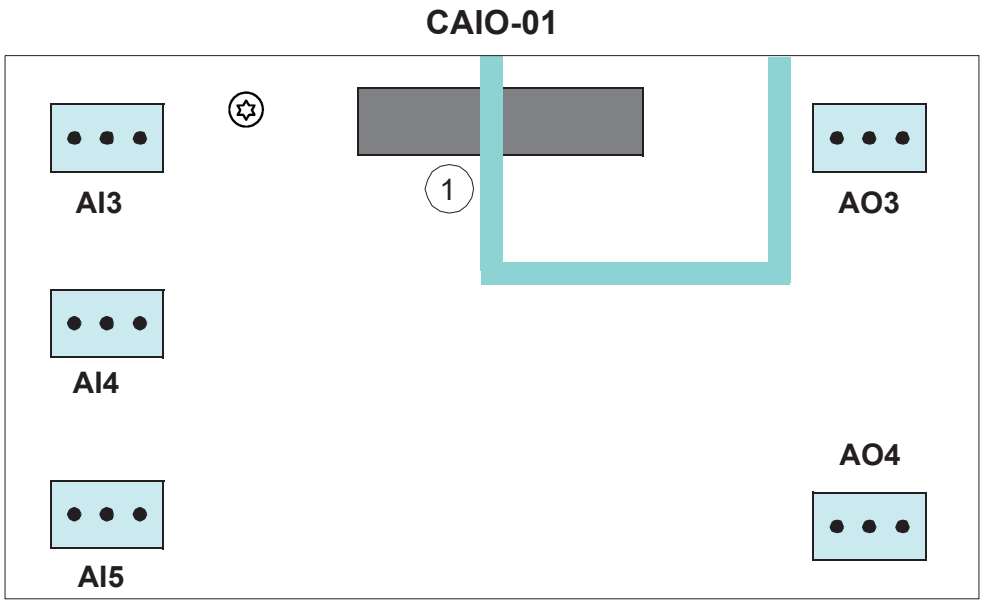

1	Plugged to drive control unit SLOT 2
	Reinforced insulation (IEC 61800-5-1:2007)

Dimension drawings

The dimensions are in millimeters.

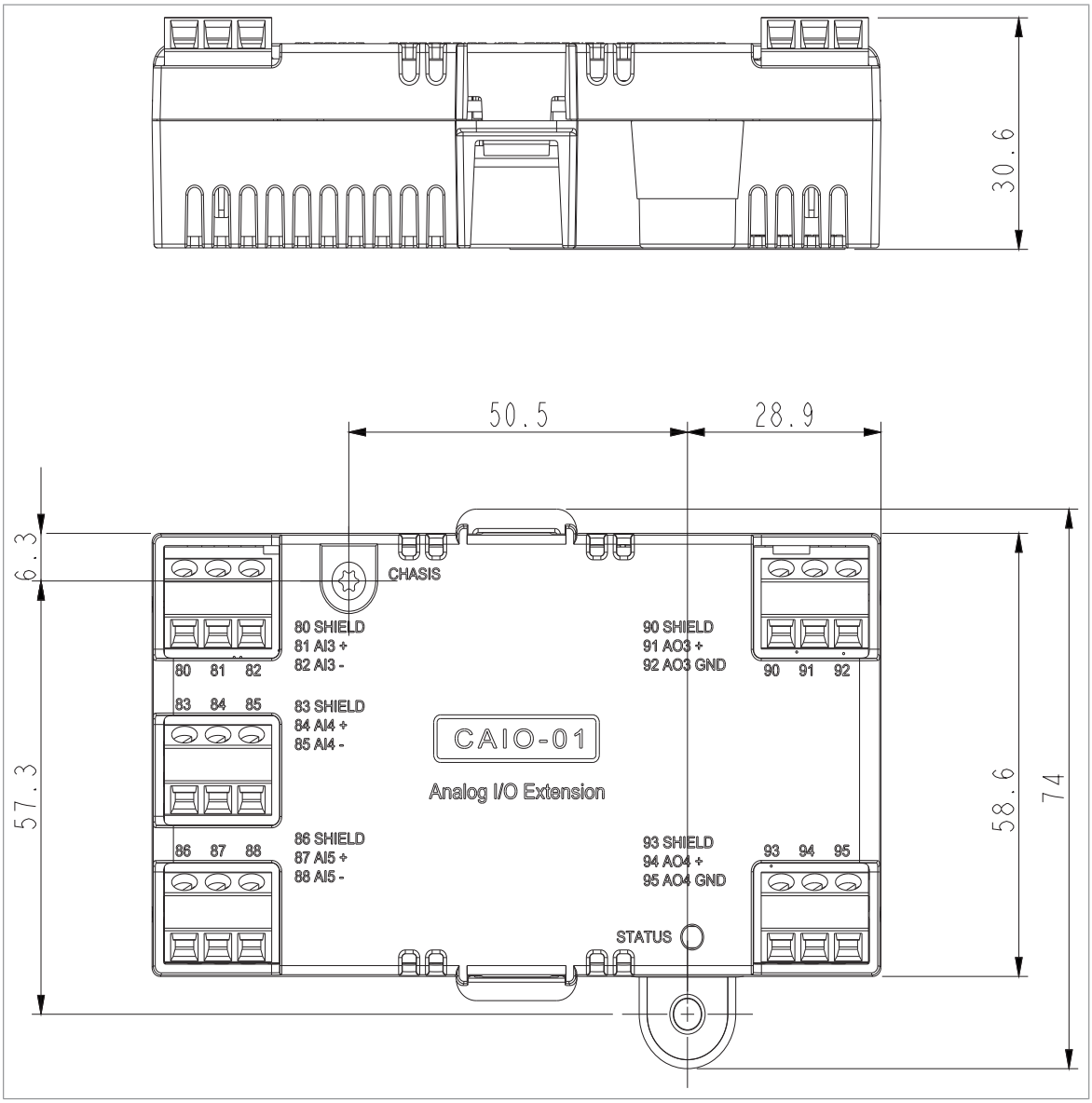

27

CHDI-01 115/230 V digital input extension module

Contents of this chapter

This chapter describes how to install and start up the optional CHDI-01 multifunction extension module. The chapter also contains diagnostics and technical data.

Product overview

The CHDI-01 115/230 V digital input extension module expands the inputs of the drive control unit. It has six high voltage inputs and two relay outputs.

Layout and connection examples

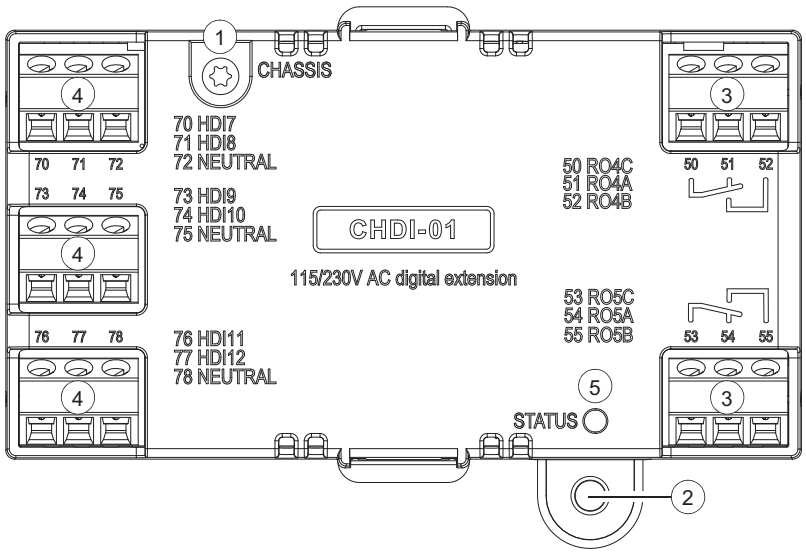

4	3-pin terminal blocks for 115/230 V inputs		3	Relay outputs	
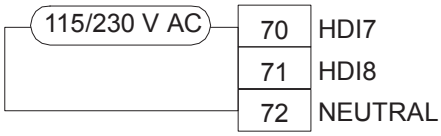			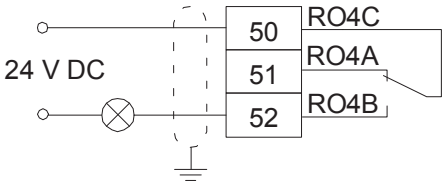		
70	HDI7	115/230 V input 1	50	RO4C	Common, C
71	HDI8	115/230 V input 2	51	RO4B	Normally closed, NC
72	NEUTRAL [1]	Neutral point	52	RO4A	Normally open, NO
73	HDI9	115/230 V input 3	53	RO5C	Common, C
74	HDI10	115/230 V input 4	54	RO5B	Normally closed, NC
75	NEUTRAL [1]	Neutral point	55	RO5A	Normally open, NO
76	HDI11	115/230 V input 5	1	**Grounding screw**	
77	HDI12	115/230 V input 5	2	**Hole for mounting screw**	
78	NEUTRAL [1]	Neutral point	5	**Diagnostic LED**. Green = The extension module is powered up.	
[1] Neutral points 72, 75 and 78 are connected.					

Mechanical installation

Necessary tools

- Screwdriver and a set of suitable bits.

Unpacking and examining the delivery

1. Open the option package. Make sure that the package contains:
   - the option module
   - a mounting screw.
2. Make sure that there are no signs of damage.

Installing the module

See section Installing option modules (Page 109).

Electrical installation



WARNING!
Obey the safety instructions of the drive. If you ignore them, injury or death, or damage to the equipment can occur.

Stop the drive and do the steps in section Electrical safety precautions (Page 21) before you start the work.

Necessary tools

- Screwdriver and a set of suitable bits.

Wiring

Connect the external control cables to the applicable module terminals. Ground the outer shield of the control cables at the cabinet entry.

Start-up

Setting the parameters

1. Power up the drive.
2. If no warning is shown,
   - make sure that the value of both parameters 15.01 Extension module type and 15.02 Detected extension module is CHDI-01.

   If warning the A7AB Extension I/O configuration failure is shown,
   - make sure that the value of parameter 15.02 is CHDI-01.
   - set parameter 15.01 value to CHDI-01.

   You can now see the parameters of the extension module in parameter group 15 I/O extension module.
3. Set the parameters of the extension module to applicable values.

Parameter setting example for relay output

This example shows how make the relay output RO4 of the extension module indicate the reverse direction of rotation of the motor with a one-second delay.

Parameter	Setting
15.07 RO4 source	Reverse
15.08 RO4 ON delay	1 s
15.09 RO4 OFF delay	1 s

Fault and warning messages

Warning A7AB Extension I/O configuration failure.

Technical data

Installation	Into an option slot on the drive control unit
Degree of protection	IP20 / UL Type 1
Ambient conditions	See the drive technical data.
Package	Cardboard
Reley outputs (50…52, 53…55)	
Maximum wire size	1.5 mm^2
Minimum contact rating	12 V / 10 mA
Maximum contact rating	250 V AC / 30 V DC / 2 A
Maximum breaking capacity	1500 VA
115/230 V inputs (70…78)	
Maximum wire size	1.5 mm^2
Input voltage	115 to 230 V AC ±10%
Maximum current leakage in digital off state	2 mA
Isolation areas	
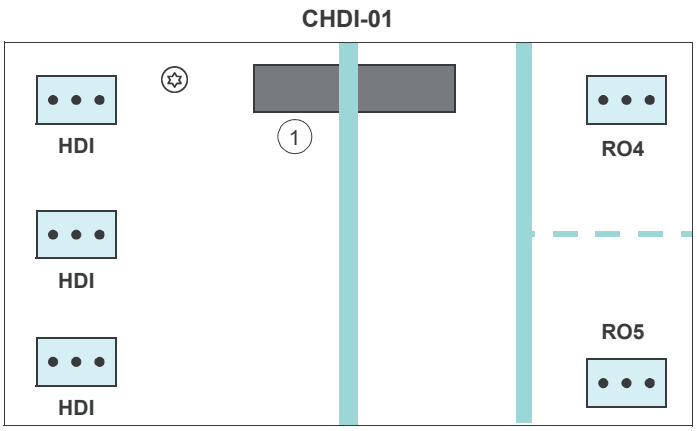	
1	Plugged to drive **SLOT2**
	Reinforced insulation (IEC 61800-5-1:2007)
	Functional insulation (IEC 61800-5-1:2007)

Dimension drawing

The dimensions are in millimeters and [inches].

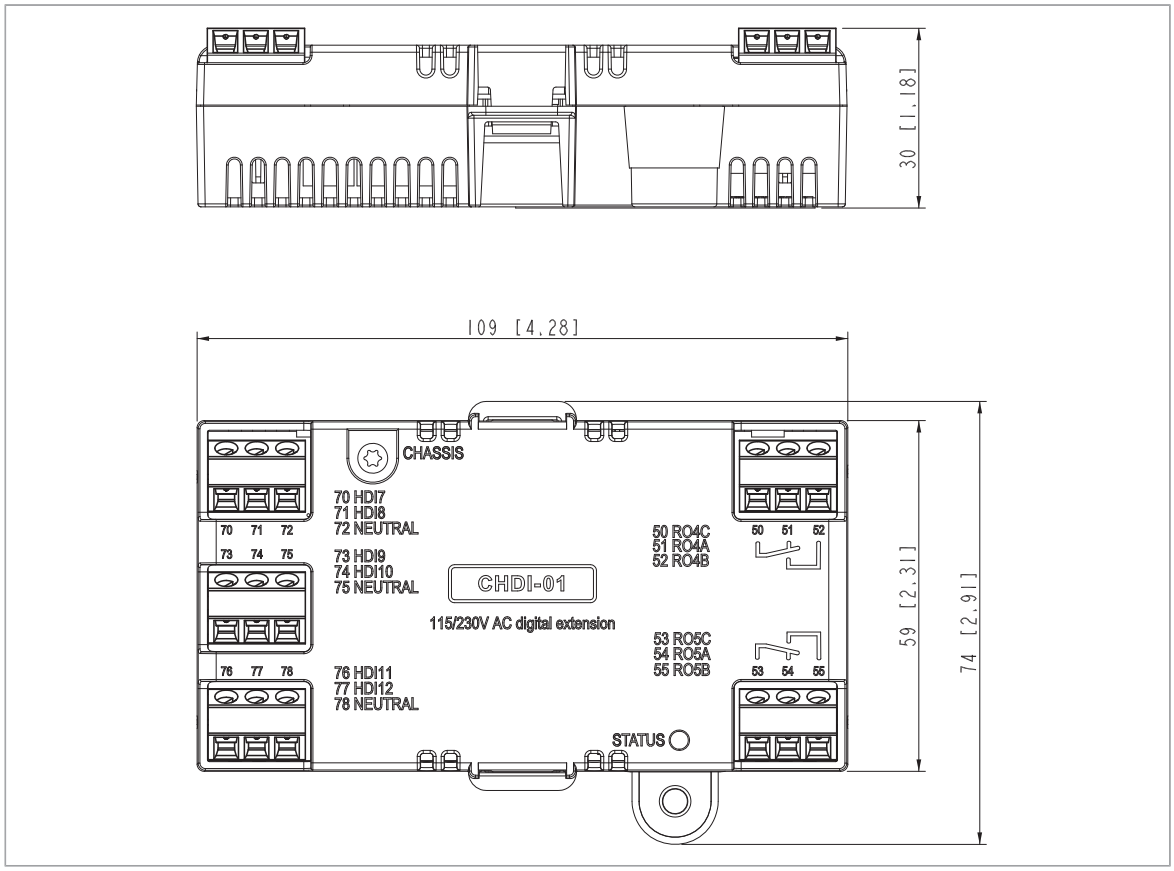
30 [1.18]
109 [4.28]
CHASSIS
70 HDI7
71 HDI8
72 NEUTRAL
73 HDI9
74 HDI10
75 NEUTRAL
76 HDI11
77 HDI12
78 NEUTRAL
70 71 72
73 74 75
76 77 78
CHDI-01
115/230V AC digital extension
50 RO4C
51 RO4A
52 RO4B
53 RO5C
54 RO5A
55 RO5B
50 51 52
53 54 55
STATUS
59 [2.31]
74 [2.91]

28

CMOD-01 multifunction extension module (external 24 V AC/DC and digital I/O)

Contents of this chapter

This chapter describes how to install and start up the optional CMOD-01 multifunction extension module. The chapter also contains diagnostics and technical data.

Product overview

The CMOD-01 multifunction extension module (external 24 V AC/DC and digital I/O) expands the outputs of the drive control unit. It has two relay outputs and one transistor output, which can operate as a digital or frequency output.

In addition, the extension module has an external power supply interface, which can be used to power up the drive control unit in case the drive power supply is not on. If you do not need the backup power supply, you do not have to connect it because the module is powered from the drive control unit by default.

With CCU-24 control unit, a CMOD-01 module is not necessary for external 24 V AC/DC supply connection. The external supply is connected directly to terminals 40 and 41 on the control unit.

Layout and example connections

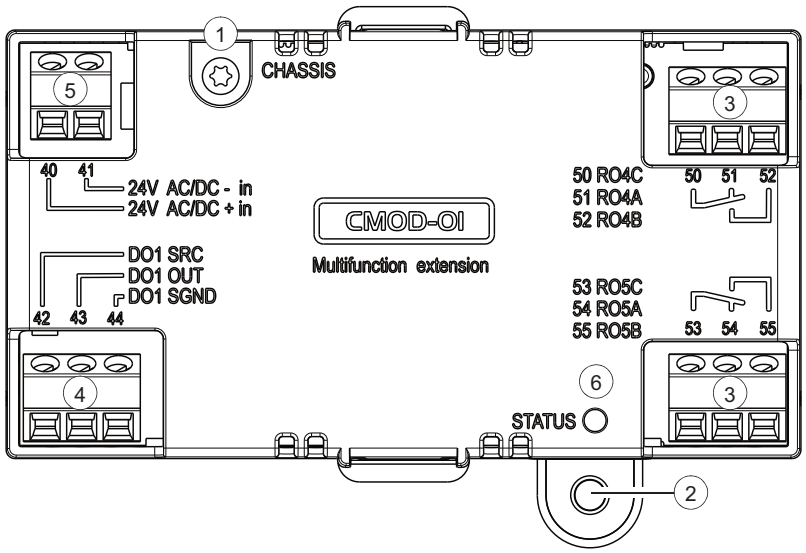

1	**Grounding screw**		**6**	**Diagnostic LED**	
2	**Hole for mounting screw**				
5	**2-pin terminal block for external power supply**		**3**	**3-pin terminal blocks for relay outputs**	
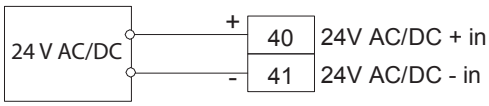			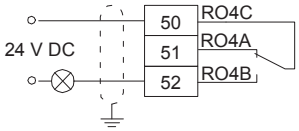		
40	24 V AC/DC + in	External 24 V (AC/DC) input	50	RO4C	Common, C
41	24 V AC/DC - in	External 24 V (AC/DC) input	51	RO4A	Normally closed, NC
4	**3-pin terminal block for for transistor output**		52	RO4B	Normally open, NO
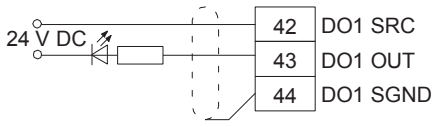 1) 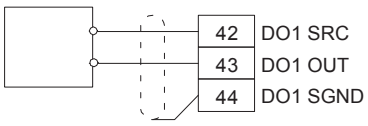 2)					
42	DO1 SRC	Source input	53	RO5C	Common, C
43	DO1 OUT	Digital or frequency output	54	RO5A	Normally closed, NC
44	DO1 SGND	Ground (earth) potential	55	RO5B	Normally open, NO

1) Digital output connection example

2) An externally supplied frequency indicator which provides, for example:
- a 40 mA / 12 V DC power supply for the sensor circuit (CMOD frequency output)
- suitable voltage pulse input (10 Hz … 16 kHz).

Mechanical installation

Necessary tools

- Screwdriver and a set of suitable bits.

Unpacking and examining the delivery

1. Open the option package. Make sure that the package contains:
   - the option module
   - a mounting screw.
2. Make sure that there are no signs of damage.

Installing the module

See section Installing option modules (Page 109).

Electrical installation



WARNING!
Obey the safety instructions of the drive. If you ignore them, injury or death, or damage to the equipment can occur.

Stop the drive and do the steps in section Electrical safety precautions (Page 21) before you start the work.

Necessary tools

- Screwdriver and a set of suitable bits

Wiring

Connect the external control cables to the applicable module terminals. Ground the outer shield of the control cables at the cabinet entry.



WARNING!
Do not connect the +24 V AC cable to the control unit ground when the control unit is powered using an external 24 V AC supply.

Start-up

Setting the parameters

1. Power up the drive.
2. If no warning is shown,
   - make sure that the value of both parameters 15.01 Extension module type and 15.02 Detected extension module is CMOD-01.

   If the warning A7AB Extension I/O configuration failure is shown,
   - make sure that the value of parameter 15.02 is CMOD-01.
   - set the parameter 15.01 value to CMOD-01.

   You can now see the parameters of the extension module in parameter group 15 I/O extension module.
3. Set the parameters of the extension module to applicable values.

Examples are given below.

Parameter setting example for relay output

This example shows how make relay output RO4 of the extension module indicate the reverse direction of rotation of the motor with a one-second delay.

Parameter	Setting
15.07 RO4 source	Reverse
15.08 RO4 ON delay	1 s
15.09 RO4 OFF delay	1 s

Parameter setting example for digital output

This example shows how to make digital output DO1 of the extension module indicate the reverse direction of rotation of the motor with a one-second delay.

Parameter	Setting
15.22 DO1 configuration	Digital output
15.23 DO1 source	Reverse
15.24 DO1 ON delay	1 s
15.25 DO1 OFF delay	1 s

Parameter setting example for frequency output

This example shows how to make digital output DO1 of the extension module indicate the motor speed 0…1500 rpm with a frequency range of 0…10000 Hz.

Parameter	Setting
15.22 DO1 configuration	Frequency output
15.33 Freq out 1 source	01.01 Motor speed used
15.34 Freq out 1 src min	0
15.35 Freq out 1 src max	1500.00
15.36 Freq out 1 at src min	0 Hz
15.37 Freq out 1 at src max	10000 Hz

Diagnostics

Faults and warning messages

Warning A7AB Extension I/O configuration failure.

LEDs

The extension module has one diagnostic LED.

Color	Description
Green	The extension module is powered up.

Technical data

Installation	Into an option slot on the drive control unit
Degree of protection	IP20 / UL Type 1

Ambient conditions	See the drive technical data.
Package	Cardboard
Reley outputs (50…52, 53…55)	
Maximum wire size	1.5 mm²
Minimum contact rating	12 V / 10 mA
Maximum contact rating	250 V AC / 30 V DC / 2 A
Maximum breaking capacity	1500 VA
Transistor output (42…44)	
Maximum wire size	1.5 mm²
Type	Transistor output PNP
Maximum load	4 kohm
Maximum switching voltage	30 V DC
Maximum switching current	100 mA / 30 V DC, short-circuit protected
Frequency	10 Hz … 16 kHz
Resolution	1 Hz
Inaccuracy	0.2%
External power supply (40…41)	
Maximum wire size	1.5 mm²
Input voltage	24 V AC / V DC ±10% (GND, user potential)
Maximum power consumption	25 W, 1.04 A at 24 V DC
Isolation areas	
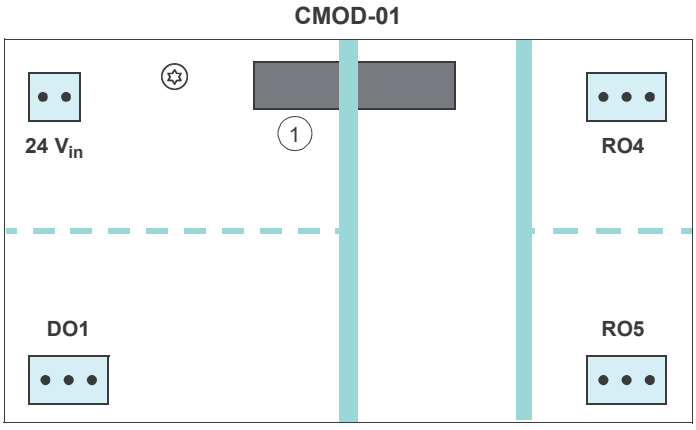	
1	Plugged to drive **SLOT2**
	Reinforced insulation (IEC 61800-5-1:2007)
	Functional insulation (IEC 61800-5-1:2007)

Dimension drawing

The dimensions are in millimeters and [inches].

252 CMOD-01 multifunction extension module (external 24 V AC/DC and digital I/O)

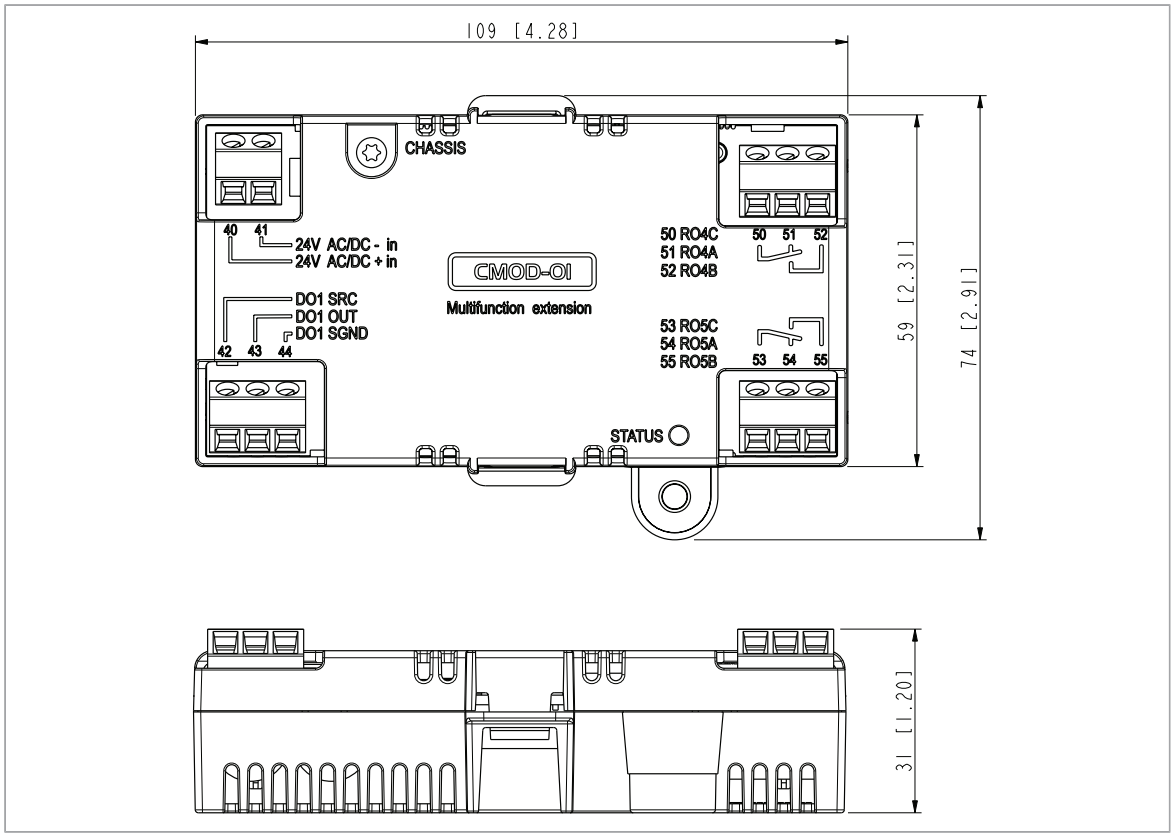

29

CMOD-02 multifunction extension module (external 24 V AC/DC and isolated PTC interface)

Contents of this chapter

This chapter describes how to install and start up the optional CMOD-02 multifunction extension module. The chapter also contains diagnostics and technical data.

Product overview

The CMOD-02 multifunction extension module (external 24 V AC/DC and isolated PTC interface) has a motor thermistor connection for supervising the motor temperature and one relay output, which indicates the thermistor status. In case the thermistor overheats, the drive trips on motor overtemperature. If Safe torque off tripping is required, the user must wire the overtemperature indication relay to the certified Safe torque off input of the drive.

In addition, the extension module has an external power supply interface, which can be used to power up the drive control unit in case the drive power supply is not on. If you do not need the back-up power supply, you do not have to connect it because the module is powered from the drive control unit by default.

There is reinforced insulation between the motor thermistor connection, the relay output and the drive control unit interface. Thus, you can connect a motor thermistor to the drive through the extension module.

With CCU-24 control unit, a CMOD-02 module is not necessary for external 24 V AC/DC supply connection. The external supply is connected directly to terminals 40 and 41 on the control unit.

Layout and example connections

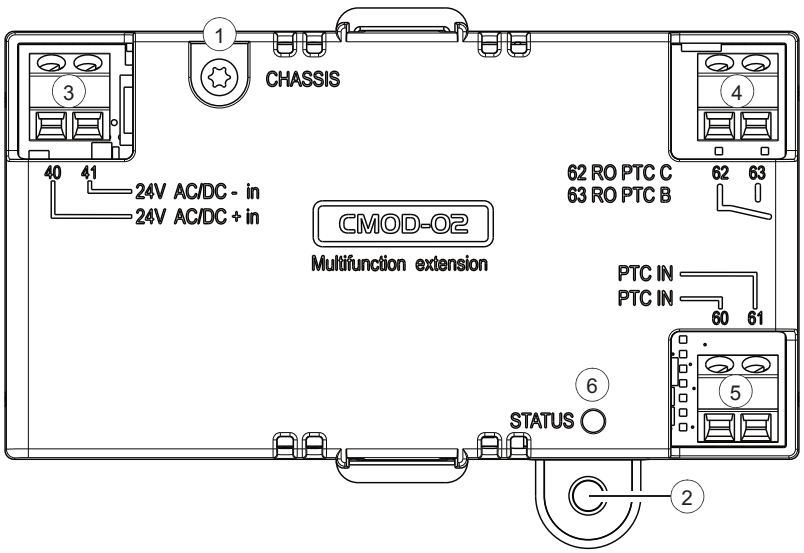

3	2-pin terminal block for external power supply		4	2-pin terminal block for relay output	
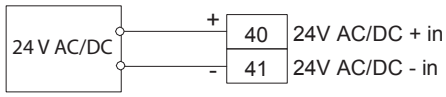			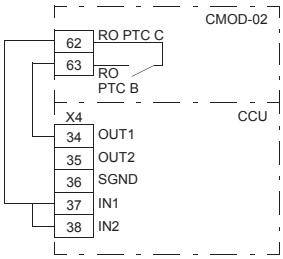		
40	24 V AC/DC + in	External 24 V (AC/DC) input	62	RO PTC C	Common, C
41	24 V AC/DC - in	External 24 V (AC/DC) input	63	RO PTC B	Normally open, NO
5	**Motor thermistor connection**		**1**	**Grounding screw**	
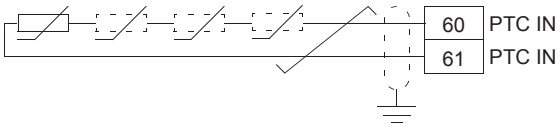 One to six PTC thermistors connected in series.					
60	PTC IN	PTC connection	**2**	**Hole for mounting screw**	
61	PTC IN	Ground (earth) potential	**6**	**Diagnostic LED**	

Mechanical installation

Necessary tools

- Screwdriver and a set of suitable bits.

Unpacking and examining the delivery

1. Open the option package. Make sure that the package contains:
   - the option module
   - a mounting screw.
2. Make sure that there are no signs of damage.

Installing the module

See section Installing option modules (Page 109).

Electrical installation



WARNING!
Obey the safety instructions of the drive. If you ignore them, injury or death, or damage to the equipment can occur.

Stop the drive and do the steps in section Electrical safety precautions (Page 21) before you start the work.

Necessary tools

- Screwdriver and a set of suitable bits

Wiring

Connect the external control cables to the applicable module terminals. Ground the outer shield of the control cables at the cabinet entry.



WARNING!
Do not connect the +24 V AC cable to the control unit ground when the control unit is powered using an external 24 V AC supply.

Start-up

Setting the parameters

1. Power up the drive.
2. If no warning is shown,
   - make sure that the values of both parameters 15.01 Extension module type and 15.02 Detected extension module are CMOD-02.

   If the warning A7AB Extension I/O configuration failure is shown,
   - make sure that the value of parameter 15.02 is CMOD-02.
   - set the parameter 15.01 value to CMOD-02.

   You can now see the parameters of the extension module in parameter group 15 I/O extension module.

Diagnostics

Faults and warning messages

Warning A7AB Extension I/O configuration failure.

LEDs

The extension module has one diagnostic LED.

Color	Description
Green	The extension module is powered up.

Technical data

Installation	Into option slot 2 on the drive control unit
Degree of protection	IP20 / UL Type 1
Ambient conditions	See the drive technical data.
Package	Cardboard
Motor thermistor connection (60…61)	
Maximum wire size	1.5 mm^2
Supported standards	DIN 44081 and DIN 44082
Triggering threshold	3.6 kohm ±10%
Recovery threshold	1.6 kohm ±10%
PTC terminal voltage	≤ 5.0 V
PTC terminal current	< 1 mA
Short-circuit detection	< 50 ohm ±10%
The PTC input is reinforced/double insulated. If the motor part of the PTC sensor and wiring are reinforced/double insulated, voltages on the PTC wiring are within SELV limits. If the motor PTC circuit is not reinforced/double insulated (ie, it is basic insulated), it is mandatory to use reinforced/double insulated wiring between the motor PTC and CMOD-02 PTC terminal.	
Relay output (62…63)	
Maximum wire size	1.5 mm^2
Maximum contact rating	250 V AC / 30 V DC / 5 A
Maximum breaking capacity	1000 VA
External power supply (40…41)	
Maximum wire size	1.5 mm^2
Input voltage	24 V AC / V DC ±10% (GND, user potential)
Maximum power consumption	25 W, 1.04 A at 24 V DC

Isolation areas	
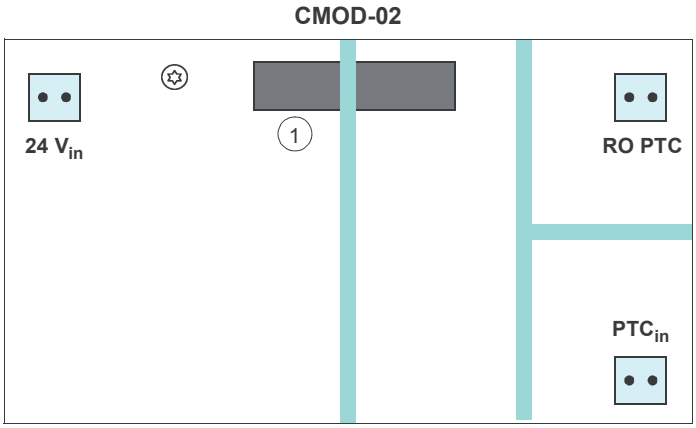	
1	Plugged to drive **SLOT2**
	Reinforced insulation (IEC 61800-5-1:2007)
	Functional insulation (IEC 61800-5-1:2007)

Dimension drawing

The dimensions are in millimeters and [inches].

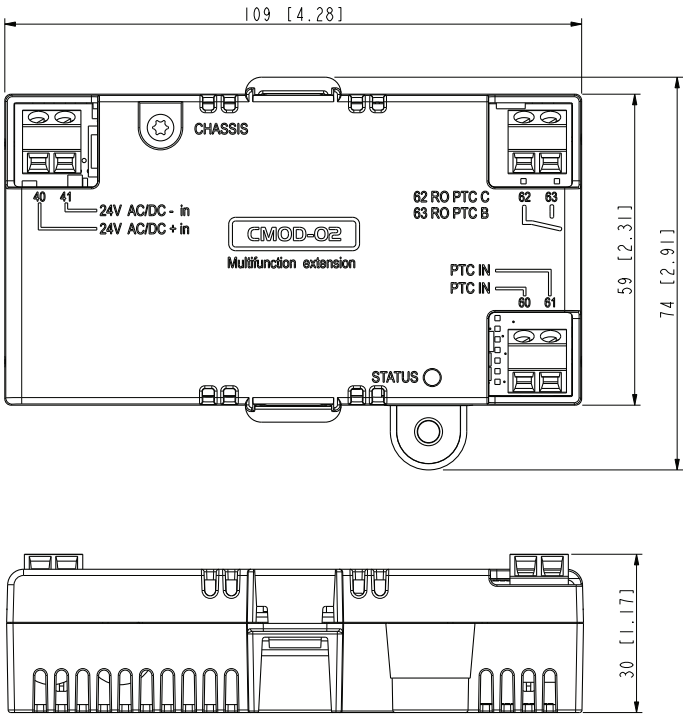

Step-by-step drawings for an installation example in Rittal VX25 800 mm wide enclosure

See:

- Handling the drive module, power cable connection diagram (Page 259)
- Installing the drive module and LCL filter module into a Rittal VX25 enclosure (Page 260)
- Connecting the motor cables and installing the shrouds (Page 265)
- Connecting the input power cables and installing the shrouds (Page 268)
- Installing the air baffles and removing the cardboard covers (Page 270)

Handling the drive module, power cable connection diagram

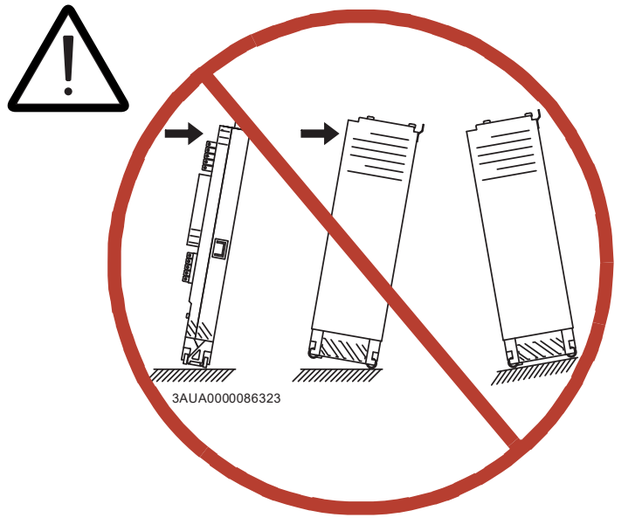

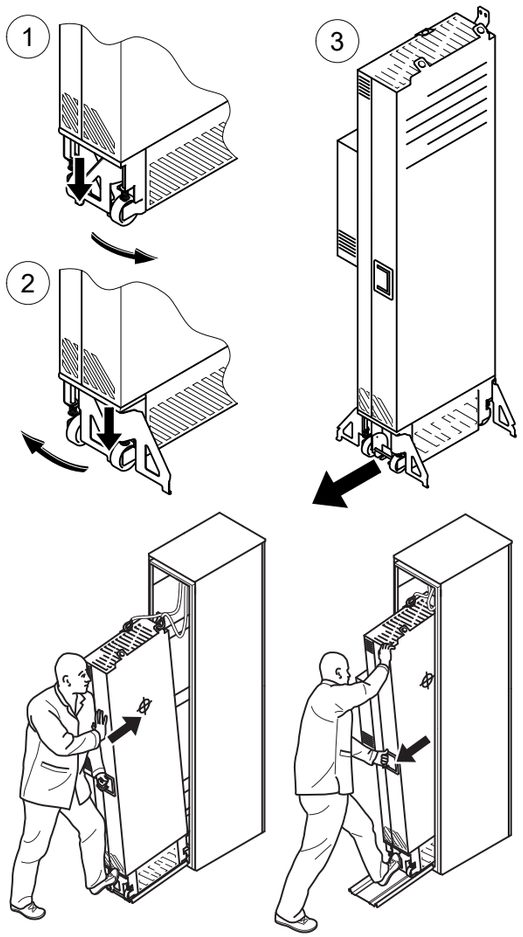

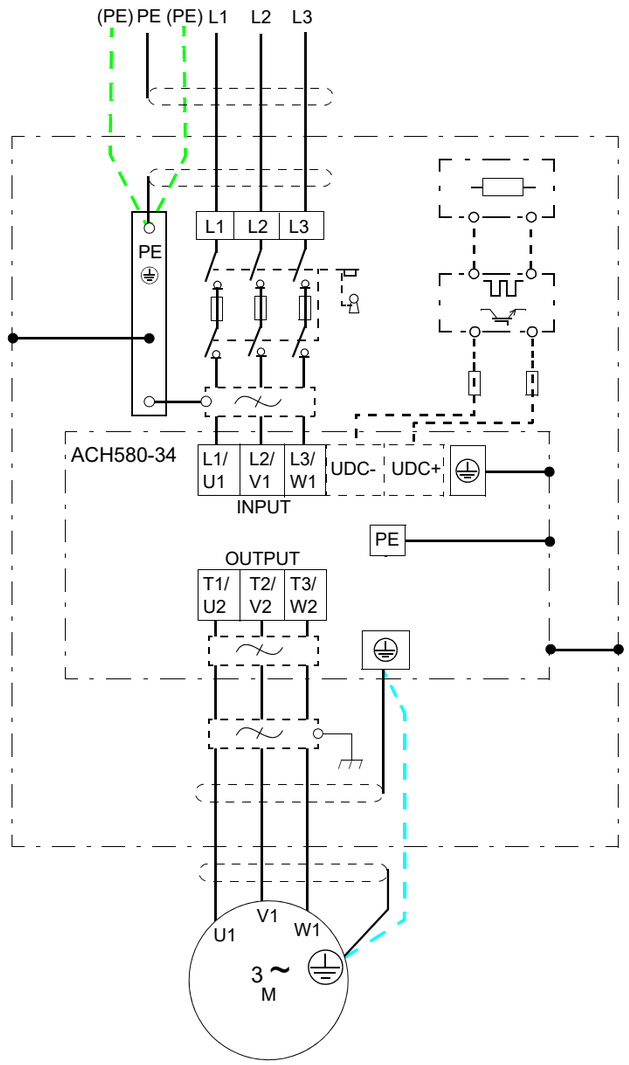

WARNING! The UDC+ and UDC- terminals of the drive module must not be used for any other than optional external brake chopper connection.

Installing the drive module and LCL filter module into a Rittal VX25 enclosure

See instructions in section Installing the drive module and LCL filter module into an enclosure (Page 137).

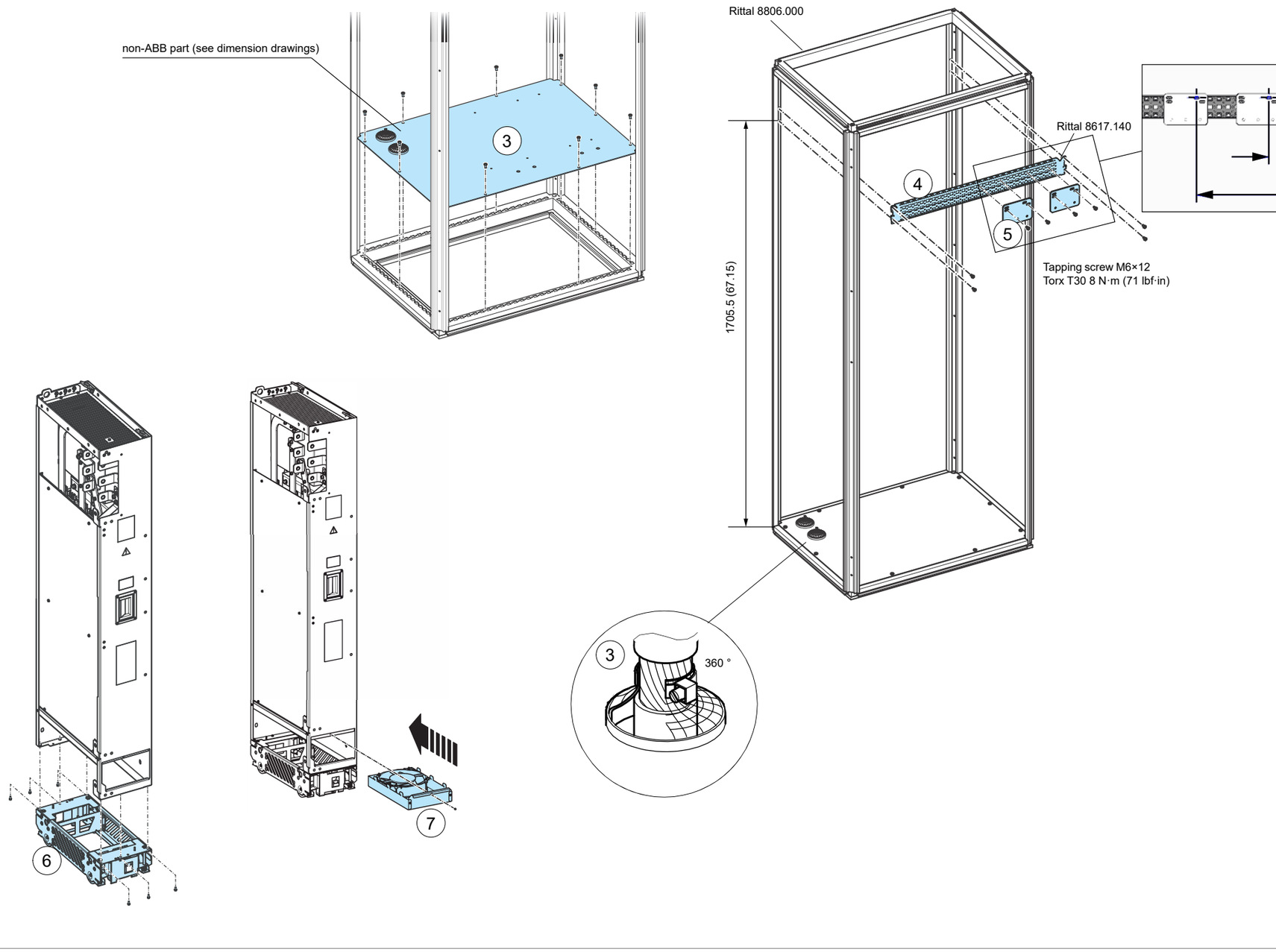

262 Step-by-step drawings for an installation example in Rittal VX25 800 mm wide enclosure

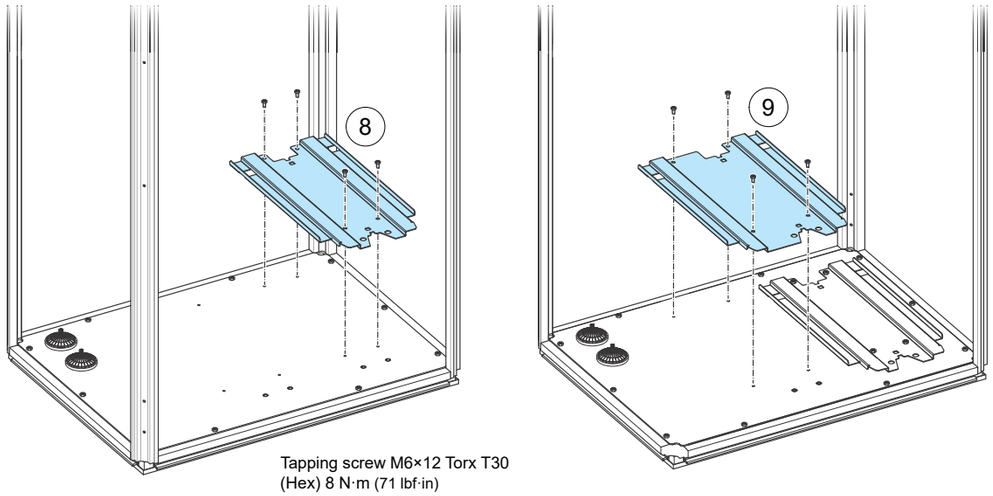

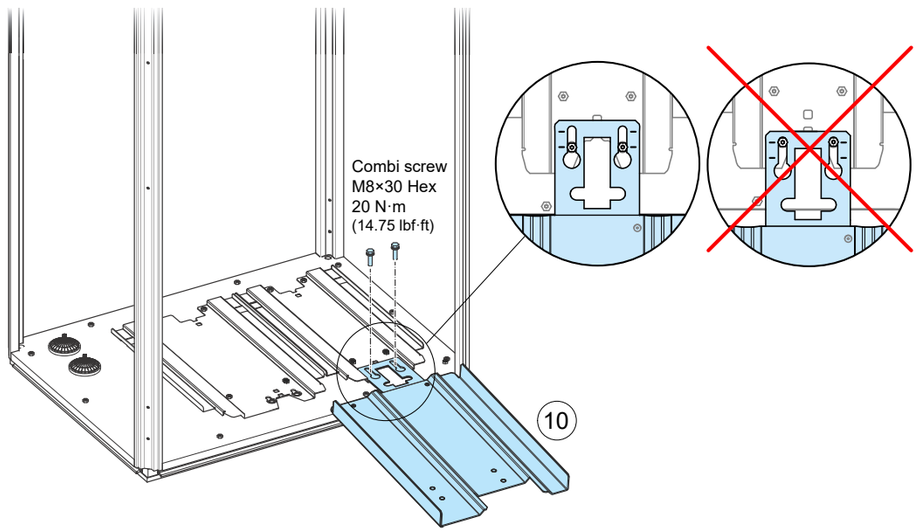

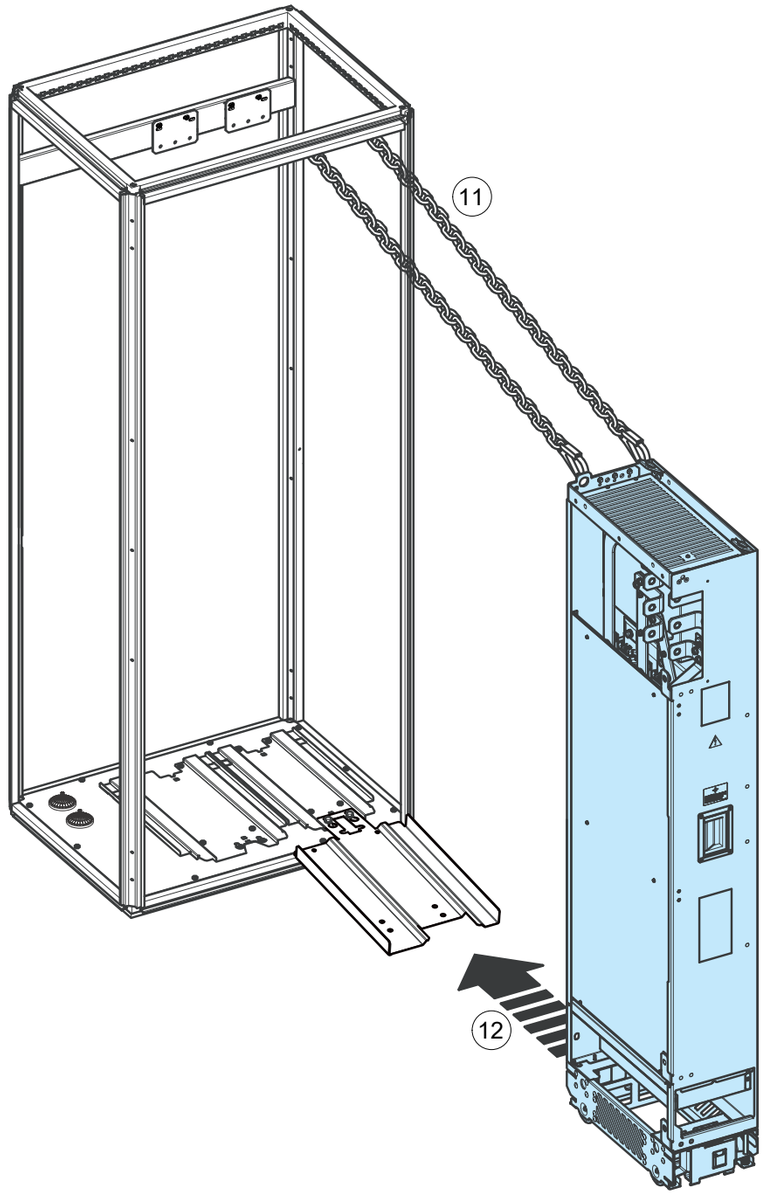

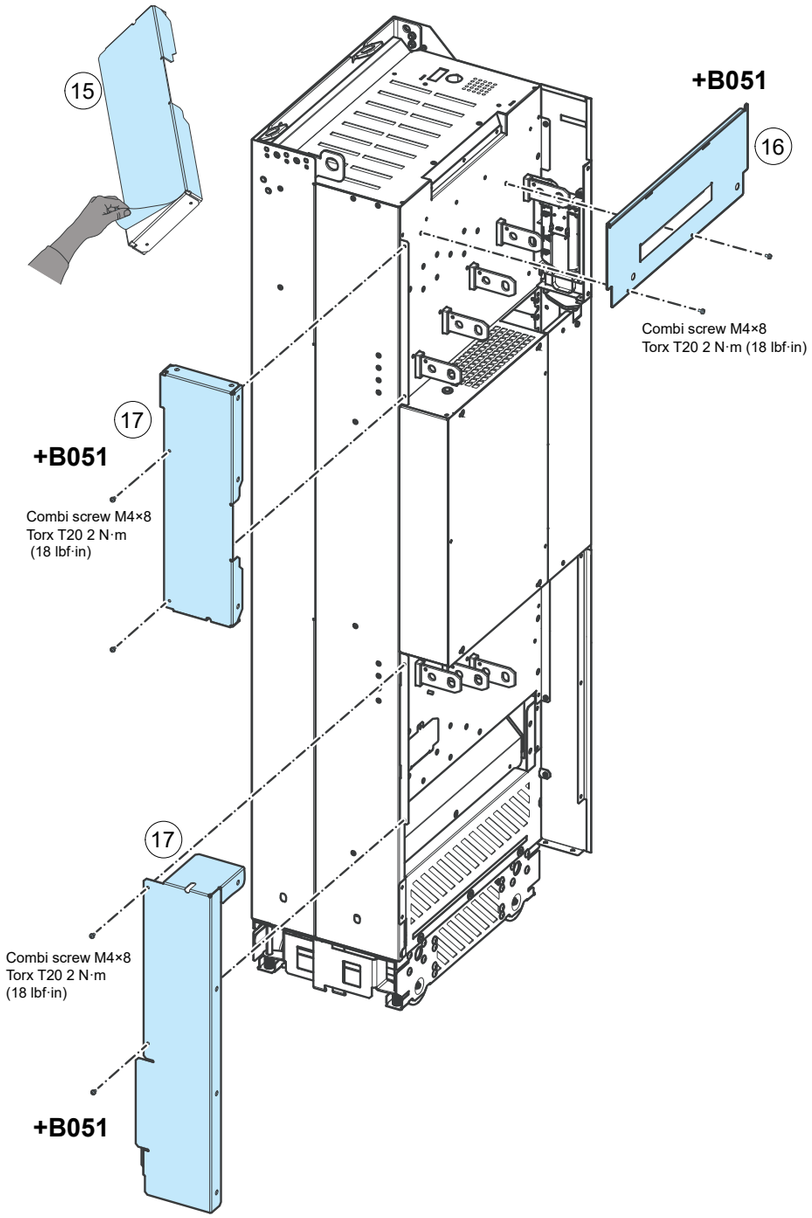
15
+B051
16
Combi screw M4×8
Torx T20 2 N·m (18 lbf·in)
17
+B051
Combi screw M4×8
Torx T20 2 N·m
(18 lbf·in)
17
Combi screw M4×8
Torx T20 2 N·m
(18 lbf·in)
+B051

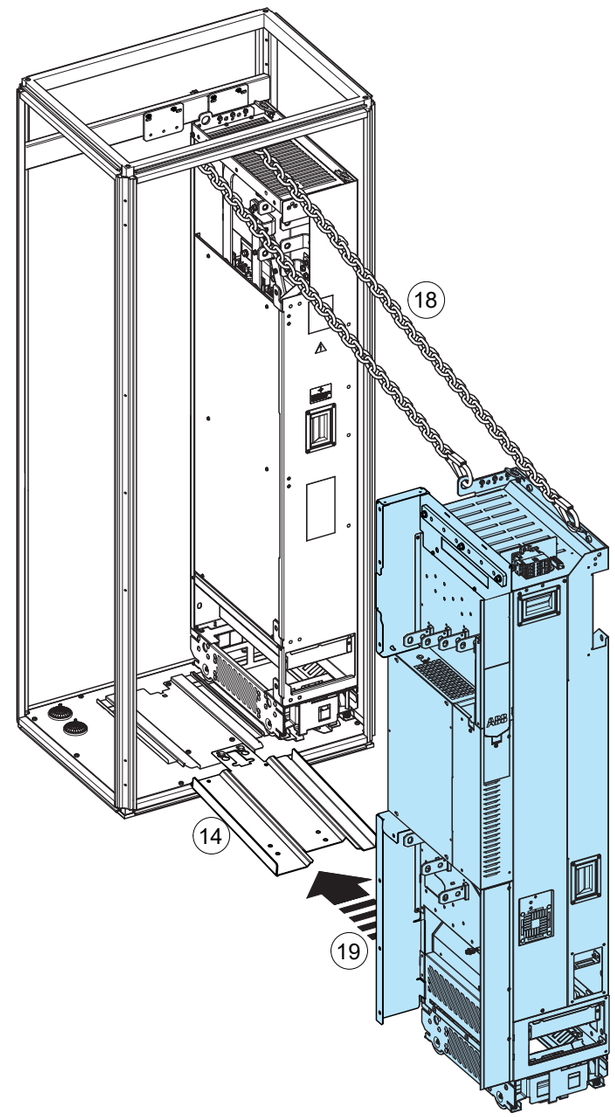
18
14
19

264 Step-by-step drawings for an installation example in Rittal VX25 800 mm wide enclosure

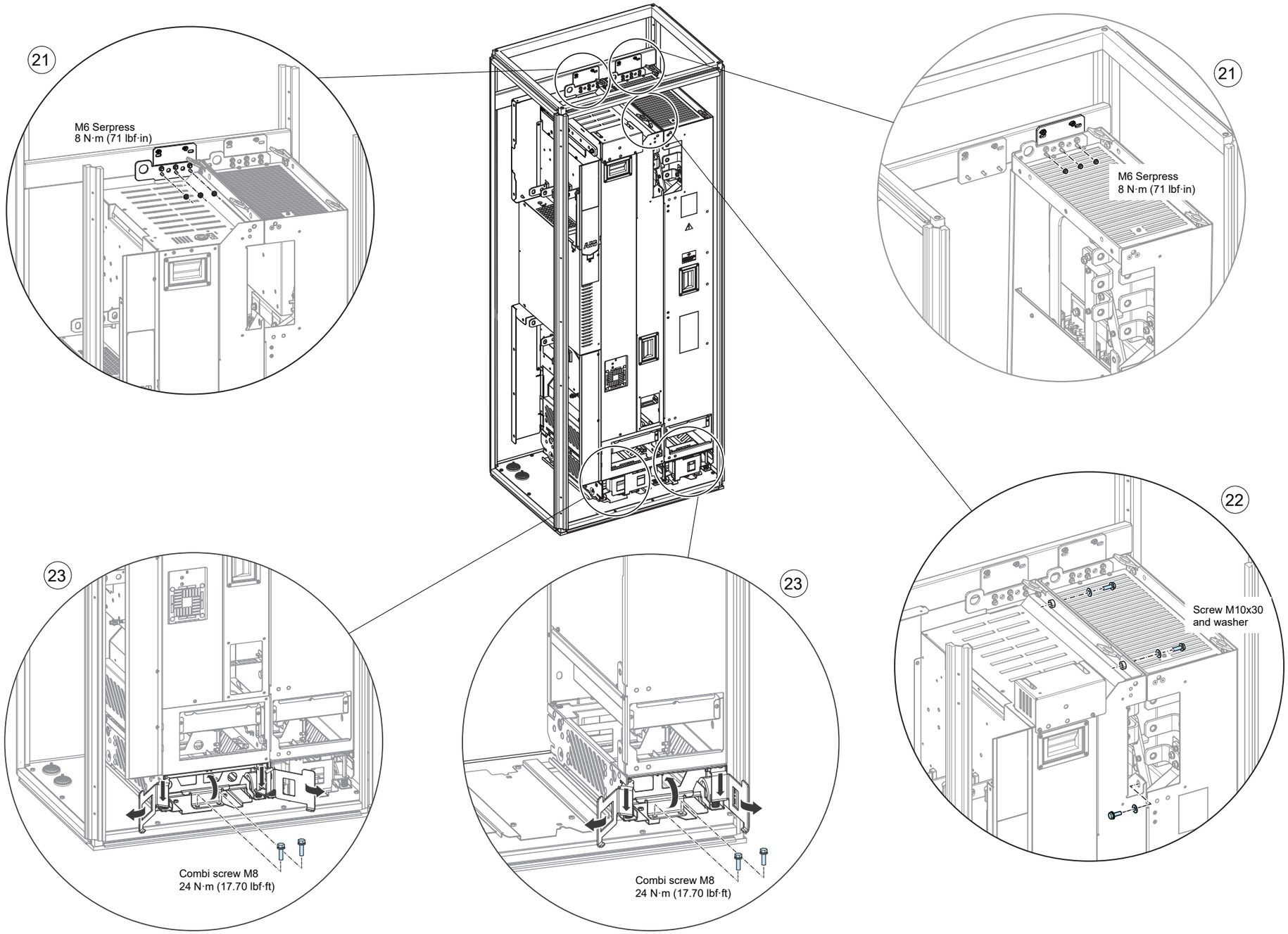

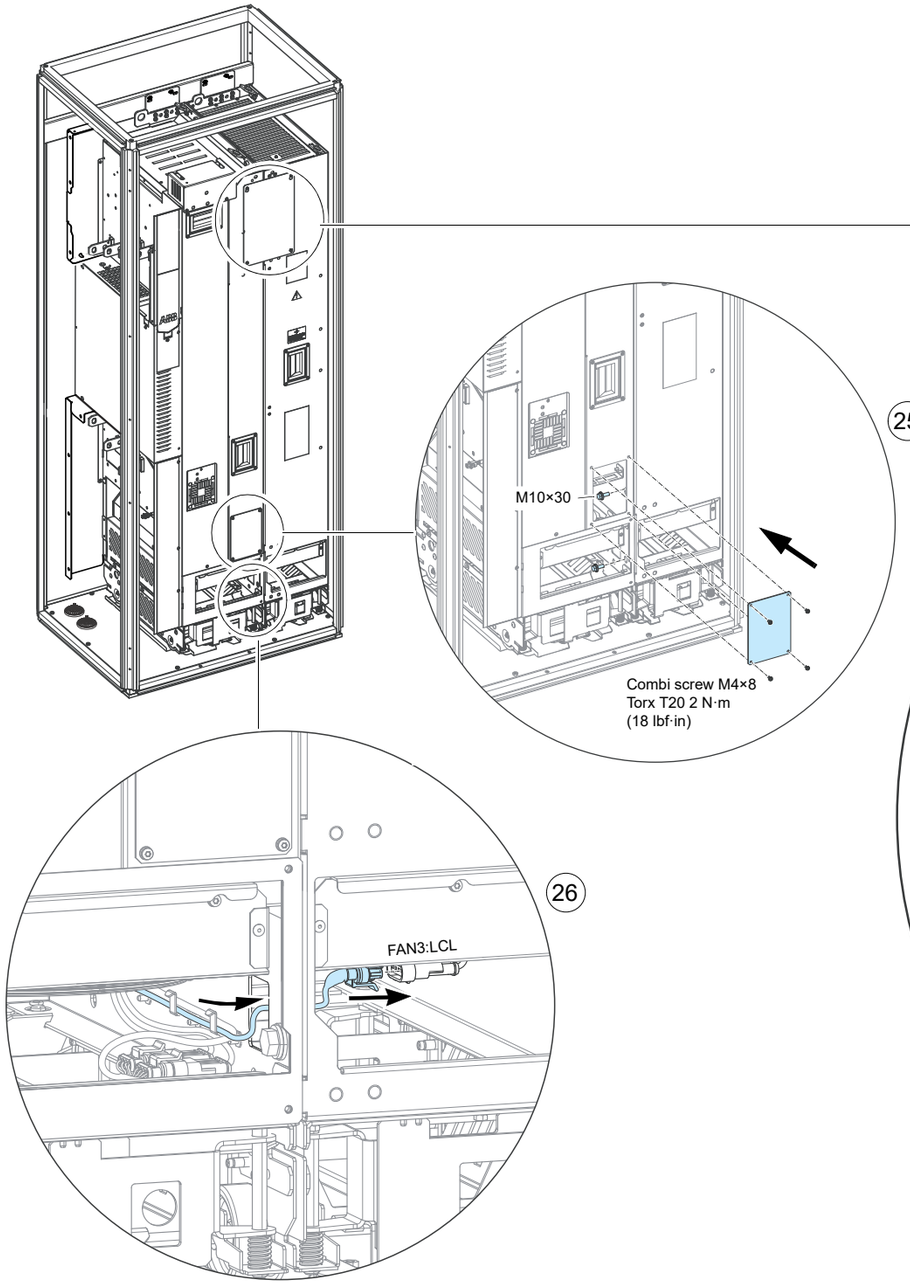
25
M10×30
Combi screw M4×8
Torx T20 2 N·m
(18 lbf·in)
26
FAN3:LCL
24
Combi screw
M12×25 70 N·m (52 lbf·ft)
Combi screw
M4×8 Torx T20
2 N·m (18 lbf·in)

Connecting the motor cables and installing the shrouds

See instructions in section Connecting the motor cables and installing the shrouds (option +B051) (Page 138).

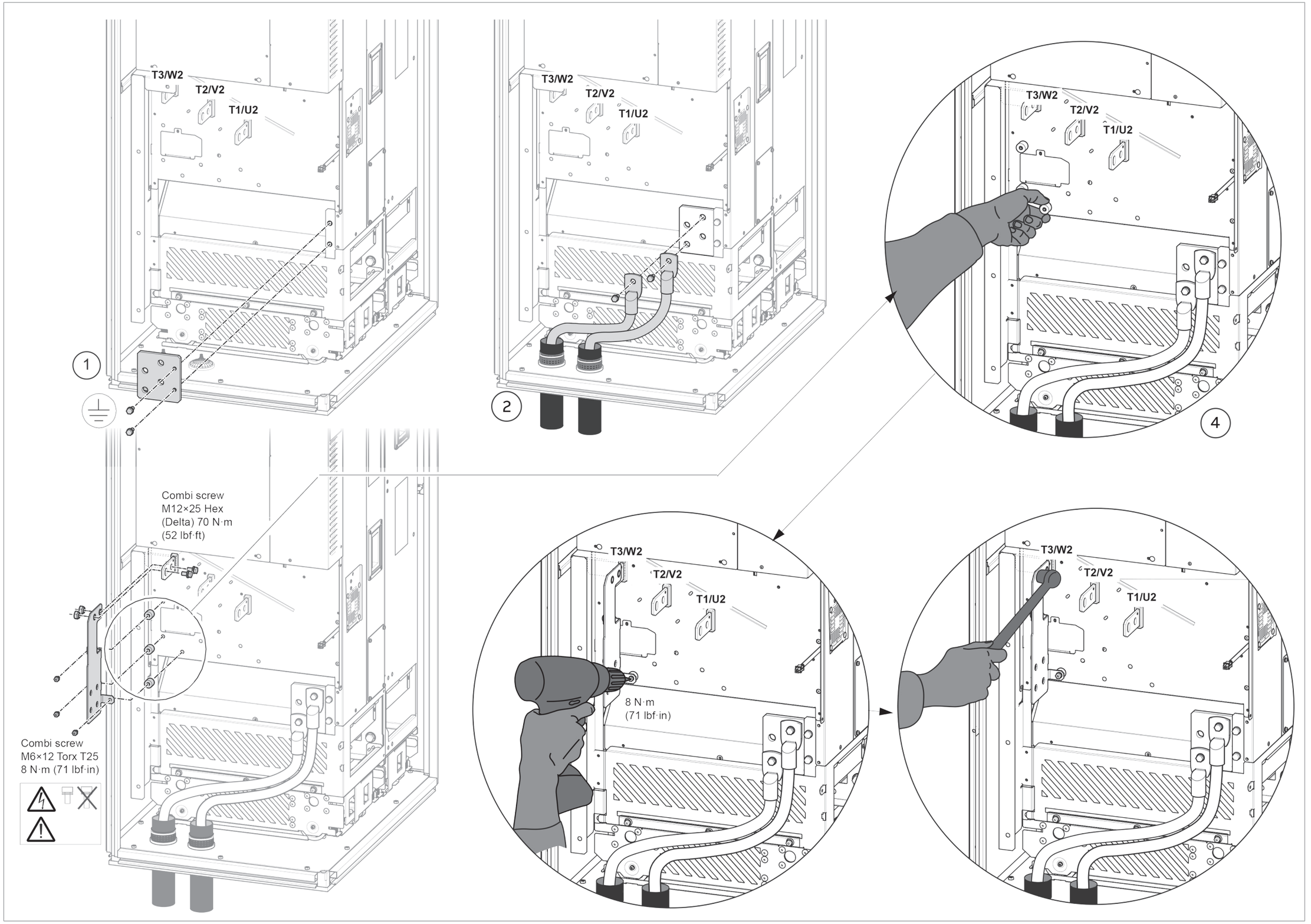

5

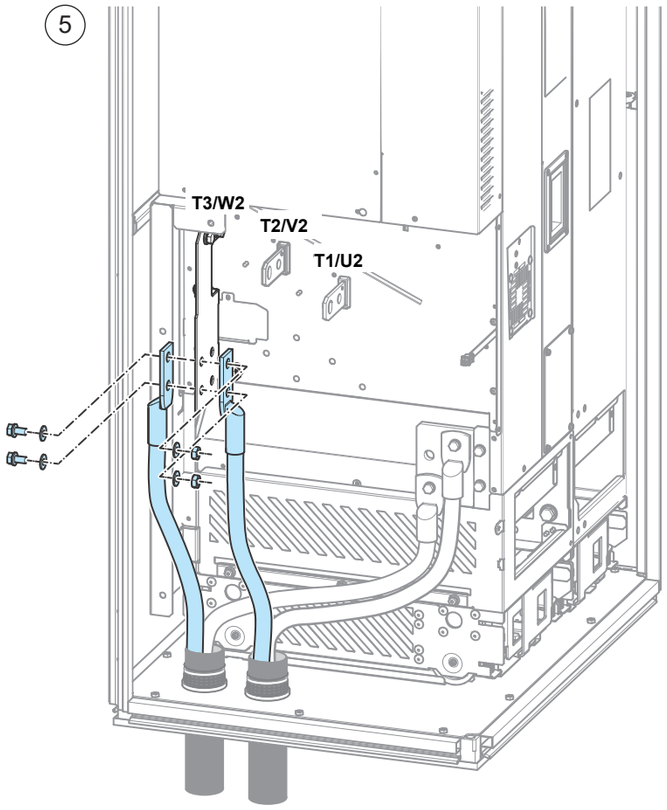

7

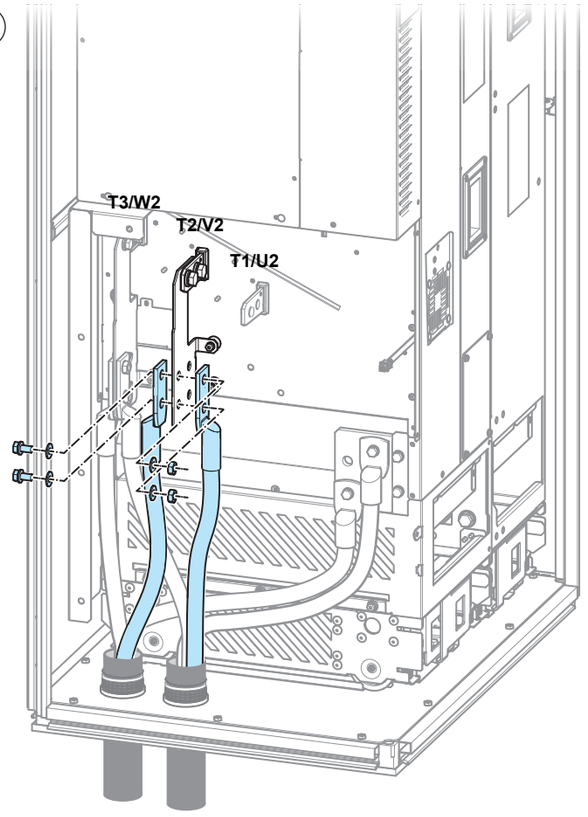

9

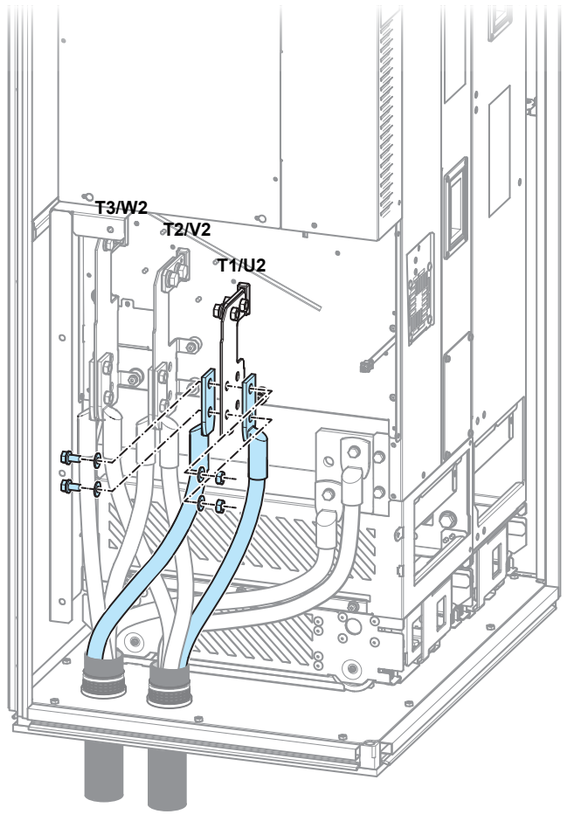

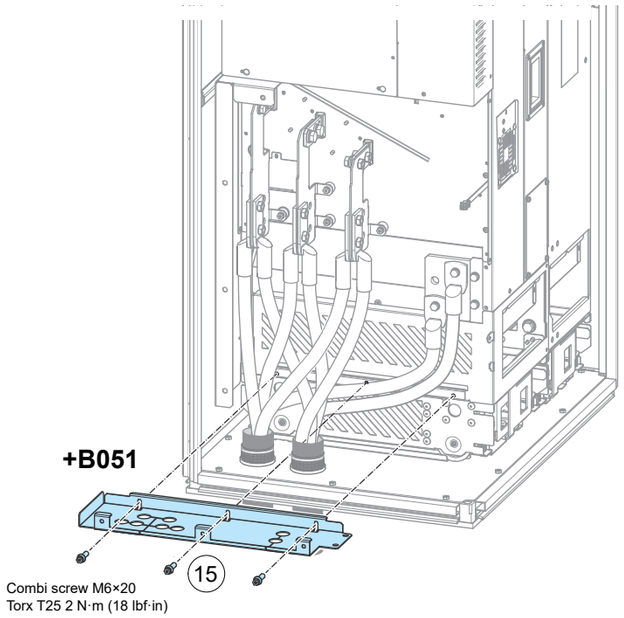
+B051
15
Combi screw M6×20
Torx T25 2 N·m (18 lbf·in)

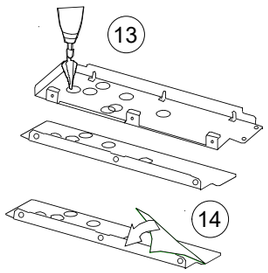
13
14

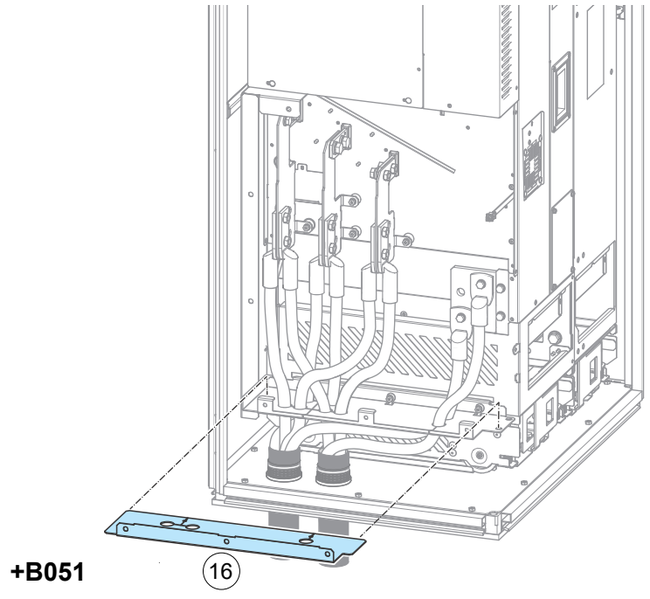
+B051
16

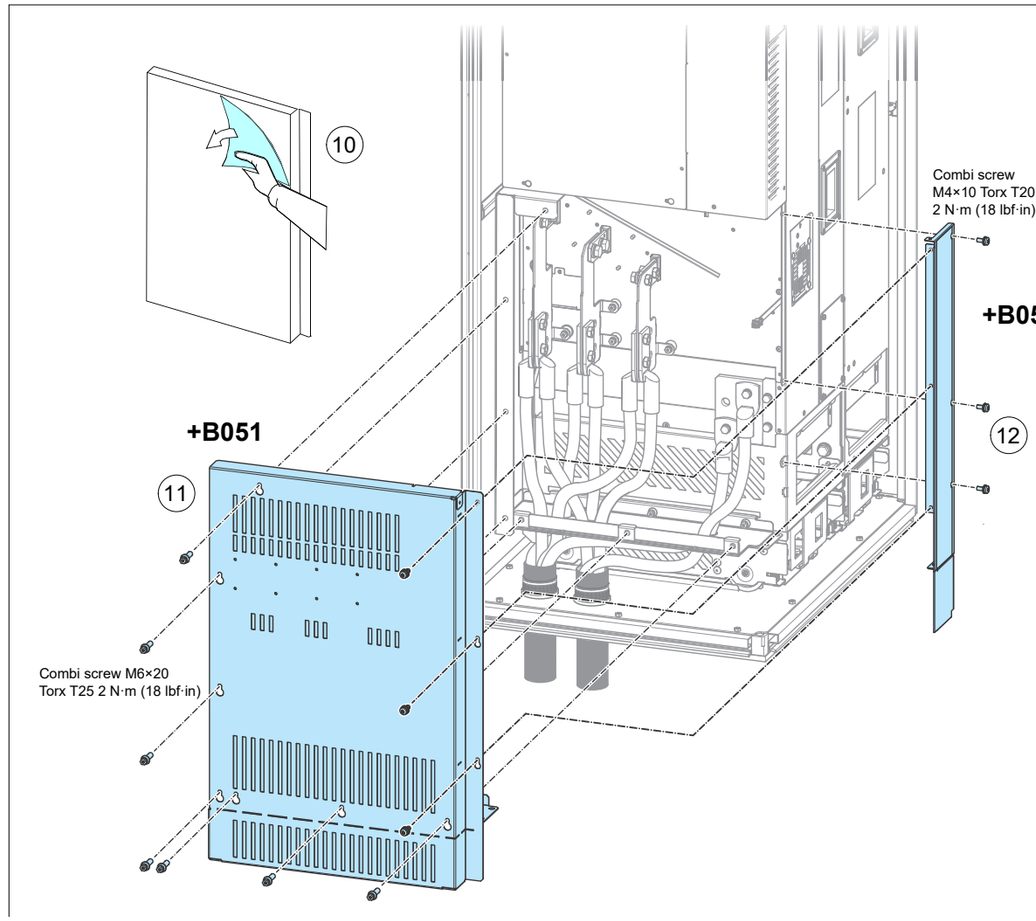
10
Combi screw
M4×10 Torx T20
2 N·m (18 lbf·in)
+B051
12
+B051
11
Combi screw M6×20
Torx T25 2 N·m (18 lbf·in)

Connecting the input power cables and installing the shrouds

See instructions in section Connecting the input cables and installing the shrouds (option +B051) (Page 139)

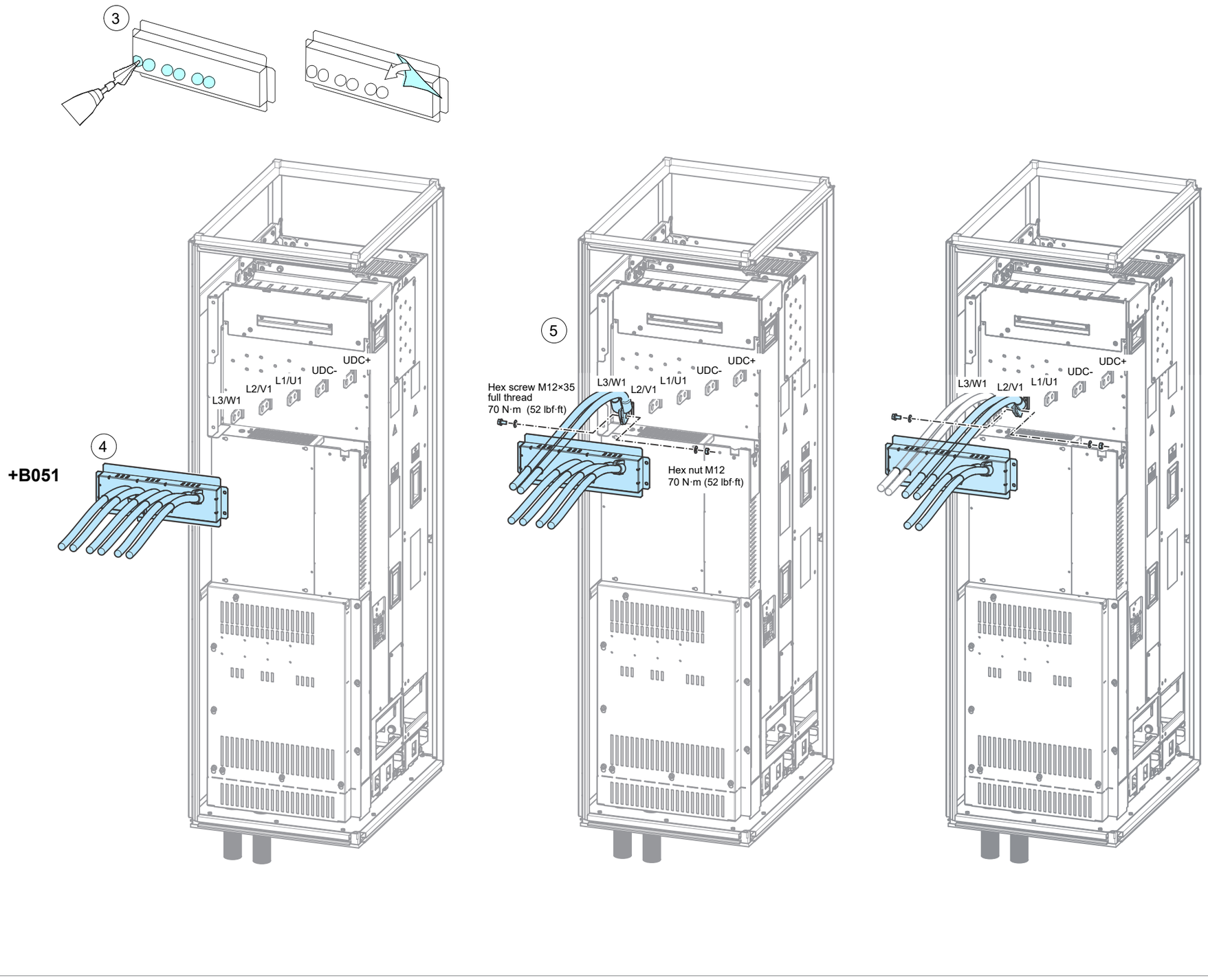

270 Step-by-step drawings for an installation example in Rittal VX25 800 mm wide enclosure

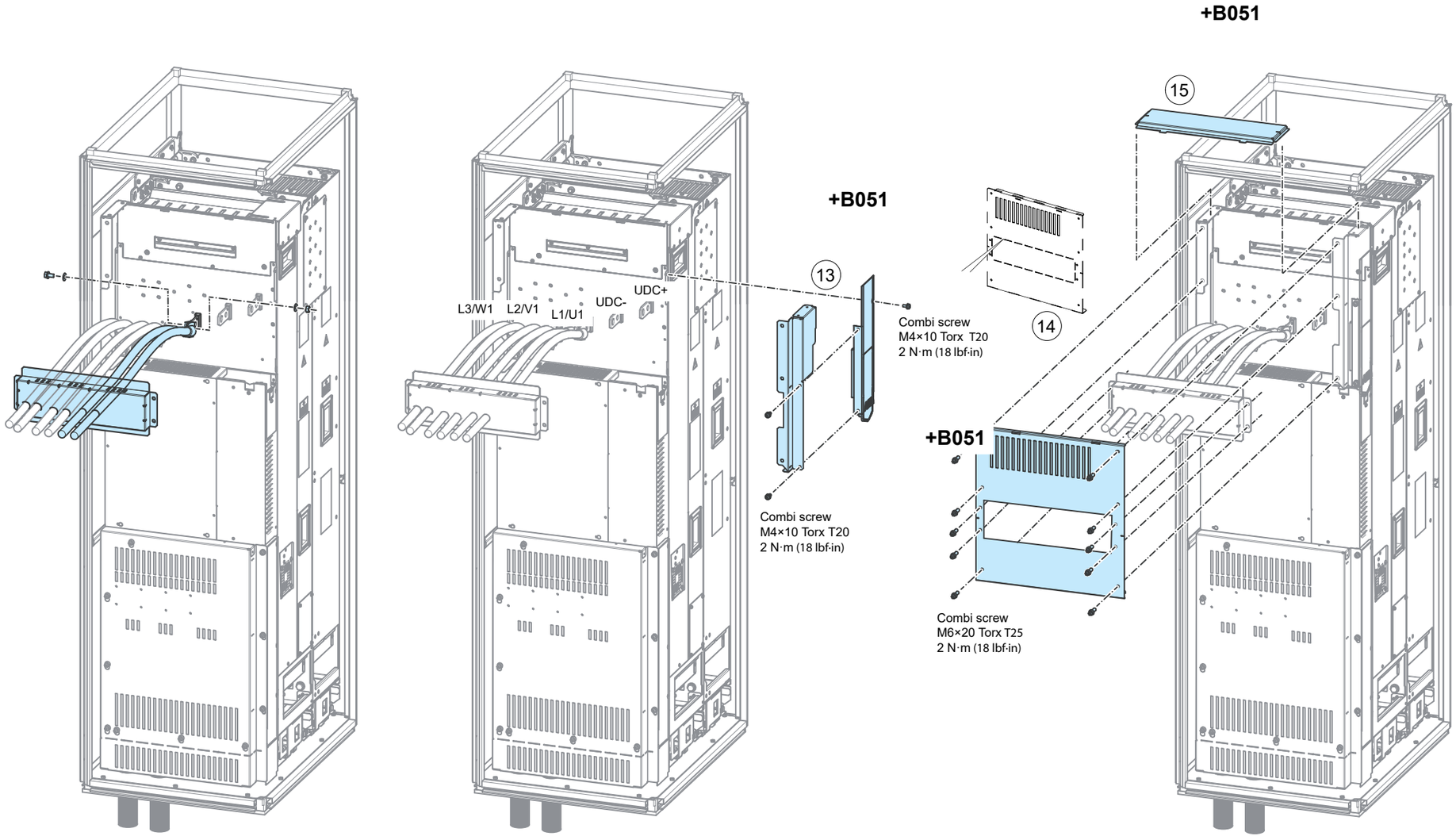

Installing the air baffles and removing the cardboard covers

See instructions in section Air baffles (Page 199)

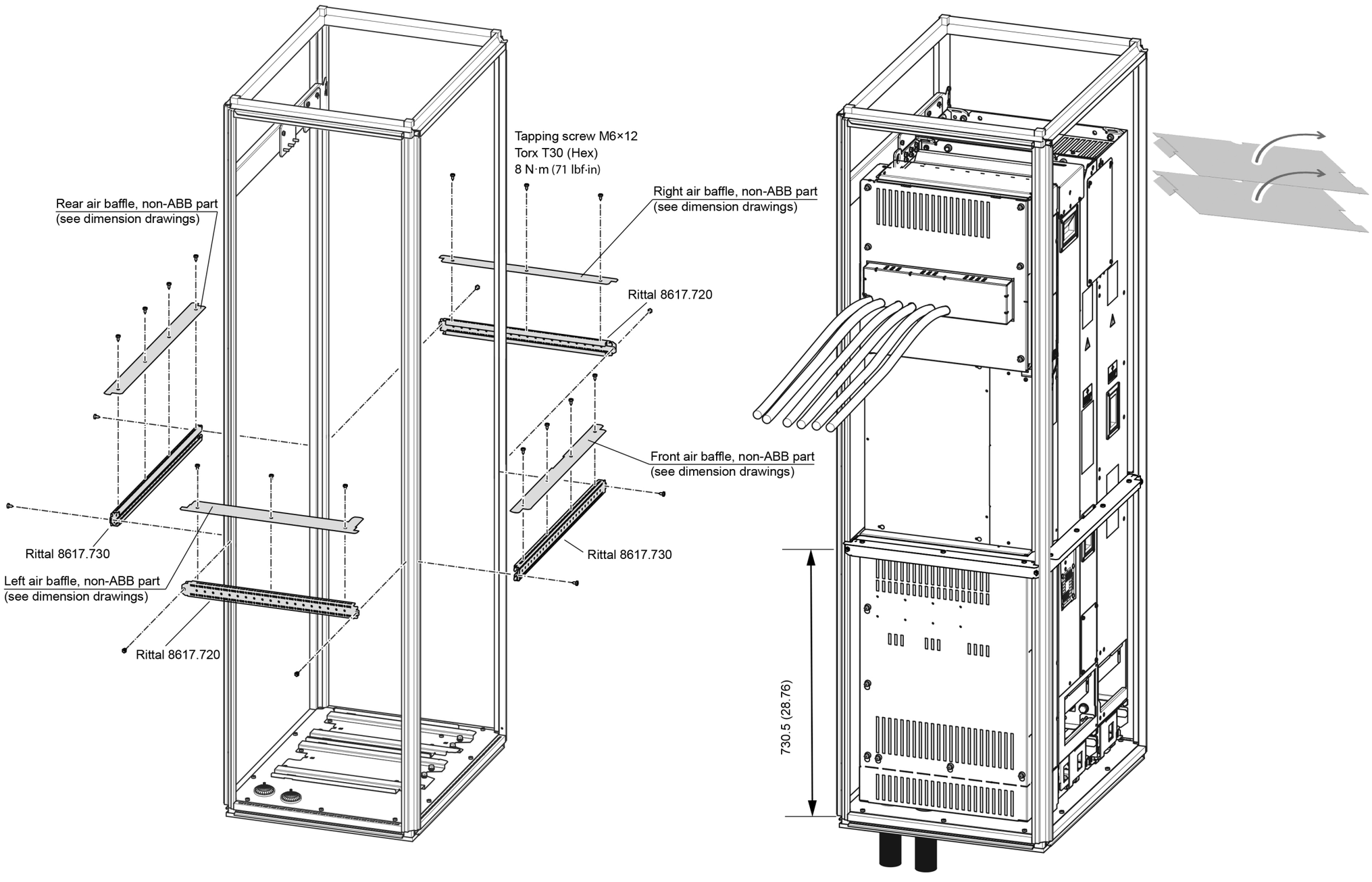

272 Step-by-step drawings for an installation example in Rittal VX25 800 mm wide enclosure

Further information

Product and service inquiries

Address any inquiries about the product to your local ABB representative, quoting the type designation and serial number of the unit in question. A listing of ABB sales, support and service contacts can be found by navigating to www.abb.com/searchchannels.

Product training

For information on ABB product training, navigate to new.abb.com/service/training.

Providing feedback on ABB manuals

Your comments on our manuals are welcome. Navigate to new.abb.com/drives/manuals-feedback-form.

Document library on the Internet

You can find manuals and other product documents in PDF format on the Internet at www.abb.com/drives/documents.

a7 (frozen)
PDF-A4
Created 2023-03-28, 10:43:47

www.abb.com/drives

3AXD50000419708D

© Copyright 2023 ABB. All rights reserved.
Specifications subject to change without notice.

3AXD50000419708 Rev D (EN) 2023-03-28