Doc. N.° 1SDH000999R0735 - B1419

SACE Emax 2

Blocco chiave in inserito/test/estratto speciali (STI, RONIS 1104-B) - E1.2
Key lock on special devices in connected/isolated for test/disconnected positions (STI, RONIS 1104-B) - E1.2
Schlüsselverriegelung in Betriebsstellung/Trennstellung für Prüfung/Außenstellung, Spezial (STI, RONIS 1104-B) - E1.2
Verrouillage par clé en embroché/essai/débroché spéciaux (STI, RONIS 1104-B) - E1.2
Bloqueo llave en posición insertado/prueba/extraído especiales (STI, RONIS 1104-B) - E1.2

E1.2

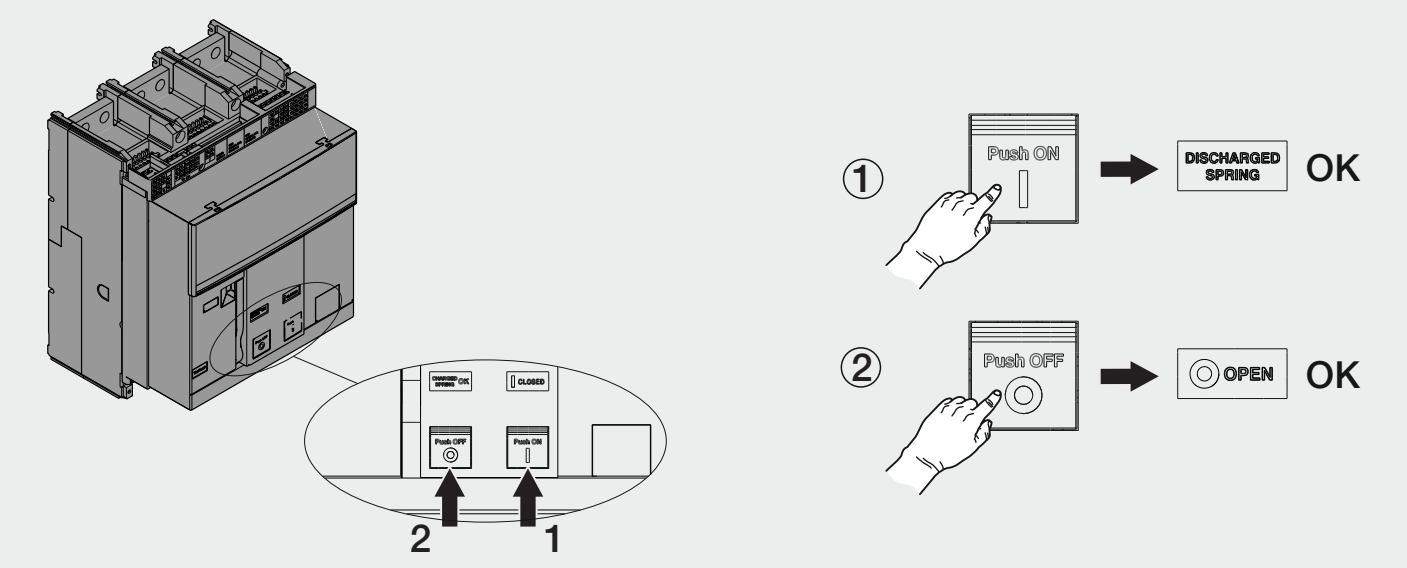

A CURA DEL CLIENTE
AT CUSTOMER'S EXPENSE
ZU LASTEN DES KUNDEN
A LA CHARGE DU CLIENT
A CARGO DEL CLIENTE

STI ABA90DEL5000
STI HBA90DPS5000

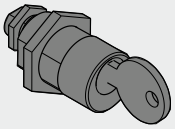

A

RONIS 1104-B

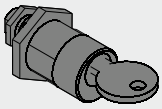

B

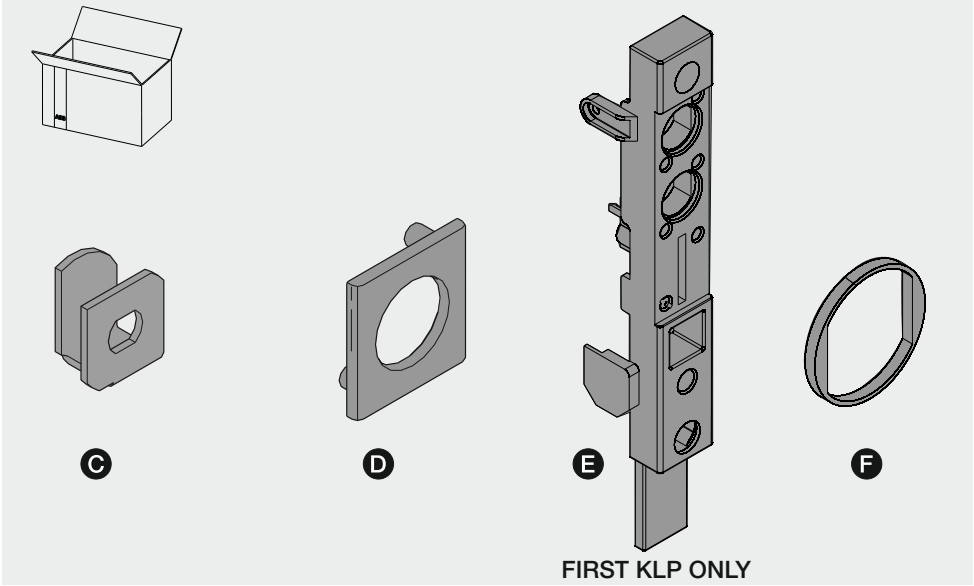

Power and productivity
for a better world™

1

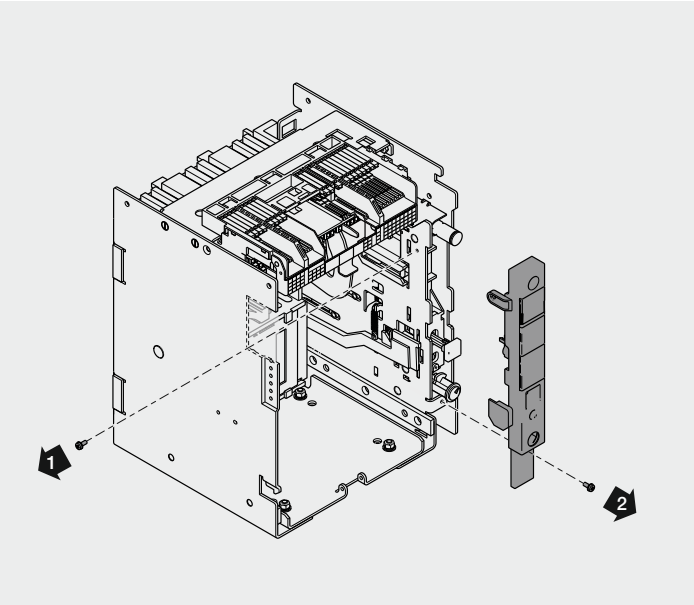
1
2

2

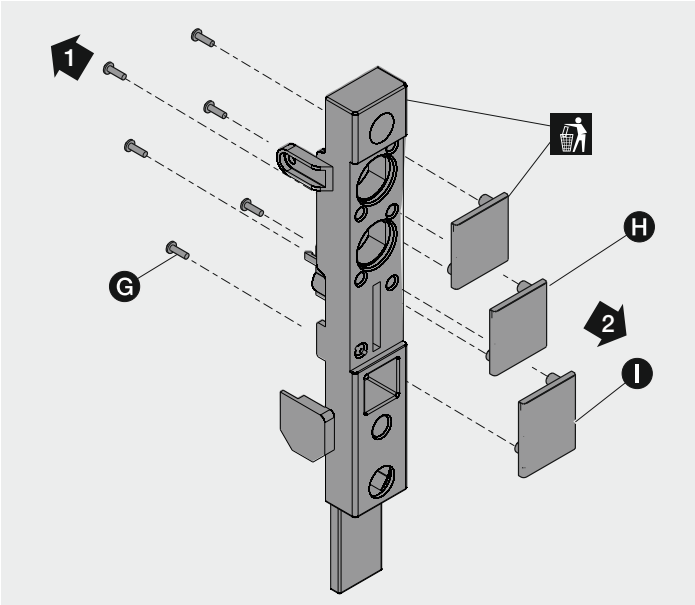
1
G
H
2
I

3

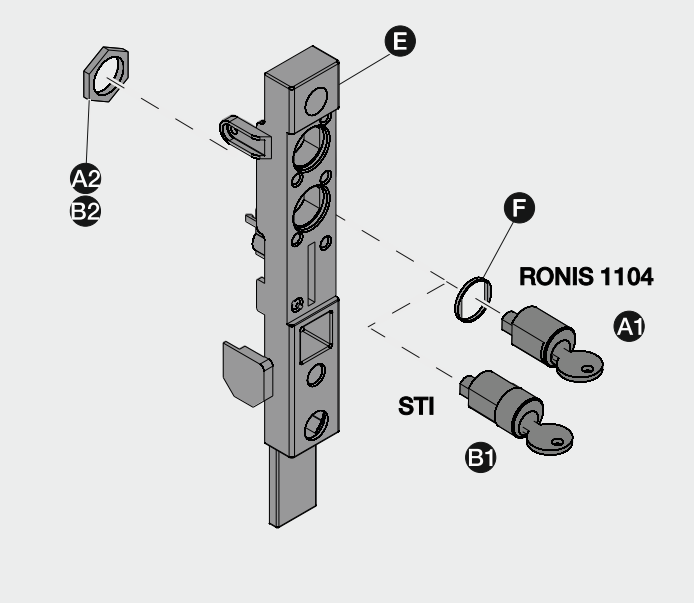
E
A2
B2
F
RONIS 1104
A1
STI
B1

4

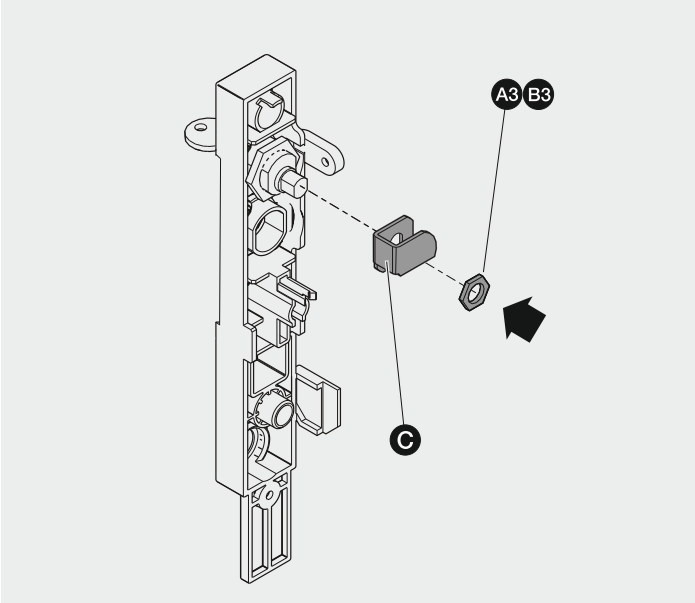
A3
B3
C

5

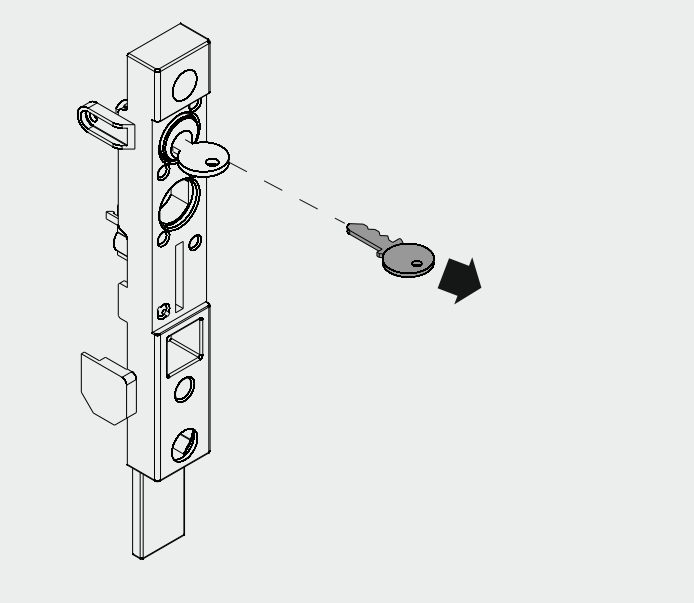

6

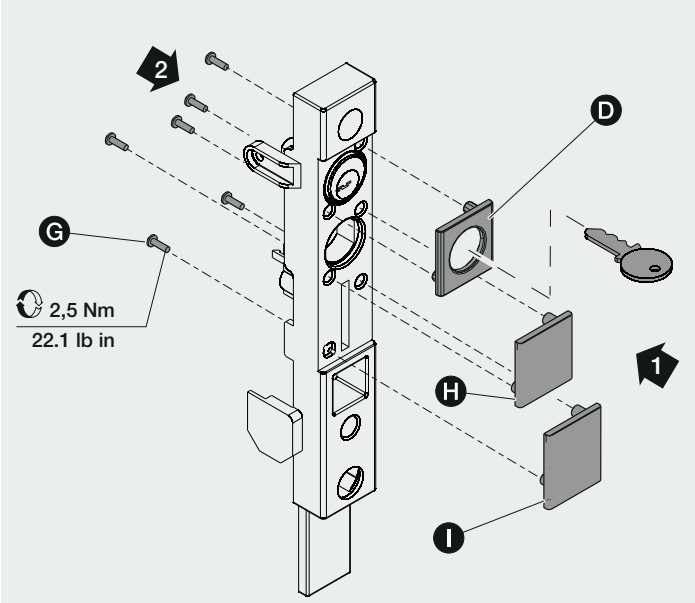
2
D
G
2,5 Nm
22.1 lb in
1
H
I

7

FIRST KLP

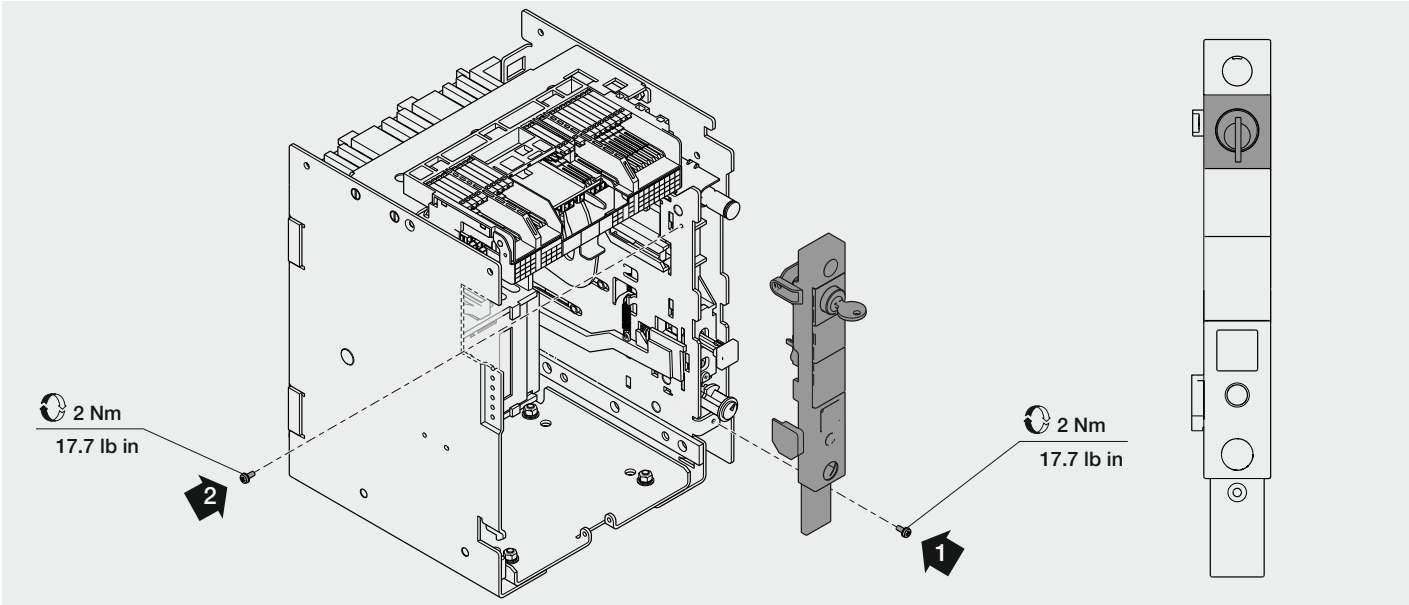

8

SECOND KLP

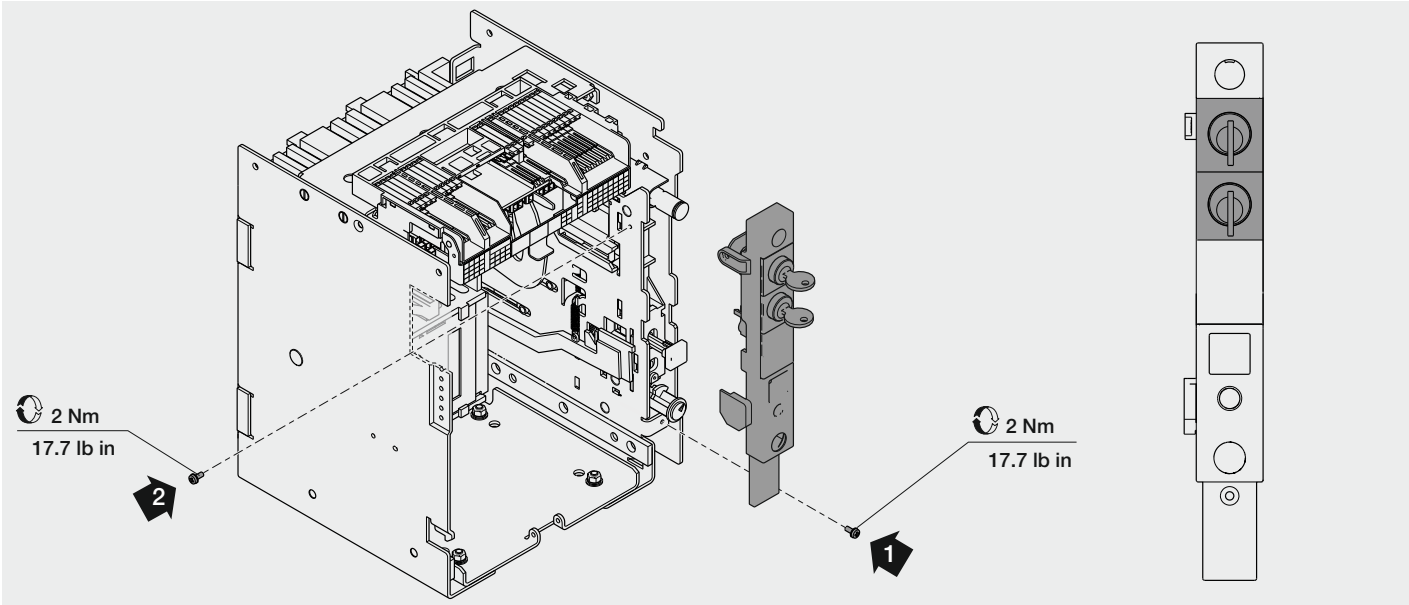

PRIMA DI OPERARE
BEFORE OPERATING
BEVOR MAN ANFÄNGT
AVANT D'INTERVENIR
ANTES DE OPERAR

1 VERIFICARE POSIZIONE CHIAVE - CHECK KEY POSITION - SCHLÜSSELPOSITION PRÜFEN
VÉRIFIER POSITION CLÉ - VERIFICAR POSICIÓN DE LA LLAVE

2 VERIFICARE POSIZIONE SEGNALATORE - CHECK INDICATOR POSITION
ANZEIGE POSITION PRÜFEN - VÉRIFIER POSITION INDICATEUR
VERIFICAR POSICIÓN INDICADOR

3 VERIFICARE POSIZIONE PULSANTE - CHECK BUTTON POSITION
TASTE POSITION PRÜFEN - VÉRIFIER POSITION BOUTON
VERIFICAR POSICIÓN PULSADOR

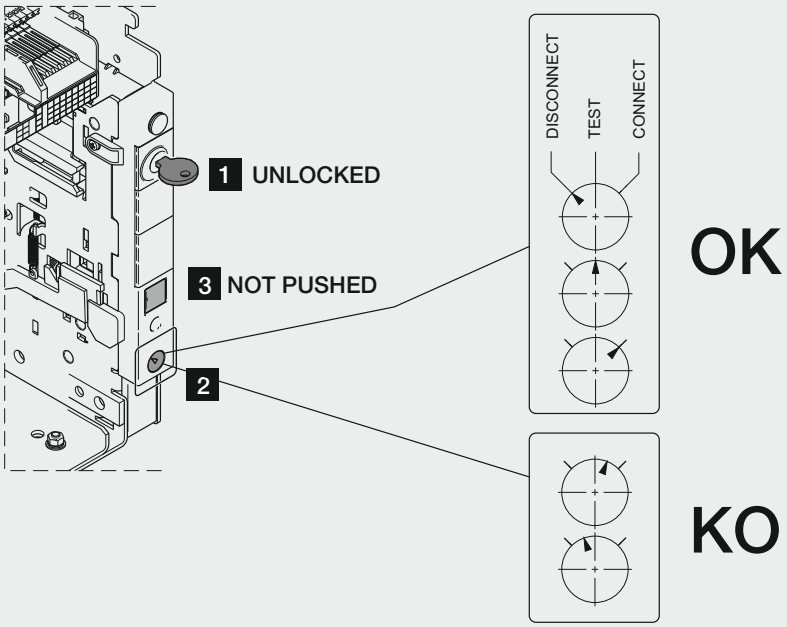

PER AZIONARE BLOCCO
TO OPERATE LOCK
VERRIEGELUNG BETÄTIGEN
POUR FONCTIONNER LE BLOCAGE
PARA OPERAR EL BLOQUEO

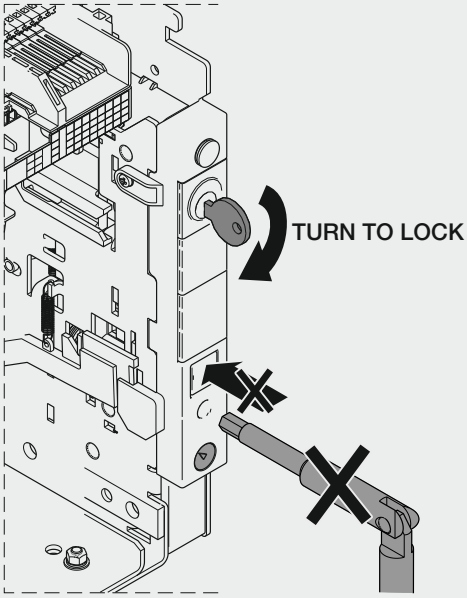

For more information please contact:

ABB S.p.A.
Via Pescaria, 5
24123 Bergamo - Italy
Phone: +39 035 395 111

© Copyright 2017 ABB. All rights reserved.
www.abb.com

Power and productivity
for a better world™