Longitudinal differential protection with blocking relays

Edition 1

By longitudinal differential protection is meant rapid and selective relay protection for feeders and interconnectors based on a direct comparison of the currents at the end points of the cable. Normally these currents are equal, apart from the capacitance of the cable, but, on the other hand, when faults occur on the line a certain differential current corresponding to the current at the location of the fault arises. This current actuates the protective system and brings about tripping. As this protection is used especially for cables it is also termed cable differential protection.

The basic principle of this protection is shown in singlephase in Fig. 1 on Fao 3738. The line section A-B has at each end current transformers 1a and 1b with the same ratio and connected via the pilot wires l_1, l_2 and l_3.

As long as the section A-B is free from faults, the current I_1 and I_2 at its end points are equal. If the current transformers 1a and 1b are also equal to each other, the corresponding secondary current i_1 and i_2 will also be the same. Thus a circulating current will be obtained in the wires l_1 and l_2 while the diagonal wire l_3 will be dead.

On the other hand, in the case of a fault on the section A-B with the current I_f at the fault location a corresponding differential current i_f will be obtained through l_3 and through both the differential relays 2a and 2b, which then function and trip the corresponding circuit breakers in A and B.

Blocking relay

If, however, in the case of a fault outside the line section A-B a short-circuit current sufficiently large to saturate the current transformers flows through A-B, a stage of unbalance will arise between these transformers. In spite of the fact that the primary currents are equal, the secondary currents will be unequal and a considerable differential current will permeate the differential relays. In order to prevent undue tripping of the line A-B which is without faults, a blocking relay is inserted in A and B. It is connected up as shown in Fig. 2.

An ASEA electro-magnetic balanced-beam relay of type RBA 5 is used as a blocking relay (3 in Fig. 2). Its contact (K1-K2), which is connected in series with the contact of the differential relay (2), is normally kept closed by means of a spring. The coil A1-A3-A2, which is excited by the current $i_1 + i_2$, opposes the spring and thus attempts to open the contact (K1-K2). The coil A4-A5, which is excited by the current $i_1 - i_2$, on the other hand, assist the spring and thus works against the previous coil. The design and appearance of the blocking relay can be seen from Figs. 5-7 on Fao 3740.

In the case of short-circuiting outside A-B, the currents i_1 and i_2 in the coil A1-A3-A2 co-operate, while A4-A5 is only energized by their difference. As soon as i_1 and i_2 exceed a certain value which can be set by means of the spring for 1.2 - 2.4 x

the normal current, the coil A1-A3-A2 predominates and opens the contact so that the protection is blocked. Thus, this prevents undesired tripping even though the current transformers 1a and 1b should be saturated and a considerable differential current $i_1 - i_2$ should arise.

On the other hand, in the case of fault within A-B, i_1 and i_2 oppose each other in the coil A1-A3-A2 while they co-operate in A4-A5, so that the latter predominates and keeps the contact closed. The differential relays can then trip the circuit-breakers at both ends of the section.

The operational range of the blocking relay can be seen from Fig. 3 on Fac 3739. The blocking relay only functions and blocks the differential protection if the currents i_1 and i_2 have values lying within the shaded area (the blocking area).

The current transformers

Undesired tripping in the case of short-circuits outside the differential protection is prevented thanks to the blocking relay, even though the current transformers may be saturated. However, they should have an over-current figure, which at the actual secondary burden must correspond to at least half the greatest short-circuit current which may flow in the protected cable in the case of external faults. With the normal design (diagram 7434 014) it must for each current transformer be calculated with a secondary burden of (5 + 0.1 r) VA at rated current, where r = the resistance per pilot wire (single length). In addition to this, any other possible relay and instrument load should be taken into consideration.

Connection diagram

Connection diagram 7434 014 shows the normal connection for two-phase cable differential protection.

If it was intended to incorporate differential protection for each of two phases, for example R and T, for this purpose a total of 6 pilot wires would be required between A and B. In order to save pilot wires use is made, instead, of a common differential protection for both the phases, which is based on a comparison between the current I_R-I_T in A and B respectively.

The current I_R-I_T is obtained by means of an intermediate current transformer 3 with two cross-connected primary windings and one secondary winding, normally for a rated current of 0.2 A.

The blocking relay 4 and the differential relay 5a are connected up in accordance with the above.

When, in the case of faults on the line A-B, the differential relay closes its contact and the blocking relay's contact remains closed, the time-lag relay 5c is connected and, after a short delay, the auxiliary relay 5d is also connected, whereupon the circuit-breaker 1 is tripped. An indicating device 5e shows that tripping was caused by the differential protection.

In the case of certain faults in the pilot wires (especially in the case of a break in l_1 or l_2) a differential current corresponding to the load current will flow through the differential relay coil. In order to prevent undue tripping, the differential relay should be set for a current higher than which corresponds to the maximum load current. In addition, at least at one station one extra differen-

tial relay 5b should be installed with a considerably lower setting and with the object of signalling in the case of pilot wire faults. The signal should be of time-lage type and coordinated with the other signalling and indicating systems of the station.

The differential relays 5a and 5b of type RRMJ 3, the auxiliary relays 5c and 5d as well as the indicating gear 5e, are of plug-in type and are mounted in a relay case RHGA 8.

A non-linear resistor 8 is connected to each intermediate transformer to prevent the occurrence of an impermissible voltage between the pilot wires in the case of a break in the latter or of large short-circuit currents.

In the two-phase design described above, the protection functions in the case of two-phase and three-phase short-circuits and, in addition, in the case of double earth faults, if the one earth fault is situated in one of the phases R and T connected to the protective device. In the case of double earth faults, in order to obtain certain tripping of at least one of the two earth faults, all the differential protective devices, just as all the other two-phase short-circuit devices in the same network, should all be inserted in the same phases.

For networks with direct or low resistance earthed neutral point, this protection can also be arranged in three phases. It then functions both in the case of phase short-circuits and in all types of earth faults, provided that the earth leakage current is sufficient. An intermediate current transformer is then used with a secondary winding and three primary windings, which are connected to three current transformers as shown in Fig. 4. The primary winding P5-P6, which is connected to the secondary neutral of the current transformers, is normally designed with twice as many turns as both the other primary windings. Otherwise, the protective device is connected up as above.

For short cables it may be sufficient to arrange protective relays at the one station only and from there with extra pilot wires and an auxiliary relay in the other station trip the breaker there. Two extra pilot wires are required to transfer the tripping impulse. If the minus pole from the operating voltage has already been connected between the stations for other purposes, one extra pilot wire only is then sufficient.

J.b.

ASEA	Längsdifferentialskydd med spärrelåer	Foo 3738
Foo 19.8.54	Rit. Fo Kontr. Lf Nd	

Cable Differential Protection with Blocking Relays

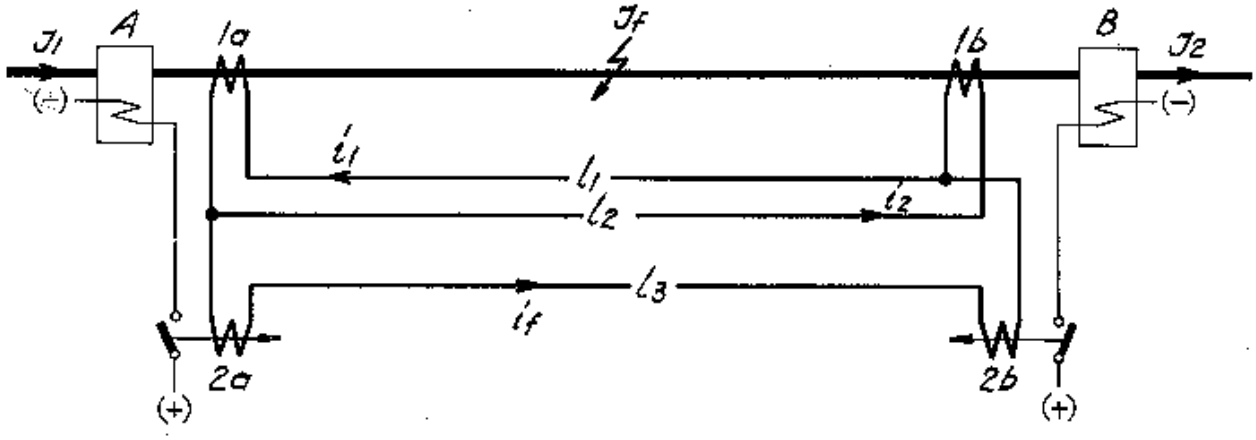

Fig. 1

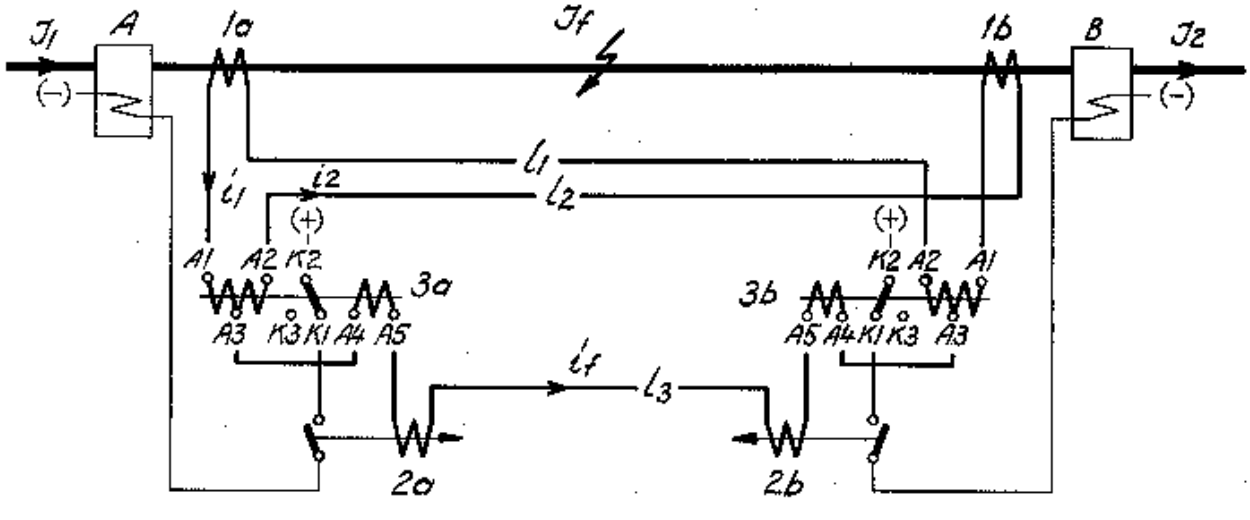

Fig. 2

Nr	Ändringar	Införd

J.W.

ASEA	Längsdifferentialskydd med spärrelöer	Fao 3739
Fao 19.8.54	Rit. Ro Kontr. Kpf Nd	

Cable Differential Protection with Blocking Relays

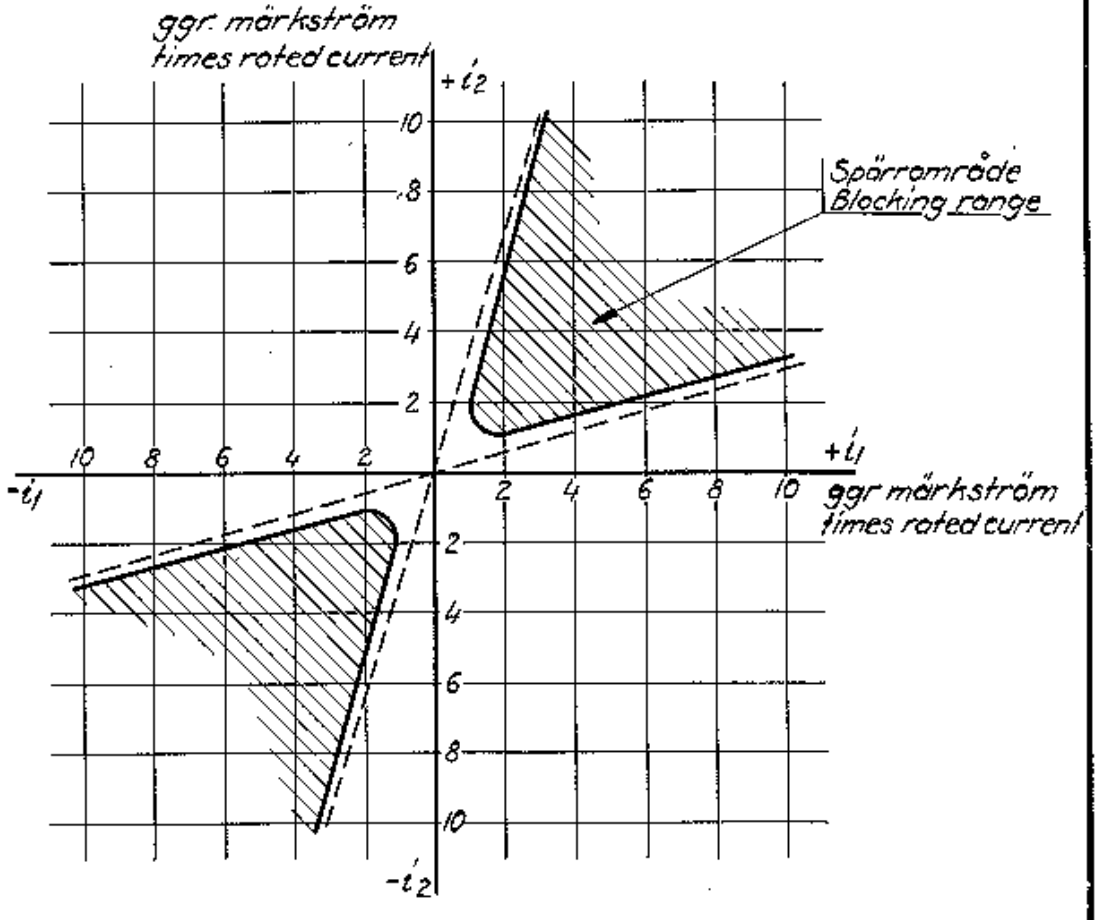

Fig. 3

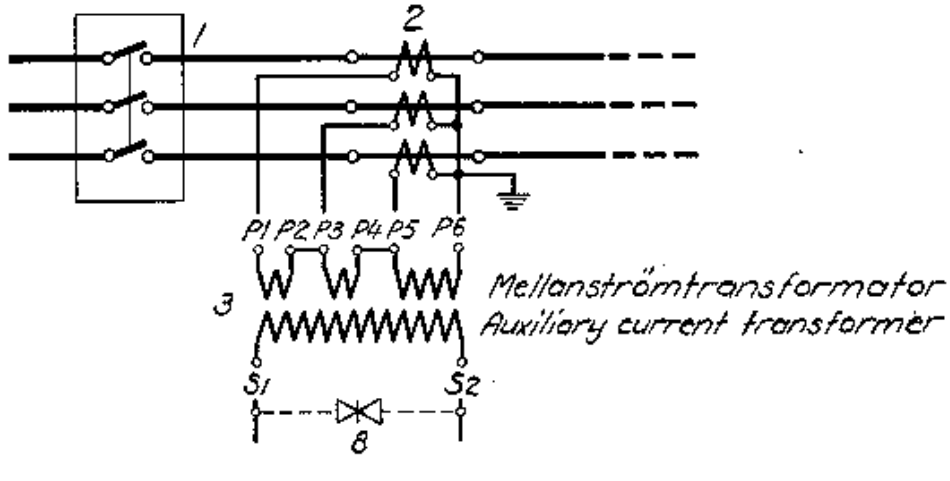

Fig. 4

Not	Ändringar	Införd

ASEA	Spärrelä typ RBA5 Blocking relay type RBA5	Fao 3740
Fao 18.8.54	Rit. Kontr. Normgr.	

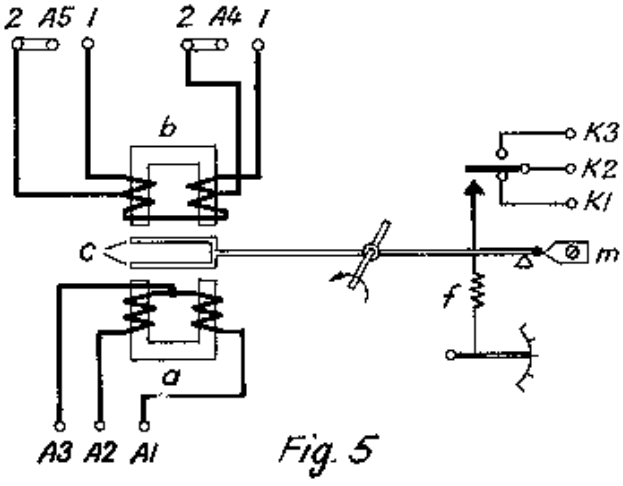

Fig. 5

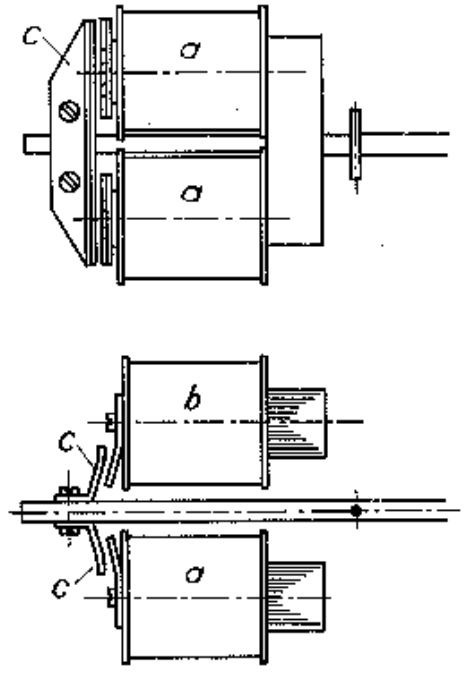

Fig. 6

Koppling Connection	Spärrgräns Blocking limit	1)
2 A5 1 2 A4 1	0,45	ca 45 %
2 A6 1 2 A4 1	0,39	ca 52 %
2 A5 1 2 A4 1	0,33	ca 60 %

1) Spärrområde i procent av kvadranten
Blocking range, percentage of the quadrant

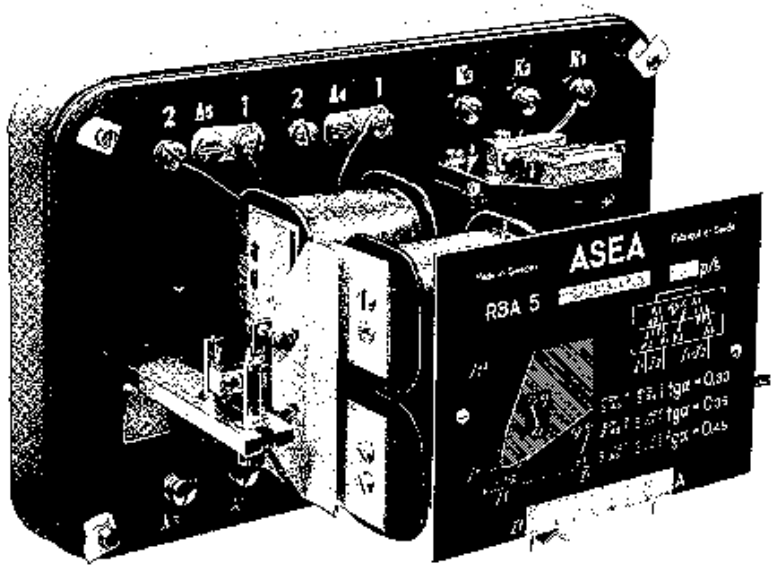

(48041)

Fig. 7
Spärrelä typ RBA5 utan kåpa
Blocking relay type RBA5 without cover

ASEA	Längsdifferentialskydd för kabel	7434 014
	Differential Protection for Cable	
Fao 30.12.47	Rit. Kontr. Normgr.	

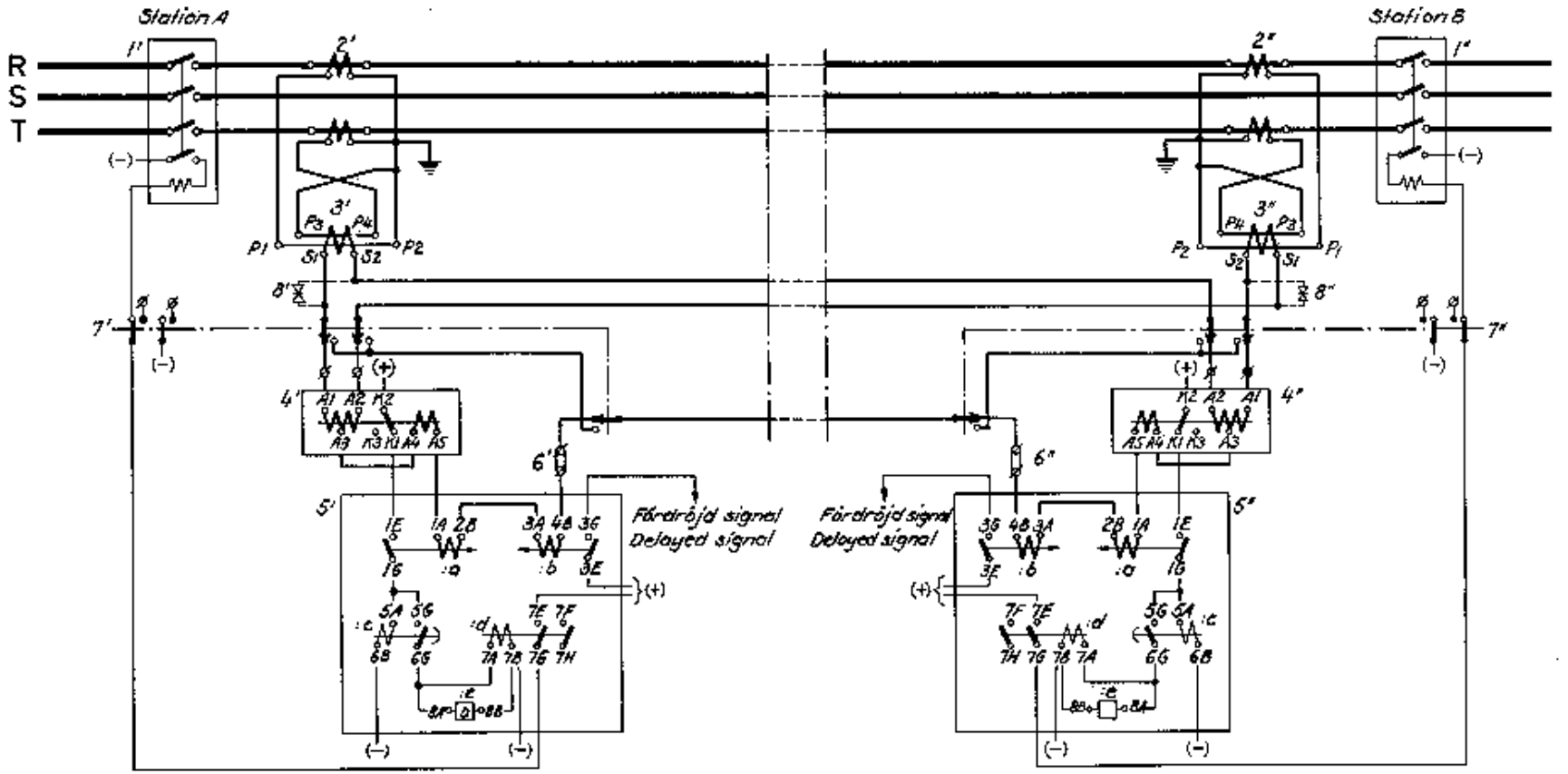

Skyddsmotstånd	8	Protective resistor
Reläprovningsomkoppl. typ OBA 61	7	Relay test switch type OBA 61
Kopplingsbleck	6	Connection strip
Relécentral typ RHGA8 med:	5	Relay station type RHGA8 with:
a Differentialrelä typ RRMJ3		a Differential relay type RRMJ3
b Differentialrelä typ RRMJ3		b Differential relay type RRMJ3
c Tidrelä typ RRK21		c Time relay type RRK21
d Hjälprelä typ RRM25		d Auxiliary relay type RRM25
e Indikeringsdon typ RRSC		e Indicating device type RRSC
Spärrelä typ RBA5	4	Blocking relay type RBA5
Mellanströmtransformator	3	Auxiliary current transformer
Strömtransformatorer	2	Current transformers
Automatisk brytare	1	Automatic circuit breaker
Benämning	No	Item

b) Omrit. 19.8.54
c) Prevbill. Ink 16.3.56

7434 014