SVCs for load balancing and trackside voltage control High-Speed 1

A total of seven ABB Static Var Compensators (SVC) have been supplied to High-Speed 1 (HS 1), a 108 km high-speed rail line between London and the Channel tunnel at Dover which was formerly known as the Channel tunnel rail link (CTRL). With this link in operation, it is possible to travel between London and Paris in just over two hours at a maximum speed of 300 km/h.

Similarly, the link reduces travel time between London and Brussels to about two hours.

The railway system is designed for frequent operating of high speed trains but also for slower freight and commuter traffic. Modern trains may have power ratings in the range of 10 MW, thus the power feeding system must be designed for large fluctuating loads. The traction feeding system is a modern direct supply of 50 Hz, 2x25 kV voltage. An auto transformer scheme is used, giving a low voltage drop along the traction lines. Direct transformation from the power grid via transformers connected between two phases is used.

Each one of three traction feeding points between London and the Channel Tunnel is supported by Static Var Compensators. Six of these SVCs are mainly for voltage support and the seventh is for load balancing.

Dynamic voltage support

The SVCs for dynamic power factor control (Barking, Singlewell) are connected on the traction side of the power transformers. The supergrid transformers for the traction supply are earthed in the middle of their low voltage winding. This results in two voltages, 180 degrees apart, seen from the winding terminals to earth. The SVCs are connected across these windings in such a way that there are two identical SVCs connected feeder-to-earth and catenary-to-earth. Each SVC is rated at 25 kV, -5/+40 Mvar. These SVCs are single-phase assemblies.

The SVCs have three main purposes:

- Voltage support in case of loss of one feeder station
- Steady state power factor control
- Steady state harmonic mitigation.

The prime reason for the SVCs is to maintain the power factor at unity, as seen from the supergrid transformers during normal operation. This ensures that a low tariff for the active power can be used. Secondly, the SVCs are installed to mitigate harmonic pollution. The SVC filters are designed not only to mitigate the SVC generation of harmonics but also harmonic generation from the traction loads. There are stringent requirements on the permitted contribution from the traction system to the harmonic level at the connection points to the supergrid. Thirdly the SVCs are intended to support the railway voltage in case of a feeder station trip. In such a case two sections have to be fed from one station. It is then essential to keep up the voltage in order to maintain traction efficiency.

The SVCs operate on a closed loop power factor control. At outages of feeder stations, they will automatically change to closed loop voltage control.

Dynamic load balancer

The Cross Channel HVDC is located close to one of the feeding stations. The railway system is not allowed to contribute to the imbalance of the system voltage at this point. In order to fulfill this requirement, a load balancer was installed at Sellindge, rated at 33 kV, -80/+170 Mvar.

The traction load of up to 140 MVA (cos phi 0.8-0.9 lagging) is connected between two phases. Without compensation, this load would give about 2% negative phase sequence voltage. In order to counteract the unbalanced load, a load balancer (an asymmetrically controlled SVC) was installed. The load balancer transfers active power between the phases in order to create a balanced load as seen from the supergrid.

The load balancer at the Sellindge main circuit is optimised to handle a load connected between the C and A phases. Based on the general theory of load balancing, it is then necessary to have a reactor connected between the A and B phases and a capacitor between the B and C phases in order to balance a purely active load. The traction load also has a reactive part which has to be balanced. In this plant not only the asymmetry is compensated but also the power factor is kept at unity. This is compensated, by adding a capacitor between the C and A phases.

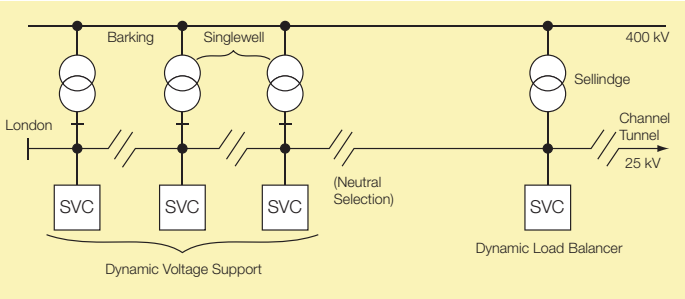

High-Speed 1: feeding points along the route, with SVCs

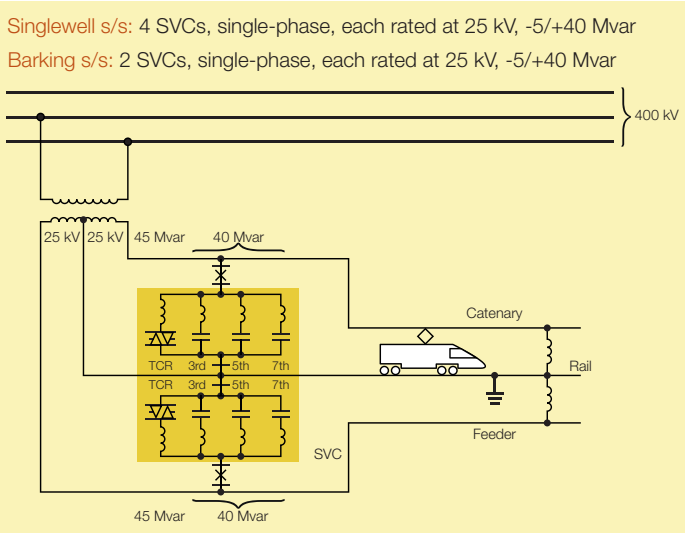

Single-line diagram, Barking and Singlewell

The load balancer is controlled to compensate the negative phase sequence component in the current drawn from the supergrid, after which the power factor is regulated to unity. In case there is capacity available (depending on the load balancer´s working point), the positive sequence voltage is also controlled.

High availability

A high value for the availability of the plant is required. Consequently, the concept of redundancy is consistently used. The control system is fully duplicated. In the main circuit, a complete fourth redundant phase has been added. All phases had to be made as independent of one another as possible.

A rather unique plant layout, as well as the design of the control and protection functions, have resulted from these requirements. There are four fully independent “inter-phases” (an assembly of components connected between two phases). Each inter-phase includes an independent set of filters, reactors, thyristor valves, thyristor firing logics, measuring transformers, relay protection and a cooling system. They are

each connected to a substation busbar by means of circuit breakers and disconnectors. Filters can be connected to or disconnected from the fourth interphase to turn it into either an inductive or a capacitive branch.

There are two independent control systems working on a three-phase base, while the thyristor firing system and logics are directly related to each inter-phase. There is strict segregation between the control systems and between the inter-phases in the valve firing logic and the overall protection system. In case of a failure in one inter-phase, the control system will trip and automatically substitute it with the stand-by unit.

Thyristor valves

The thyristor valves utilise a bi-directional device, i.e. there are two antiparallel thyristors on a common silicon wafer. Using these thyristors, the number of units needed in each valve is halved. The thyristor is a 5” device with a current handling capability of about 2000 A (rms).

Control system

The control system, MACH 2, is based on common PC technology but adapted to meet the special requirements for use in an electric power substation environment. All communication with the SVC is via a terminal screen. A traditional mimic panel is also provided in the building for redundancy. Operation and supervision of the system is normally taken care of from a remote control room with which the control system communicates.

The main objective of the control system is to convert the single-phase traction load into a symmetrical three-phase load. It is also designed to keep the 33 kV bus voltage close to a voltage set point. The voltage control system used is a closed loop system.

The automatic control can be switched off and the load balancer operated manually. The control variable is compared with a set reference value. The network characteristics will determine the operating point of the load balancer.

As a consequence of placing all functionality in computers and micro-controllers, the software plays a very important role in the design of the system. By using a fully graphical, functional block programming language and a graphic debugging tool, running on standard computers, it is possible to establish an efficient development and test environment to produce high quality programs and documentation.

Technical data

Location	Barking	Singlewell	Sellindge
No of SVCs	2	4	1
SVC purpose	Dynamic voltage support		Dynamic load balancing
Rated voltage	25 kV/1-phase		33 kV/3-phase
Rated power, per each SVC	-5/+40 Mvar		-80/+170 Mvar

Dynamic load balancing	
Voltage unbalance at the 400 kV Point of Common Coupling:	
Uncompensated	2%
With SVC	0.1%

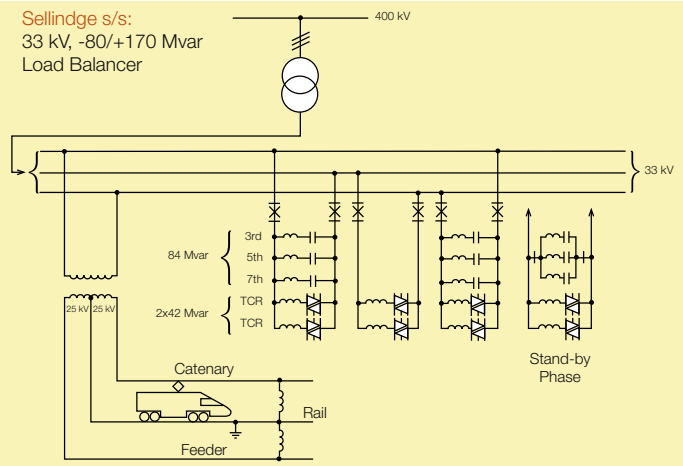

Dynamic load balancer: principal configuration

Dynamic load balancer at Sellindge

SVC at Singlewell

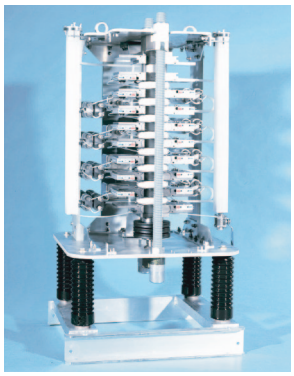

BCT valve

For more information please contact:

ABB AB
FACTS
SE-721 64 Västerås,
SWEDEN
Phone: +46 (0)21 32 50 00
Fax: +46 (0)21 32 48 10

www.abb.com/FACTS

A02-0196 E, 2010-11, Elanders Sverige AB

Power and productivity
for a better world™