Relion® 670 series

Bay control REC670 Customized Product Guide

Power and productivity
for a better world™

Contents

1. Application

REC670 is used for the control, protection and monitoring of different types of bays in power networks. The IED is especially suitable for applications in control systems with distributed control IEDs in all bays with high demands on reliability. The IED can be used up to the highest voltage levels. It is suitable for the control of all apparatuses in any type of switchgear arrangements.

The control is performed from remote (SCADA/Station) through the communication bus or from local HMI. Different control configurations can be used, and one control IED can be used per bay or one IED can be common for several bays. Interlocking modules are available for all common types of switchgear arrangements. The control is based on the select before execute principle to give highest possible security. A synchronism control function is available to interlock breaker closing. Synchronizing function where breaker closes at the right instance in asynchronous networks is also provided.

A number of protection functions are available for flexibility in use for different station types and busbar arrangements. The auto-reclose for single-, two-, and/or three-phase reclose includes priority circuits for multi-breaker arrangements. It co-operates with the synchrocheck function with high-speed or delayed reclosing. Several breaker failure functions are included to provide a breaker failure function independent from the protection IEDs, also for a complete one- and a half breaker diameter.

High set instantaneous phase and earth overcurrent, 4 step directional or non-directional delayed phase and earth overcurrent, thermal overload and two step under- and overvoltage functions are examples of the available functions allowing user to fulfill any application requirement.

Disturbance recording and fault locator are available to allow independent post-fault analysis after primary disturbances with a single failure in the protection system.

6 x 32 dual directional channels for intertrip and binary signals transfer is available on each included communication card in the communication between selected IEDs inside the station or in a near-by station.

The advanced logic capability, where the user logic is prepared with a graphical tool, allows special applications such as automatic opening of disconnectors in multi-breaker arrangements, closing of breaker rings, load transfer logics and so on. The graphical configuration tool ensures simple and fast testing and commissioning.

Serial data communication is via optical connections to ensure immunity against disturbances.

The wide application flexibility makes this product an excellent choice for both new installations and the refurbishment of existing installations.

2. Functionality

Differential protection

1Ph High impedance differential protection HZPDIF

The 1Ph High impedance differential protection HZPDIF function can be used when the involved CT cores have the same turn ratio and similar magnetizing characteristic. It utilizes an external summation of the phases and neutral current and a series resistor and a voltage dependent resistor externally to the IED.

Current protection

Instantaneous phase overcurrent protection PHPIOC

The instantaneous three phase overcurrent function has a low transient overreach and short tripping time to allow use as a high set short-circuit protection function.

Four step phase overcurrent protection OC4PTOC

The four step phase overcurrent protection function OC4PTOC has an inverse or definite time delay independent for each step separately.

All IEC and ANSI time delayed characteristics are available together with an optional user defined time characteristic.

The directional function is voltage polarized with memory. The function can be set to be directional or non-directional independently for each of the steps.

A 2nd harmonic blocking can be set individually for each step.

Instantaneous residual overcurrent protection EFPIOC

The Instantaneous residual overcurrent protection EFPIOC has a low transient overreach and short tripping times to allow the use for instantaneous earth-fault protection, with the reach limited to less than typical eighty percent of the line at minimum source impedance. EFPIOC can be configured to measure the residual current from the three-phase current inputs or the current from a separate current input. EFPIOC can be blocked by activating the input BLOCK.

Four step residual overcurrent protection EF4PTOC

The four step residual overcurrent protection EF4PTOC has an inverse or definite time delay independent for each step separately.

All IEC and ANSI time delayed characteristics are available together with an optional user defined characteristic.

The directional function is voltage polarized, current polarized or dual polarized.

EF4PTOC can be set directional or non-directional independently for each of the steps.

A second harmonic blocking can be set individually for each step.

EF4PTOC can be used as main protection for phase-to-earth faults.

EF4PTOC can also be used to provide a system back-up for example, in the case of the primary protection being out of service due to communication or voltage transformer circuit failure.

Directional operation can be combined together with corresponding communication logic in permissive or blocking teleprotection scheme. Current reversal and weak-end infeed functionality are available as well.

EF4PTOC can be configured to measure the residual current from the three-phase current inputs or the current from a separate current input.

Sensitive directional residual overcurrent and power protection SDEPSDE

In isolated networks or in networks with high impedance earthing, the earth fault current is significantly smaller than the short circuit currents. In addition to this, the magnitude of the fault current is almost independent on the fault location in the network. The protection can be selected to use either the residual current or residual power component $3U0 \cdot 3I0 \cdot \cos \varphi$, for operating quantity with maintained short circuit capacity. There is also available one nondirectional 3I0 step and one 3U0 overvoltage tripping step.

Thermal overload protection, one time constant LPTTR

The increasing utilizing of the power system closer to the thermal limits has generated a need of a thermal overload protection also for power lines.

A thermal overload will often not be detected by other protection functions and the introduction of the thermal overload protection can allow the protected circuit to operate closer to the thermal limits.

The three-phase current measuring protection has an I^2t characteristic with settable time constant and a thermal memory.

An alarm level gives early warning to allow operators to take action well before the line is tripped.

Thermal overload protection, two time constant TRPTTR

If the temperature of a power transformer/generator reaches very high values the equipment might be damaged. The insulation within the transformer/generator will have forced ageing. As a consequence of this the risk of internal phase-to-phase or phase-to-earth faults will increase. High temperature will degrade the quality of the transformer/generator oil.

The thermal overload protection estimates the internal heat content of the transformer/generator (temperature) continuously. This estimation is made by using a thermal model of the transformer/generator with two time constants, which is based on current measurement.

Two warning levels are available. This enables actions in the power system to be done before dangerous temperatures are reached. If the temperature continues to increase to the trip value, the protection initiates trip of the protected transformer/generator.

Breaker failure protection CCRBRF

Breaker failure protection (CCRBRF) ensures fast back-up tripping of surrounding breakers in case of own breaker failure to open. CCRBRF can be current based, contact based, or adaptive combination between these two principles.

A current check with extremely short reset time is used as check criteria to achieve a high security against unnecessary operation.

A contact check criteria can be used where the fault current through the breaker is small.

CCRBRF can be single- or three-phase initiated to allow use with single phase tripping applications. For the three-phase version of CCRBRF the current criteria can be set to operate only if two out of four for example, two phases or one phase plus the residual current start. This gives a higher security to the back-up trip command.

CCRBRF function can be programmed to give a single- or three-phase re-trip of the own breaker to avoid unnecessary tripping of surrounding breakers at an incorrect initiation due to mistakes during testing.

Stub protection STBPTOC

When a power line is taken out of service for maintenance and the line disconnector is opened in multi-breaker arrangements the voltage transformers will mostly be outside on the disconnected part. The primary line distance protection will thus not be able to operate and must be blocked.

The stub protection STBPTOC covers the zone between the current transformers and the open disconnector. The three-phase instantaneous overcurrent function is released from a normally open, NO (b) auxiliary contact on the line disconnector.

Pole discordance protection CCRPLD

Single pole operated circuit breakers can due to electrical or mechanical failures end up with the different poles in different positions (close-open). This can cause negative and zero sequence currents which gives thermal stress on rotating machines and can cause unwanted operation of zero sequence or negative sequence current functions.

Normally the own breaker is tripped to correct such a situation. If the situation persists the surrounding breaker should be tripped to clear the unsymmetrical load situation.

The Polediscordance protection function CCRPLD operates based on information from auxiliary contacts of the circuit breaker for the three phases with additional criteria from unsymmetrical phase current when required.

Directional over/underpower protection GOPPDOP/GUPPDUP

The directional over-/under-power protection (GOPPDOP/GUPPDUP) can be used

wherever a high/low active, reactive or apparent power protection or alarming is required. The functions can alternatively be used to check the direction of active or reactive power flow in the power system. There are number of applications where such functionality is needed. Some of them are:

- detection of reversed active power flow
- detection of high reactive power flow

Each function has two steps with definite time delay. Reset times for every step can be set as well.

Broken conductor check BRCPTOC

The main purpose of the function Broken conductor check (BRCPTOC) is the detection of broken conductors on protected power lines and cables (series faults). Detection can be used to give alarm only or trip the line breaker.

Voltage protection

Two step undervoltage protection UV2PTUV

Undervoltages can occur in the power system during faults or abnormal conditions. Two step undervoltage protection (UV2PTUV) function can be used to open circuit breakers to prepare for system restoration at power outages or as long-time delayed back-up to primary protection.

UV2PTUV has two voltage steps, each with inverse or definite time delay.

Two step overvoltage protection OV2PTOV

Overvoltages may occur in the power system during abnormal conditions, such as, sudden power loss, tap changer regulating failures, open line ends on long lines.

Two step overvoltage protection OV2PTOV can be used as open line end detector, normally then combined with directional reactive over-power function or as system voltage supervision, normally then giving alarm only or switching in reactors or switch out capacitor banks to control the voltage.

OV2PTOV has two voltage steps, each of them with inverse or definite time delayed.

OV2PTOV has an extremely high reset ratio to allow setting close to system service voltage.

Two step residual overvoltage protection ROV2PTOV

Residual voltages may occur in the power system during earth faults.

Two step residual overvoltage protection ROV2PTOV calculates the residual voltage from the three-phase voltage input transformers or from a single-phase voltage input transformer fed from an open delta or neutral point voltage transformer.

ROV2PTOV has two voltage steps, each with inverse or definite time delayed.

Voltage differential protection VDCPTOV

A voltage differential monitoring function is available. It compares the voltages from two three phase sets of voltage transformers and has one sensitive alarm step and one trip step. It can be used to supervise the voltage from two fuse groups or two different voltage transformers fuses as a fuse/MCB supervision function. Alternatively, it can be used as voltage differential protection (VDCPTOV)for shunt capacitor banks.

Loss of voltage check LOVPTUV

Loss of voltage check (LOVPTUV) is suitable for use in networks with an automatic system restoration function. LOVPTUV issues a three-pole trip command to the circuit breaker, if all three phase voltages fall below the set value for a time longer than the set time and the circuit breaker remains closed.

Frequency protection

Underfrequency protection SAPTUF

Underfrequency occurs as a result of lack of generation in the network.

Underfrequency protection SAPTUF is used for load shedding systems, remedial action schemes, gas turbine startup and so on.

SAPTUF is provided with an under voltage blocking.

The operation may be based on single-phase, phase-to-phase or positive-sequence voltage measurement.

Overfrequency protection SAPTOF

Overfrequency protection function SAPTOF is applicable in all situations, where reliable detection of high fundamental power system frequency is needed.

Overfrequency occurs at sudden load drops or shunt faults in the power network. Close to the generating plant, generator governor problems can also cause over frequency.

SAPTOF is used mainly for generation shedding and remedial action schemes. It is also used as a frequency stage initiating load restoring.

SAPTOF is provided with an undervoltage blocking. The operation is based on single-phase, phase-to-phase or positive-sequence voltage measurement.

Rate-of-change frequency protection SAPFRC

Rate-of-change frequency protection function (SAPFRC) gives an early indication of a main disturbance in the system. SAPFRC can be used for generation shedding, load shedding, remedial action schemes. SAPFRC can discriminate between positive or negative change of frequency.

SAPFRC is provided with an undervoltage blocking. The operation may be based on single-phase, phase-to-phase or positive-sequence voltage measurement.

Multipurpose protection

General current and voltage protection CVGAPC

The General current and voltage protection (CVGAPC) can be utilized as a negative sequence current protection detecting unsymmetrical conditions such as open phase or unsymmetrical faults.

CVGAPC can also be used to improve phase selection for high resistive earth faults, outside the distance protection reach, for the transmission line. Three functions are used, which measures the neutral current and each of the three phase voltages. This will give an independence from load currents and this phase selection will be used in conjunction with the detection of the earth fault from the directional earth fault protection function.

Secondary system supervision

Current circuit supervision CCSRDIF

Open or short circuited current transformer cores can cause unwanted operation of many protection functions such as differential, earth-fault current and negative-sequence current functions.

It must be remembered that a blocking of protection functions at an occurrence of open CT circuit will mean that the situation will remain and extremely high voltages will stress the secondary circuit.

Current circuit supervision (CCSRDIF) compares the residual current from a three phase set of current transformer cores with the neutral point current on a separate input taken from another set of cores on the current transformer.

A detection of a difference indicates a fault in the circuit and is used as alarm or to block protection functions expected to give unwanted tripping.

Fuse failure supervision (RFUF)

Failures in the secondary circuits of the voltage transformer can cause unwanted operation of distance protection, undervoltage protection, neutral point voltage protection, energizing function (synchronism check) etc. The fuse failure supervision function prevents such unwanted operations.

There are three methods to detect fuse failures.

The method based on detection of zero sequence voltage without any zero sequence current. This is a useful principle in a directly

earthed system and can detect one or two phase fuse failures.

The method based on detection of negative sequence voltage without any negative sequence current. This is a useful principle in a non-directly earthed system and can detect one or two phase fuse failures.

The method based on detection of du/dt-di/dt where a change of the voltage is compared to a change in the current. Only voltage changes means a voltage transformer fault. This principle can detect one, two or three phase fuse failures.

Control

Synchronizing, synchrocheck and energizing check SESRSYN

The Synchronizing function allows closing of asynchronous networks at the correct moment including the breaker closing time. The systems can thus be reconnected after an autoreclose or manual closing, which improves the network stability.

Synchrocheck, energizing check (SESRSYN) function checks that the voltages on both sides of the circuit breaker are in synchronism, or with at least one side dead to ensure that closing can be done safely.

SESRSYN function includes a built-in voltage selection scheme for double bus and 1½ breaker or ring busbar arrangements.

Manual closing as well as automatic reclosing can be checked by the function and can have different settings.

For systems which are running asynchronous a synchronizing function is provided. The main purpose of the synchronizing function is to provide controlled closing of circuit breakers when two asynchronous systems are going to be connected. It is used for slip frequencies that are larger than those for synchrocheck and lower than a set maximum level for the synchronizing function.

Autorecloser SMBRREC

The autorecloser (SMBRREC) function provides high-speed and/or delayed auto-reclosing for single or multi-breaker applications.

Up to five reclosing attempts can be programmed. The first attempt can be single-, two and/or three phase for single phase or multi-phase faults respectively.

Multiple autoreclosing functions are provided for multi-breaker arrangements. A priority circuit allows one circuit breaker to close first and the second will only close if the fault proved to be transient.

Each autoreclosing function can be configured to co-operate with a synchrocheck function.

Apparatus control APC

The apparatus control is a function for control and supervision of circuit breakers, disconnectors and earthing switches within a bay. Permission to operate is given after evaluation of conditions from other functions such as interlocking, synchrocheck, operator place selection and external or internal blockings.

Features in the apparatus control function:

- Select-Execute principle to give high reliability
- Selection function to prevent simultaneous operation
- Selection and supervision of operator place
- Command supervision
- Block/deblock of operation
- Block/deblock of updating of position indications
- Substitution of position indications
- Overriding of interlocking functions
- Overriding of synchrocheck
- Operation counter
- Suppression of Mid position

Two types of command models can be used:

- Direct with normal security
- SBO (Select-Before-Operate) with enhanced security

Normal security means that only the command is evaluated and the resulting position is not supervised. Enhanced security means that the command is evaluated with an additional supervision of the status value of the control object. The command security with enhanced security is always terminated by a CommandTermination service primitive.

Control operation can be performed from the local HMI under authority control if so defined.

Interlocking

The interlocking function blocks the possibility to operate primary switching devices, for instance when a disconnector is under load, in order to prevent material damage and/or accidental human injury.

Each apparatus control function has interlocking modules included for different switchyard arrangements, where each function handles interlocking of one bay. The interlocking function is distributed to each IED and is not dependent on any central function. For the station-wide interlocking, the IEDs communicate via the system-wide interbay bus (IEC 61850-8-1) or by using hard wired binary inputs/outputs. The interlocking conditions depend on the circuit configuration and apparatus position status at any given time.

For easy and safe implementation of the interlocking function, the IED is delivered with standardized and tested software interlocking modules containing logic for the interlocking conditions. The interlocking conditions can be altered, to meet the customer's specific requirements, by adding configurable logic by means of the graphical configuration tool.

Voltage control TR1ATCC, TR8ATCC, TCMYLTC and TCLYLTC

The voltage control functions, Automatic voltage control for tap changer, single control (TR1ATCC,), Automatic voltage control for tap changer, parallel control (TR8ATCC,) and Tap changer control and supervision, 6 binary inputs (TCMYLTC,) as well as Tap changer control and supervision, 32 binary inputs TCLYLTC are used for control of power transformers with a motor driven load tap changer. The function provides automatic regulation of the voltage on the secondary side of transformers or alternatively on a load point further out in the network.

Control of a single transformer, as well as control of up to eight transformers in parallel is possible. For parallel control of power transformers, three alternative methods are available, the master-follower method, the circulating current method and the reverse reactance method. The two former methods require exchange of information between the parallel transformers and this is provided for within IEC61850-8-1.

Voltage control includes many extra features such as possibility of to avoid simultaneous tapping of parallel transformers, hot stand by regulation of a transformer in a group which regulates it to a correct tap position even though the LV CB is open, compensation for a possible capacitor bank on the LV side bay of a transformer, extensive tap changer monitoring including contact wear and hunting detection, monitoring of the power flow in the transformer so that for example, the voltage control can be blocked if the power reverses etc.

Logic rotating switch for function selection and LHMI presentation SLGGIO

The logic rotating switch for function selection and LHMI presentation function (SLGGIO) (or the selector switch function block) is used to get a selector switch functionality similar with the one provided by a hardware selector switch. Hardware selector switches are used extensively by utilities, in order to have different functions operating on pre-set values. Hardware switches are however sources for maintenance issues, lower system reliability

and extended purchase portfolio. The virtual selector switches eliminate all these problems.

Selector mini switch VSGGIO

Selector mini switch (VSGGIO) function block is a multipurpose function used in the configuration tool in PCM600 for a variety of applications, as a general purpose switch.

VSGGIO can be controlled from the menu or from a symbol on the single line diagram (SLD) on the local HMI.

Single point generic control 8 signals SPC8GGIO

The Single point generic control 8 signals (SPC8GGIO) function block is a collection of 8 single point commands, designed to bring in commands from REMOTE (SCADA) to those parts of the logic configuration that do not need complicated function blocks that have the capability to receive commands (for example, SCSWI). In this way, simple commands can be sent directly to the IED outputs, without confirmation. Confirmation (status) of the result of the commands is supposed to be achieved by other means, such as binary inputs and SPGGIO function blocks.

Scheme communication

Scheme communication logic for distance or overcurrent protection ZCPSCH

To achieve instantaneous fault clearance for all line faults, a scheme communication logic is provided. All types of communication schemes for example, permissive underreaching, permissive overreaching, blocking, unblocking, intertrip are available.

The built-in communication module (LDCM) can be used for scheme communication signaling when included.

Current reversal and weak-end infeed logic for distance protection ZCRWPSCH

The current reversal function is used to prevent unwanted operations due to current reversal when using permissive overreach protection schemes in application with parallel lines when the overreach from the two ends overlap on the parallel line.

The weak-end infeed logic is used in cases where the apparent power behind the protection can be too low to activate the distance protection function. When activated, received carrier signal together with local under voltage criteria and no reverse zone operation gives an instantaneous trip. The received signal is also echoed back to accelerate the sending end.

Three phase or phase segregated scheme logic is available.

Local acceleration logic ZCLCPLAL

To achieve fast clearing of faults on the whole line, when no communication channel is available, local acceleration logic (ZCLCPLAL) can be used. This logic enables fast fault clearing during certain conditions, but naturally, it can not fully replace a communication channel.

The logic can be controlled either by the autorecloser (zone extension) or by the loss-of-load current (loss-of-load acceleration).

Scheme communication logic for residual overcurrent protection ECPSCH

To achieve fast fault clearance of earth faults on the part of the line not covered by the instantaneous step of the residual overcurrent protection, the directional residual overcurrent protection can be supported with a logic that uses communication channels.

In the directional scheme, information of the fault current direction must be transmitted to the other line end. With directional comparison, a short operates time of the protection including a channel transmission time, can be achieved. This short operate time enables rapid autoreclosing function after the fault clearance.

The communication logic module for directional residual current protection enables blocking as well as permissive under/overreaching schemes. The logic can also be supported by additional logic for weak-end

infeed and current reversal, included in Current reversal and weak-end infeed logic for residual overcurrent protection Current reversal and weak-end infeed logic for residual overcurrent protection (ECRWPSCH) function.

Current reversal and weak-end infeed logic for residual overcurrent protection ECRWPSCH

The Current reversal and weak-end infeed logic for residual overcurrent protection ECRWPSCH is a supplement to Scheme communication logic for residual overcurrent protection ECPSCH.

To achieve fast fault clearing for all earth faults on the line, the directional earth-fault protection function can be supported with logic that uses communication channels.

The 670 series IEDs have for this reason available additions to scheme communication logic.

If parallel lines are connected to common busbars at both terminals, overreaching permissive communication schemes can trip unselectively due to fault current reversal. This unwanted tripping affects the healthy line when a fault is cleared on the other line. This lack of security can result in a total loss of interconnection between the two buses. To avoid this type of disturbance, a fault current reversal logic (transient blocking logic) can be used.

Permissive communication schemes for residual overcurrent protection, can basically operate only when the protection in the remote terminal can detect the fault. The detection requires a sufficient minimum residual fault current, out from this terminal. The fault current can be too low due to an opened breaker or high positive and/or zero sequence source impedance behind this terminal. To overcome these conditions, weak end infeed (WEI) echo logic is used.

Logic

Tripping logic SMPPTRC

A function block for protection tripping is provided for each circuit breaker involved in the tripping of the fault. It provides the pulse prolongation to ensure a trip pulse of sufficient length, as well as all functionality necessary for correct co-operation with autoreclosing functions.

The trip function block includes functionality for evolving faults and breaker lock-out.

Trip matrix logic TMAGGIO

Trip matrix logic (TMAGGIO) function is used to route trip signals and/or other logical output signals to different output contacts on the IED.

TMAGGIO output signals and the physical outputs are available in PCM600 and this allows the user to adapt the signals to the physical tripping outputs according to the specific application needs.

Configurable logic blocks

A number of logic blocks and timers are available for user to adapt the configuration to the specific application needs.

- **OR** function block.
- **INVERTER** function blocks that inverts the input signal.
- **PULSETIMER** function block can be used, for example, for pulse extensions or limiting of operation of outputs.
- **GATE** function block is used for controlling if a signal should be able to pass from the input to the output or not depending on a setting.
- **XOR** function block.
- **LOOPDELAY** function block used to delay the output signal one execution cycle.

- **TIMERSET** function has pick-up and drop-out delayed outputs related to the input signal. The timer has a settable time delay.

- **AND** function block.

- **SRMEMORY** function block is a flip-flop that can set or reset an output from two inputs respectively. Each block has two outputs where one is inverted. The memory setting controls if the block after a power interruption should return to the state before the interruption, or be reset. Set input has priority.

- **RSMEMORY** function block is a flip-flop that can reset or set an output from two inputs respectively. Each block has two outputs where one is inverted. The memory setting controls if the block after a power interruption should return to the state before the interruption, or be reset. Reset input has priority.

Extension logic package

The logic extension block package includes additional trip matrix logic and configurable logic blocks.

Fixed signal function block

The Fixed signals function (FXDSIGN) generates a number of pre-set (fixed) signals that can be used in the configuration of an IED, either for forcing the unused inputs in other function blocks to a certain level/value, or for creating a certain logic.

Monitoring

Measurements CVMMXU

The service value function is used to get on-line information from the IED. These service values makes it possible to display on-line information on the local HMI and on the Substation automation system about:

- measured voltages, currents, frequency, active, reactive and apparent power and power factor
- the primary and secondary phasors
- differential currents, bias currents
- positive, negative and zero sequence currents and voltages
- mA, input currents
- pulse counters
- event counters
- measured values and other information of the different parameters for included functions
- logical values of all binary in- and outputs and
- general IED information.

Supervision of mA input signals (MVGGIO)

The main purpose of the function is to measure and process signals from different measuring transducers. Many devices used in process control represent various parameters such as frequency, temperature and DC battery voltage as low current values, usually in the range 4-20 mA or 0-20 mA.

Alarm limits can be set and used as triggers, e.g. to generate trip or alarm signals.

The function requires that the IED is equipped with the mA input module.

Event counter CNTGGIO

Event counter (CNTGGIO) has six counters which are used for storing the number of times each counter input has been activated.

Disturbance report DRPRDRE

Complete and reliable information about disturbances in the primary and/or in the secondary system together with continuous event-logging is accomplished by the disturbance report functionality.

Disturbance report DRPRDRE, always included in the IED, acquires sampled data of all selected analog input and binary signals connected to the function block that is, maximum 40 analog and 96 binary signals.

Disturbance report functionality is a common name for several functions:

- Event list
- Indications
- Event recorder
- Trip value recorder
- Disturbance recorder
- Fault locator

Disturbance report function is characterized by great flexibility regarding configuration, starting conditions, recording times and large storage capacity.

A disturbance is defined as an activation of an input in the AxRADR or BxRBDR function blocks, which is set to trigger the disturbance recorder. All signals from start of pre-fault time to the end of post-fault time will be included in the recording.

Every disturbance report recording is saved in the IED in the standard Comtrade format. The same applies to all events, which are continuously saved in a ring-buffer. The local HMI is used to get information about the recordings, but the disturbance report files may be uploaded to PCM600 and further analysis using the disturbance handling tool.

Event list DRPRDRE

Continuous event-logging is useful for monitoring of the system from an overview perspective and is a complement to specific disturbance recorder functions.

The event list logs all binary input signals connected to the Disturbance report function. The list may contain of up to 1000 time-tagged events stored in a ring-buffer.

Indications DRPRDRE

To get fast, condensed and reliable information about disturbances in the primary and/or in the secondary system it is important to know, for example binary signals that have changed status during a disturbance. This information is used in the short perspective to get information via the local HMI in a straightforward way.

There are three LEDs on the local HMI (green, yellow and red), which will display status information about the IED and the Disturbance report function (trigged).

The Indication list function shows all selected binary input signals connected to the Disturbance report function that have changed status during a disturbance.

Event recorder DRPRDRE

Quick, complete and reliable information about disturbances in the primary and/or in the secondary system is vital, for example, time tagged events logged during disturbances. This information is used for different purposes in the short term (for example corrective actions) and in the long term (for example Functional Analysis).

The event recorder logs all selected binary input signals connected to the Disturbance report function. Each recording can contain up to 150 time-tagged events.

The event recorder information is available for the disturbances locally in the IED.

The event recording information is an integrated part of the disturbance record (Comtrade file).

Trip value recorder DRPRDRE

Information about the pre-fault and fault values for currents and voltages are vital for the disturbance evaluation.

The Trip value recorder calculates the values of all selected analog input signals connected to the Disturbance report function. The result is magnitude and phase angle before and during the fault for each analog input signal.

The trip value recorder information is available for the disturbances locally in the IED.

The trip value recorder information is an integrated part of the disturbance record (Comtrade file).

Disturbance recorder DRPRDRE

The Disturbance recorder function supplies fast, complete and reliable information about disturbances in the power system. It facilitates understanding system behavior and related primary and secondary equipment during and after a disturbance. Recorded information is used for different purposes in the short perspective (for example corrective actions) and long perspective (for example Functional Analysis).

The Disturbance recorder acquires sampled data from all selected analog input and binary signals connected to the Disturbance report function (maximum 40 analog and 96 binary signals). The binary signals are the same signals as available under the event recorder function.

The function is characterized by great flexibility and is not dependent on the operation of protection functions. It can record disturbances not detected by protection functions.

The disturbance recorder information for the last 100 disturbances are saved in the IED and the local HMI is used to view the list of recordings.

Event function

When using a Substation Automation system with LON or SPA communication, time-tagged events can be sent at change or cyclically from the IED to the station level. These events are created from any available signal in the IED that is connected to the Event function (EVENT). The event function block is used for LON and SPA communication.

Analog and double indication values are also transferred through EVENT function.

Fault locator LMBRFLO

The accurate fault locator is an essential component to minimize the outages after a persistent fault and/or to pin-point a weak spot on the line.

The fault locator is an impedance measuring function giving the distance to the fault in percent, km or miles. The main advantage is the high accuracy achieved by compensating for load current and for the mutual zero-sequence effect on double circuit lines.

The compensation includes setting of the remote and local sources and calculation of the distribution of fault currents from each side. This distribution of fault current, together with recorded load (pre-fault) currents, is used to exactly calculate the fault position. The fault can be recalculated with new source data at the actual fault to further increase the accuracy.

Especially on heavily loaded long lines (where the fault locator is most important) where the source voltage angles can be up to 35-40 degrees apart the accuracy can be still maintained with the advanced compensation included in fault locator.

Measured value expander block RANGE_XP

The current and voltage measurements functions (CVMMXU, CMMXU, VMMXU and VNMMXU), current and voltage sequence measurement functions (CMSQI and VMSQI) and IEC 61850 generic communication I/O functions (MVGGIO) are provided with measurement supervision functionality. All measured values can be supervised with four settable limits that is low-low limit, low limit, high limit and high-high limit. The measure value expander block (RANGE_XP) has been introduced to be able to translate the integer output signal from the measuring functions to 5 binary signals that is below low-low limit, below low limit, normal, above high-high limit or above high limit. The output signals can be used as conditions in the configurable logic.

Metering

Pulse counter logic PCGGIO

Pulse counter (PCGGIO) function counts externally generated binary pulses, for instance pulses coming from an external energy meter, for calculation of energy

consumption values. The pulses are captured by the binary input module and then read by the pulse counter function. A scaled service value is available over the station bus. The special Binary input module with enhanced pulse counting capabilities must be ordered to achieve this functionality.

Function for energy calculation and demand handling ETPMMTR

Outputs from Measurements (CVMMXU) function can be used to calculate energy. Active as well as reactive values are calculated in import and export direction. Values can be read or generated as pulses. Maximum demand power values are also calculated by the function.

Basic IED functions

Time synchronization

Use the time synchronization source selector to select a common source of absolute time for the IED when it is a part of a control and a protection system. This makes comparison of events and disturbance data between all IEDs in a station automation system possible.

Human machine interface

The local human machine interface is available in a small and a medium sized model. The difference between the two models is the size of the LCD. The small size LCD can display seven lines of text and the medium size LCD can display the single line diagram with up to 15 objects on each page. Up to 12 single line diagram pages can be defined, depending on the product capability.

The local HMI is divided into zones with different functionality.

- Status indication LEDs.
- Alarm indication LEDs, which consist of 15 LEDs (6 red and 9 yellow) with user printable label. All LEDs are configurable from PCM600.
- Liquid crystal display (LCD).
- Keypad with push buttons for control and navigation purposes, switch for selection between local and remote control and reset.
- Isolated RJ45 communication port.

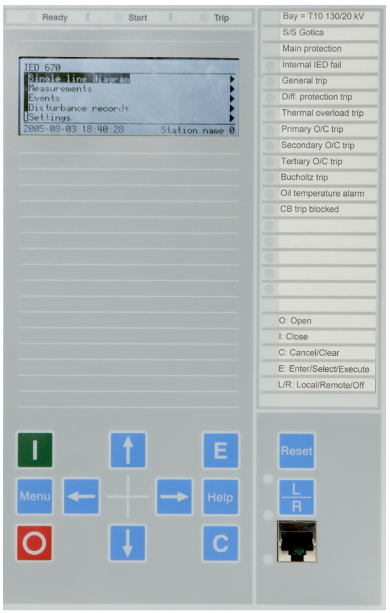

en05000055.jpg

Figure 1. Small, alpha numeric HMI

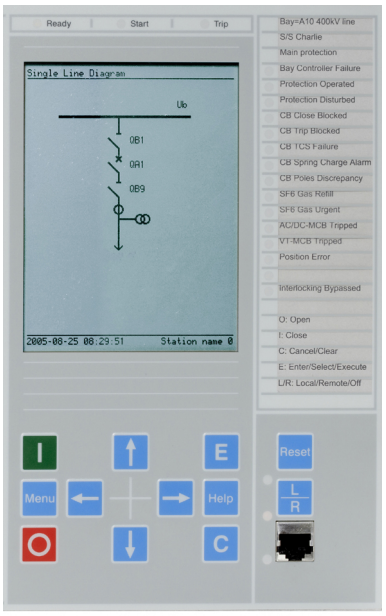

en05000056.jpg

Figure 2. Medium graphic HMI, 15 controllable objects

Station communication

Overview

Each IED is provided with a communication interface, enabling it to connect to one or many substation level systems or equipment, either on the Substation Automation (SA) bus or Substation Monitoring (SM) bus.

Following communication protocols are available:

- IEC 61850-8-1 communication protocol
- LON communication protocol
- SPA or IEC 60870-5-103 communication protocol
- DNP3.0 communication protocol

Theoretically, several protocols can be combined in the same IED.

IEC 61850-8-1 communication protocol

The IED is equipped with single or double optical Ethernet rear ports (order dependent) for the new substation communication standard IEC 61850-8-1 for the station bus. IEC 61850-8-1 communication is also possible from the optical Ethernet front port. IEC 61850-8-1 protocol allows intelligent devices (IEDs) from different vendors to exchange information and simplifies system engineering. Peer-to-peer communication according to GOOSE is part of the standard. Disturbance files uploading is provided.

Serial communication, LON

Existing stations with ABB station bus LON can be extended with use of the optical LON interface. This allows full SA functionality including peer-to-peer messaging and cooperation between existing ABB IED's and the new IED 670.

SPA communication protocol

A single glass or plastic port is provided for the ABB SPA protocol. This allows extensions of simple substation automation systems but the main use is for Substation Monitoring Systems SMS.

IEC 60870-5-103 communication protocol

A single glass or plastic port is provided for the IEC60870-5-103 standard. This allows design of simple substation automation systems including equipment from different vendors. Disturbance files uploading is provided.

DNP3.0 communication protocol

An electrical RS485 and an optical Ethernet port is available for the DNP3.0 communication. DNP3.0 Level 2 communication with unsolicited events, time synchronizing and disturbance reporting is provided for communication to RTUs, Gateways or HMI systems.

Single command, 16 signals

The IEDs can receive commands either from a substation automation system or from the local HMI. The command function block has outputs that can be used, for example, to control high voltage apparatuses or for other user defined functionality.

Multiple command and transmit

When 670 IED's are used in Substation Automation systems with LON, SPA or IEC60870-5-103 communication protocols the Event and Multiple Command function blocks are used as the communication interface for vertical communication to station HMI and gateway and as interface for horizontal peer-to-peer communication (over LON only).

Remote communication

Analog and binary signal transfer to remote end

Three analog and eight binary signals can be exchanged between two IEDs. This functionality is mainly used for the line differential protection. However it can be used in other products as well. An IED can communicate with up to 4 remote IEDs.

Binary signal transfer to remote end, 192 signals

If the communication channel is used for transfer of binary signals only, up to 192 binary signals can be exchanged between two IEDs. For example, this functionality can be used to send information such as status of primary switchgear apparatus or intertripping signals to the remote IED. An IED can communicate with up to 4 remote IEDs.

Line data communication module, short and medium range LDCM

The line data communication module (LDCM) is used for communication between the IEDs situated at distances <110 km or from the IED to optical to electrical converter with G. 703 or G.703E1 interface located on a distances <3 km away. The LDCM module sends and receives data, to and from another LDCM module. The IEEE/ANSI C37.94 standard format is used.

Galvanic interface G.703 resp G.703E1

The external galvanic data communication converter G.703/G.703E1 makes an optical-to-galvanic conversion for connection to a multiplexer. These units are designed for 64 kbit/s resp 2Mbit/s operation. The converter is delivered with 19” rack mounting accessories.

3. Hardware description

Hardware modules

Power supply module PSM

The power supply module is used to provide the correct internal voltages and full isolation between the terminal and the battery system. An internal fail alarm output is available.

Binary input module BIM

The binary input module has 16 optically isolated inputs and is available in two versions, one standard and one with enhanced pulse counting capabilities on the inputs to be used with the pulse counter function. The binary inputs are freely programmable and can be used for the input of logical signals to any of the functions. They can also be included in the disturbance recording and event-recording functions. This enables extensive monitoring and evaluation of operation of the IED and for all associated electrical circuits.

Binary output module BOM

The binary output module has 24 independent output relays and is used for trip output or any signaling purpose.

Static binary output module SOM

The static binary output module has six fast static outputs and six change over output relays for use in applications with high speed requirements.

Binary input/output module (IOM)

The binary input/output module is used when only a few input and output channels are needed. The ten standard output channels are used for trip output or any signalling purpose. The two high speed signal output channels are used for applications where short operating time is essential. Eight optically isolated binary inputs cater for required binary input information.

mA input module MIM

The milli-ampere input module is used to interface transducer signals in the –20 to +20 mA range from for example OLTC position, temperature or pressure transducers. The module has six independent, galvanically separated channels.

Optical ethernet module OEM

The optical fast-ethernet module is used to connect an IED to the communication buses (like the station bus) that use the IEC 61850-8-1 protocol (port A, B). The module has one or two optical ports with ST connectors.

Serial SPA/IEC 60870-5-103 and LON communication module SLM

The optical serial channel and LON channel module is used to connect an IED to the communication that use SPA, LON, or IEC60870–5–103. The module has two optical ports for plastic/plastic, plastic/glass, or glass/glass. One port is used for SPA and IEC 60870-5-103 one port is used for LON.

Line data communication module LDCM

Each module has one optical port, one for each remote end to which the IED communicates.

Alternative cards for Medium range (1310 nm single mode) and Short range (850 nm multi mode) are available.

Galvanic RS485 serial communication module

The galvanic RS485 serial communication module is used as an alternative for DNP3.0 communication.

GPS time synchronization module GSM

This module includes the GPS receiver used for time synchronization. The GPS has one SMA contact for connection to an antenna.

IRIG-B Time synchronizing module

The IRIG-B time synchronizing module is used for accurate time synchronizing of the IED from a station clock.

Electrical (BNC) and optical connection (ST) for 0XX and 12X IRIG-B support.

Transformer input module TRM

The transformer input module is used to galvanically separate and transform the secondary currents and voltages generated by the measuring transformers. The module has twelve inputs in different combinations of currents and voltage inputs.

Alternative connectors of Ring lug or Compression type can be ordered.

High impedance resistor unit

The high impedance resistor unit, with resistors for pick-up value setting and a voltage dependent resistor, is available in a single phase unit and a three phase unit. Both are mounted on a 1/1 19 inch apparatus plate with compression type termnals.

Layout and dimensions

Dimensions

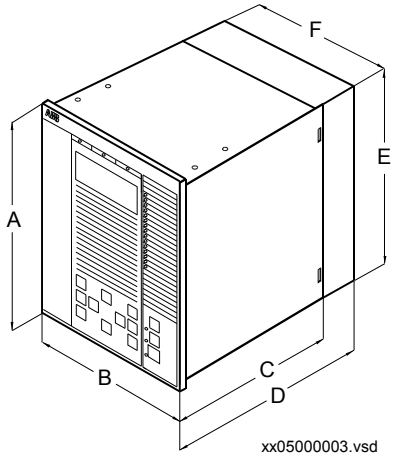

Figure 3. 1/2 x 19” case with rear cover

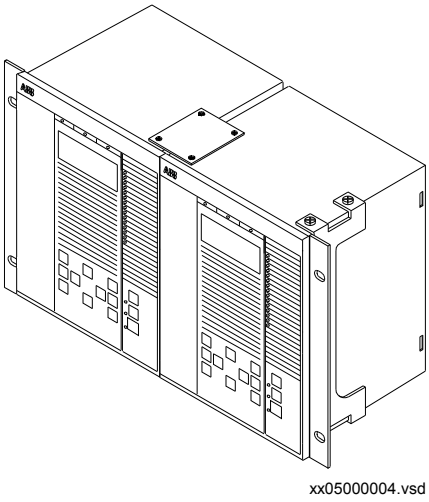

Figure 4. Side-by-side mounting

Case size	A	B	C	D	E	F
6U, 1/2 x 19”	265.9	223.7	201.1	242.1	252.9	205.7
6U, 3/4 x 19”	265.9	336.0	201.1	242.1	252.9	318.0
6U, 1/1 x 19”	265.9	448.1	201.1	242.1	252.9	430.3
						(mm)

Mounting alternatives

Following mounting alternatives (IP40 protection from the front) are available:

- 19” rack mounting kit
- Flush mounting kit with cut-out dimensions:

- 1/2 case size (h) 254.3 mm (w) 210.1 mm
- 3/4 case size (h) 254.3 mm (w) 322.4 mm
- 1/1 case size (h) 254.3 mm (w) 434.7 mm

- Wall mounting kit

See ordering for details about available mounting alternatives.

4. Connection diagrams

Table 1. Designations for 1/2 x 19” casing with 1 TRM slot

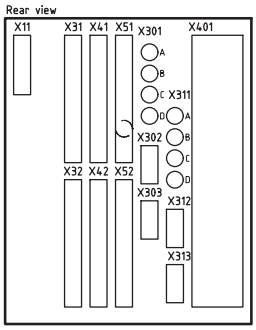

Module	Rear Positions
PSM	X11
BIM, BOM, SOM or IOM	X31 and X32 etc. to X51 and X52
BIM, BOM, SOM, IOM or GSM	X51, X52
SLM	X301:A, B, C, D
IRIG-B 1)	X302
OEM	X311:A, B, C, D
RS485 or LDCM 2) 3)	X312
LDCM 2)	X313
TRM	X401

1) IRIG-B installation, when included in seat P30:2
2) LDCM installation sequence: P31:2 or P31:3
3) RS485 installation, when included in seat P31:2
Note!
1 One LDCM can be included depending of availability of IRIG-B respective RS485 modules.

Table 2. Designations for 3/4 x 19” casing with 1 TRM slot

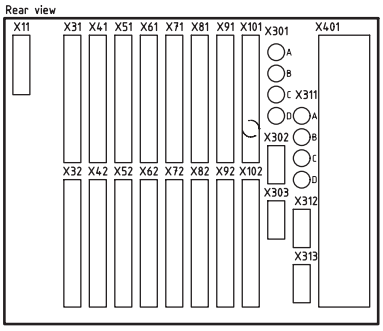

Module	Rear Positions
PSM	X11
BIM, BOM, SOM, IOM or MIM	X31 and X32 etc. to X101 and X102
BIM, BOM, SOM, IOM, MIM or GSM	X101, X102
SLM	X301:A, B, C, D
IRIG-B or LDCM 1) 2)	X302
LDCM 2)	X303
OEM 4)	X311:A, B, C, D
RS485 or LDCM 2) 3)	X312
LDCM 2)	X313
TRM	X401

1) IRIG-B installation, when included in seat P30:2
2) LDCM installation sequence: P31:2, P31:3, P30:2 and P30:3
3) RS485 installation, when included in seat P31:2 or P31:3
4) OEM X311:A, B (IEC 61850-8-1). X311:C, D (IEC 61850-8-1
Note!
2-4 LDCM can be included depending of availability of IRIG-B respective RS485 modules.

Table 3. Designations for 3/4 x 19” casing with 2 TRM slot

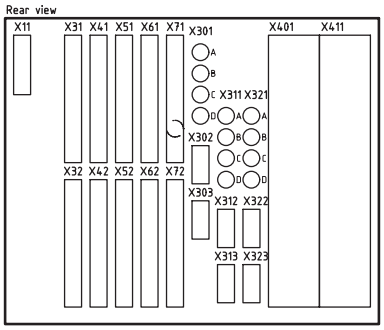

Module	Rear Positions
PSM	X11
BIM, BOM, SOM, IOM or MIM	X31 and X32 etc. to X71 and X72
BIM, BOM, SOM, IOM, MIM or GSM	X71, X72
SLM	X301:A, B, C, D
IRIG-B or LDCM 1,2)	X302
LDCM 2)	X303
OEM 4)	X311:A, B, C, D
RS485 or LDCM 2) 3)	X312
LDCM 2)	X313
LDCM 2)	X322
LDCM 2)	X323
TRM 1	X401
TRM 2	X411

1) IRIG-B installation, when included in seat P30:2
2) LDCM installation sequence: P31:2, P31:3, P32:2, P32:3, P30:2 and P30:3
3) RS485 installation, when included in seat P31:2, P31:3, P32:2 or P32:3
4) OEM X311:A, B (IEC 61850-8-1). (X311:C, D IEC 61850-8-1)
Note!
2-4 LDCM can be included depending of availability of IRIG-B respective RS485 modules.
When IRIG-B, RS485 and 4 pc of LDCM are in use, needs a second ADM.

Table 4. Designations for 1/1 x 19” casing with 1 TRM slot

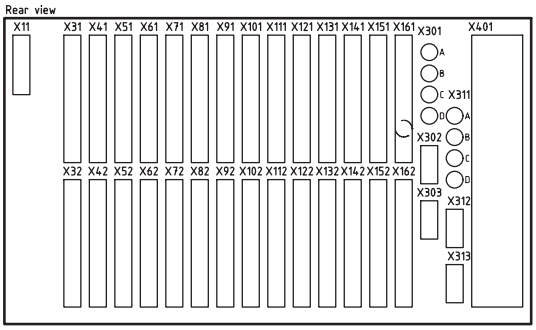

Module	Rear Positions
PSM	X11
BIM, BOM, SOM, IOM or MIM	X31 and X32 etc. to X161 and X162
BIM, BOM, SOM, IOM, MIM or GSM	X161 and X162
SLM	X301:A, B, C, D
IRIG-B	X302
LDCM 1)	X313 and X303
OEM 2)	X311:A, B, C, D
RS485	X312, X313
TRM	X401

Note!
1) 2 LDCM can be included. First LDCM always in position X313, second LDCM always in position X303.
2) OEM X311:A, B (IEC 61850-8-1). OEM X311:C, D (IEC 61850-8-1)

Table 5. Designations for 1/1 x 19” casing with 2 TRM slots

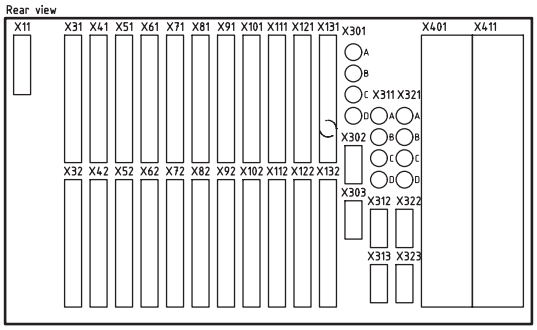

Module	Rear Positions
PSM	X11
BIM, BOM, SOM, IOM or MIM	X31 and X32 etc. to X131 and X132
BIM, BOM, SOM, IOM, MIM or GSM	X131, X132
SLM	X301:A, B, C, D
IRIG-B or LDCM 1,2)	X302
LDCM 2)	X303
OEM 4)	X311:A, B, C, D
RS485 or LDCM 2) 3)	X312
LDCM 2)	X313
LDCM 2)	X322
LDCM 2)	X323
TRM 1	X401
TRM 2	X411

1) IRIG-B installation, when included in seat P30:2
2) LDCM installation sequence: P31:2, P31:3, P32:2, P32:3, P30:2 and P30:3
3) RS485 installation, when included in seat P31:2, P31:3, P32:2 or P32:4
4) OEM X311:A, B (IEC 61850-8-1). OEM X311:C, D
Note!
2-4 LDCM can be included depending of availability of IRIG-B respective RS485 modules. When IRIG-B, RS485 and 4 pc of LDCM are in use, needs a second ADM.

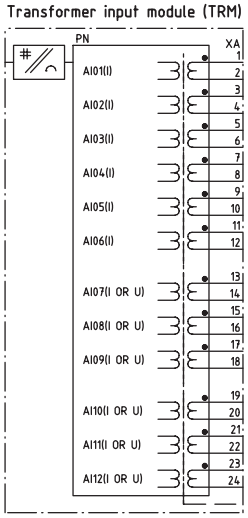

Figure 5. Transformer input module (TRM)

- Indicates high polarity

	CT/VT-input designation according to figure 5											
Current/voltage configuration (50/60 Hz)	AI01	AI02	AI03	AI04	AI05	AI06	AI07	AI08	AI09	AI10	AI11	AI12
12I, 1A	1A	1A	1A	1A	1A	1A	1A	1A	1A	1A	1A	1A
12I, 5A	5A	5A	5A	5A	5A	5A	5A	5A	5A	5A	5A	5A
9I+3U, 1A	1A	1A	1A	1A	1A	1A	1A	1A	1A	110-220V	110-220V	110-220V
9I+3U, 5A	5A	5A	5A	5A	5A	5A	5A	5A	5A	110-220V	110-220V	110-220V
5I, 1A +4I, 5A +3U	1A	1A	1A	1A	1A	5A	5A	5A	5A	110-220V	110-220V	110-220V
7I+5U, 1A	1A	1A	1A	1A	1A	1A	1A	110-220V	110-220V	110-220V	110-220V	110-220V
7I+5U, 5A	5A	5A	5A	5A	5A	5A	5A	110-220V	110-220V	110-220V	110-220V	110-220V
6I, 5A +1I, 1A +5U	5A	5A	5A	5A	5A	5A	1A	110-220V	110-220V	110-220V	110-220V	110-220V
3I, 5A +4I, 1A +5U	5A	5A	5A	1A	1A	1A	1A	110-220V	110-220V	110-220V	110-220V	110-220V
6I+6U, 1A	1A	1A	1A	1A	1A	1A	110-220V	110-220V	110-220V	110-220V	110-220V	110-220V
6I+6U, 5A	5A	5A	5A	5A	5A	5A	110-220V	110-220V	110-220V	110-220V	110-220V	110-220V
3I, 5A +3I, 1A +6U	5 A	5 A	5 A	1A	1A	1A	110-220V	110-220V	110-220V	110-220V	110-220V	110-220V

6I, 1A	1A	1A	1A	1A	1A	1A	-	-	-	-	-	-
6I, 5A	5A	5A	5A	5A	5A	5A	-	-	-	-	-	-

Note that internal polarity can be adjusted by setting of analog input CT neutral direction and/or on SMAI pre-processing function blocks.

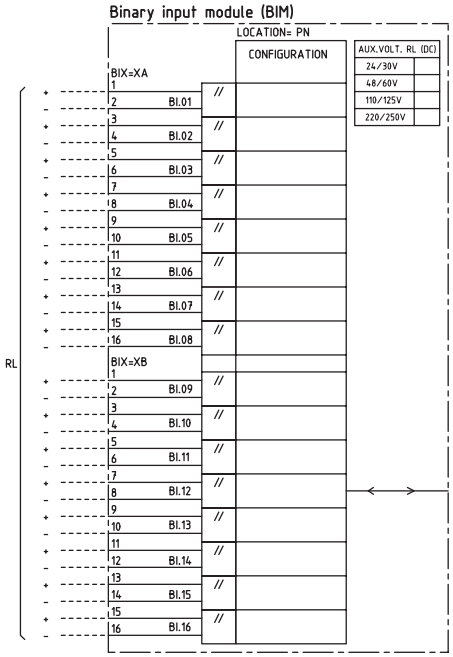

Figure 6. Binary input module (BIM). Input contacts named XA corresponds to rear position X31, X41, and so on, and input contacts named XB to rear position X32, X42, and so on.

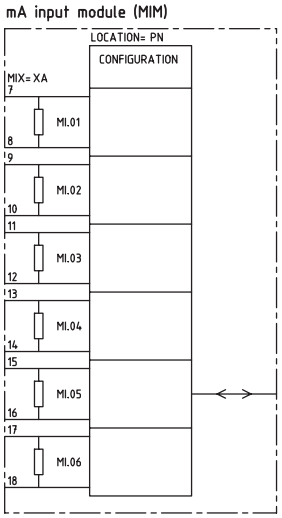

Figure 7. mA input module (MIM)

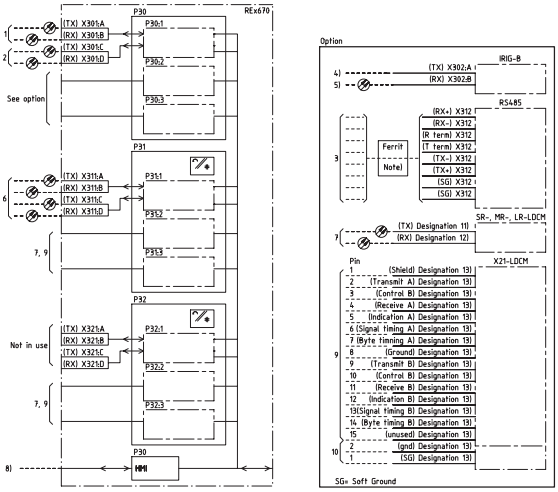

Figure 8. Communication interfaces (OEM, LDCM, SLM and HMI)

Note to figure 8

1) Rear communication port SPA/IEC 61850-5-103, ST-connector for glass alt. HFBR Snap-in connector for plastic as ordered

2) Rear communication port LON, ST connector for glass alt. HFBR Snap-in connector for plastic as ordered

3) Rear communication port RS485, terminal block

4) Time synchronization port IRIG-B, BNC-connector

5) Time synchronization port PPS or Optical IRIG-B, ST-connector

6) Rear communication port IEC 61850-8-1 for X311:A, B, C, D, ST-connector

7) Rear communication port C37.94, ST-connector

8) Front communication port Ethernet, RJ45 connector

9) Rear communication port 15-pole female micro D-sub, 1.27 mm (0.050") pitch

10) Rear communication port, terminal block

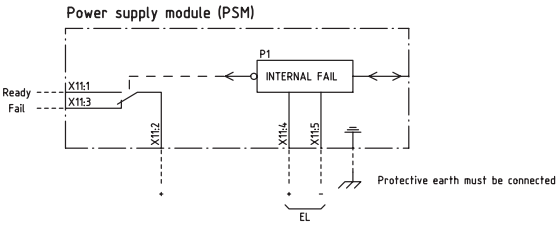

Figure 9. Power supply module (PSM)

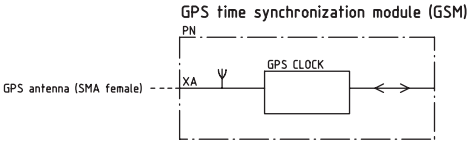

Type of CBM	PN=	XA=
1/2x19" casing with 1 TRM slot	P5	X51
3/4x19" casing with 1 TRM slot	P10	X101
3/4x19" casing with 2 TRM slots	P7	X71
1/1x19" casing with 1 TRM slot	P16	X161
1/1x19" casing with 2 TRM slots	P13	X131

Figure 10. GPS time synchronization module (GSM)

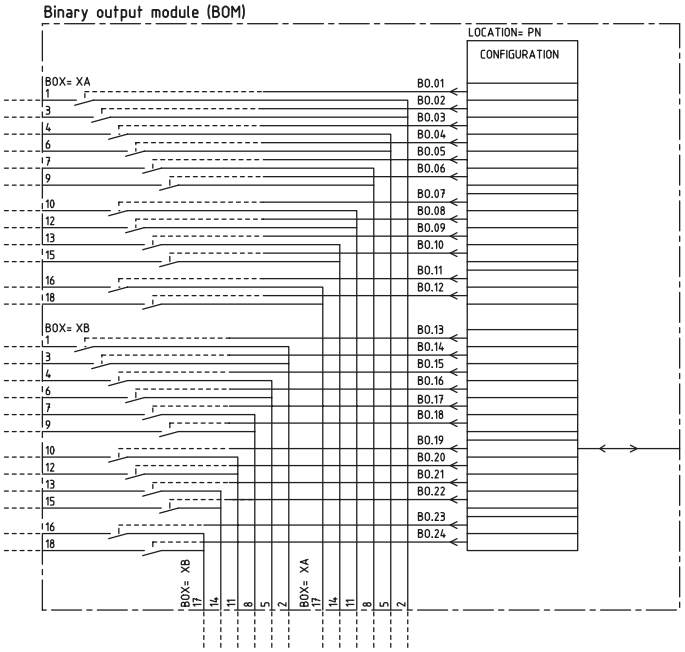

Figure 11. Binary output module (BOM). Output contacts named XA corresponds to rear position X31, X41, and so on, and output contacts named XB to rear position X32, X42, and so on.

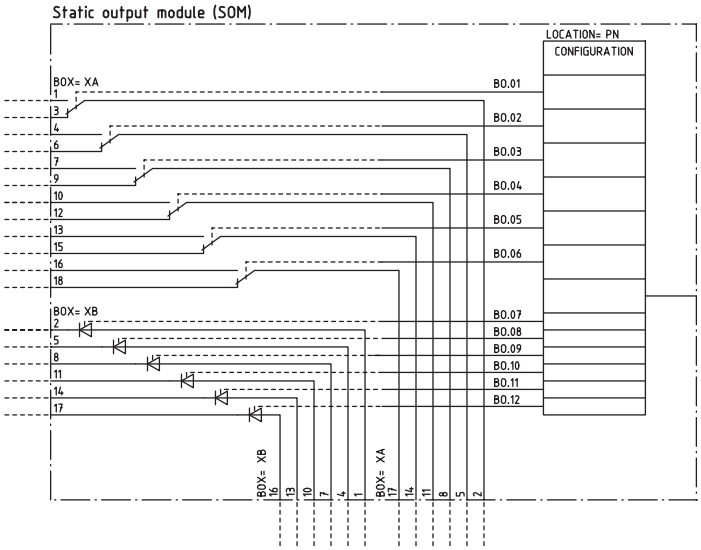

Figure 12. Static output module (SOM)

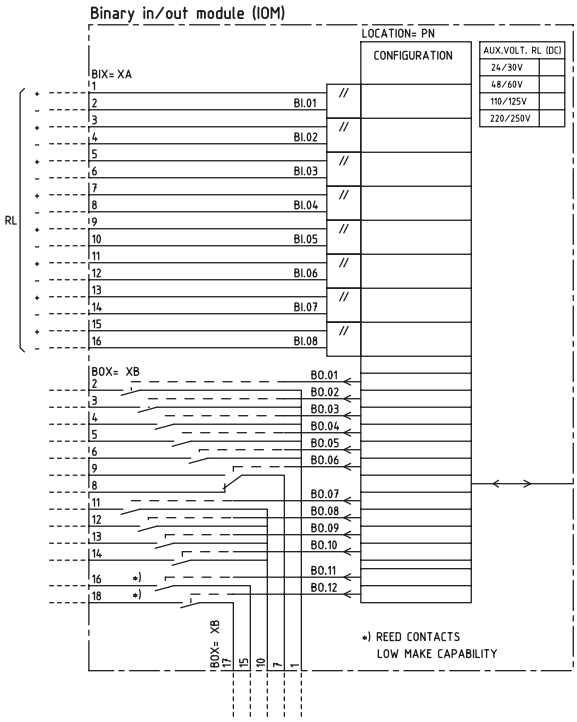

Figure 13. Binary in/out module (IOM). Input contacts named XA corresponds to rear position X31, X41, and so on, and output contacts named XB to rear position X32, X42, and so on.

5. Technical data

General

Definitions	
Reference value	The specified value of an influencing factor to which are referred the characteristics of the equipment
Nominal range	The range of values of an influencing quantity (factor) within which, under specified conditions, the equipment meets the specified requirements
Operative range	The range of values of a given energizing quantity for which the equipment, under specified conditions, is able to perform its intended functions according to the specified requirements

Energizing quantities, rated values and limits

Analog inputs

Table 6. TRM - Energizing quantities, rated values and limits

Quantity	Rated value	Nominal range
Current	I_r = 1 or 5 A	(0.2-40) × I_r
Operative range	(0-100) x I_r	
Permissive overload	4 × I_r cont. 100 × I_r for 1 s *)	
Burden	< 150 mVA at I_r = 5 A < 20 mVA at I_r = 1 A	
Ac voltage	U_r = 110 V	0.5–288 V
Operative range	(0–340) V	
Permissive overload	420 V cont. 450 V 10 s	
Burden	< 20 mVA at 110 V	
Frequency	f_r = 50/60 Hz	± 5%
*) max. 350 A for 1 s when COMBITEST test switch is included.		

Table 7. MIM - mA input module

Quantity:	Rated value:	Nominal range:
Input resistance	R_{in} = 194 Ohm	-
Input range	± 5, ± 10, ± 20mA 0-5, 0-10, 0-20, 4-20mA	-
Power consumption each mA-board each mA input	 ≤ 4 W ≤ 0.1 W	-

Table 8. OEM - Optical ethernet module

Quantity	Rated value
Number of channels	1 or 2
Standard	IEEE 802.3u 100BASE-FX
Type of fiber	62.5/125 µm multimode fibre
Wave length	1300 nm
Optical connector	Type ST
Communication speed	Fast Ethernet 100 MB

Auxiliary DC voltage

Table 9. PSM - Power supply module

Quantity	Rated value	Nominal range
Auxiliary dc voltage, EL (input)	EL = (24 - 60) V EL = (90 - 250) V	EL ± 20% EL ± 20%
Power consumption	50 W typically	-
Auxiliary DC power in-rush	< 5 A during 0.1 s	-

Binary inputs and outputs

Table 10. BIM - Binary input module

Quantity	Rated value	Nominal range
Binary inputs	16	-
DC voltage, RL	24/40 V 48/60 V 110/125 V 220/250 V	RL ± 20% RL ± 20% RL ± 20% RL ± 20%
Power consumption 24/40 V 48/60 V 110/125 V 220/250 V	 max. 0.05 W/input max. 0.1 W/input max. 0.2 W/input max. 0.4 W/input	-
Counter input frequency	10 pulses/s max	-
Oscillating signal discriminator	Blocking settable 1–40 Hz Release settable 1–30 Hz	

Table 11. BIM - Binary input module with enhanced pulse counting capabilities

Quantity	Rated value	Nominal range
Binary inputs	16	-
DC voltage, RL	24/40 V 48/60 V 110/125 V 220/250 V	RL ± 20% RL ± 20% RL ± 20% RL ± 20%
Power consumption 24/40 V 48/60 V 110/125 V 220/250 V	 max. 0.05 W/input max. 0.1 W/input max. 0.2 W/input max. 0.4 W/input	-
Counter input frequency	10 pulses/s max	-
Balanced counter input frequency	40 pulses/s max	-
Oscillating signal discriminator	Blocking settable 1–40 Hz Release settable 1–30 Hz	

Table 12. IOM - Binary input/output module

Quantity	Rated value	Nominal range
Binary inputs	8	-
DC voltage, RL	24/40 V 48/60 V 110/125 V 220/250 V	RL ± 20% RL ± 20% RL ± 20% RL ± 20%
Power consumption 24/40 V 48/60 V 110/125 V 220/250 V	 max. 0.05 W/input max. 0.1 W/input max. 0.2 W/input max. 0.4 W/input	-

Table 13. IOM - Binary input/output module contact data (reference standard: IEC 61810-2)

Function or quantity	Trip and signal relays	Fast signal relays (parallel reed relay)
Binary outputs	10	2
Max system voltage	250 V AC, DC	250 V AC, DC
Test voltage across open contact, 1 min	1000 V rms	800 V DC
Current carrying capacity Continuous 1 s	 8 A 10 A	 8 A 10 A
Making capacity at inductive load with L/R>10 ms 0.2 s 1.0 s	 30 A 10 A	 0.4 A 0.4 A
Breaking capacity for AC, cos φ > 0.4	250 V/8.0 A	250 V/8.0 A
Breaking capacity for DC with L/R < 40 ms	48 V/1 A 110 V/0.4 A 125 V/0.35 A 220 V/0.2 A 250 V/0.15 A	48 V/1 A 110 V/0.4 A 125 V/0.35 A 220 V/0.2 A 250 V/0.15 A
Maximum capacitive load	-	10 nF

Table 14. SOM - Static Output Module (reference standard: IEC 61810-2): Static binary outputs

Function of quantity	Static binary output trip	
Rated voltage	48 - 60 VDC	110 - 250 VDC
Number of outputs	6	6
Impedance open state	~300 kΩ	~810 kΩ
Test voltage across open contact, 1 min	No galvanic separation	No galvanic separation
Current carrying capacity: Continuous 1.0s	 5A 10A	 5A 10A
Making capacity at capacitive load with the maximum capacitance of 0.2 µF : 0.2s 1.0s	 30A 10A	 30A 10A
Breaking capacity for DC with L/R ≤ 40ms	48V / 1A 60V / 0,75A	110V / 0.4A 125V / 0.35A 220V / 0.2A 250V / 0.15A
Operating time	<1ms	<1ms

Table 15. SOM - Static Output module data (reference standard: IEC 61810-2): Electromechanical relay outputs

Function of quantity	Trip and signal relays
Max system voltage	250V AC/DC
Number of outputs	6
Test voltage across open contact, 1 min	1000V rms
Current carrying capacity: Continuous 1.0s	 8A 10A
Making capacity at capacitive load with the maximum capacitance of 0.2 µF: 0.2s 1.0s	 30A 10A
Breaking capacity for DC with L/R ≤ 40ms	48V / 1A 110V / 0.4A 125V / 0,35A 220V / 0,2A 250V / 0.15A

Table 16. BOM - Binary output module contact data (reference standard: IEC 61810-2)

Function or quantity	Trip and Signal relays
Binary outputs	24
Max system voltage	250 V AC, DC
Test voltage across open contact, 1 min	1000 V rms
Current carrying capacity Continuous 1 s	 8 A 10 A
Making capacity at inductive load with L/R>10 ms 0.2 s 1.0 s	 30 A 10 A
Breaking capacity for AC, cos φ>0.4	250 V/8.0 A
Breaking capacity for DC with L/R < 40 ms	48 V/1 A 110 V/0.4 A 125 V/0.35 A 220 V/0.2 A 250 V/0.15 A

Influencing factors

Table 17. Temperature and humidity influence

Parameter	Reference value	Nominal range	Influence
Ambient temperature, operate value	+20 °C	-10 °C to +55 °C	0.02% /°C
Relative humidity Operative range	10%-90% 0%-95%	10%-90%	-
Storage temperature	-40 °C to +70 °C	-	-

Table 18. Auxiliary DC supply voltage influence on functionality during operation

Dependence on	Reference value	Within nominal range	Influence
Ripple, in DC auxiliary voltage Operative range	max. 2% Full wave rectified	12% of EL	0.01% /%
Auxiliary voltage dependence, operate value		± 20% of EL	0.01% /%
Interrupted auxiliary DC voltage		24-60 V DC ± 20% 90-250 V DC ± 20%	
Interruption interval 0–50 ms			No restart
0–∞ s			Correct behaviour at power down
Restart time			<180 s

Table 19. Frequency influence (reference standard: IEC 60255–6)

Dependence on	Within nominal range	Influence
Frequency dependence, operate value	f_r ± 2.5 Hz for 50 Hz f_r ± 3.0 Hz for 60 Hz	± 1.0% / Hz
Harmonic frequency dependence (20% content)	2nd, 3rd and 5th harmonic of f_r	± 1.0%

Type tests according to standards

Table 20. Electromagnetic compatibility

Test	Type test values	Reference standards
1 MHz burst disturbance	2.5 kV	IEC 60255-22-1, Class III
Ring wave immunity test	2-4 kV	IEC 61000-4-12, Class III
Surge withstand capability test	2.5 kV, oscillatory 4.0 kV, fast transient	IEEE/ANSI C37.90.1
Electrostatic discharge Direct application Indirect application	15 kV air discharge 8 kV contact discharge 8 kV contact discharge	IEC 60255-22-2, Class IV IEC 61000-4-2, Class IV
Electrostatic discharge Direct application Indirect application	15 kV air discharge 8 kV contact discharge 8 kV contact discharge	IEEE/ANSI C37.90.1
Fast transient disturbance	4 kV	IEC 60255-22-4, Class A
Surge immunity test	1-2 kV, 1.2/50 µs high energy	IEC 60255-22-5
Power frequency immunity test	150-300 V, 50 Hz	IEC 60255-22-7, Class A
Conducted common mode immunity test	15 Hz-150 kHz	IEC 61000-4-16, Class IV
Power frequency magnetic field test	1000 A/m, 3 s	IEC 61000-4-8, Class V
Damped oscillatory magnetic field test	100 A/m	IEC 61000-4-10, Class V
Radiated electromagnetic field disturbance	20 V/m, 80-1000 MHz	IEC 60255-22-3
Radiated electromagnetic field disturbance	20 V/m, 80-2500 MHz	EN 61000-4-3
Radiated electromagnetic field disturbance	35 V/m 26-1000 MHz	IEEE/ANSI C37.90.2
Conducted electromagnetic field disturbance	10 V, 0.15-80 MHz	IEC 60255-22-6
Radiated emission	30-1000 MHz	IEC 60255-25
Conducted emission	0.15-30 MHz	IEC 60255-25

Table 21. Insulation

Test	Type test values	Reference standard
Dielectric test	2.0 kV AC, 1 min.	IEC 60255-5
Impulse voltage test	5 kV, 1.2/50 µs, 0.5 J	
Insulation resistance	>100 MΩ at 500 VDC	

Table 22. Environmental tests

Test	Type test value	Reference standard
Cold test	Test Ad for 16 h at -25°C	IEC 60068-2-1
Storage test	Test Ad for 16 h at -40°C	IEC 60068-2-1
Dry heat test	Test Bd for 16 h at +70°C	IEC 60068-2-2
Damp heat test, steady state	Test Ca for 4 days at +40 °C and humidity 93%	IEC 60068-2-78
Damp heat test, cyclic	Test Db for 6 cycles at +25 to +55 °C and humidity 93 to 95% (1 cycle = 24 hours)	IEC 60068-2-30

Table 23. CE compliance

Test	According to
Immunity	EN 50263
Emissivity	EN 50263
Low voltage directive	EN 50178

Table 24. Mechanical tests

Test	Type test values	Reference standards
Vibration response test	Class II	IEC 60255-21-1
Vibration endurance test	Class I	IEC 60255-21-1
Shock response test	Class II	IEC 60255-21-2
Shock withstand test	Class I	IEC 60255-21-2
Bump test	Class I	IEC 60255-21-2
Seismic test	Class II	IEC 60255-21-3

Differential protection

Table 25. High impedance differential protection (PDIF, 87)

Function	Range or value	Accuracy
Operate voltage	(20-400) V	± 1.0% of U_r for $U < U_r$ ± 1.0% of U for $U > U_r$
Reset ratio	>95%	-
Maximum continuous voltage	U>TripPickup^2/series resistor ≤200 W	-
Operate time	10 ms typically at 0 to 10 x U_d	-
Reset time	90 ms typically at 10 to 0 x U_d	-
Critical impulse time	2 ms typically at 0 to 10 x U_d	-

Current protection

Table 26. Instantaneous phase overcurrent protection PHPIOC

Function	Range or value	Accuracy
Operate current	(1-2500)% of lBase	± 1.0% of I_r at $I \leq I_r$ ± 1.0% of I at $I > I_r$
Reset ratio	> 95%	-
Operate time	25 ms typically at 0 to 2 x I_{set}	-
Reset time	25 ms typically at 2 to 0 x I_{set}	-
Critical impulse time	10 ms typically at 0 to 2 x I_{set}	-
Operate time	10 ms typically at 0 to 10 x I_{set}	-
Reset time	35 ms typically at 10 to 0 x I_{set}	-
Critical impulse time	2 ms typically at 0 to 10 x I_{set}	-
Dynamic overreach	< 5% at τ = 100 ms	-

Table 27. Four step phase overcurrent protection OC4PTOC

Function	Setting range	Accuracy
Operate current	(1-2500)% of *lBase*	± 1.0% of I_r at $I \leq I_r$ ± 1.0% of I at $I > I_r$
Reset ratio	> 95%	-
Min. operating current	(1-100)% of *lBase*	± 1.0% of I_r
Relay characteristic angle (RCA)	(-70.0– -50.0) degrees	± 2.0 degrees
Maximum forward angle	(40.0–70.0) degrees	± 2.0 degrees
Minimum forward angle	(75.0–90.0) degrees	± 2.0 degrees
2nd harmonic blocking	(5–100)% of fundamental	± 2.0% of I_r
Independent time delay	(0.000-60.000) s	± 0.5% ± 10 ms
Minimum operate time	(0.000-60.000) s	± 0.5% ± 10 ms
Inverse characteristics, see table 90, table 91 and table 92	19 curve types	See table 90, table 91 and table 92
Operate time, start function	25 ms typically at 0 to 2 x I_{set}	-
Reset time, start function	25 ms typically at 2 to 0 x I_{set}	-
Critical impulse time	10 ms typically at 0 to 2 x I_{set}	-
Impulse margin time	15 ms typically	-

Table 28. Instantaneous residual overcurrent protection EFPIOC

Function	Range or value	Accuracy
Operate current	(1-2500)% of lBase	± 1.0% of I_r at $I \leq I_r$ ± 1.0% of I at $I > I_r$
Reset ratio	> 95%	-
Operate time	25 ms typically at 0 to 2 x I_{set}	-
Reset time	25 ms typically at 2 to 0 x I_{set}	-
Critical impulse time	10 ms typically at 0 to 2 x I_{set}	-
Operate time	10 ms typically at 0 to 10 x I_{set}	-
Reset time	35 ms typically at 10 to 0 x I_{set}	-
Critical impulse time	2 ms typically at 0 to 10 x I_{set}	-
Dynamic overreach	< 5% at τ = 100 ms	-

Table 29. Four step residual overcurrent protection EF4PTOC

Function	Range or value	Accuracy
Operate current	(1-2500)% of *lBase*	± 1.0% of I_r at $I \leq I_r$ ± 1.0% of I at $I > I_r$
Reset ratio	> 95%	-
Operate current for directional comparison	(1–100)% of *lBase*	± 1.0% of I_r
Timers	(0.000-60.000) s	± 0.5% ± 10 ms
Inverse characteristics, see table 90, table 91 and table 92	18 curve types	See table 90, table 91 and table 92
Second harmonic restrain operation	(5–100)% of fundamental	± 2.0% of I_r
Relay characteristic angle	(-180 to 180) degrees	± 2.0 degrees
Minimum polarizing voltage	(1–100)% of *UBase*	± 0.5% of U_r
Minimum polarizing current	(1-30)% of *IBase*	±0.25% of I_r
Real part of source Z used for current polarization	(0.50-1000.00) Ω/phase	-
Imaginary part of source Z used for current polarization	(0.50–3000.00) Ω/phase	-
Operate time, start function	25 ms typically at 0 to 2 x I_{set}	-
Reset time, start function	25 ms typically at 2 to 0 x I_{set}	-
Critical impulse time	10 ms typically at 0 to 2 x I_{set}	-
Impulse margin time	15 ms typically	-

Table 30. Sensitive directional residual overcurrent and power protection SDEPSDE

Function	Range or value	Accuracy
Operate level for $3I_0 \cdot \cos\varphi$ directional residual overcurrent	(0.25-200.00)% of *IBase* At low setting: (2.5-10) mA (10-50) mA	± 1.0% of I_r at $I \leq I_r$ ± 1.0% of I at $I > I_r$ ±1.0 mA ±0.5 mA
Operate level for $3I_0 \cdot 3U_0 \cdot \cos\varphi$ directional residual power	(0.25-200.00)% of *SBase* At low setting: (0.25-5.00)% of *SBase*	± 1.0% of S_r at $S \leq S_r$ ± 1.0% of S at $S > S_r$ ± 10% of set value
Operate level for $3I_0$ and φ residual overcurrent	(0.25-200.00)% of *IBase* At low setting: (2.5-10) mA (10-50) mA	± 1.0% of I_r at $\leq I_r$ ± 1.0% of I at $I > I_r$ ±1.0 mA ±0.5 mA
Operate level for non directional overcurrent	(1.00-400.00)% of *IBase* At low setting: (10-50) mA	± 1.0% of I_r at $I \leq I_r$ ± 1.0% of I at $I > I_r$ ± 1.0 mA
Operate level for non directional residual overvoltage	(1.00-200.00)% of *UBase*	± 0.5% of U_r at $U \leq U_r$ ± 0.5% of U at $U > U_r$
Residual release current for all directional modes	(0.25-200.00)% of *IBase* At low setting: (2.5-10) mA (10-50) mA	± 1.0% of I_r at $I \leq I_r$ ± 1.0% of I at $I > I_r$ ±1.0 mA ± 0.5 mA
Residual release voltage for all directional modes	(0.01-200.00)% of *UBase*	± 0.5% of U_r at $U \leq U_r$ ± 0.5% of U at $U > U_r$
Reset ratio	> 95%	-
Timers	(0.000-60.000) s	± 0.5% ± 10 ms
Inverse characteristics, see table 90, table 91 and table 92	19 curve types	See table 90, table 91 and table 92
Relay characteristic angle RCA	(-179 to 180) degrees	± 2.0 degrees
Relay open angle ROA	(0-90) degrees	± 2.0 degrees

Table 30. Sensitive directional residual overcurrent and power protection SDEPSDE , continued

Function	Range or value	Accuracy
Operate time, non directional residual over current	60 ms typically at 0 to 2 x I_{set}	-
Reset time, non directional residual over current	60 ms typically at 2 to 0 x I_{set}	-
Operate time, start function	150 ms typically at 0 to 2 x I_{set}	-
Reset time, start function	50 ms typically at 2 to 0 x I_{set}	-

Table 31. Thermal overload protection, one time constant LPTTR

Function	Range or value	Accuracy
Reference current	(0-400)% of *IBase*	± 1.0% of I_r
Start temperature reference	(0-400)°C	± 1.0°C
Operate time: $t = \tau \cdot \ln\left(\frac{I^2 - I_p^2}{I^2 - I_b^2}\right)$ (Equation 1) I = actual measured current I_p = load current before overload occurs I_b = base current, IBase	Time constant τ = (0–1000) minutes	IEC 60255-8, class 5 + 200 ms
Alarm temperature	(0-200)°C	± 2.0% of heat content trip
Trip temperature	(0-400)°C	± 2.0% of heat content trip
Reset level temperature	(0-400)°C	± 2.0% of heat content trip

Table 32. Thermal overload protection, two time constants TRPTTR

Function	Range or value	Accuracy
Base current 1 and 2	(30–250)% of IBase	± 1.0% of I_r
Operate time: $t = \tau \cdot \ln\left(\frac{I^2 - I_p^2}{I^2 - I_b^2}\right)$ (Equation 2) $I = I_{measured}$	I_p = load current before overload occurs Time constant τ = (1–500) minutes	IEC 60255–8, class 5 + 200 ms
Alarm level 1 and 2	(50–99)% of heat content trip value	± 2.0% of heat content trip
Operate current	(50–250)% of IBase	± 1.0% of I_r
Reset level temperature	(10–95)% of heat content trip	± 2.0% of heat content trip

Table 33. Breaker failure protection CCRBRF

Function	Range or value	Accuracy
Operate phase current	(5-200)% of lBase	± 1.0% of I_r at $I \le I_r$ ± 1.0% of I at $I > I_r$
Reset ratio, phase current	> 95%	-
Operate residual current	(2-200)% of lBase	± 1.0% of I_r at $I \le I_r$ ± 1.0% of I at $I > I_r$
Reset ratio, residual current	> 95%	-
Phase current level for blocking of contact function	(5-200)% of lBase	± 1.0% of I_r at $I \le I_r$ ± 1.0% of I at $I > I_r$
Reset ratio	> 95%	-
Timers	(0.000-60.000) s	± 0.5% ± 10 ms
Operate time for current detection	10 ms typically	-
Reset time for current detection	15 ms maximum	-

Table 34. Stub protection STBPTOC

Function	Range or value	Accuracy
Operating current	(1-2500)% of *IBase*	± 1.0% of I_r at $I \leq I_r$ ± 1.0% of I at $I > I_r$
Reset ratio	> 95%	-
Definite time	(0.000-60.000) s	± 0.5% ± 10 ms
Operating time, start function	25 ms typically at 0 to 2 x I_{set}	-
Resetting time, startfunction	25 ms typically at 2 to 0 x I_{set}	-
Critical impulse time	10 ms typically at 0 to 2 x I_{set}	-
Impulse margin time	15 ms typically	-

Table 35. Pole discordance protection CCRPLD

Function	Range or value	Accuracy
Operate current	(0–100)% of IBase	± 1.0% of I_r
Time delay	(0.000-60.000) s	± 0.5% ± 10 ms

Table 36. Directional underpower protection GUPPDUP

Function	Range or value	Accuracy
Power level	(0.0–500.0)% of Sbase At low setting: (0.5-2.0)% of Sbase (2.0-10)% of Sbase	± 1.0% of S_r at $S < S_r$ ± 1.0% of S at $S > S_r$ < ±50% of set value < ± 20% of set value
Characteristic angle	(-180.0–180.0) degrees	2 degrees
Timers	(0.00-6000.00) s	± 0.5% ± 10 ms

Table 37. Directional overpower protection GOPPDOP

Function	Range or value	Accuracy
Power level	(0.0–500.0)% of S_{base} At low setting: (0.5-2.0)% of S_{base} (2.0-10)% of S_{base}	± 1.0% of S_r at $S < S_r$ ± 1.0% of S at $S > S_r$ < ± 50% of set value < ± 20% of set value
Characteristic angle	(-180.0–180.0) degrees	2 degrees
Timers	(0.00-6000.00) s	± 0.5% ± 10 ms

Table 38. Broken conductor check BRCPTOC

Function	Range or value	Accuracy
Minimum phase current for operation	(5–100)% of IBase	± 0.1% of I_r
Unbalance current operation	(0–100)% of maximum current	± 0.1% of I_r
Timer	(0.00-6000.00) s	± 0.5% ± 10 ms

Voltage protection

Table 39. Two step undervoltage protection UV2PTUV

Function	Range or value	Accuracy
Operate voltage, low and high step	(1–100)% of *UBase*	± 1.0% of U_r
Absolute hysteresis	(0–100)% of *UBase*	± 1.0% of U_r
Internal blocking level, low and high step	(1–100)% of *UBase*	± 1.0% of U_r
Inverse time characteristics for low and high step, see table 93	-	See table 93
Definite time delays	(0.000-60.000) s	± 0.5% ±10 ms
Minimum operate time, inverse characteristics	(0.000–60.000) s	± 0.5% ± 10 ms
Operate time, start function	25 ms typically at 2 to 0.5 x U_{set}	-
Reset time, start function	25 ms typically at 0 to 2 x U_{set}	-
Critical impulse time	10 ms typically at 2 to 0 x U_{set}	-
Impulse margin time	15 ms typically	-

Table 40. Two step overvoltage protection OV2PTOV

Function	Range or value	Accuracy
Operate voltage, low and high step	(1-200)% of Ubase	± 1.0% of U_r at $U < U_r$ ± 1.0% of U at $U > U_r$
Absolute hysteresis	(0–100)% of U_{base}	± 1.0% of U_r at $U < U_r$ ± 1.0% of U at $U > U_r$
Inverse time characteristics for low and high step, see table 94	-	See table 94
Definite time delays	(0.000-60.000) s	± 0.5% ± 10 ms
Minimum operate time, Inverse characteristics	(0.000-60.000) s	± 0.5% ± 10 ms
Operate time, start function	25 ms typically at 0 to 2 x U_{set}	-
Reset time, start function	25 ms typically at 2 to 0 x U_{set}	-
Critical impulse time	10 ms typically at 0 to 2 x U_{set}	-
Impulse margin time	15 ms typically	-

Table 41. Two step residual overvoltage protection ROV2PTOV

Function	Range or value	Accuracy
Operate voltage, low and high step	(1-200)% of Ubase	± 1.0% of U_r at $U < U_r$ ± 1.0% of U at $U > U_r$
Absolute hysteresis	(0–100)% of Ubase	± 1.0% of U_r at $U < U_r$ ± 1.0% of U at $U > U_r$
Inverse time characteristics for low and high step, see table 95	-	See table 95
Definite time setting	(0.000–60.000) s	± 0.5% ± 10 ms
Minimum operate time	(0.000-60.000) s	± 0.5% ± 10 ms
Operate time, start function	25 ms typically at 0 to 2 x U_{set}	-
Reset time, start function	25 ms typically at 2 to 0 x U_{set}	-
Critical impulse time	10 ms typically at 0 to 2 x U_{set}	-
Impulse margin time	15 ms typically	-

Table 42. Voltage differential protection (PTOV)

Function	Range or value	Accuracy
Voltage difference for alarm and trip	(0.0–100.0) % of U_{base}	± 0.5 % of U_r
Under voltage level	(0.0–100.0) % of U_{base}	± 0.5% of U_r
Timers	(0.000–60.000)s	± 0.5% ± 10 ms

Table 43. Loss of voltage check LOVPTUV

Function	Range or value	Accuracy
Operate voltage	(0–100)% of Ubase	± 0.5% of U_r
Pulse timer	(0.050–60.000) s	± 0.5% ± 10 ms
Timers	(0.000–60.000) s	± 0.5% ± 10 ms

Frequency protection

Table 44. Underfrequency protection SAPTUF

Function	Range or value	Accuracy
Operate value, start function	(35.00-75.00) Hz	± 2.0 mHz
Operate time, start function	100 ms typically	-
Reset time, start function	100 ms typically	-
Operate time, definite time function	(0.000-60.000)s	± 0.5% ± 10 ms
Reset time, definite time function	(0.000-60.000)s	± 0.5% ± 10 ms
Voltage dependent time delay $t = \left[\frac{U - UMin}{UNom - UMin}\right]^{Exponent} \cdot (tMax - tMin) + tMin$ (Equation 3) $U=U_{measured}$	Settings: UNom=(50-150)% of U_{base} UMin=(50-150)% of U_{base} Exponent=0.0-5.0 tMax=(0.000-60.000)s tMin=(0.000-60.000)s	Class 5 + 200 ms

Table 45. Overfrequency protection SAPTOF

Function	Range or value	Accuracy
Operate value, start function	(35.00-75.00) Hz	± 2.0 mHz at symmetrical three-phase voltage
Operate time, start function	100 ms typically	-
Reset time, start function	100 ms typically	-
Operate time, definite time function	(0.000-60.000)s	± 0.5% ± 10 ms
Reset time, definite time function	(0.000-60.000)s	± 0.5% ± 10 ms

Table 46. Rate-of-change frequency protection SAPFRC

Function	Range or value	Accuracy
Operate value, start function	(-10.00-10.00) Hz/s	± 10.0 mHz/s
Operate value, internal blocking level	(0-100)% of U_{base}	± 1.0% of U_r
Operate time, start function	100 ms typically	-

Multipurpose protection

Table 47. General current and voltage protection (GAPC)

Function	Range or value	Accuracy
Measuring current input	phase1, phase2, phase3, PosSeq, NegSeq, 3*ZeroSeq, MaxPh, MinPh, UnbalancePh, phase1-phase2, phase2-phase3, phase3-phase1, MaxPh-Ph, MinPh-Ph, UnbalancePh-Ph	-
Base current	(1 - 99999) A	-
Measuring voltage input	phase1, phase2, phase3, PosSeq, -NegSeq, -3*ZeroSeq, MaxPh, MinPh, UnbalancePh, phase1-phase2, phase2-phase3, phase3-phase1, MaxPh-Ph, MinPh-Ph, UnbalancePh-Ph	-
Base voltage	(0.05 - 2000.00) kV	-
Start overcurrent, step 1 and 2	(2 - 5000)% of I_{base}	± 1.0% of I_r for $I<I_r$ ± 1.0% of I for $I>I_r$
Start undercurrent, step 1 and 2	(2 - 150)% of I_{base}	± 1.0% of I_r for $I<I_r$ ± 1.0% of I for $I>I_r$
Definite time delay	(0.00 - 6000.00) s	± 0.5% ± 10 ms
Operate time start overcurrent	25 ms typically at 0 to 2 x I_{set}	-
Reset time start overcurrent	25 ms typically at 2 to 0 x I_{set}	-
Operate time start undercurrent	25 ms typically at 2 to 0 x I_{set}	-
Reset time start undercurrent	25 ms typically at 0 to 2 x I_{set}	-
See table 90 and table 91	Parameter ranges for customer defined characteristic no 17: k: 0.05 - 999.00 A: 0.0000 - 999.0000 B: 0.0000 - 99.0000 C: 0.0000 - 1.0000 P: 0.0001 - 10.0000 PR: 0.005 - 3.000 TR: 0.005 - 600.000 CR: 0.1 - 10.0	See table 90 and table 91

Table 47. General current and voltage protection (GAPC), continued

Function	Range or value	Accuracy
Voltage level where voltage memory takes over	(0.0 - 5.0)% of U_{base}	± 1.0% of U_r
Start overvoltage, step 1 and 2	(2.0 - 200.0)% of U_{base}	± 1.0% of U_r for $U<U_r$ ± 1.0% of U for $U>U_r$
Start undervoltage, step 1 and 2	(2.0 - 150.0)% of U_{base}	± 1.0% of U_r for $U<U_r$ ± 1.0% of U for $U>U_r$
Operate time, start overvoltage	25 ms typically at 0 to 2 x U_{set}	-
Reset time, start overvoltage	25 ms typically at 2 to 0 x U_{set}	-
Operate time start undervoltage	25 ms typically 2 to 0 x U_{set}	-
Reset time start undervoltage	25 ms typically at 0 to 2 x U_{set}	-
High and low voltage limit, voltage dependent operation	(1.0 - 200.0)% of U_{base}	± 1.0% of U_r for $U<U_r$ ± 1.0% of U for $U>U_r$
Directional function	Settable: NonDir, forward and reverse	-
Relay characteristic angle	(-180 to +180) degrees	± 2.0 degrees
Relay operate angle	(1 to 90) degrees	± 2.0 degrees
Reset ratio, overcurrent	> 95%	-
Reset ratio, undercurrent	< 105%	-
Reset ratio, overvoltage	> 95%	-
Reset ratio, undervoltage	< 105%	-
Overcurrent: Critical impulse time Impulse margin time	 10 ms typically at 0 to 2 x I_{set} 15 ms typically	 - -
Undercurrent: Critical impulse time Impulse margin time	 10 ms typically at 2 to 0 x I_{set} 15 ms typically	 - -
Overvoltage: Critical impulse time Impulse margin time	 10 ms typically at 0 to 2 x U_{set} 15 ms typically	 - -

Table 47. General current and voltage protection (GAPC), continued

Function	Range or value	Accuracy
Undervoltage:		
Critical impulse time	10 ms typically at 2 to 0 x U_{set}	-
Impulse margin time	15 ms typically	-

Secondary system supervision

Table 48. Current circuit supervision CCSRDIF

Function	Range or value	Accuracy
Operate current	(5-200)% of I_r	± 10.0% of I_r at $I \leq I_r$ ± 10.0% of I at $I > I_r$
Block current	(5-500)% of I_r	± 5.0% of I_r at $I \leq I_r$ ± 5.0% of I at $I > I_r$

Table 49. Fuse failure supervision SDDRFUF

Function	Range or value	Accuracy
Operate voltage, zero sequence	(1-100)% of UBase	± 1.0% of U_r
Operate current, zero sequence	(1–100)% of IBase	± 1.0% of I_r
Operate voltage, negative sequence	(1–100)% of UBase	± 1.0% of U_r
Operate current, negative sequence	(1–100)% of IBase	± 1.0% of I_r
Operate voltage change level	(1–100)% of UBase	± 5.0% of U_r
Operate current change level	(1–100)% of IBase	± 5.0% of I_r

Control

Table 50. Synchronizing, synchrocheck and energizing check SESRSYN

Function	Range or value	Accuracy
Phase shift, φ_{line} - φ_{bus}	(-180 to 180) degrees	-
Voltage ratio, U_{bus}/U_{line}	(0.40-25.000) % of *UBase*	-
Voltage high limit for synchronizing and synchrocheck	(50.0-120.0)% of *UBase*	± 1.0% of U_r at $U \leq U_r$ ± 1.0% of U at $U > U_r$
Reset ratio, synchrocheck	> 95%	-
Frequency difference limit between bus and line	(0.003-1.000) Hz	± 2.0 mHz
Phase angle difference limit between bus and line	(5.0-90.0) degrees	± 2.0 degrees
Voltage difference limit between bus and line	(2.0-50.0)% of *UBase*	± 1.0% of U_r
Time delay output for synchrocheck	(0.000-60.000) s	± 0.5% ± 10 ms
Voltage high limit for energizing check	(50.0-120.0)% of *UBase*	± 1.0% of U_r at $U \leq U_r$ ± 1.0% of U at $U > U_r$
Reset ratio, voltage high limit	> 95%	-
Voltage low limit for energizing check	(10.0-80.0)% of *UBase*	± 1.0% of U_r
Reset ratio, voltage low limit	< 105%	-
Maximum voltage for energizing	(50.0-180.0)% of *UBase*	± 1.0% of U_r at $U \leq U_r$ ± 1.0% of U at $U > U_r$
Time delay for energizing check	(0.000-60.000) s	± 0.5% ± 10 ms
Operate time for synchrocheck function	160 ms typically	-
Operate time for energizing function	80 ms typically	-

Table 51. Autorecloser SMBRREC

Function	Range or value	Accuracy
Number of autoreclosing shots	1 - 5	-
Number of autoreclosing programs	8	-
Autoreclosing open time: shot 1 - t1 1Ph shot 1 - t1 2Ph shot 1 - t1 3PhHS shot 1 - t1 3PhDld	(0.000-60.000) s	± 0.5% ± 10 ms
shot 2 - t2 shot 3 - t3 shot 4 - t4 shot 5 - t5	(0.00-6000.00) s	
Extended autorecloser open time	(0.000-60.000) s	
Autorecloser maximum wait time for sync	(0.00-6000.00) s	
Maximum trip pulse duration	(0.000-60.000) s	
Inhibit reset time	(0.000-60.000) s	
Reclaim time	(0.00-6000.00) s	
Minimum time CB must be closed before AR becomes ready for autoreclosing cycle	(0.00-6000.00) s	
Circuit breaker closing pulse length	(0.000-60.000) s	
CB check time before unsuccessful	(0.00-6000.00) s	
Wait for master release	(0.00-6000.00) s	
Wait time after close command before proceeding to next shot	(0.000-60.000) s	

Table 52. Voltage control TR1ATCC, TR8ATCC, TCMYLTC and TLCYLTC

Function	Range or value	Accuracy
Transformer reactance	(0.1–200.0)Ω, primary	-
Time delay for lower command when fast step down mode is activated	(1.0–100.0) s	-
Voltage control set voltage	(85.0–120.0)% of UB	±0.25% of U_r
Outer voltage deadband	(0.2–9.0)% of UB	-
Inner voltage deadband	(0.1–9.0)% of UB	-
Upper limit of busbar voltage	(80–180)% of UB	± 1.0% of U_r
Lower limit of busbar voltage	(70–120)% of UB	± 1.0% of U_r
Undervoltage block level	(0–120)% of UB	± 1.0% of U_r
Time delay (long) for automatic control commands	(3–1000) s	± 0.5% ± 10 ms
Time delay (short) for automatic control commands	(1–1000) s	± 0.5% ± 10 ms
Minimum operating time in inverse mode	(3–120) s	± 0.5% ± 10 ms
Line resistance	(0.00–150.00)Ω, primary	-
Line resistance	(-150.00–150.00)Ω, primary	-
Load voltage adjustment constants	(-20.0–20.0)% of UB	-
Load voltage auto correction	(-20.0–20.0)% of UB	-
Duration time for the reverse action block signal	(30–6000) s	± 0.5% ± 10 ms
Current limit for reverse action block	(0–100)% of I1Base	-
Overcurrent block level	(0–250)% of I1Base	± 1.0% of I_r at $I \leq I_r$ ± 1.0% of I at $I > I_r$
Level for number of counted raise/ lower within one hour	(0–30) operations/hour	-
Level for number of counted raise/ lower within 24 hours	(0–100) operations/day	-
Time window for hunting alarm	(1–120) minutes	-
Hunting detection alarm, max operations/window	(3–30) operations/window	-

Table 52. Voltage control TR1ATCC, TR8ATCC, TCMYLTC and TLCYLTC, continued

Function	Range or value	Accuracy
Alarm level of active power in forward and reverse direction	(-9999.99–9999.99) MW	± 1.0% of S_r
Alarm level of reactive power in forward and reverse direction	(-9999.99–9999.99) MVAr	± 1.0% of S_r
Time delay for alarms from power supervision	(1–6000) s	± 0.5% ± 10 ms
Tap position for lowest and highest voltage	(1–63)	-
mA for lowest and highest voltage tap position	(0.000–25.000) mA	-
Type of code conversion	BIN, BCD, GRAY, SINGLE, mA	-
Time after position change before the value is accepted	(1–60) s	± 0.5% ± 10 ms
Tap changer constant time-out	(1–120) s	± 0.5% ± 10 ms
Raise/lower command output pulse duration	(0.5–10.0) s	± 0.5% ± 10 ms

Scheme communication

Table 53. Scheme communication logic for distance or overcurrent protection ZCPSCH

Function	Range or value	Accuracy
Scheme type	Intertrip Permissive Underreach Permissive Overreach Blocking	-
Co-ordination time for blocking communication scheme	(0.000-60.000) s	± 0.5% ± 10 ms
Minimum duration of a send signal	(0.000-60.000) s	± 0.5% ± 10 ms
Security timer for loss of guard signal detection	(0.000-60.000) s	± 0.5% ± 10 ms
Operation mode of unblocking logic	Off NoRestart Restart	-

Table 54. Current reversal and weak-end infeed logic for distance protection ZCRWPSCH

Function	Range or value	Accuracy
Detection level phase-to-neutral voltage	(10-90)% of UBase	± 1.0% of U_r
Detection level phase-to-phase voltage	(10-90)% of UBase	± 1.0% of Ur
Reset ratio	<105%	-
Operate time for current reversal logic	(0.000-60.000) s	± 0.5% ± 10 ms
Delay time for current reversal	(0.000-60.000) s	± 0.5% ± 10 ms
Coordination time for weak-end infeed logic	(0.000-60.000) s	± 0.5% ± 10 ms

Table 55. Scheme communication logic for residual overcurrent protection ECPSCH

Function	Range or value	Accuracy
Scheme type	Permissive Underreaching Permissive Overreaching Blocking	-
Communication scheme coordination time	(0.000-60.000) s	± 0.5% ± 10 ms

Table 56. Current reversal and weak-end infeed logic for residual overcurrent protection ECRWPSCH

Function	Range or value	Accuracy
Operating mode of WEI logic	Off Echo Echo & Trip	-
Operate voltage $3U_o$ for WEI trip	(5-70)% of UBase	± 1.0% of U_r
Reset ratio	>95%	-
Operate time for current reversal logic	(0.000-60.000) s	± 0.5% ± 10 ms
Delay time for current reversal	(0.000-60.000) s	± 0.5% ± 10 ms
Coordination time for weak-end infeed logic	(0.000–60.000) s	± 0.5% ± 10 ms

Logic

Table 57. Tripping logic SMPPTRC

Function	Range or value	Accuracy
Trip action	3-ph, 1/3-ph, 1/2/3-ph	-
Minimum trip pulse length	(0.000-60.000) s	± 0.5% ± 10 ms
Timers	(0.000-60.000) s	± 0.5% ± 10 ms

Table 58. Configurable logic blocks

Logic block	Quantity with cycle time			Range or value	Accuracy
	fast	medium	normal		
LogicAND	60	60	160	-	-
LogicOR	60	60	160	-	-
LogicXOR	10	10	20	-	-
LogicInverter	30	30	80	-	-
LogicSRMemory	10	10	20	-	-
LogicGate	10	10	20	-	-
LogicTimer	10	10	20	(0.000–90000.000) s	± 0.5% ± 10 ms
LogicPulseTimer	10	10	20	(0.000–90000.000) s	± 0.5% ± 10 ms
LogicTimerSet	10	10	20	(0.000–90000.000) s	± 0.5% ± 10 ms
LogicLoopDelay	10	10	20	(0.000–90000.000) s	± 0.5% ± 10 ms

Table 59. Extension logic package

Logic block	Quantity with update rate			Range or value	Accuracy
	fast	medium	normal		
LogicAND	40	40	100	-	-
LogicXOR	-	-	49	-	-
LogicSRMemory	-	-	49	-	-
LogicTimer	-	-	49	(0.000–90000.000) s	± 0.5% ± 10 ms
LogicPulseTimer	-	-	49	(0.000–90000.000) s	± 0.5% ± 10 ms
Trip matrix logic	-	-	12	-	-

Monitoring

Table 60. Measurements CVMMXN

Function	Range or value	Accuracy
Frequency	(0.95-1.05) × f_r	± 2.0 mHz
Voltage	(0.1-1.5) ×U_r	± 0.5% of U_r at U≤U_r ± 0.5% of U at U > U_r
Connected current	(0.2-4.0) × I_r	± 0.5% of I_r at I ≤ I_r ± 0.5% of I at I > I_r
Active power, P	0.1 x U_r< U < 1.5 x U_r 0.2 x I_r < I < 4.0 x I_r	± 1.0% of S_r at S ≤ S_r ± 1.0% of S at S > S_r
Reactive power, Q	0.1 x U_r< U < 1.5 x U_r 0.2 x I_r < I < 4.0 x I_r	± 1.0% of S_r at S ≤ S_r ± 1.0% of S at S > S_r
Apparent power, S	0.1 x U_r < U < 1.5 x U_r 0.2 x I_r< I < 4.0 x I_r	± 1.0% of S_r at S ≤ S_r ± 1.0% of S at S > S_r
Power factor, cos (φ)	0.1 x U_r < U < 1.5 x U_r 0.2 x I_r< I < 4.0 x I_r	± 0.02

Table 61. Supervision of mA input signals (MVGGIO)

Function	Range or value	Accuracy
mA measuring function	± 5, ± 10, ± 20 mA 0-5, 0-10, 0-20, 4-20 mA	± 0.1 % of set value ± 0.005 mA
Max current of transducer to input	(-20.00 to +20.00) mA	
Min current of transducer to input	(-20.00 to +20.00) mA	
Alarm level for input	(-20.00 to +20.00) mA	
Warning level for input	(-20.00 to +20.00) mA	
Alarm hysteresis for input	(0.0-20.0) mA	

Table 62. Event counter CNTGGIO

Function	Range or value	Accuracy
Counter value	0-10000	-
Max. count up speed	10 pulses/s	-

Table 63. Disturbance report DRPRDRE

Function	Range or value	Accuracy
Pre-fault time	(0.05–1.00) s	-
Post-fault time	(0.1–10.0) s	-
Limit time	(0.5–10.0) s	-
Maximum number of recordings	100	-
Time tagging resolution	1 ms	See table 86
Maximum number of analog inputs	30 + 10 (external + internally derived)	-
Maximum number of binary inputs	96	-
Maximum number of phasors in the Trip Value recorder per recording	30	-
Maximum number of indications in a disturbance report	96	-
Maximum number of events in the Event recording per recording	150	-
Maximum number of events in the Event list	1000, first in - first out	-
Maximum total recording time (3.4 s recording time and maximum number of channels, typical value)	340 seconds (100 recordings) at 50 Hz, 280 seconds (80 recordings) at 60 Hz	-
Sampling rate	1 kHz at 50 Hz 1.2 kHz at 60 Hz	-
Recording bandwidth	(5-300) Hz	-

Table 64. Fault locator LMBRFLO

Function	Value or range	Accuracy
Reactive and resistive reach	(0.001-1500.000) Ω/phase	± 2.0% static accuracy ± 2.0% degrees static angular accuracy Conditions: Voltage range: (0.1-1.1) x U_r Current range: (0.5-30) x I_r
Phase selection	According to input signals	-
Maximum number of fault locations	100	-

Table 65. Event list

Function		Value
Buffer capacity	Maximum number of events in the list	1000
Resolution		1 ms
Accuracy		Depending on time synchronizing

Table 66. Indications

Function		Value
Buffer capacity	Maximum number of indications presented for single disturbance	96
	Maximum number of recorded disturbances	100

Table 67. Event recorder

Function		Value
Buffer capacity	Maximum number of events in disturbance report	150
	Maximum number of disturbance reports	100
Resolution		1 ms
Accuracy		Depending on time synchronizing

Table 68. Trip value recorder

Function		Value
Buffer capacity	Maximum number of analog inputs	30
	Maximum number of disturbance reports	100

Table 69. Disturbance recorder

Function		Value
Buffer capacity	Maximum number of analog inputs	40
	Maximum number of binary inputs	96
	Maximum number of disturbance reports	100
Maximum total recording time (3.4 s recording time and maximum number of channels, typical value)		340 seconds (100 recordings) at 50 Hz 280 seconds (80 recordings) at 60 Hz

Metering

Table 70. Pulse counter PCGGIO

Function	Setting range	Accuracy
Input frequency	See Binary Input Module (BIM)	-
Cycle time for report of counter value	(1–3600) s	-

Table 71. Energy metering ETPMMTR

Function	Range or value	Accuracy
Energy metering	kWh Export/Import, kvarh Export/Import	Input from MMXU. No extra error at steady load

Station communication

Table 72. IEC 61850-8-1 communication protocol

Function	Value
Protocol	IEC 61850-8-1
Communication speed for the IEDs	100BASE-FX

Table 73. LON communication protocol

Function	Value
Protocol	LON
Communication speed	1.25 Mbit/s

Table 74. SPA communication protocol

Function	Value
Protocol	SPA
Communication speed	300, 1200, 2400, 4800, 9600, 19200 or 38400 Bd
Slave number	1 to 899

Table 75. IEC 60870-5-103 communication protocol

Function	Value
Protocol	IEC 60870-5-103
Communication speed	9600, 19200 Bd

Table 76. SLM – LON port

Quantity	Range or value
Optical connector	Glass fibre: type ST Plastic fibre: type HFBR snap-in
Fibre, optical budget	Glass fibre: 11 dB (1000 m typically *) Plastic fibre: 7 dB (10 m typically *)
Fibre diameter	Glass fibre: 62.5/125 µm Plastic fibre: 1 mm
*) depending on optical budget calculation	

Table 77. SLM – SPA/IEC 60870-5-103 port

Quantity	Range or value
Optical connector	Glass fibre: type ST Plastic fibre: type HFBR snap-in
Fibre, optical budget	Glass fibre: 11 dB (3000ft/1000 m typically *) Plastic fibre: 7 dB (80ft/25 m typically *)
Fibre diameter	Glass fibre: 62.5/125 µm Plastic fibre: 1 mm
*) depending on optical budget calculation	

Table 78. Galvanic RS485 communication module

Quantity	Range or value
Communication speed	2400–19200 bauds
External connectors	RS-485 6-pole connector Soft ground 2-pole connector

Remote communication

Table 79. Line data communication module

Characteristic	Range or value		
Type of LDCM	**Short range (SR)**	**Medium range (MR)**	**Long range (LR)**
Type of fibre	Graded-index multimode 62.5/125 µm or 50/125 µm	Singlemode 9/125 µm	Singlemode 9/125 µm
Wave length	850 nm	1310 nm	1550 nm
Optical budget Graded-index multimode 62.5/125 µm, Graded-index multimode 50/125 µm	13 dB (typical distance about 3 km *) 9 dB (typical distance about 2 km *)	22 dB (typical distance 80 km *)	26 dB (typical distance 110 km *)
Optical connector	Type ST	Type FC/PC	Type FC/PC
Protocol	C37.94	C37.94 implementation **)	C37.94 implementation **)
Data transmission	Synchronous	Synchronous	Synchronous
Transmission rate / Data rate	2 Mb/s / 64 kbit/s	2 Mb/s / 64 kbit/s	2 Mb/s / 64 kbit/s
Clock source	Internal or derived from received signal	Internal or derived from received signal	Internal or derived from received signal
*) depending on optical budget calculation **) C37.94 originally defined just for multimode; using same header, configuration and data format as C37.94			

Hardware

IED

Table 80. Case

Material	Steel sheet
Front plate	Steel sheet profile with cut-out for HMI
Surface treatment	Aluzink preplated steel
Finish	Light grey (RAL 7035)

Table 81. Water and dust protection level according to IEC 60529

Front	IP40 (IP54 with sealing strip)
Rear, sides, top and bottom	IP20

Table 82. Weight

Case size	Weight
6U, 1/2 x 19”	≤ 10 kg
6U, 3/4 x 19”	≤ 15 kg
6U, 1/1 x 19”	≤ 18 kg

Connection system

Table 83. CT and VT circuit connectors

Connector type	Rated voltage and current	Maximum conductor area
Terminal blocks of feed through type	250 V AC, 20 A	4 mm^2
Terminal blocks suitable for ring lug terminals	250 V AC, 20 A	4 mm^2

Table 84. Binary I/O connection system

Connector type	Rated voltage	Maximum conductor area
Screw compression type	250 V AC	2.5 mm^2 2 × 1 mm^2
Terminal blocks suitable for ring lug terminals	300 V AC	3 mm^2

Basic IED functions

Table 85. Self supervision with internal event list

Data	Value
Recording manner	Continuous, event controlled
List size	1000 events, first in-first out

Table 86. Time synchronization, time tagging

Function	Value
Time tagging resolution, events and sampled measurement values	1 ms
Time tagging error with synchronization once/min (minute pulse synchronization), events and sampled measurement values	± 1.0 ms typically
Time tagging error with SNTP synchronization, sampled measurement values	± 1.0 ms typically

Table 87. GPS time synchronization module (GSM)

Function	Range or value	Accuracy
Receiver	–	±1µs relative UTC
Time to reliable time reference with antenna in new position or after power loss longer than 1 month	<30 minutes	–
Time to reliable time reference after a power loss longer than 48 hours	<15 minutes	–
Time to reliable time reference after a power loss shorter than 48 hours	<5 minutes	–

Table 88. GPS – Antenna and cable

Function	Value
Max antenna cable attenuation	26 db @ 1.6 GHz
Antenna cable impedance	50 ohm
Lightning protection	Must be provided externally
Antenna cable connector	SMA in receiver end TNC in antenna end

Table 89. IRIG-B

Quantity	Rated value
Number of channels IRIG-B	1
Number of channels PPS	1
Electrical connector IRIG-B	BNC
Optical connector PPS and IRIG-B	Type ST
Type of fibre	62.5/125 µm multimode fibre

Inverse characteristic

Table 90. ANSI Inverse time characteristics

Function	Range or value	Accuracy
Operating characteristic: $t = \left(\frac{A}{\left(I^P - 1\right)} + B \right) \cdot k$ Reset characteristic: $t = \frac{t_r}{\left(I^2 - 1\right)} \cdot k$ $I = I_{measured}/I_{set}$	k = (0.05-999) in steps of 0.01 unless otherwise stated	-
ANSI Extremely Inverse	A=28.2, B=0.1217, P=2.0 , tr=29.1	ANSI/IEEE C37.112, class 5 + 30 ms
ANSI Very inverse	A=19.61, B=0.491, P=2.0 , tr=21.6	
ANSI Normal Inverse	A=0.0086, B=0.0185, P=0.02, tr=0.46	
ANSI Moderately Inverse	A=0.0515, B=0.1140, P=0.02, tr=4.85	
ANSI Long Time Extremely Inverse	A=64.07, B=0.250, P=2.0, tr=30	
ANSI Long Time Very Inverse	A=28.55, B=0.712, P=2.0, tr=13.46	
ANSI Long Time Inverse	k=(0.05-999) in steps of 0.01 A=0.086, B=0.185, P=0.02, tr=4.6	

Table 91. IEC Inverse time characteristics

Function	Range or value	Accuracy
Operating characteristic: $t = \left(\frac{A}{\left(I^P - 1\right)}\right) \cdot k$ $I = I_{measured}/I_{set}$	k = (0.05-999) in steps of 0.01	-
Time delay to reset, IEC inverse time	(0.000-60.000) s	± 0.5% of set time ± 10 ms
IEC Normal Inverse	A=0.14, P=0.02	IEC 60255-3, class 5 + 40 ms
IEC Very inverse	A=13.5, P=1.0	
IEC Inverse	A=0.14, P=0.02	
IEC Extremely inverse	A=80.0, P=2.0	
IEC Short time inverse	A=0.05, P=0.04	
IEC Long time inverse	A=120, P=1.0	
Programmable characteristic Operate characteristic: $t = \left(\frac{A}{\left(I^P - C\right)} + B\right) \cdot k$ Reset characteristic: $t = \frac{TR}{\left(I^{PR} - CR\right)} \cdot k$ $I = I_{measured}/I_{set}$	k = (0.05-999) in steps of 0.01 A=(0.005-200.000) in steps of 0.001 B=(0.00-20.00) in steps of 0.01 C=(0.1-10.0) in steps of 0.1 P=(0.005-3.000) in steps of 0.001 TR=(0.005-100.000) in steps of 0.001 CR=(0.1-10.0) in steps of 0.1 PR=(0.005-3.000) in steps of 0.001	IEC 60255, class 5 + 40 ms

Table 92. RI and RD type inverse time characteristics

Function	Range or value	Accuracy
RI type inverse characteristic $t = \frac{1}{0.339 - \frac{0.236}{I}} \cdot k$ $I = I_{measured}/I_{set}$	k = (0.05-999) in steps of 0.01	IEC 60255-3, class 5 + 40 ms
RD type logarithmic inverse characteristic $t = 5.8 - \left(1.35 \cdot ln \frac{I}{k}\right)$ $I = I_{measured}/I_{set}$	k = (0.05-999) in steps of 0.01	IEC 60255-3, class 5 + 40 ms

Table 93. Inverse time characteristics for Two step undervoltage protection (PUVM, 27)

Function	Range or value	Accuracy
Type A curve: $t = \frac{k}{\left(\frac{U < -U}{U <}\right)}$ (Equation 4) U< = U_{set} U = $UV_{measured}$	k = (0.05-1.10) in steps of 0.01	Class 5 +40 ms
Type B curve: $t = \frac{k \cdot 480}{\left(32 \cdot \frac{U < -U}{U <} - 0.5\right)^{2.0}} + 0.055$ (Equation 5) U< = U_{set} U = $U_{measured}$	k = (0.05-1.10) in steps of 0.01	
Programmable curve: $t = \left[\frac{k \cdot A}{\left(B \cdot \frac{U < -U}{U <} - C\right)^{P}}\right] + D$ (Equation 6) U< = U_{set} U = $U_{measured}$	k = (0.05-1.10) in steps of 0.01 A = (0.005-200.000) in steps of 0.001 B = (0.50-100.00) in steps of 0.01 C = (0.0-1.0) in steps of 0.1 D = (0.000-60.000) in steps of 0.001 P = (0.000-3.000) in steps of 0.001	

Table 94. Inverse time characteristics for Two step overvoltage protection (POVM, 59)

Function	Range or value	Accuracy
Type A curve: $t = \frac{k}{\left(\frac{U - U>}{U>}\right)}$ (Equation 7) U> = U_{set} U = $U_{measured}$	k = (0.05-1.10) in steps of 0.01	Class 5 +40 ms
Type B curve: $t = \frac{k \cdot 480}{\left(32 \cdot \frac{U - U>}{U>} - 0.5\right)^{2.0} - 0.035}$ (Equation 8)	k = (0.05-1.10) in steps of 0.01	
Type C curve: $t = \frac{k \cdot 480}{\left(32 \cdot \frac{U - U>}{U>} - 0.5\right)^{3.0} - 0.035}$ (Equation 9)	k = (0.05-1.10) in steps of 0.01	
Programmable curve: $t = \frac{k \cdot A}{\left(B \cdot \frac{U - U>}{U>} - C\right)^{P}} + D$ (Equation 10)	k = (0.05-1.10) in steps of 0.01 A = (0.005-200.000) in steps of 0.001 B = (0.50-100.00) in steps of 0.01 C = (0.0-1.0) in steps of 0.1 D = (0.000-60.000) in steps of 0.001 P = (0.000-3.000) in steps of 0.001	

Table 95. Inverse time characteristics for Two step residual overvoltage protection (POVM, 59N)

Function	Range or value	Accuracy
Type A curve: $t = \frac{k}{\left(\frac{U - U>}{U>}\right)}$ (Equation 11) U> = U_{set} U = $U_{measured}$	k = (0.05-1.10) in steps of 0.01	Class 5 +40 ms
Type B curve: $t = \frac{k \cdot 480}{\left(32 \cdot \frac{U - U>}{U>} - 0.5\right)^{2.0} - 0.035}$ (Equation 12)	k = (0.05-1.10) in steps of 0.01	
Type C curve: $t = \frac{k \cdot 480}{\left(32 \cdot \frac{U - U>}{U>} - 0.5\right)^{3.0} - 0.035}$ (Equation 13)	k = (0.05-1.10) in steps of 0.01	
Programmable curve: $t = \frac{k \cdot A}{\left(B \cdot \frac{U - U>}{U>} - C\right)^{P}} + D$ (Equation 14)	k = (0.05-1.10) in steps of 0.01 A = (0.005-200.000) in steps of 0.001 B = (0.50-100.00) in steps of 0.01 C = (0.0-1.0) in steps of 0.1 D = (0.000-60.000) in steps of 0.001 P = (0.000-3.000) in steps of 0.001	

6. Ordering

Guidelines

Carefully read and follow the set of rules to ensure problem-free order management. Be aware that certain functions can only be ordered in combination with other functions and that some functions require specific hardware selections.

Basic hardware and functions

Platform and basic functionality

Basic IED 670 platform and common functions housed in 1/1 sized 19” casing

Manuals on CD

Operator’s manual (English)

Installation and commissioning manual (English)

Technical reference manual (English)

Application manual (English)

Getting started guide (English)

Basic IED functions

Self-supervision with internal event list
Time and synchronization error
Time synchronization
Parameter setting groups
Test mode functionality
Change lock function
IED Identifiers
Product information
Misc Base common
IED Runtime comp
Rated system frequency
Signal Matrix for binary inputs
Signal Matrix for binary outputs
Signal Matrix for mA inputs
Signal Matrix for analog inputs
Summation block 3 phase
Parameter setting function for HMI in PCM 600
Local HMI signals
Authority status
Authority check
FTP access with password
SPA communication mapping

Control

Logic Rotating Switch for function selection and LHMI presentation *(SLGGIO)*
Selector mini switch *(VSGGIO)*
IEC 618850 generic communication I/O functions *(DPGGIO)*
Single point generic control 8 signals
Single command, 16 signals
Horizontal communication via GOOSE for VCTR

Logic

Tripping logic *(PTRC, 94)*
Trip matrix logic *(GGIO)*
Configurable logic blocks
Fixed signal function block
Boolean 16 to Integer conversion with logic node representation
Integer to Boolean 16 conversion with logic node representation

Monitoring

Measurements *(MMXU, MSQI)*

Function block for service values presentation of the analog inputs

Event counter

Event function

Disturbance report *(RDRE)*

IEC 61850 generic communication I/O functions *(SPGGIO, SP16GGIO, MVGGIO)*

Logical signal status report

Measured value expander block

Metering

Pulse counter logic *(GGIO)*

Energy metering and demand handling *(MMTR)*

Station communication

SPA communication protocool

LON communication protocool

IEC 60870-5-103 communication protocool

Operation selection between SPA and IEC 60870-5-103 for SLM

DNP3.0 for TCP/IP communication protocol

DNP3.0 for EIA-485 communication protocol

Parameter setting function for IEC 61850

Horizontal communication via GOOSE for interlocking

Goose Binary recieve

AutomationBits, command function for DNP3.0

Multiple command and transmit

Ethernet configuration of links

Remote communication

Binary signal transfer to remote end, 32 signals

Binary signal transfer to remote end, 8 signals

Transmission of analog data from LDCM

Receive analog data from remote LDCM

Receive binary status from remote LDCM, 8 signals

Receive binary status from remote LDCM, 32 signals

Hardware

Numeric processing module

Product specification

REC670 Quantity: ☐

Default:

The IED connect CD contains configuration alternative. Use the PCM600 to create or modify the configuration. The PCM600 can also be used for adaptation of an included example configuration.

Option:

Customer specific configuration On request

Connection type for Power supply modules and I/O modules

Rule: Same connection type for Power supply modules and I/O modules must be ordered

Compression terminals	☐	1MRK 002 960-AA
Ring lug terminals	☐	1MRK 002 960-BA

Power supply module

Rule: One Power supply module must be specified

Power supply module *(PSM)*	24-60 VDC	☐	1MRK 002 239-AB
	90-250 VDC	☐	1MRK 002 239-BB

Control

Rule: One Apparatus control must be ordered

Apparatus control for single bay, max 8 apparatuses (1CB) incl. interlocking *(APC8)*	☐	1MRK 002 916-GC
Apparatus control for single bay, max 15 apparatuses (2CBs) incl. interlocking *(APC15)*	☐	1MRK 002 916-HC
Apparatus control for up to 6 bays, max 30 apparatuses (6CBs) incl. interlocking *(APC30)*	☐	1MRK 002 916-RC

Optional functions

Differential protection

Rule: One of Differential protection must be ordered

		1	2	3	4	5	6	
1Ph High impedance differential protection *(PDIF, 87)*	Qty:	☐	☐	☐	☐	☐	☐	1MRK 002 901-HA

Current protection

Instantaneous phase overcurrent protection (PIOC, 50)	Qty:	1 2 3 4 5 6	1MRK 002 906-AB
Four step phase overcurrent protection *(PTOC, 51/67)*	Qty:	1 2 3 4 5 6	1MRK 002 906-BB
Instantaneous residual overcurrent protection *(PIOC, 50N)*	Qty:	1 2 3 4 5 6	1MRK 002 906-CB
Four step residual overcurrent protection *(PTOC, 51N/ 67N)*	Qty:	1 2 3 4 5 6	1MRK 002 906-DB
Sensitive directional residual overcurrent and power protection *(PSDE, 67N)*	Qty:	1 2 3	1MRK 002 907-DA
Thermal overload protection, one time constant *(PTTR, 26)*	Qty:	1 2	1MRK 002 906-LB
Thermal overload protection, two time constants *(PTTR, 49)*	Qty:	1 2	1MRK 002 906-NA
Breaker failure protection *(RBRF, 50BF)*	Qty:	1 2 3 4 5 6	1MRK 002 906-RB
Stub protection *(PTOC, 50STB)*	Qty:		1MRK 002 906-ZB
Pole discordance protection *(RPLD, 52PD)*	Qty:	1 2 3	1MRK 002 907-AB
Directional underpower protection *(PDUP, 37)*	Qty:	1 2	1MRK 002 902-FA
Directional overpower protection *(PDOP, 32)*	Qty:	1 2	1MRK 002 902-GA
Broken conductor check *(PTOC, 46)*	Qty:		1MRK 002 902-DA

Voltage protection

Two step undervoltage protection *(PVUM, 27)*	Qty:	1 2	1MRK 002 908-AB
Two step overvoltage protection *(POVM, 59)*	Qty:	1 2	1MRK 002 908-DB
Two step residual overvoltage protection *(POVM, 59N)*	Qty:	1 2	1MRK 002 908-GB
Voltage differential protection *(PTOV, 60)*	Qty:	1 2	1MRK 002 924-TA
Loss of voltage check *(PTUV, 27)*	Qty:		1MRK 002 902-EA

Frequency protection

Underfrequency protection *(PTUF, 81)*	Qty:	1 2 3 4 5 6	1MRK 002 908-NB
Overfrequency protection *(PTOF, 81)*	Qty:	1 2 3 4 5 6	1MRK 002 908-RB
Rate-of-change frequency protection *(PFRC, 81)*	Qty:	1 2 3 4 5 6	1MRK 002 908-SA

Multipurpose protection

General current and voltage protection *(GAPC)*	Qty:	1 2 3 4 5 6 7 8 9	1MRK 002 902-AA

Secondary system supervision

Current circuit supervision *(RDIF)*	Qty:	1 2 3 4 5	1MRK 002 914-AA
Fuse failure supervision *(RFUF)*	Qty:	1 2 3 4	1MRK 002 914-GB

Control

Synchrocheck, energizing check and synchronizing *(SESRSYN, 25)*	Qty:	1 ☐ 2 ☐	1MRK 002 916-SB
Rule: Can only be ordered when APC30 is selected.			
Synchrocheck, energizing check and synchronizing *(SESRSYN, 25)*	Qty:	1 ☐ 2 ☐ 3 ☐ 4 ☐ 5 ☐ 6 ☐	1MRK 002 916-SB
Rule: Can only be ordered when APC30 is selected.			
Autorecloser *(SMBRREC, 79)*	Qty:	1 ☐ 2 ☐ 3 ☐ 4 ☐	1MRK 002 916-EB
Rule: Can only be ordered when APC30 is selected.			
Autorecloser *(SMBRREC, 79)*	Qty:	1 ☐ 2 ☐ 3 ☐ 4 ☐ 5 ☐ 6 ☐	1MRK 002 916-TB
Rule: Only one of (TRATCC, 90) can be ordered Automatic voltage control for tapchanger, single transformer *(TR1ATCC, 90)*	Qty:	1 ☐ 2 ☐ 3 ☐ 4 ☐	1MRK 002 916-YA
Automatic voltage control for tapchanger, parallel control *(TR8ATCC, 90)*	Qty:	1 ☐ 2 ☐ 3 ☐ 4 ☐	1MRK 002 916-ZA
Tap changer control and supervision, 6 binary inputs, coded binary (Binary, BCD, Gray)*(TCMYLTC, 84)*	Qty:	1 ☐ 2 ☐ 3 ☐ 4 ☐	1MRK 002 925-PA
Tap changer control and supervision, 32 binary inputs, one per position*(TCLYLTC, 84)*	Qty:	1 ☐ 2 ☐ 3 ☐ 4 ☐	1MRK 002 924-UA

Scheme communication

Scheme communication logic for distance protection or overcurrent protection *(ZCPSCH, 85)*	☐	1MRK 002 904-RA
Current reversal and weak end infeed logic for distance protection *(ZCRWPSCH, 85)*	☐	1MRK 002 904-SA
Local acceleration logic *(ZCLCPLAL)*	☐	1MRK 002 904-VA
Scheme communication logic for residual overcurrent protection *(ECPSCH, 85)*	☐	1MRK 002 906-GA
Current reversal and weak end infeed logic for residual overcurrent protection *(ECRWPSCH, 85)*	☐	1MRK 002 906-HA

Logic

Rule: One is included as basic Tripping logic *(PTRC 94)*	Qty:	2 ☐ 3 ☐ 4 ☐ 5 ☐ 6 ☐	1MRK 002 917-AA
Extension logic package	Qty:	☐	1MRK 002 917-MB

Monitoring

Fault locator *(RFLO)*	☐	1MRK 002 918-BB

First HMI language

Rule: One must be ordered

HMI language, English IEC	☐	1MRK 002 930-AA
HMI language, English ANSI	☐	1MRK 002 930-BA

Additional HMI language

Rule: Maximum one alternative can be selected

HMI language, german	☐	1MRK 002 920-AA
HMI language, russian	☐	1MRK 002 920-BA
HMI language, french	☐	1MRK 002 920-CA
HMI language, spanish	☐	1MRK 002 920-DA
HMI language, italian	☐	1MRK 002 920-EA
HMI language, polish	☐	1MRK 002 920-GA
HMI language, hungarian	☐	1MRK 002 920-FA
HMI language, czech	☐	1MRK 002 920-HA
HMI language, swedish	☐	1MRK 002 920-KA

Optional hardware

Human machine interface

Rule: One must be ordered. "Medium size - graphic display" HMI is required in order to be able to give Raise/Lower commands, in the manual operating mode, to the OLTC from IED 670 via Voltage control (VCTR) function.

Small size – text only, IEC symbols, 1/2 19"	☐	1MRK 000 008-HB
Small size – text, IEC symbols, 3/4 19"	☐	1MRK 000 008-PB
Small size – text, IEC symbols, 1/1 19"	☐	1MRK 000 008-KB
Medium size – graphic display, IEC symbols, 1/2 19"	☐	1MRK 000 008-LB
Medium size – graphic display, IEC symbols, 3/4 19"	☐	1MRK 000 008-NB
Medium size – graphic display, IEC symbols, 1/1 19"	☐	1MRK 000 008-MB
Medium size – graphic display, ANSI symbols, 1/2 19"	☐	1MRK 000 008-LC
Medium size – graphic display, ANSI symbols, 3/4 19"	☐	1MRK 000 008-NC
Medium size – graphic display, ANSI symbols, 1/1 19"	☐	1MRK 000 008-MC

Analog system

Rule: One Transformer input module must be ordered
Note: The same type of connection terminals has to be ordered for both TRMs

Transformer input module, compression terminals	12I, 1A, 50/60 Hz	Qty:	1 ☐	2 ☐	1MRK 002 247-CG
Transformer input module, compression terminals	12I, 5A, 50/60 Hz	Qty:	1 ☐	2 ☐	1MRK 002 247-CH
Transformer input module, compression terminals	9I+3U, 1A, 50/60 Hz	Qty:	1 ☐	2 ☐	1MRK 002 247-BG
Transformer input module, compression terminals	9I+3U, 5A, 50/60 Hz	Qty:	1 ☐	2 ☐	1MRK 002 247-BH
Transformer input module, compression terminals	5I, 1A+4I, 5A+3U, 50/60 Hz	Qty:	1 ☐	2 ☐	1MRK 002 247-BK
Transformer input module, compression terminals	7I+5U, 1A, 50/60 Hz	Qty:	1 ☐	2 ☐	1MRK 002 247-AP
Transformer input module, compression terminals	7I+5U, 5A, 50/60 Hz	Qty:	1 ☐	2 ☐	1MRK 002 247-AR
Transformer input module, compression terminals	6I, 5A+1I, 1A+5U, 50/60 Hz	Qty:	1 ☐	2 ☐	1MRK 002 247-AU
Transformer input module, compression terminals	3I, 5A+4I, 1A+5U, 50/60 Hz	Qty:	1 ☐	2 ☐	1MRK 002 247-AV
Transformer input module, compression terminals	6I+6U, 1A, 50/60 Hz	Qty:	1 ☐	2 ☐	1MRK 002 247-AG
Transformer input module, compression terminals	6I+6U, 5A, 50/60 Hz	Qty:	1 ☐	2 ☐	1MRK 002 247-AH
Transformer input module, compression terminals	3I, 5A+3I, 1A+6U, 50/60 Hz	Qty:	1 ☐	2 ☐	1MRK 002 247-AE
Transformer input module, compression terminals	6I, 1A, 50/60 Hz	Qty:	1 ☐	2 ☐	1MRK 002 247-DG
Transformer input module, compression terminals	6I, 5A, 50/60 Hz	Qty:	1 ☐	2 ☐	1MRK 002 247-DH
Transformer input module, ring lug terminals	12I, 1A, 50/60 Hz	Qty:	1 ☐	2 ☐	1MRK 002 247-CC

Transformer input module, ring lug terminals	12I, 5A, 50/60 Hz	Qty:	1 ☐	2 ☐	1MRK 002 247-CD
Transformer input module, ring lug terminals	9I+3U, 1A, 50/60 Hz	Qty:	1 ☐	2 ☐	1MRK 002 247-BC
Transformer input module, ring lug terminals	9I+3U, 5A, 50/60 Hz	Qty:	1 ☐	2 ☐	1MRK 002 247-BD
Transformer input module, ring lug terminals	5I, 1A+4I, 5A+3U, 50/60 Hz	Qty:	1 ☐	2 ☐	1MRK 002 247-BF
Transformer input module, ring lug terminals	7I+5U, 1A, 50/60 Hz	Qty:	1 ☐	2 ☐	1MRK 002 247-AS
Transformer input module, ring lug terminals	7I+5U, 5A, 50/60 Hz	Qty:	1 ☐	2 ☐	1MRK 002 247-AT
Transformer input module, ring lug terminals	6I, 5A+1I, 1A+5U, 50/60 Hz	Qty:	1 ☐	2 ☐	1MRK 002 247-AX
Transformer input module, ring lug terminals	3I, 5A+4I, 1A+5U, 50/60 Hz	Qty:	1 ☐	2 ☐	1MRK 002 247-AY
Transformer input module, ring lug terminals	6I+6U, 1A, 50/60 Hz	Qty:	1 ☐	2 ☐	1MRK 002 247-AC
Transformer input module, ring lug terminals	6I+6U, 5A, 50/60 Hz	Qty:	1 ☐	2 ☐	1MRK 002 247-AD
Transformer input module, ring lug terminals	3I, 5A+3I, 1A+6U, 50/60 Hz	Qty:	1 ☐	2 ☐	1MRK 002 247-AF
Transformer input module, ring lug terminals	6I, 1A, 50/60 Hz	Qty:	1 ☐	2 ☐	1MRK 002 247-DC
Transformer input module, ring lug terminals	6I, 5A, 50/60 Hz	Qty:	1 ☐	2 ☐	1MRK 002 247-DD

Note: One Analog digital conversion module, with time synchronization is always delivered with each Transformer input module.

Case size

When ordering I/O modules, observe the maximum quantities according to tables below.

Note: Standard order of location for I/O modules is BIM-BOM-SOM-IOM-MIM-GSM from left to right as seen from the rear side of the IED, but can also be freely placed. Only the GSM (GPS time synchronization module) has a specific slot designation, depending on case size.

Note: Maximum quantity of I/O modules depends on the type of connection terminals.

Maximum quantity of I/O modules

Case sizes	BIM	IOM	BOM/ SOM	MIM	GSM	Maximum in case	
1/1 x 19”, one (1) TRM	14	6	4	4	1	14 (max 4 BOM+SOM +MIM)	☐ 1MRK 000 151-NC
1/1 x 19”, two (2) TRM	11	6	4	4	1	11 (max 4 BOM+SOM +MIM)	☐ 1MRK 000 151-ND
3/4 x 19”, one (1) TRM	8	6	4	1	1	8 (max 4 BOM+SOM+1 MIM)	☐ 1MRK 000 151-NB
3/4 x 19”, two (2) TRM	5	5	4	1	1	5 (max 4 BOM+SOM+1 MIM)	☐ 1MRK 000 151-NE
1/2 x 19”, one (1) TRM	3	3	3	0	1	3	☐ 1MRK 000 151-NA

Maximum quantity of I/O modules, with ring lug terminals, module limits see above

Case sizes	Maximum in case	Possible locations for I/O modules with ringlugs	
1/1 x 19”, one (1) TRM	7	P3, P5, P7, P9, P11, P13, P15 *Note: No ringlugs in P15 if GSM is ordered*	☐ 1MRK 000 151-NC
1/1 x 19”, two (2) TRM	5	P3, P5, P7, P9, P11	☐ 1MRK 000 151-ND
3/4 x 19”, one (1) TRM	4	P3, P5, P7, P9 *Note: No ringlugs in P9 if GSM is ordered*	☐ 1MRK 000 151-NB
3/4 x 19”, two (2) TRM	2	P3, P5	☐ 1MRK 000 151-NE
1/2 x 19”, one (1) TRM	1	P3	☐ 1MRK 000 151-NA

Binary input/output modules

Binary input module (BIM) 16 inputs

RL 24-30 VDC Qty: 1 2 3 4 5 6 7 ☐ ☐ ☐ ☐ ☐ ☐ ☐ 8 9 10 11 12 13 14 ☐ ☐ ☐ ☐ ☐ ☐ ☐ 1MRK 000 508-DB

RL 48-60 VDC Qty: 1 2 3 4 5 6 7 ☐ ☐ ☐ ☐ ☐ ☐ ☐ 8 9 10 11 12 13 14 ☐ ☐ ☐ ☐ ☐ ☐ ☐ 1MRK 000 508-AB

RL 110-125 VDC Qty: 1 2 3 4 5 6 7 ☐ ☐ ☐ ☐ ☐ ☐ ☐ 8 9 10 11 12 13 14 ☐ ☐ ☐ ☐ ☐ ☐ ☐ 1MRK 000 508-BB

RL 220-250 VDC Qty: 1 2 3 4 5 6 7 ☐ ☐ ☐ ☐ ☐ ☐ ☐ 8 9 10 11 12 13 14 ☐ ☐ ☐ ☐ ☐ ☐ ☐ 1MRK 000 508-CB

Binary input module (BIMp) with enhanced pulse counting capabilities, 16 inputs

RL 24-30 VDC Qty: 1 2 3 4 5 6 7 ☐ ☐ ☐ ☐ ☐ ☐ ☐ 8 9 10 11 12 13 14 ☐ ☐ ☐ ☐ ☐ ☐ ☐ 1MRK 000 508-HA

RL 48-60 VDC Qty: 1 2 3 4 5 6 7 ☐ ☐ ☐ ☐ ☐ ☐ ☐ 8 9 10 11 12 13 14 ☐ ☐ ☐ ☐ ☐ ☐ ☐ 1MRK 000 508-EA

RL 110-125 VDC Qty: 1 2 3 4 5 6 7 ☐ ☐ ☐ ☐ ☐ ☐ ☐ 8 9 10 11 12 13 14 ☐ ☐ ☐ ☐ ☐ ☐ ☐ 1MRK 000 508-FA

RL 220-250 VDC Qty: 1 2 3 4 5 6 7 ☐ ☐ ☐ ☐ ☐ ☐ ☐ 8 9 10 11 12 13 14 ☐ ☐ ☐ ☐ ☐ ☐ ☐ 1MRK 000 508-GA

Binary output module 24 output relays (BOM)	Qty:	1 2 3 4	1MRK 000 614-AB
Static binary output module (SOM)			
RL 48-60 VDC	Qty:	1 2 3 4	1MRK 002 614-BA
RL 110-250 VDC	Qty:	1 2 3 4	1MRK 002 614-CA
Binary input/output module (IOM) 8 inputs, 10 outputs, 2 high-speed outputs			
RL 24-30 VDC	Qty:	1 2 3 4 5 6	1MRK 000 173-GB
RL 48-60 VDC	Qty:	1 2 3 4 5 6	1MRK 000 173-AC
RL 110-125 VDC	Qty:	1 2 3 4 5 6	1MRK 000 173-BC
RL 220-250 VDC	Qty:	1 2 3 4 5 6	1MRK 000 173-CC
Binary input/output module (IOMwith MOV), 8 inputs, 10 outputs, 2 high-speed outputs			
RL 24-30 VDC	Qty:	1 2 3 4 5 6	1MRK 000 173-GC
RL 48-60 VDC	Qty:	1 2 3 4 5 6	1MRK 000 173-AD
RL 110-125 VDC	Qty:	1 2 3 4 5 6	1MRK 000 173-BD
RL 220-250 VDC	Qty:	1 2 3 4 5 6	1MRK 000 173-CD
mA input module 6 channels (MIM)	Qty:	1 2 3 4	1MRK 000 284-AB

Station communication ports

Note: Optical ethernet module, 2 glass interfaces is not allowed together with SLM.

Optical ethernet module, 1 channel glass	☐	1MRK 002 266-AA
Optical ethernet module, 2 channel glass	☐	1MRK 002 266-BA
Serial and LON communication module, supports SPA/IEC 60870-5-103, LON and DNP 3.0		
Serial/LON plastic interface	☐	1MRK 001 608-AA
Serial plastic/LON glass interface	☐	1MRK 001 608-BA
Serial/LON glass interface	☐	1MRK 001 608-CA
Galvanic RS485 communication module for DNP 3.0	☐	1MRK 002 309-AA

Remote end serial communication for C37.94

Rule: Max two LDCM can be ordered, only one LDCM in 1/2 x 19" case

		1	2	
Optical short range line data communication module (Multi mode 850 nm) *(SR LDCM)*	Qty:	☐	☐	1MRK 002 122-AB
Optical medium range line data communication module (Single mode 1310 nm) *(MR LDCM)*	Qty:	☐	☐	1MRK 002 311-AA

Time synchronization

Rule: Only one Time synchronization can be ordered.

GPS Time synchronization module	☐	1MRK 002 282-AA
IRIG-B Time synchronization module	☐	1MRK 002 305-AA

Engineering facilities

19” rack mounting kit for 1/2 x 19” IED or 2 x RHGS6 or RHGS12	Quantity:	☐	1MRK 002 420-BB
19” rack mounting kit for 3/4 x 19” IED or 3 x RHGS6	Quantity:	☐	1MRK 002 420-BA
19” rack mounting kit for 1/1 x 19” IED	Quantity:	☐	1MRK 002 420-CA
Wall mounting kit for all IED sizes	Quantity:	☐	1MRK 002 420-DA

Flush mounting kit for all IED sizes	Quantity:	☐	1MRK 000 020-Y
Flush mounting kit + IP54 sealing (factory mounted). Cannot be ordered separately thus must be specified when ordering an IED.	Quantity:	☐	1MRK 002 420-EA

Accessories

GPS antenna and mounting details

GPS antenna, including mounting kits	Quantity:	☐	1MRK 001 640-AA
Cable for antenna, 20 m	Quantity:	☐	1MRK 001 665-AA
Cable for antenna, 40 m	Quantity:	☐	1MRK 001 665-BA

Interface converter (for remote end data communication)

External interface converter from C37.94 to G703 including 1U 19” rack mounting accessories	Quantity:	1 ☐ 2 ☐	1MRK 002 245-AA
External interface converter from C37.94 to G703.E1	Quantity:	1 ☐ 2 ☐	1MRK 002 245-BA

Test switch

The test system COMBITEST intended for use with the IED 670 products is described in 1MRK 512 001-BEN and 1MRK 001024-CA. Please refer to the website: www.abb.com/substationautomation and ABB Product Guide > High Voltage Products > Protection and Control > Modular Relay > Test Equipment for detailed information. When FT switches are considered, please refer to the website: www.abb.com>ProductGuide>Medium Voltage Products>Protection and Control (Distribution) for detailed information.

Due to the high flexibility of our product and the wide variety of applications possible the test switches needs to be selected for each specific application.

Select your suitable test switch base on the available contacts arrangements shown in the reference documentation.

However our proposal for suitable variants are;

Single breaker/Single or Three Phase trip with internal neutral on current circuits (ordering number RK926 315-AK).

Single breaker/Single or Three Phase trip with external neutral on current circuits (ordering number RK926 315-AC).

Multi-breaker/Single or Three Phase trip with internal neutral on current circuits (ordering number RK926 315-BE).

Multi-breaker/Single or Three Phase trip with external neutral on current circuit (ordering number RK926 315-BV).

The normally open "In test mode" contact 29-30 on the RTXP test switches should be connected to the input of the test function block to allow activation of functions individually during testing.

Test switches type RTXP 24 are ordered separately. Please refer to Section "Related

documents" for reference to corresponding documents.

RHGS 6 Case or RHGS 12 Case with mounted RTXP 24 and the on/off switch for dc-supply are ordered separately. Please refer to Section "Related documents"for reference to corresponding documents.

Protection cover

Protective cover for rear side of RHGS6, 6U, 1/4 x 19”	Quantity:	☐	1MRK 002 420-AE
Protective cover for rear side of IED, 6U, 1/2 x 19”	Quantity:	☐	1MRK 002 420-AC
Protective cover for rear side of IED, 6U, 3/4 x 19”	Quantity:	☐	1MRK 002 420-AB
Protective cover for rear side of IED, 6U, 1/1 x 19”	Quantity:	☐	1MRK 002 420-AA

External resistor unit for high impedance differential protection

High impedance resistor unit 1-ph with resistor 1.8 kOhms and voltage dependent resistor for 20-100V operating voltage	Quantity:	1 ☐ 2 ☐ 3 ☐	RK795101-MA
High impedance resistor unit 3-ph with resistor 1.8 kOhms and voltage dependent resistor for 20-100V operating voltage	Quantity:	☐	RK795101-MB
High impedance resistor unit 1-ph with resistor 6.8 kOhms and voltage dependent resistor for 100-400V operating voltage	Quantity:	1 ☐ 2 ☐ 3 ☐	RK795101-CB
High impedance resistor unit 3-ph with resistor 6.8 kOhms and voltage dependent resistor for 100-400V operating voltage	Quantity:	☐	RK795101-DC

Combiflex

Key switch for lock-out of settings via LCD-HMI	Quantity:	☐	1MRK 000 611-A

Note: To connect the key switch, leads with 10 A Combiflex socket on one end must be used.

Side-by-side mounting kit	Quantity:	☐	1MRK 002 420-Z

Configuration and monitoring tools

Front connection cable between LCD-HMI and PC	Quantity:	☐	1MRK 001 665-CA
LED Label special paper A4, 1 pc	Quantity:	☐	1MRK 002 038-CA
LED Label special paper Letter, 1 pc	Quantity:	☐	1MRK 002 038-DA

Manuals

Note: One (1) IED Connect CD containing user documentation (Operator's manual, Technical reference manual, Installation and commissioning manual, Application manual and Getting started guide), Connectivity packages and LED label template is always included for each IED.

Rule: Specify additional quantity of IED Connect CD requested.		Quantity:		1MRK 002 290-AB
User documentation				
Rule: Specify the number of printed manuals requested Operator's manual	IEC	Quantity:		1MRK 511 188-UEN
	ANSI	Quantity:		1MRK 511 188-UUS
Technical reference manual	IEC	Quantity:		1MRK 511 187-UEN
	ANSI	Quantity:		1MRK 511 187-UUS
Installation and commissioning manual	IEC	Quantity:		1MRK 511 189-UEN
	ANSI	Quantity:		1MRK 511 189-UUS
Application manual	IEC	Quantity:		1MRK 511 190-UEN
	ANSI	Quantity:		1MRK 511 190-UUS
Engineering guide IED 670 products		Quantity:		1MRK 511 179-UEN

Reference information

For our reference and statistics we would be pleased to be provided with the following application data:

Country: End user:

Station name: Voltage level: kV

Related documents

Documents related to REC670	Identity number
Operator's manual	1MRK 511 188-UEN
Installation and commissioning manual	1MRK 511 189-UEN
Technical refernce manual	1MRK 511 187-UEN
Application manual	1MRK 511 190-UEN
Buyer's guide	1MRK 511 192-BEN
Sample specification	SA2005-001280
Connection diagram, Single breaker	1MRK 002 801-FA
Connection diagram, Double breaker	1MRK 002 801-MA
Connection diagram, 1 1/2 CB	1MRK 002 801-NA
Connection and Installation components	1MRK 513 003-BEN
Test system, COMBITEST	1MRK 512 001-BEN
Accessories for IED 670	1MRK 514 012-BEN
Getting started guide IED 670	1MRK 500 080-UEN
SPA and LON signal list for IED 670, ver. 1.1	1MRK 500 083-WEN
IEC 61850 Data objects list for IED 670, ver. 1.1	1MRK 500 084-WEN
Engineering guide IED 670 products	1MRK 511 179-UEN
Communication set-up for RED 670 Differential protection and 670 series	1MRK 505 197-UEN

More information can be found on www.abb.com/substationautomation.

Contact us

ABB AB
Substation Automation Products
SE-721 59 Västerås, Sweden
Phone +46 (0) 21 32 50 00
Fax +46 (0) 21 14 69 18

www.abb.com/substationautomation

Power and productivity
for a better world™