Doc. N.° 1SDH002011A1618 - ECN000106046 - Rev. B

SACE Tmax XT

Cable rack - XT5-XT6

XT5 - XT6

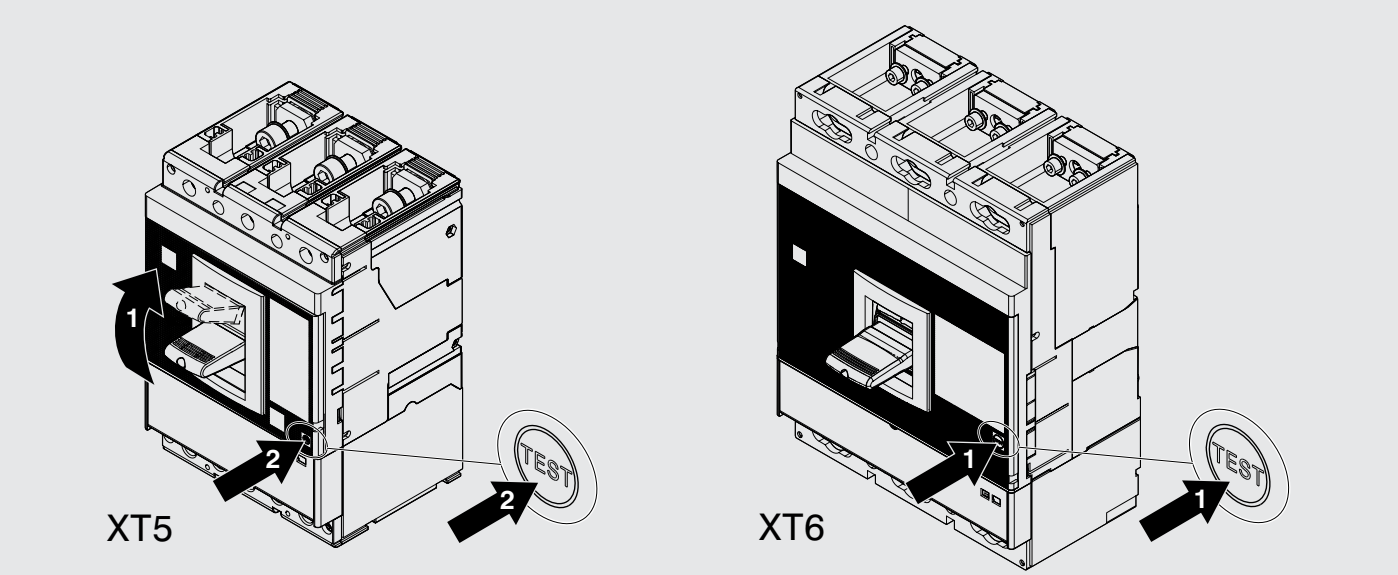

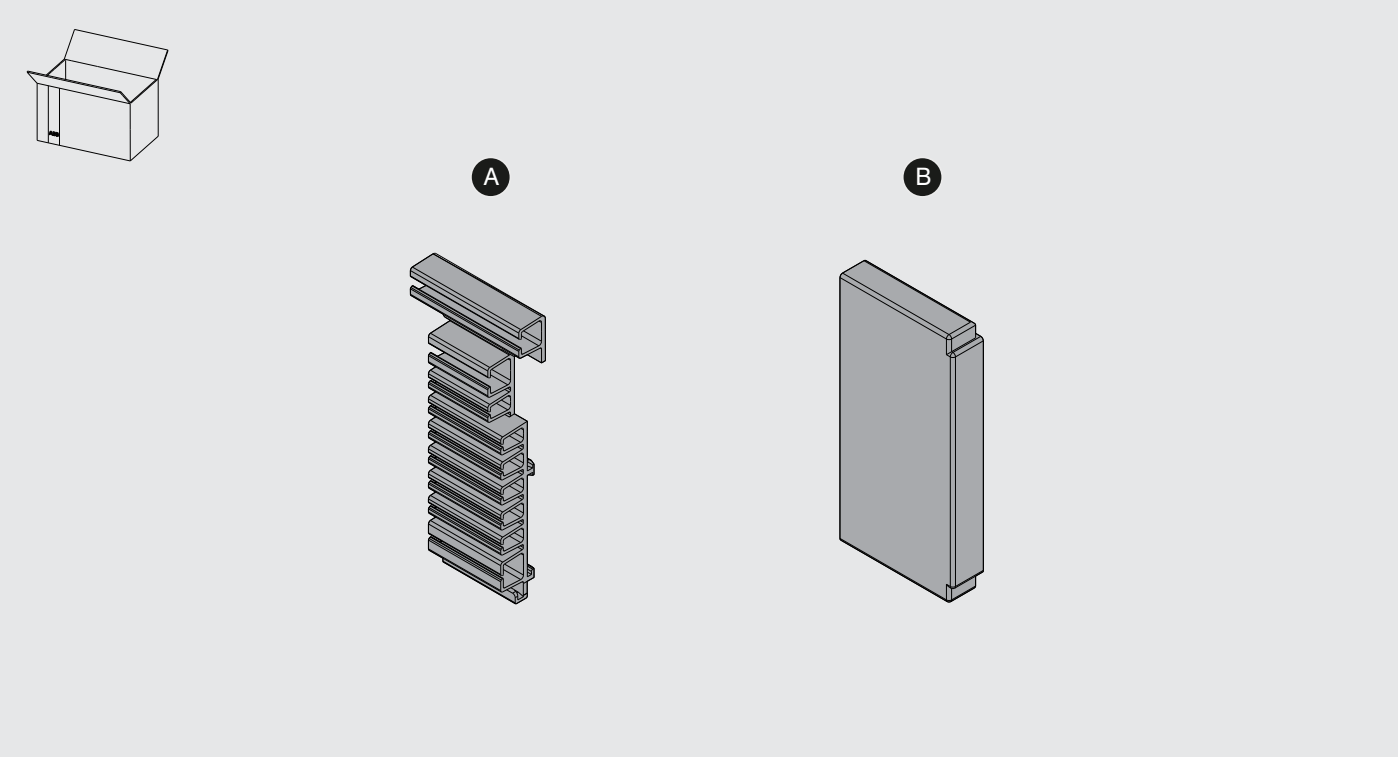

1 **XT5**

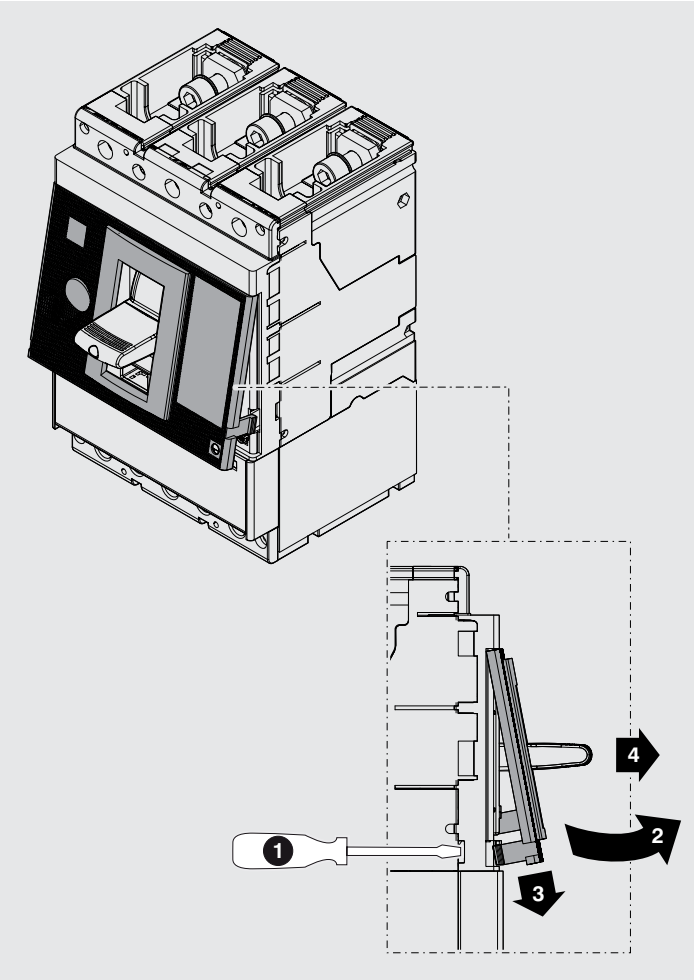

2 **XT5**

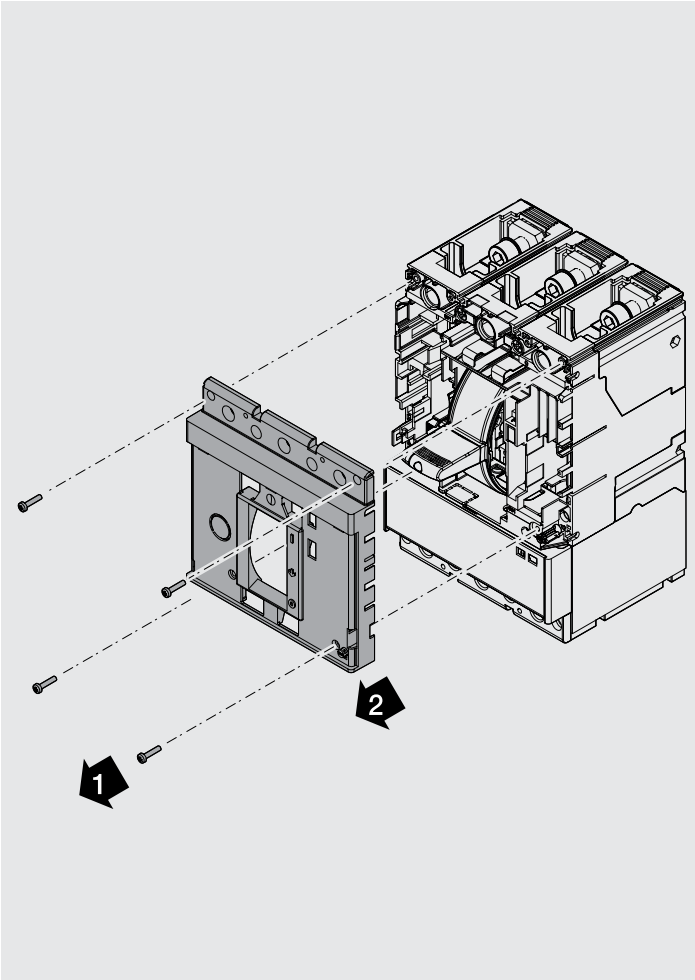

3 **Right - XT5**

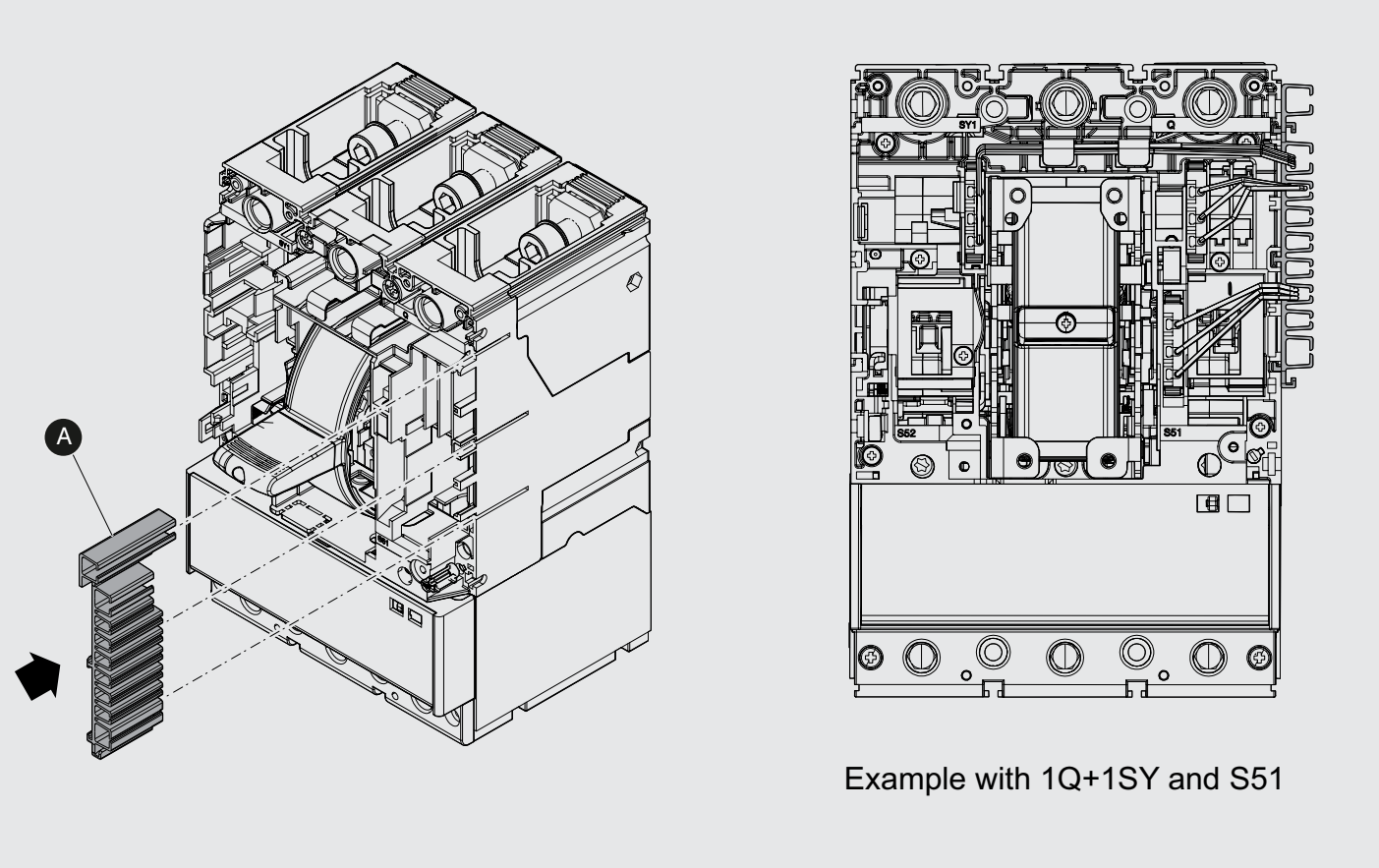

Example with 1Q+1SY and S51

4 **Left - XT5**

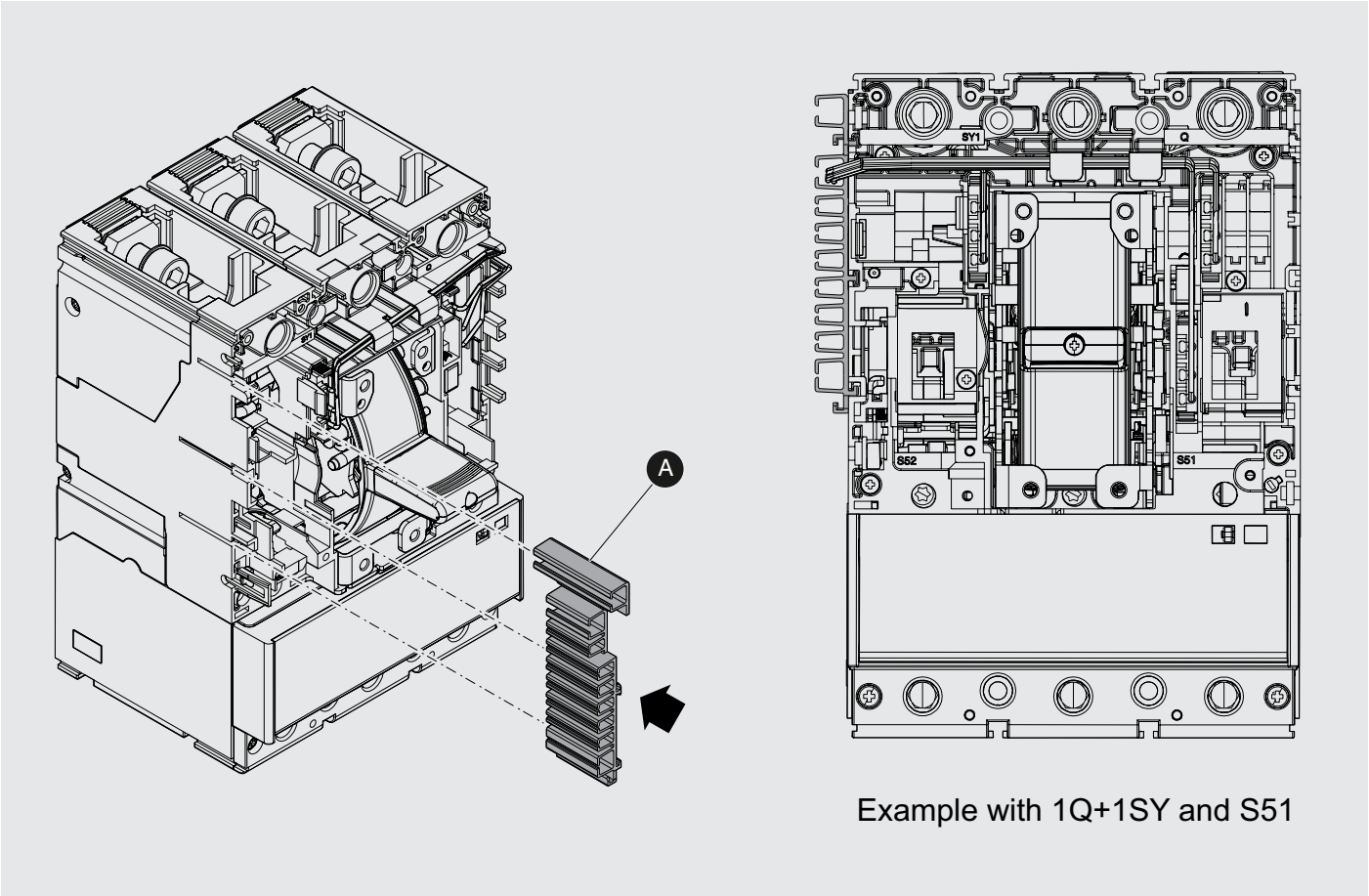

5 **XT5**

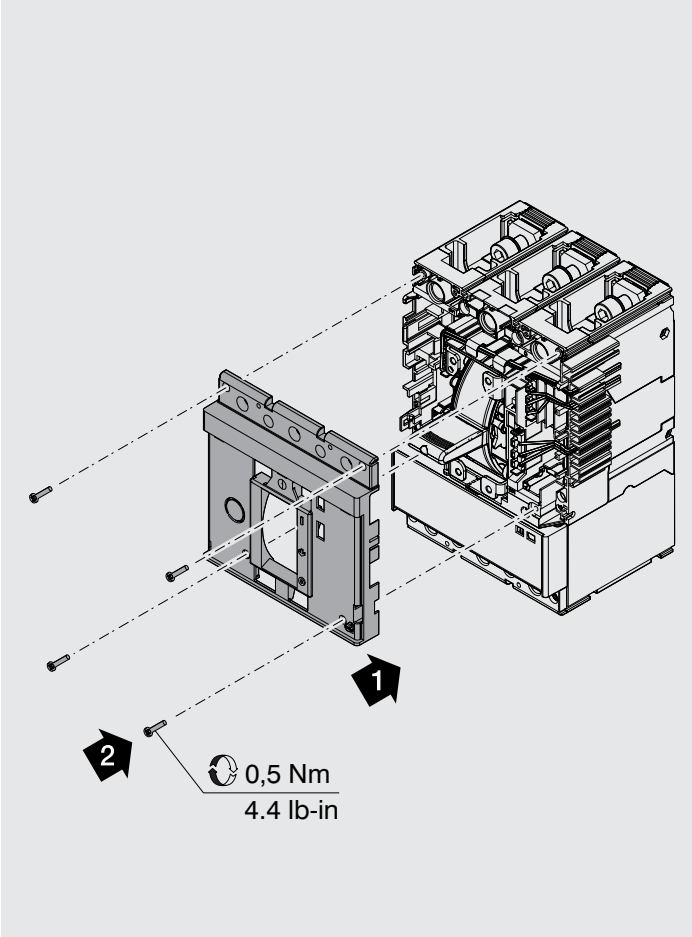

6 **XT5**

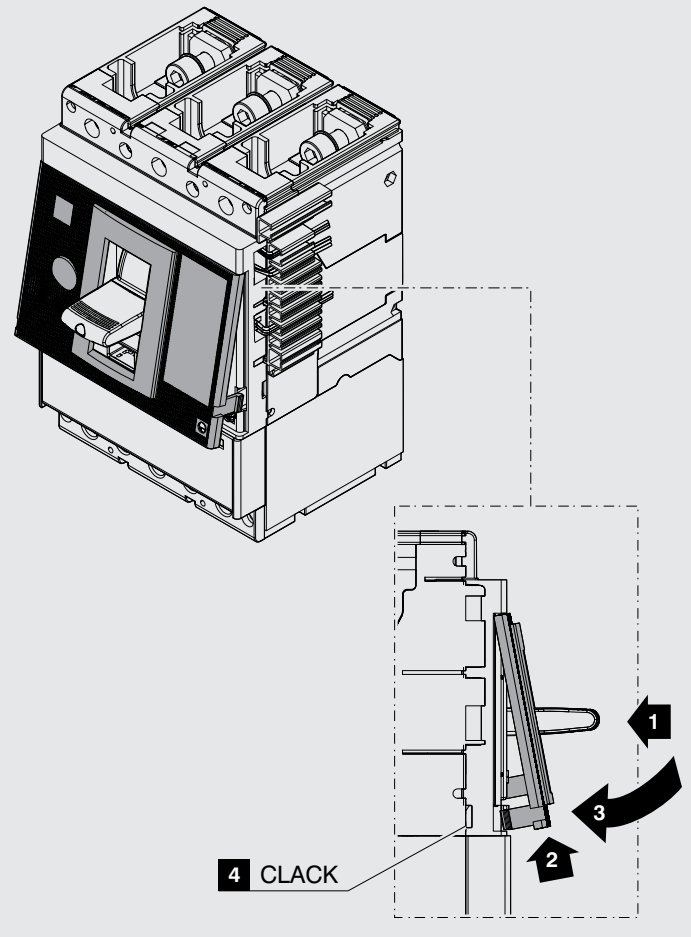

7 **XT5**

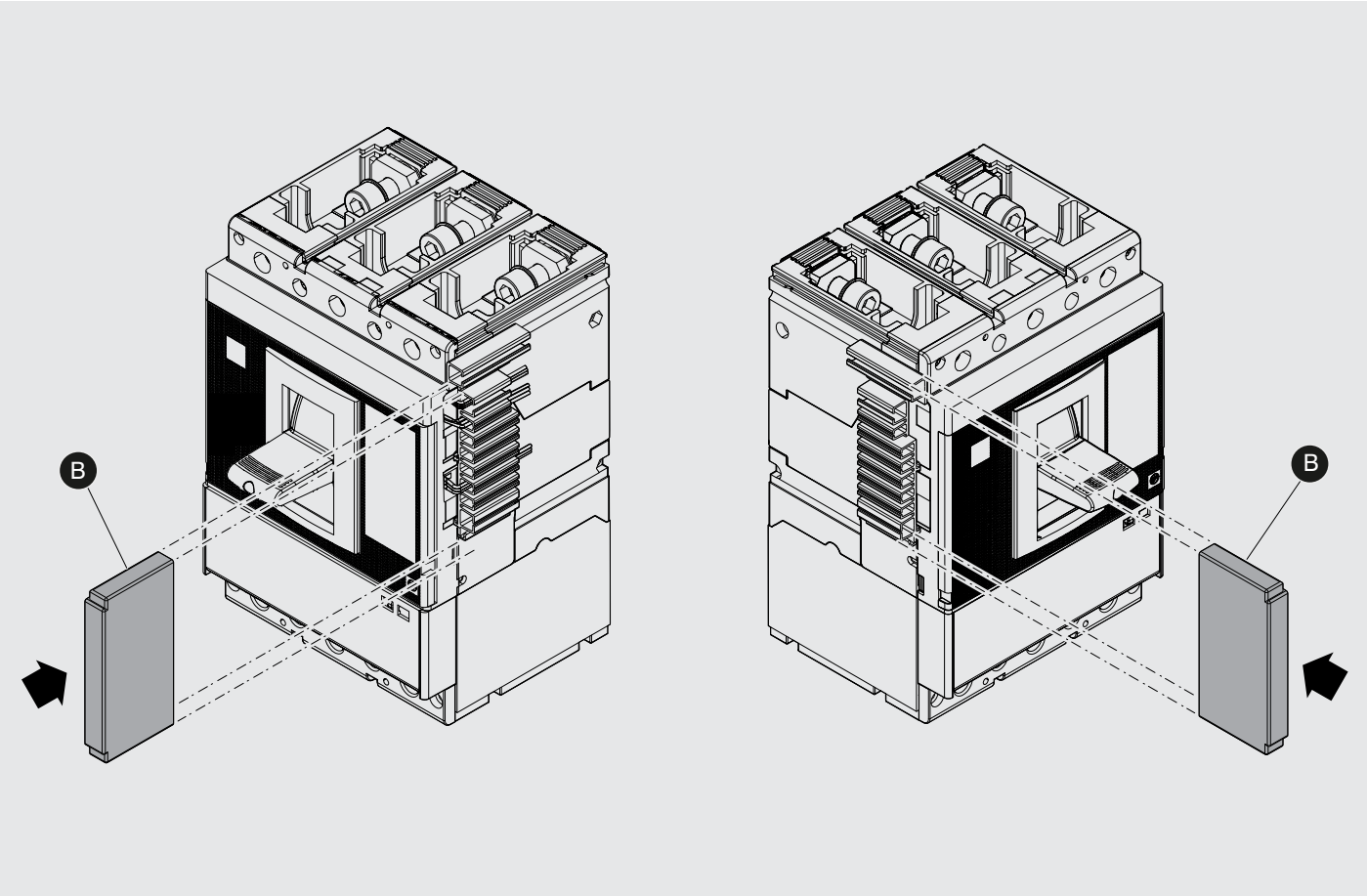

8 **XT5**

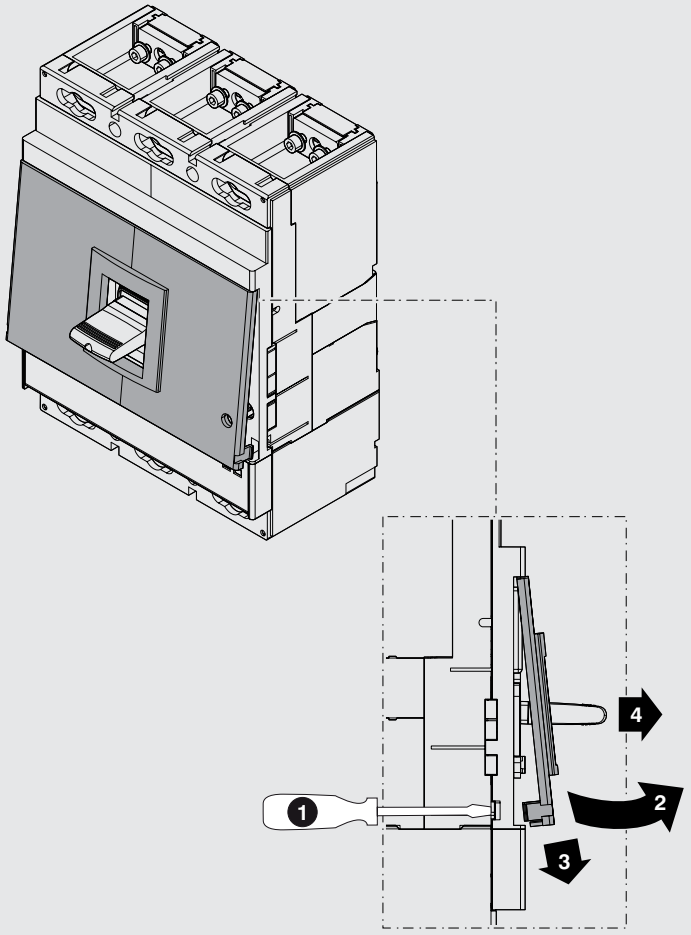

9 **XT6**

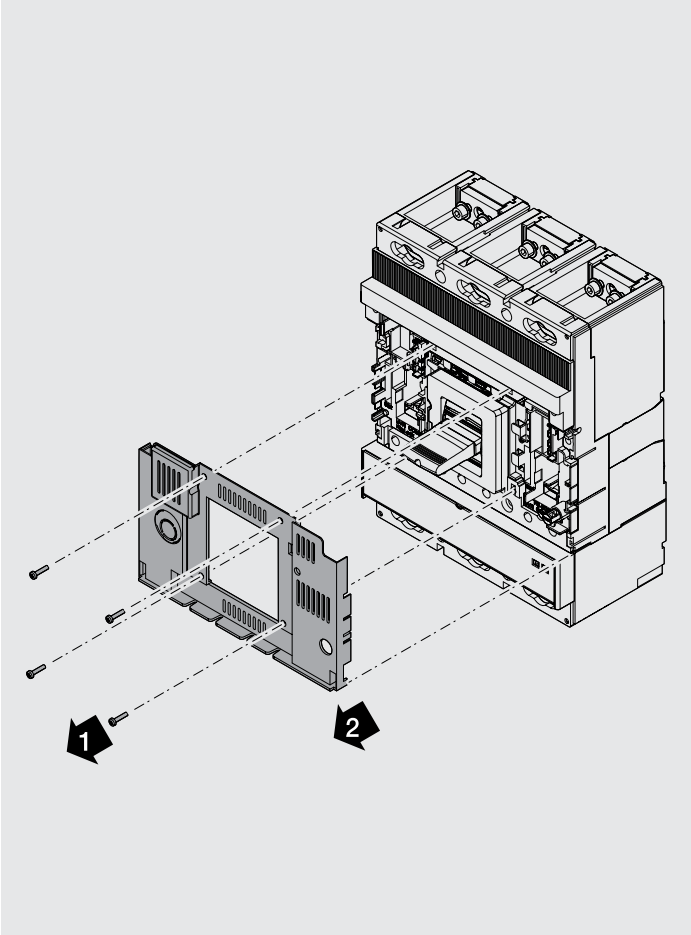

10 Right - XT6

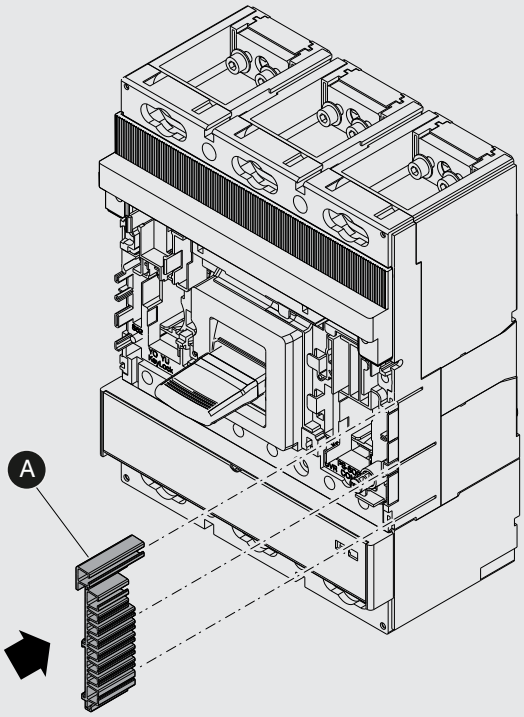

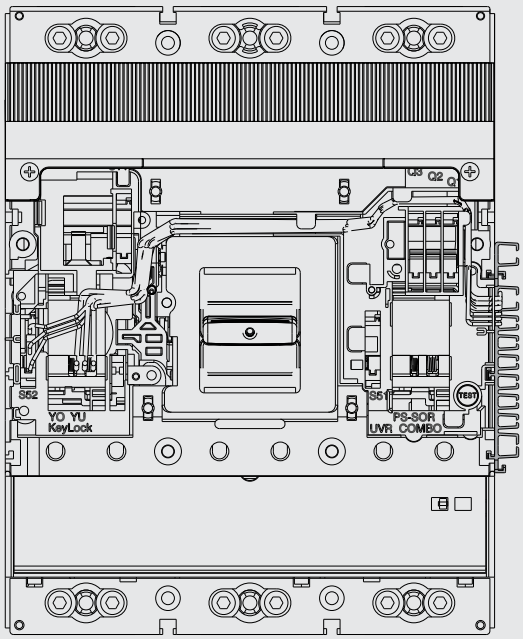

Example with YO/U and S52

11 Left - XT6

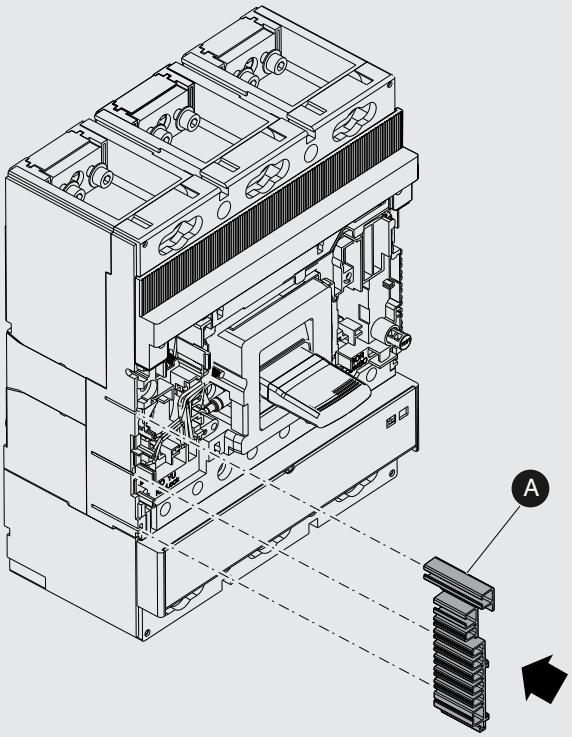

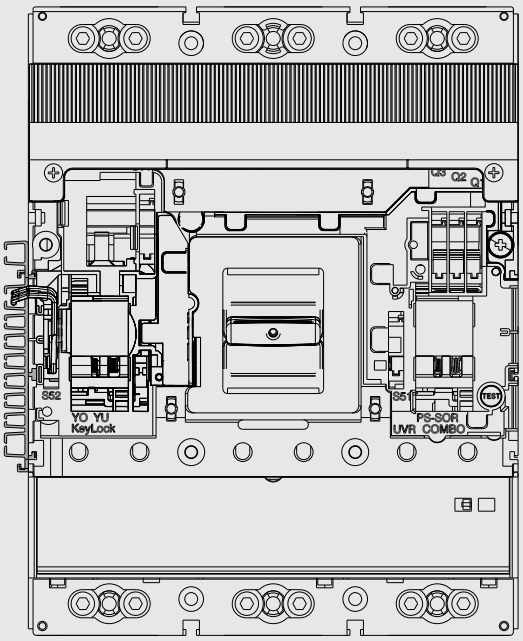

Example with S52

12 XT6

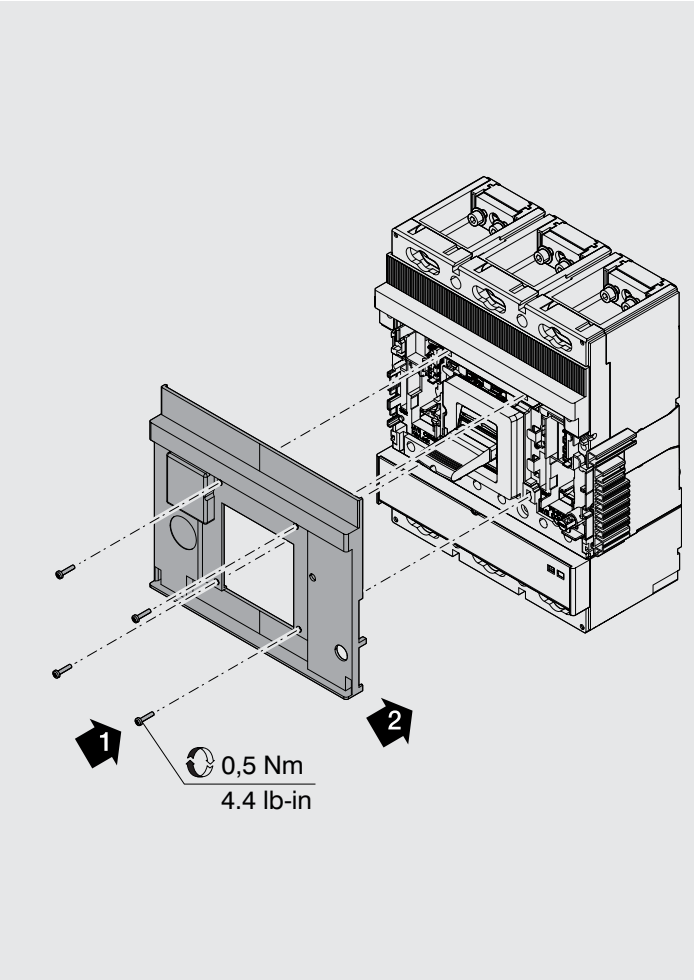

13 XT6

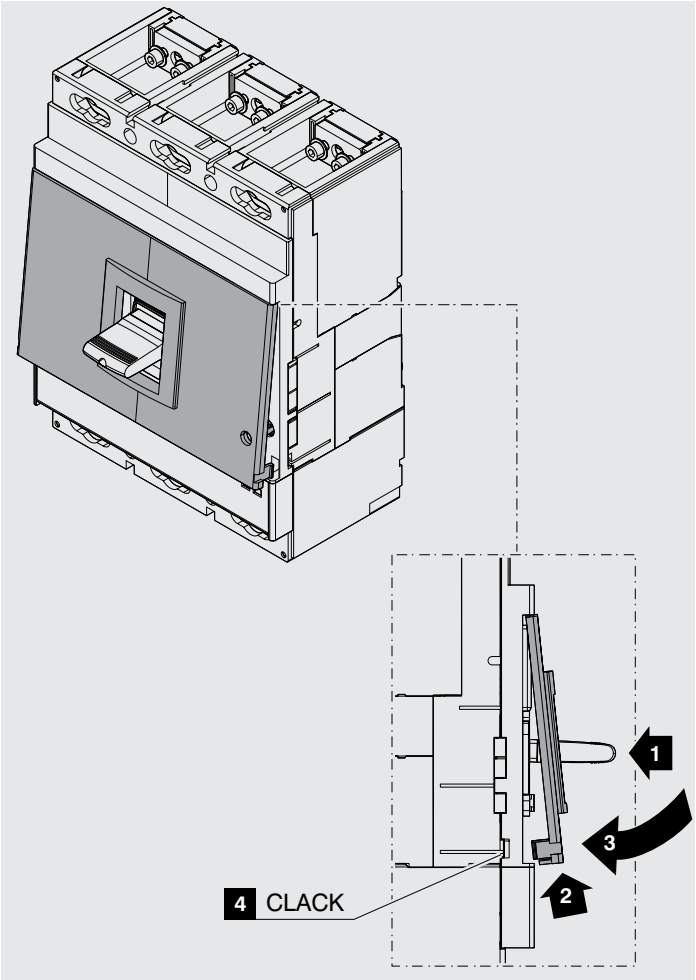

14 XT6

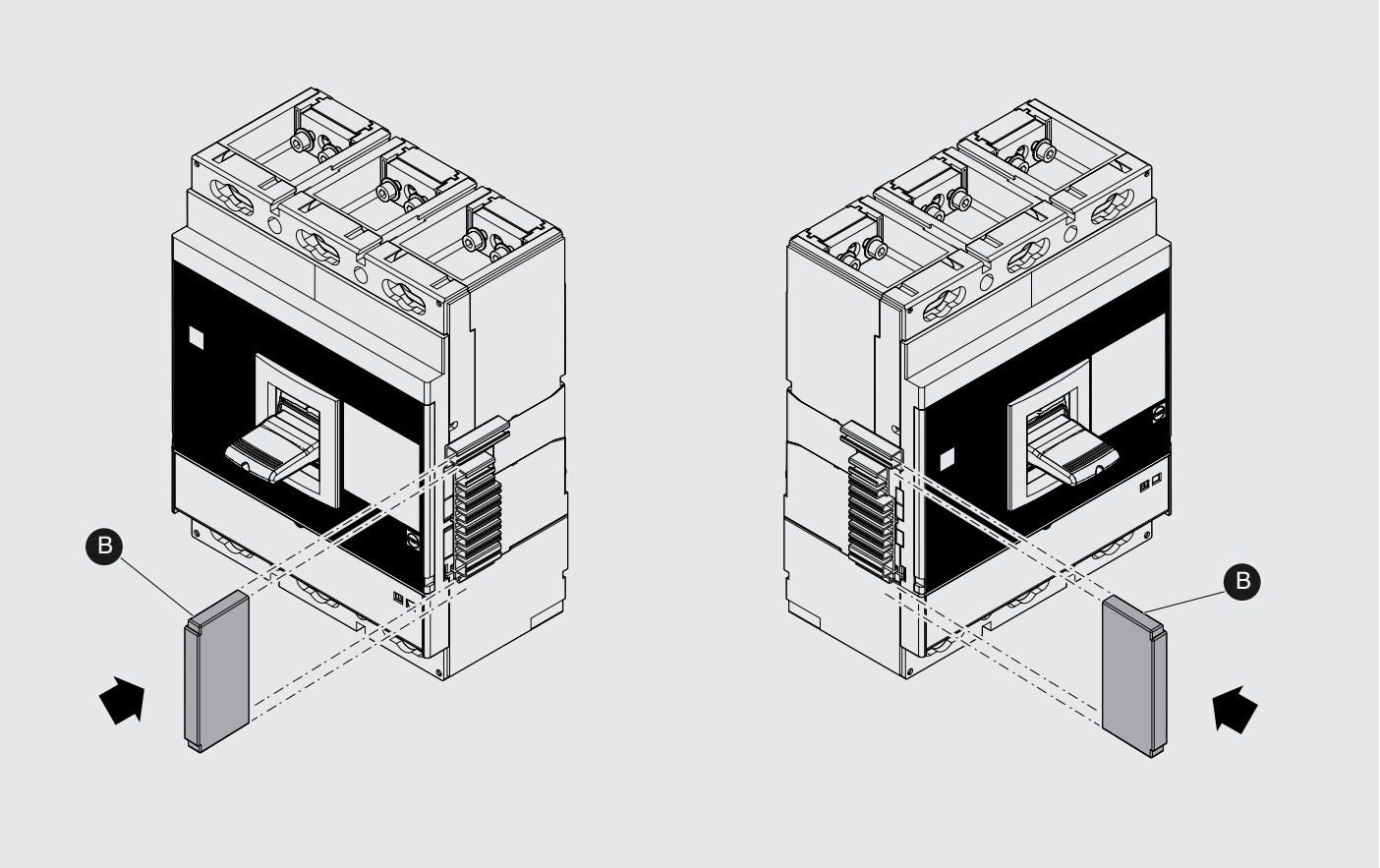

© Copyright 2019 ABB. All rights reserved.
www.abb.com