ABB Network Partner AB

1MRK 502 003-AEN

May 1997

List of contents

1 Introduction

Generators are designed to run at a high load factor for a large number of years and permit certain incidences of abnormal working conditions. The machine and its auxiliaries are supervised by monitoring devices to keep the incidences of abnormal working conditions down to a minimum. Despite the monitoring, electrical and mechanical faults may occur, and the generators must be provided with protective relays which, in case of a fault, quickly initiate a disconnection of the machine from the system and, if necessary, initiate a complete shut down of the machine.

No international standards exist regarding the extension of the protective schemes for different types and sizes of generators. The so called "common standard" varies between different countries and also between power companies within the same country, depending on their past experience and different ways in which fault statistics may be interpreted. A relay manufacturer working on the international market should, therefore, be able to offer a protective system which can be easily modified to meet different requirements from different users.

ABB's protective relays in the COMBIFLEX® system are built up of standard plug-in units and offer the following advantages:

- Great flexibility in mounting and wiring, hence, easily adapted to user's practice regarding included relays and the number of output functions. The user's requirement on contacts for tripping and external signaling, as well as indicating flags or light emitting diodes (LED's) for start and tripping functions, etc, are easily met.
- Modifications and extension can easily be made
- Pre-wired and factory tested equipment in cubicles assures easy installation and reduces commissioning work to a minimum.
- Micro-processor and static relays with low power consumption in the measuring circuits reduce the burden on CT's and, hence, the saturation effects.
- Built in testing system COMBITEST® simplifies the maintenance testing.
- The number of spare parts is reduced by using the same type of plug-in unit in several protective relays.

New modular generator protection packaging type RAGCX.
The present Generator Application Guide is written on the basis of describing applications of discrete stand alone COMBIFLEX generator protection functions. All the described functions may be delivered as separate and independent protective functions as described or as parts of an integrated modular protection system available for 19" rack-mounting or panel-mounting. The relays are available in equipment frames adapted for different mounting requirements.

Over the years thousands of machines including many nuclear generating plant installations have been equipped with COMBIFLEX plant and generator protective relays.

The new 1997 Buyer´s Guide describes a new integrated modular generator protection system type RAGCX that makes use of the protection functions described in this Application Guide. I.e COMBIFLEX modules described in here are also used in RAGCX providing a more compact arrangement mainly intended for small to medium size generators in the 5 to 150MVA range. Microprocessor technology is used in many of the new measuring modules providing extended application and an efficient use of standard high volume plug-in elements.

The RAGCX scheme allows dual redundant DC supplied protection to be built up according to the varying needs of the customers for different power plants. Since redundancy is also achieved internally within each sub-set through the use of individual protection function modules results in a very fault-tolerant package. Gas turbine generators as well as steam turbine and hydro generator protection schemes may thus be built in a very cost effective packaging not sacrificing the quality and performance that made the COMBIFLEX system well known on a world-wide basis.

2 Tripping

Tripping relays with the required number of free contacts are normally placed in the same cubicle as the protective relays. Latching relays with magnetic holding and with electrical or manual resetting can be provided

The tripping relays which are activated by the fast acting differential relays normally have contacts of a 4 ms relay connected in parallel with the heavyduty tripping contacts to shorten the operate time.

If each protective relay is provided with a separate tripping relay, the protective scheme can easily by adapted to new requirements if the power station layout is modified.

3 Indication

Each individual protective relay can be provided with flags or LED's for indication of start, tripping or faulted phase (when applicable). Generaly, several potential-free contacts are available for external functions, such as alarm, start of event recorder etc. All the signal relays with indicating flags may, if preferred, be grouped together and placed in one of the upper equipment frames.

4 Protective relays for generators and generator-transformer units

Fig. 1 shows an overview of standard protective relays for generator-transformer units. A recommended minimum of relays for different types and sizes of generators is given under section Protective relay schemes.

The numbers (26, 40 etc) used in Fig. 1 are in accordance with the standard ANSI/IEEE C 37.2 - 1979.

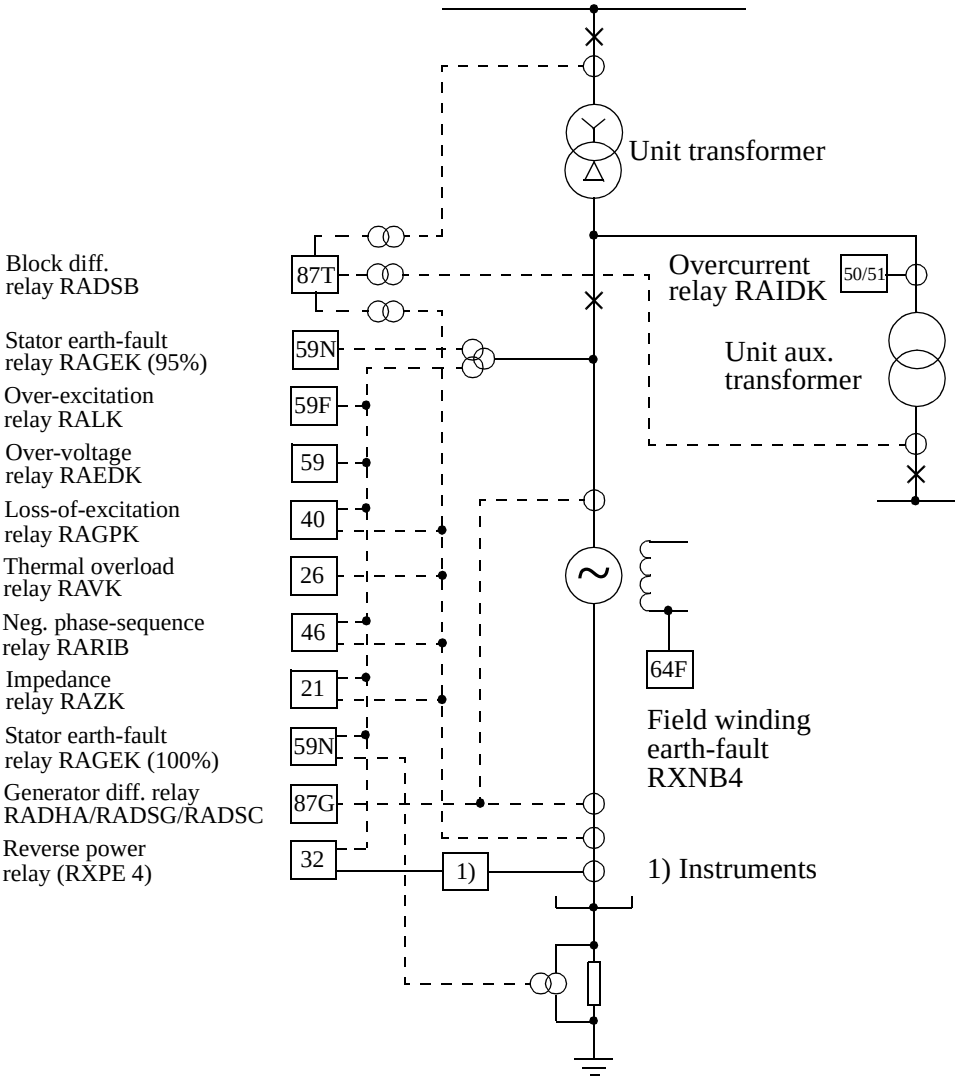

Fig. 1 Protective relays for a generator-transformer unit

5 Stator earth-fault protection

Common practice in most countries is to earth the generator neutral through a resistor, which gives a maximum earth-fault current of 5-10 A. Tuned reactors which limit the earth-fault current to less than 1 A are also used. In both cases, the transient voltages in the stator system during intermittent earth-faults are kept within acceptable limits, and earth-faults which are tripped within some few seconds will only cause negligible damage to the laminations of the stator core. The generator earthing resistor normally limits the neutral voltage transmitted from the high voltage side of the unit transformer in case of a earth-fault on the high voltage side to max. 2-3 % of rated generator phase voltage.

Short-circuits between the stator winding in the slots and the stator core are the most common electrical fault in generators. The fault is normally initiated by mechanical or thermal damage to the insulating material or the anti- corona paint on a stator coil. Interturn faults, which normally are difficult to detect, will quickly develop into an earth-fault and will be tripped by the stator earth-fault protection.

Earth-faults caused by mechanical damage may occur close to the generator neutral. Today there is a distinct trend towards providing earth-fault protection for the entire stator winding (100% stator earth-fault protection).

5.1 Stator earth-fault protection for generators with unit transformers

95 % stator earth-fault protection

A neutral point overvoltage relay, fed either from a voltage transformer connected between the generator neutral and earth or from the broken delta winding of three-phase voltage transformers on the generator line side, will depending on the setting, protect 80-95 % of the stator winding. The relay is normally set to operate at 5 % of phase voltage with a time-delay of 0,3-0,5 s. With this voltage setting, the relay protects approximately 95 % of the stator winding. It also covers the generator bus, the low-voltage winding of the unit transformer and the high-voltage winding of the unit auxiliary transformer.

95 % stator earth-fault relay RAGEK

The micro-processor based voltage relay RXEDK 2H with scale range 2 - 80 V or 10 - 320 V for stage 1 is used as 95 % relay. Stage 1 is programmable for inverse time or definite time delay, settable 50 ms to 16,1 s. The optional filter, 50 - 60 Hz sharp, has a damping factor of more than 40 for third harmonic voltages.

Stage 2, with voltage scale range 1-120 resp. 5 - 480 V can be delayed from 0,03s up to 10 s.

Single-phase relay assemblies, type RAGEK, are made up based upon the RXEDK 2H unit. For further details, see Buyer’s Guide.

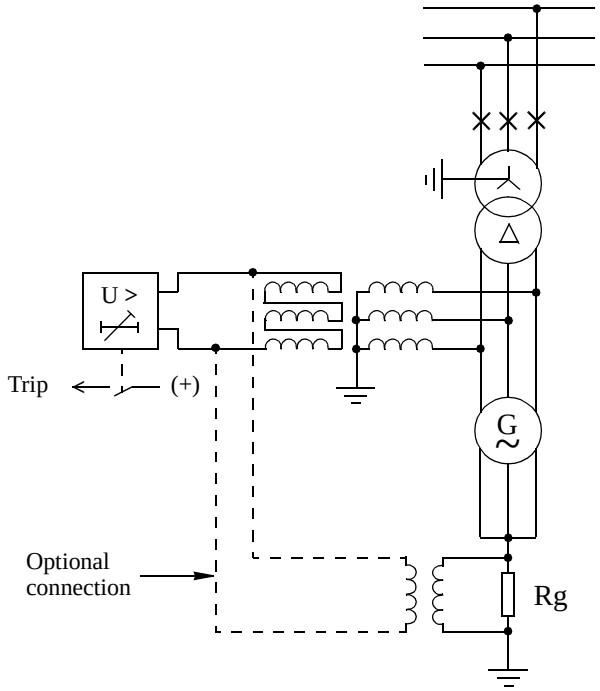

Fig. 2 95 % stator earth-fault protection

Units with generator breaker between the transformer and the generator should also have a three-phase voltage transformers connected to the bus between the low voltage winding of the transformer and the breaker. The broken delta connected secondaries are connected to a neutral point over-voltage relay, normally set to 20 - 30 % of phase voltage, which will provide earth-fault protection for the low voltage winding and the section of the bus connected to it when the generator breaker is open.

Normally, voltage limiting capacitors will be required for this bus section.

5.2 100 % stator earth-fault relay RAGEK

Generators which produce more than 1 % third harmonic voltage under all service conditions, can have the entire stator winding down to and including the neutral point protected by the 100 % stator earth-fault relay RAGEK.

The principle diagram of the relay is shown in Fig. 3. The 100 % stator earth-fault scheme includes a 95 % relay RXEDK 2H (1), which covers the stator winding from 5 % off the neutral, and a third harmonic voltage measuring relay RXEDK 2H (2), which protects the rest of the stator winding. The third harmonic voltage measuring relay connected to the generator neutral voltage transformer (3), has standard scale range of 0,2 - 24 V, 150 Hz (180 Hz for 60 Hz generators) and is provided with a desensitizing filter, which increases the basic frequency operate voltage by a factor of more than 90 for 50 Hz and more than 50 for 60 Hz voltages.

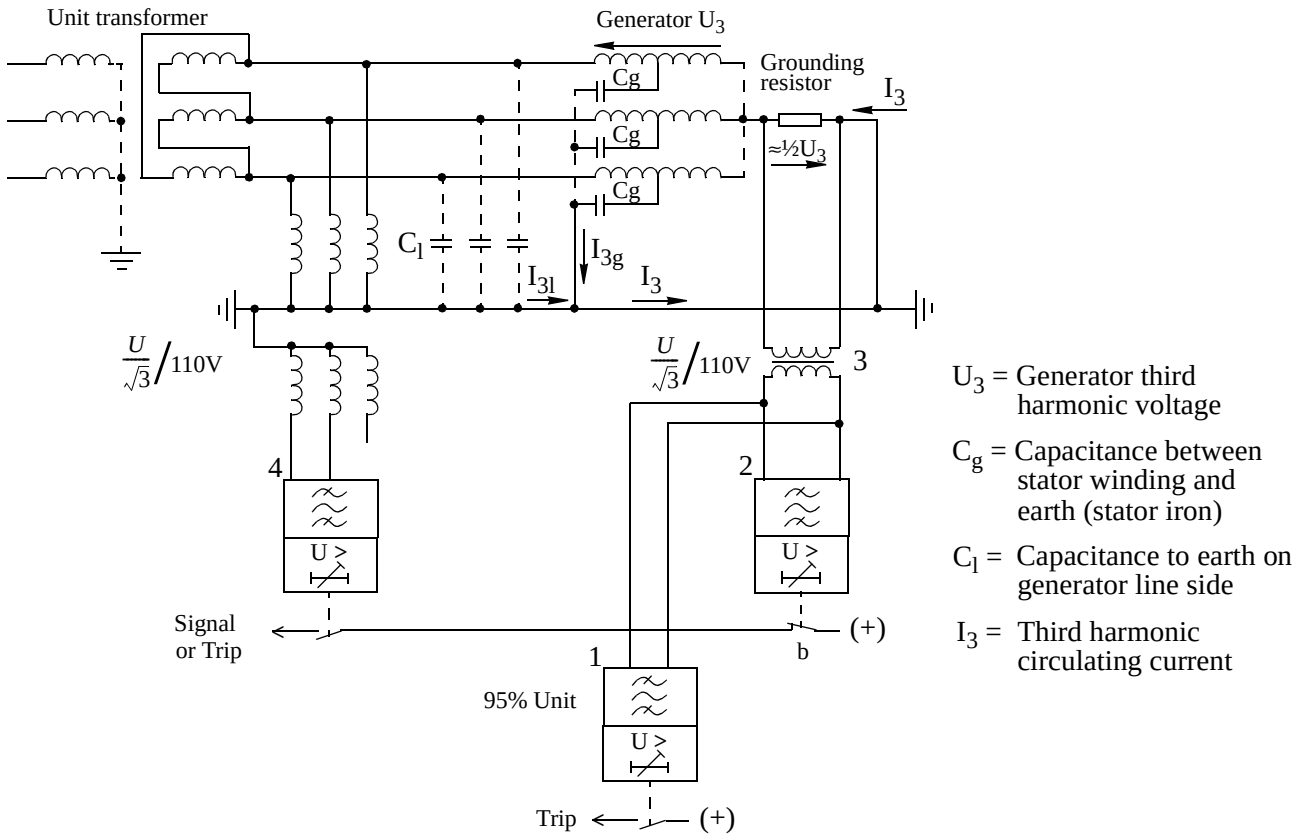

Fig. 3 100 % stator earth-fault relay RAGEK

When the generator is running and there is no earth-fault near the neutral, the third harmonic voltage relay (2) and the RXEDK 2H voltage check relay (4) are activated, and the contact (b) is open. If an earth- fault occurs close to the generator neutral, contact (b) of the third harmonic voltage relay will close and alarm or tripping is obtained.

The voltage check relay is included to prevent faulty operation of the 100% relay at generator standstill or during the machine running-up or running-down period.

For further details, see *Buyer's Guide.*

5.3 Stator earth-fault relay for generators connected directly to distribution buses

For generators connected directly to distribution buses a selective stator earth-fault protection can not be obtained by using a neutral point voltage relay, as this operates for earth-faults in the entire system which is galvanically connected to the generator.

1) Non-directional earth-fault current relay

A current selective earth-fault relay with primary operate current in most cases as low as 1-2 A, can be obtained using a low-burden, overcurrent relay type RXIG 28 and residually connected current transformers as shown in Fig. 4.

In order to secure relay stability at external faults and phase short-circuits, a neutral voltage check (3) and blocking from an instantaneous contact of the generator overcurrent or impedance relay (2) are included. The time delay is typically set to 0,3-0,5 s.

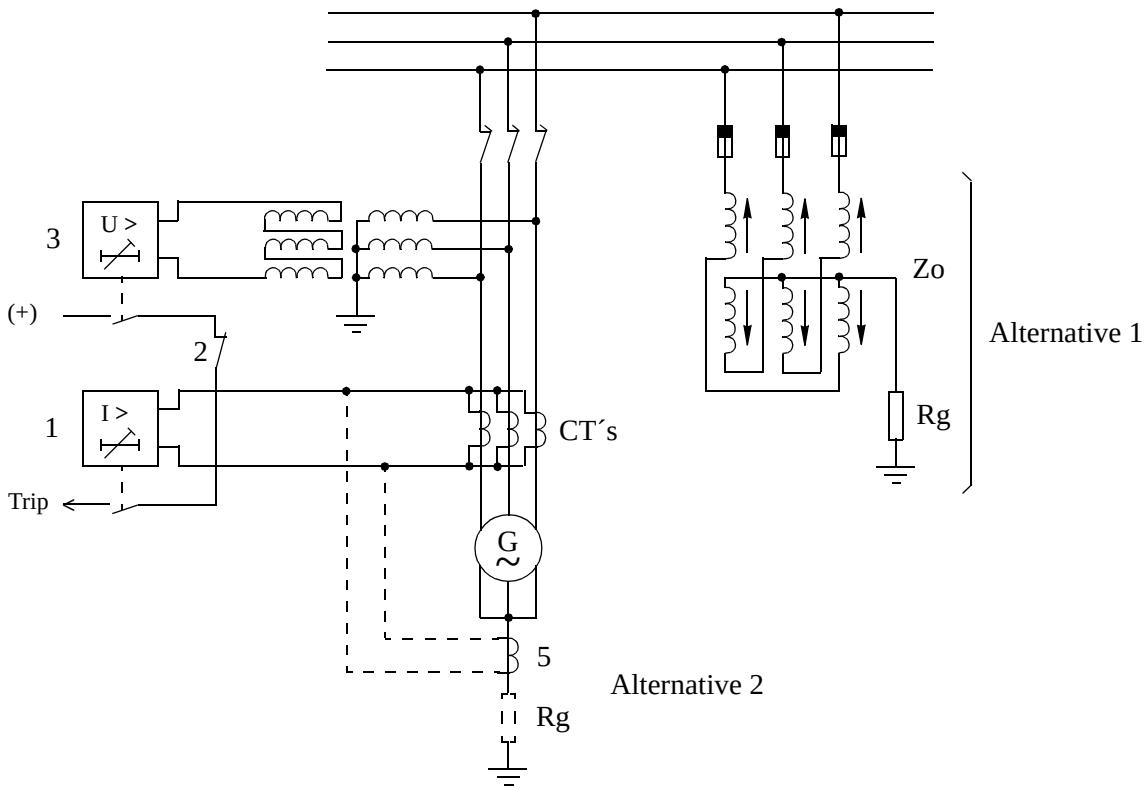

Fig. 4 Current earth-fault relay for generator connected directly to the distribution bus

If an earthing resistor is placed in the neutral of the machine, a current transformer (5) of the same type as the residually connected current transformers and with the same current ratio must also be connected in the generator neutral as indicated in Fig. 4.

The minimum setting of the RXIG 28 relay is in some cases dictated by the line-to-earth leakage capacitance of the generator and its associated outgoing cables, surge capacitors, etc. In case of an external earth-fault, this leakage capacitance gives rise to a small zero sequence current which will actuate the RXIG 28 if its setting is too low.

One common earthing resistor connected to the bus (Alternative 1 in Fig. 4) is recommended if more than one machine is connected to the bus.

For further details on the RXIG 28 relay and protection assemblies, type RAIG, see Buyer's Guide.

2) Directional earth-fault curent relay

A directional current relay residually connected to current transformers and polarised with neutral point voltage as shown in Fig. 4b will provide a selective earth-fault protection for the generator. The relay is set to operate on the active (resistive) or the capacitive component of the earth-fault current flowing from the bus into the generator in case of an earth-fault in the machine.

Resistive earth-fault current to operate the relay must be obtained from other objects connected to the bus, e.g. other generators with neutral earthing resistor, a resistor connected to an earthing transformer (Alternative 1 in Fig. 4) or a resistor connected between the neutral point and earth of a Dy-connected power transformer.

In case of an external earth-fault, the relay will not be activated by the the capacitive current due to line-to-earth leakage capacitances on the generator side of the residual connected CT's, nor the the resistive current flowing in a neutral point resistor (Rg) of the protected machine, if included.

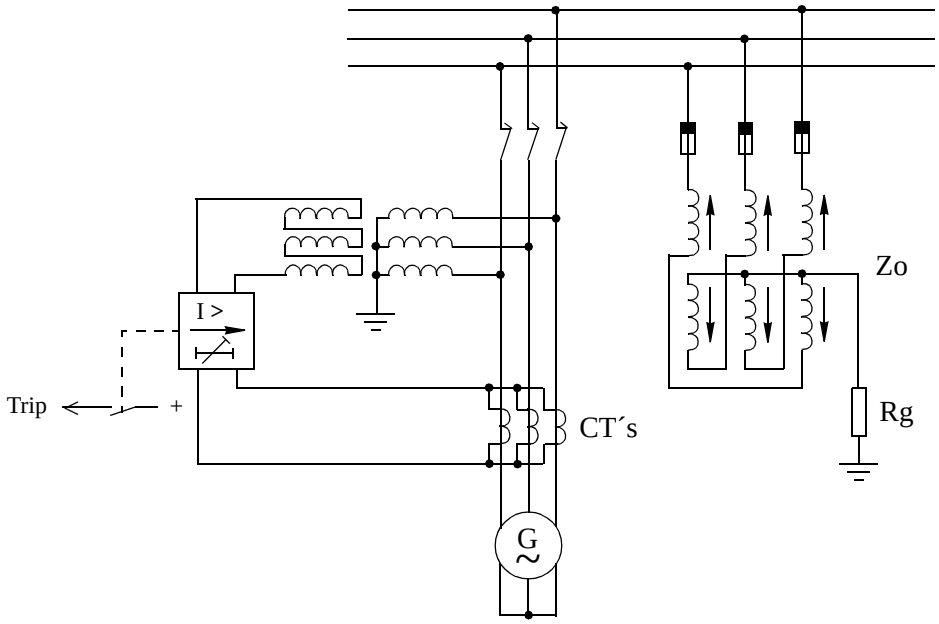

Fig. 5 Directional earth-fault relay for generator directly connected to distribution bus

5.4 Directional earth-fault current relay RAPDK

The microprocessor based voltage polarised earth-fault relay RXPDK22H for isolated or high impedance earthed systems is available in two variants with setting ranges 3,7 to 163 mA and 14,8 to 652 mA, with settable definite time delay 60 ms to 10 s. The relay can be set for measuring the resistive or capacitive component of the earth-fault current and it has a settable enable value, 5 - 30 V neutral point voltage. The relay has built-in neutral point voltage protection for back-up.

Single-phase relay assemblies, type RAPDK,are made up based upon the RXPDK 22 H units. For further details, see Buyer’s Guide.

6 Rotor earth-fault protection

The rotor circuit can be exposed to abnormal mechanical or thermal stresses due to e.g. vibrations, excessive currents or choked cooling medium flow. This may result in a breakdown of the insulation between the field winding and the rotor iron at one point where the stress has been too high. The field circuit is normally kept insulated from earth. A single earth-fault in the field winding or its associated circuits, therefore, gives rise to a negligible fault current and does not represent any immediate danger. If, however, a second earth-fault should occur, heavy fault current and severe mechanical unbalance may quickly arise and lead to serious damage It is essential, therefore, that any occurrence of insulation failure is discovered and that the machine is taken out of service as soon as possible. Normally, the machine is tripped after a short time delay.

6.1 Rotor earth-fault relay with dc injection

The rotor earth-fault relay type RXNB 4 injects a dc voltage of 48 V to the rotor field winding and measures the current through the insulation resistance see Fig. 6. When a fault occurs, a certain contribution to the injection voltage is obtained depending on the field voltage and where in the rotor winding the fault occurs.

The sensitivity of the relay, as a function of the voltage U_x, is shown in Fig. 7. A time delay of 11 s is included to prevent unwanted operation of the relay, eg. due to capacitive earth currents at the voltage increase which can arise on rapid regulation of the field voltage. A filter effectively blocks ac currents from flowing in the measuring circuit. Hence, the relay is not affected by harmonics in the field voltage.

For further details, see *Buyer's Guide.*

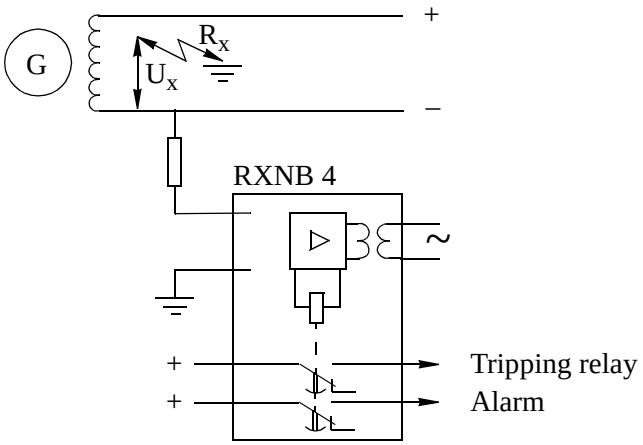

Fig. 6 Rotor earth-fault relay RXNB 4

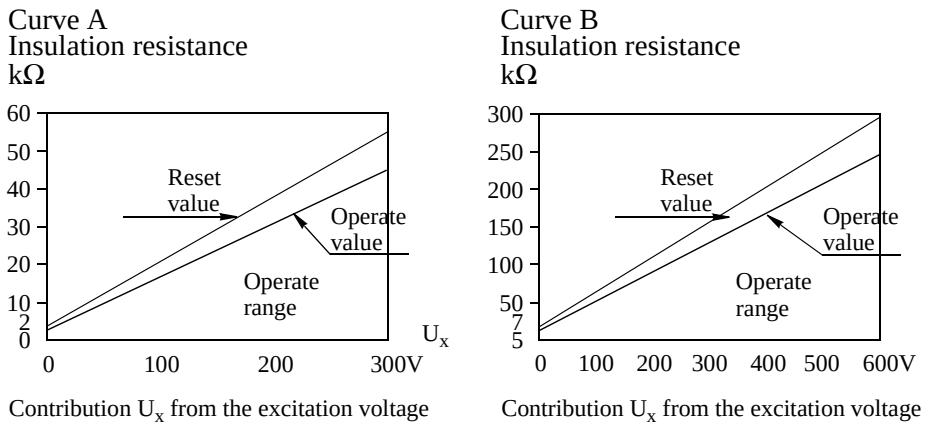

Fig. 7 Operate values for RXNB 4. Curve A is valid for the relay version 300 V and curve B is valid for relay version up to 600 V excitation voltage

6.2 Rotor earth-fault relay with ac injection

For small generators with rotating dc exciters, a suitable rotor earth-fault protection can be arranged with ac injection and a time-overcurrent relay as shown in Fig. 8. With current setting 15 mA , the protection operates for earth- faults with fault resistance up to about 3 kΩ, independent of fault location.

The capacitance between the field circuit and earth should not exceed 0,5µF. The 4µF coupling capacitor should have test voltage 5 kV dc between terminals and between terminals and earth.

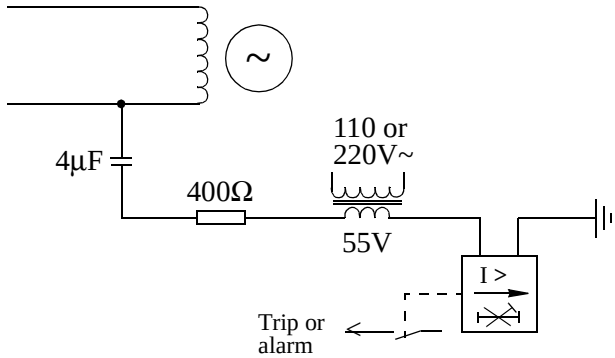

Fig. 8 Rotor earth-fault relay with ac injection

6.3 Time-overcurrent relay RAIDG

The micro-processor based time-overcurrent relay RXIDG 2H has current scale range 15 mA to 2,6 A and a logarithmic inverse time delay. At maximum earth-fault resistance, for which the relay operates, the time delay is 5,8 s. The minimum operate time can be set in the range 1 to 2 s.

Single-phase relay assemblies,type RAIDG, are made up based upon the RXIDG 2H unit. For further details, see Buyer’s Guide.

7 Phase short-circuit protection

In case of short-circuits between phases in the stator winding or between the generator terminals, the machine must quickly be disconnected from the network and brought to a complete shutdown in order to limit the damage. Phase short-circuits on the generator bus, in the unit transfommer or in the high voltage winding of the unit transformer, must also be quickly disconnected from the network. The generator must be brought to a complete shutdown in case of a transformer fault if there is no circuit-breaker between the machine and the transformer.

Although statistics show that phase short-circuits is one of the rare types of fault in generators and generator-transformer units, it is considered necessary to have fast-acting phase short-circuit protection for all units with rating higher than 5-10 MVA. With known technique, this can only be obtained by means of differential relays. Back-up protection, in the form of an impedance relay or an undervoltage relay with overcurrent start, should be provided. For the smallest units no differential relay is provided, and the impedance or voltage/current relay becomes the main protection. Overcurrent relays can be used if the sustained fault current is sufficiently high to secure operation.

7.1 Generator differential relays

For modern generators, the time constant of the dc component in the short-circuit current is large, typically more than 200 ms. The risk of saturation of the current transformers in case of external short-circuits is obvious. It is, therefore, important that the generator differential relay remains stable even when the current transformers are heavily saturated.

For small and moderate size generators, ABB uses the high impedance stabilized type of differential relay. For machines with rating above 250 - 300 MVA, the percentage stabilized, moderate impedance type is used. Both types are fast-operating, highly sensitive relays which, in case of external short-circuits, are completely stable even in case of fully saturated current transformers.

The principle of the RADHA high-impedance differential relay is shown in Fig. 9. The current transformers on the generator neutral and the line side shall have identical turns ratio and similar magnetizing characteristics. Hence, under normal service conditions and external faults with unsaturated current transformers, the voltage U_{re} across the relay measuring circuit is negligible.

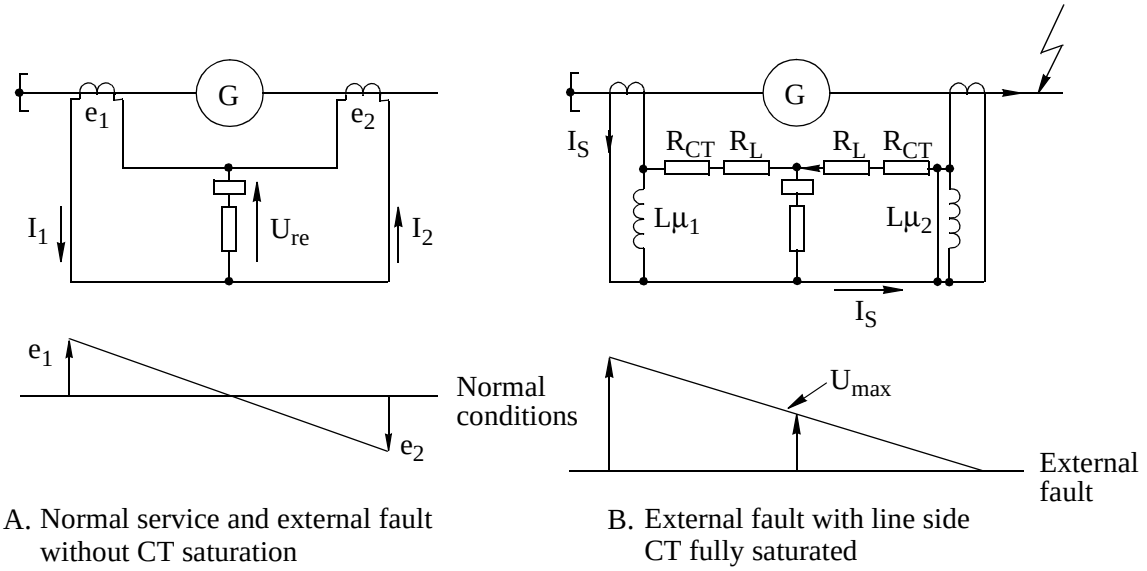

Fig. 9 The high impedance measuring principle

In case of an external short-circuit, one of the current transformers may saturate more than the other. The worst case will be if one is completely saturated and the other is completely unsaturated. The maximum voltage across the relay will be:

$U_{max} = I_s'' (R_{CT} + R_L)$ where

I_s'' = secondary subtransient short-circuit current, symmetrical (ac) component

R_L = resistance of pilot wire between current transformer (CT) and relay

R_{CT} = resistance of the secondary winding of the saturated current transformer

The relay operate voltage is set higher than U_{max}

The minimum operate current depends mainly on the voltage setting of the relay, the magnetizing characteristics and the current ratio of the CTs.

For internal faults, with fault current equal to or above the minimum operate value of the relay, the voltage across the relay goes up to the full satration voltage of the CTs and the relay operates in 10 -15 ms.

A voltage dependent resistor across the differential relay limits the voltage to a safe level.

The primary operate current is normally between 1-5 % of rated generator current. The relay requires dedicated CT cores.

For further details, see *Buyer's Guide.*

The principle diagram of the measuring circuits of RADSG percentage differential relay is shown in Fig. 10. Relays d_R and S_R operate in less than 1 ms in case of severe internal faults. The impulse storing circuit across the coil of the 4 ms output relay (1) secures operation if the d_R and S_R relay contacts are closed for more than 0,3 ms, and the output relay becomes selfholding when it operates. The function of the RADSG relay is, therefore, not affected by current transformer saturation in case of internal faults.

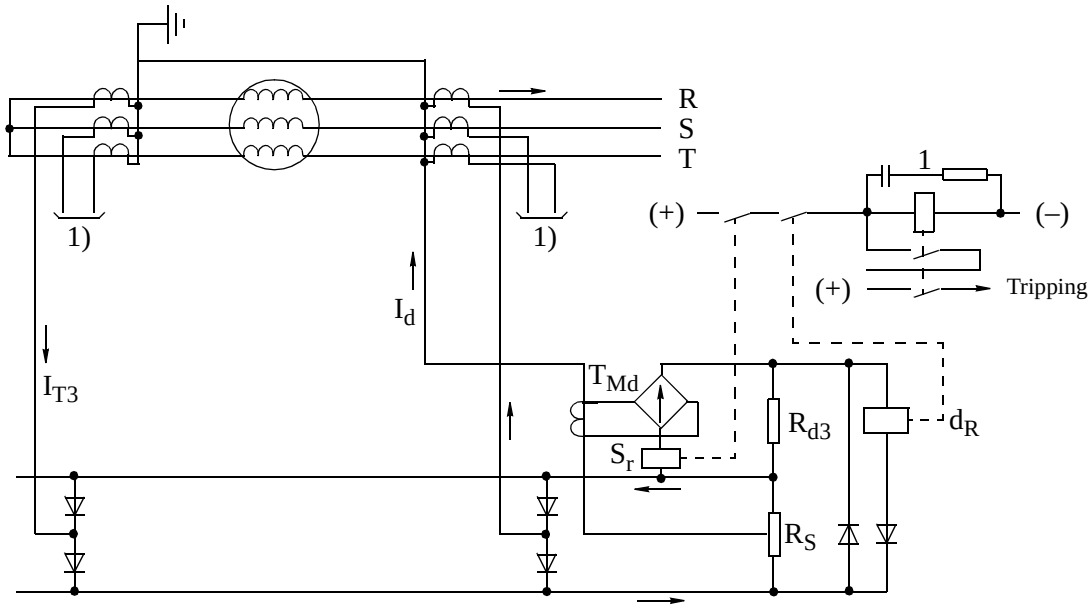

1) To measuring circuits for phase S and T

Fig. 10 The RADSG generator differential relay. Principle diagram

The minimum operate current can be set as low as 3 % of rated generator current.

If the current transformer saturates during an external fault, a certain current I_d will flow in the differential circuit. The d_R relay remains stable as long as the ratio I_d/I_{T3} is below the set stability limit (normally 20 %). The ratio I_d/I_{T3} is determined by the ratio of the resistance in the differential circuit to the resistance in the circuit with the saturated current transformer. Hence, the conditions for complete stability in case of external faults are easily determined

For further details, see *Buyer's Guide.*

The RADSC relay is used when the low impedance, percentage restrained type is requested as generator differential relay. The lowest setting of RADSC is 15 % of rated current and the operate time is approx. 20 ms at

2 times set restraint operate value. An unrestrained function, settable 5, 10 or 15 times rated current gives fast tripping for severe generator faults with large fault currents.

For further details, see Buyer's Guide.

7.2 Generator and unit transformer differential relay

The transformer differential relay RADSB is used for generator-transformer units. It is a static relay with threefold restraint:

1. Through-fault restraint for external faults

2. Magnetizing inrush restraint

3. Over-excitation restraint to counteract operation at abnormal magnetizing currents caused by high voltage

The magnetizing inrush restraint is required to keep the relay stable when a nearby fault on an adjacent feeder is cleared.

During the time of the fault, the terminal voltage of the main transformer is practically zero and at the instant of fault clearance, i.e. when the circuit-breaker of the faulty feeder opens, the transformer terminal voltage quickly rises. This may cause severe magnetizing inrush currents.

For generator-transformer units with separate generator breaker, the inrush restraint is also required when the unit transformer is energized from the H.V. bus.

The over-excitation restraint is important for generator-transformer differential relays. Without this restraint, there is an obvious risk that the differential relay may trip the generator due to overvoltage if a substantial part of the load is disconnected when clearing a fault. The voltage then rises immediately and remains high until the automatic voltage regulator (AVR) of the machine has brought it back to the normal value.

For normally designed transformers with grain-oriented core, the RADSB relay remains stable up to about 140% of rated voltage.

In addition to the restrained function, the relay has also a high set, unrestrained differential current measuring circuitry. The unrestrained operation must be set higher than the maximum inrush current of the transformer. It gives fast tripping (10 - 20 ms) for severe faults with large fault current.

For further details, see *Buyer's Guide.*

7.3 Phase short-circuit back-up relays

As a back-up short-circuit protection, a three-phase overcurrent relay with definite or inverse time-delay can be used if the generator short-circuit current without any doubt gives operation of the relay. This is normally the case for generators with excitation system not supplied from the generator bus and with the AVR in service.

In the case of a static excitation system, which receives its power from the generator terminals, the magnitude of a sustained phase short-circuit current depends on the generator terminal voltage. In case of a nearby interphase fault, the generator terminal voltage drops and the fault current may fall below the setting of the overcurrent relay within a few seconds as shown in Fig. 11.

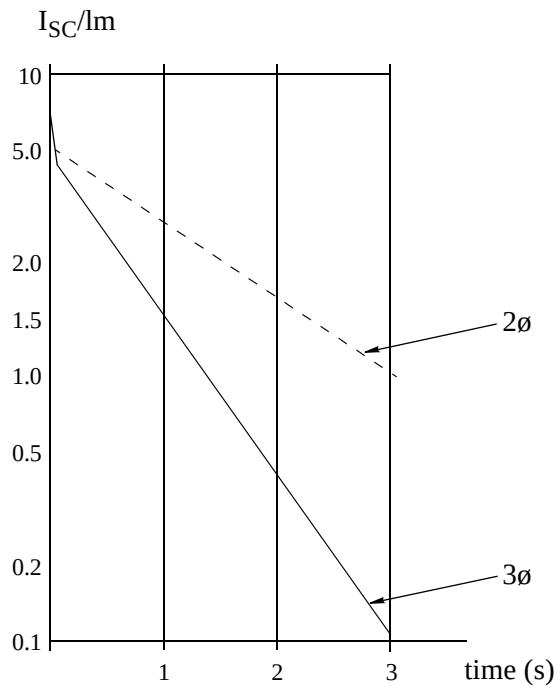

Fig. 11 Exemple on dependence of short-circuit current for generator with excitation system fed from generator bus in case of short-circuit close to the generator terminals

The short-circuit current may drop below rated current after 0.5 - 1 s also for generators with excitation system not fed from the generator terminals if the fault occurs when the automatic voltage regulator is out of service. For this reason, an impedance measuring relay is generally recommended for back-up short-circuit protection.

The impedance relay is normally connected to current transtormers on the generator neutral side to provide back-up also when the generator is disconnected from the system. At reduced voltages, the current required for operation will be reduced. At zero voltage, operation is obtained with a current of less than 20 % of rated relay current.

7.4 Impedance relay RAZK

The micro-processor based impedance relay RXZK 22H has two impedance measuring stages and definite time delay. The impedance measuring characteristic is polygonal with independent setting of the reach in the X and R directions, see Fig. 12.

Impedance stage Z1 is set to reach only into the unit transformer and will provide a fast back-up protection for phase short-circuits on the generator terminals, the generator bus and the low voltage winding of the unit transformer. It should be observed that with this low setting, the relay protects only the part of the stator winding which is close to the terminals. The relay should measures phase currents and voltage between phases to measure correctly the short-circuit impedance in case of two-phase faults.

Impedance stage Z2 is normally set to operate at 70 % of rated generator load impedance, corresponding to an operate current of 1/0.7=1.4 times rated current at rated voltage. The selectivity against other relays in the network has to be secured by a proper time delay setting.

Three-phase relay assemblies RAZK are made up based upon the RXZK22H units. For further details, see *Buyer's Guide*.

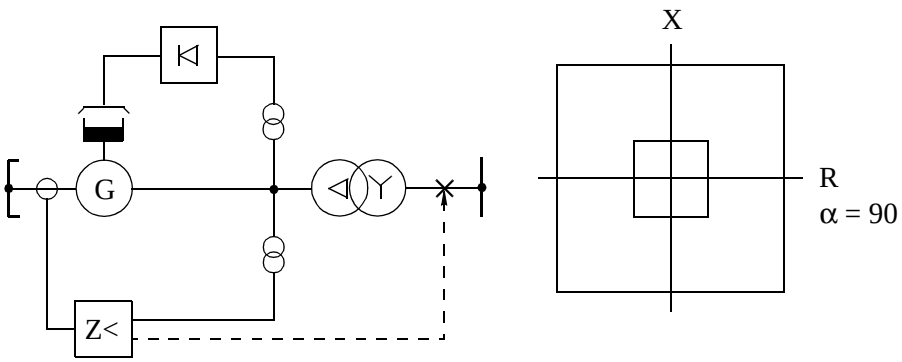

a) Connection of relay b) Operate characteristic, α = 90

Fig. 12 Impedance relay

8 Phase interturn short-circuit protection

Modern medium size and large size turbo-generators have the stator winding designed with only one turn per phase per slot. For these machines, interturn faults can only occur in case of double earth-faults or as a result of severe mechanical damage on the stator end winding. The latter is considered rather unlikely to occur.

Even hydro-generators above a certain size normally have their stator winding designed with one turn per phase per slot.

In ABB generators, multiturn windings are used in some cases for machines up to about 50 MVA.

It is generally considered difficult to obtain a reliable protection against short-circuiting of one turn if the stator winding has a large number of turns per phase.

For generators with split neutrals, the conventional inter-turn fault protective scheme comprises a time delayed low-set overcurrent relay which senses the current flowing in the connection between the neutrals of the stator winding, see Fig. 13. The fault current can be extensively large in case of interturn faults, hence, the time delay must be short, 0,2 to 0,4 s, and the overcurrent relay must be set higher than the maximum unbalanced current flowing between the neutrals in case of an external short-circuit. The maximum unbalanced current in case of external faults and the minimum unbalanced current for single-turn short-circuits have to be obtained from the manufacturer of the machine.

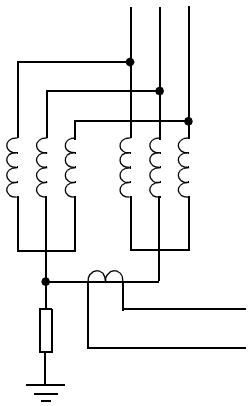

Fig. 13 Connection of interturn short-circuit protection

Due to the difficulties in obtaining a reliable and secure interturn protection, it is in most cases omitted. It is assumed that the interturn fault, first of all, will lead to a single phase earth-fault at the faulty spot, and the machine will then be tripped by the earth-fault relay within 0,3 - 0,4 s.

8.1 Interturn short-circuit current relay RAIDK

The micro-processor based time-overcurrent relay RXIDK 2H is used for the interturn protection acc. to Fig. 13. For this application, the relay is provided with an optional filter which gives a damping factor of more than 40 for third harmonic currents. Current stage 1 of the relay is programmable for five different inverse time characteristics and definite time delay. Normally, a definite time delay of 0,3-0,5 s is used.

Relay assemblies, type RAIDK, are made up based upon the RXIDK 2H units. For further details, see *Buyer's Guide.*

9 Thermal overload protection

Overloads up to 1.4 times the rated current are not normally detected by the impedance or overcurrent protection. Sustained overloads within this range are usually supervised by temperature monitors (resistance elements) embedded at various points in the stator slots. The temperature monitoring system enables measurements measuring points.

As an additional check of the stator winding temperature, an accurate thermal overload reay may be used. With modern relays, it is possible to obtain relay time-constants down to some few minutes, which is required for adequate thermal protection of directly cooled machines.

The temperature rise of the stator winding is, in addition to the magnitude of the current, also influenced by the coolant flow, the coolant temperature, etc. The current overload relay can, therefore, not be expected to give an exact measurement of the winding temperature under all conditions.

9.1 Thermal overload relay RAVK

The micro-processor based thermal overload relay RXVK 2H has a thermal time constant (settable in the range 2-62 minutes in steps of 2 minutes and a current stage with dependent time delay, settable 0,03 - 5 s. The relay has output contact for alarm when the measured thermal content is 95 % of operate value.

Single and multiphase protection assemblies, type RAVK, are built up based upon the RXVK 2H units. For further details, see Buyer’s Guide.

10 Negative phase-sequence current protection

When the generator is connected to a balanced load, the phase currents are equal in magnitude and displaced electrically by 120°. The ampere-turns wave produced by the stator currents rotate synchronously with the rotor and no eddy currents are induced in the rotor parts.

Unbalanced loading gives rise to a negative sequence component in the stator current. The negative-sequence current produces an additional ampere-turn wave which rotates backwards, hence it moves relatively to the rotor at twice the synchronous speed. The double frequency eddy currents induced in the rotor may cause excessive heating, primarily in the surface of cylindrical rotors and in the damper winding of rotors with salient poles.

The approximate heating effect on the rotor of a synchronous machine for various unbalanced fault or severe load unbalance conditions is determined by the product I_2^2 t = K, where I_2 is the negative sequence current expressed in per unit (p.u.) stator current, t the duration in seconds and K a constant depending on the heating characteristic of the machine, i.e., the type of machine and the method of cooling adopted.

The capability of the machine to withstand continously unbalanced currents is expressed as negative sequence current in percent of rated stator current.

Typical values for generators are given in Table 1 .

Table 1:

Type of generator	Max. permitted $K = I_2^2 t$ (seconds)	Max. permitted continuous I_2 (percent)
Cylindrical rotor:		
indirectly cooled	30	10
directly cooled	5-10 [1)]	8 [1)]
Salient pole:		
with damper winding	40	10
without damper winding	40	5

') The lower values are typical for large machines (P >800 MVA)

Single-phase and, especially, two-phase short circuits give rise to large negative sequence currents. The faults are, however, cleared by other relays in a time much shorter than the operate time of the negative sequence relay. E.g. a two-phase shortcircuit with fault current equal to 3.46 times rated generator current implies a negative sequence current component equal to twice the rated current (2 p.u). Hence, a negative-sequence relay with the setting I_2^2 t = 10 s would trip with a time delay of 10 / 2^2 = 2,5 s.

Examples on load dissymmetries which give rise to negative-sequence currents in the generator are:

- Unbalanced single-phase loads, such as railroads and induction furnaces
- Transmission line dissymmetries due to non-transposed phase wires or open conductor (circuit-breaker pole failure)

An open conductor may give rise to a considerable negative-sequence current, as a maximum of more than 50 % of rated machine current. The combination of two or more of the above mentioned dissymmetries can give rise to harmful negative phase sequence currents, even if each of them gives rise to a relatively small unbalance. It is, therefore, considered as good engineering practice to provide negative-sequence current protection for all, but the small size generators.

10.1 Negative-sequence current relay RARIB with thermal memory

The diagram in Fig. 14 indicates the measuring functions in RARIB and the setting ranges.

The power consumption in the current sequence filter (2) is only 0.1 VA/phase. The input current to the relay measuring circuit is adapted to the rated generator secondary current by the aid of the potentiometer (3).

The measuring unit for I^2 t has the setting range 1-63 s in steps of 1 s. The unit is provided with a thermal memory and the cooling down time of the relay is settable in 7 steps in the range (2,65 - 170) x k. The blocking relay resets when the heat content in the memory is 50 % of the tripping level.

The memory function secures adequate protection, even in case of repeated periods of unbalanced loading which eventually results in excessive heating of the machine, if it is not tripped.

For further details, see *Buyer's Guide*
.

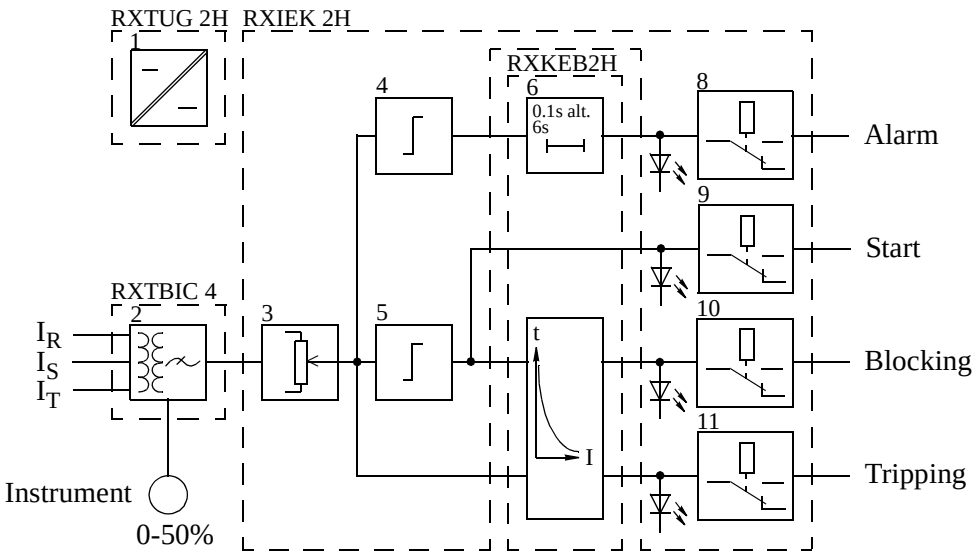

Fig. 14 Negative phase-sequence relay RARIB

11 Loss-of-excitation protection

A complete loss-of-excitation may occur as a result of:

- unintentional opening of the field breaker
- an open circuit or a short circuit of the main field
- a fault in the automatic voltage regulator (AVR), with the result that the field current is reduced to zero

When a generator with sufficient active load looses the field current, it goes out of synchronism and starts to run asynchronously at a speed higher than the system, absorbing reactive power (var) for its excitation from the system.

The maximum active power that can be generated without loss of synchronism when the generator looses its excitation depends on the difference between the direct axis and quadrature axis synchronous reactances. For generators with salient poles, the difference is normally sufficiently large to keep the machine running synchronously, even with an active load of 15-25 % of rated load.

For turbo-generators with cylindrical rotor, the direct and quadrature axis reactances are practically equal, and the machine falls out of synchronism even with a very small active load. The slip speed increases with the active load.

The stator end regions and parts of the rotor will be overheated, if the machine is permitted to run for a long time at high slip speeds. The maximum permitted hot spot temperature is, for most turbo qenerators, obtained by running the machine continously unexcited with an active load of 20 - 35 %.

The generator terminal voltage varies periodically due to the large variation in the reactive current taken from the network. The low voltage intervals could make the generator auxiliary induction motors stall, which would lead to a complete shutdown of a thermal power station.

Reduced excitation, causing excessive heating at the end region of the stator core, may be obtained during normal system condition, when there is a continous tendency towards an increasing system voltage (dropping of reactive loads). In that case, the normal automatic voltage regulator (AVR) action will reduce the field excitation.

The normal working characteristic of a typical turbogenerator is shown in Fig 15. The curve A-B-C-D represents the capability limit, beyond which the machine is not normally allowed to work. The apparent power vector S represents rated power at rated power factor (PF = 0,8).

If the system voltage should start to increase steadily, the field excitation would be reduced correspondingly by the normal operation of the AVR. The point of vector S then moves along the vertical line BH. Continous operation below the line DC causes severe local heating of the stator end structure owing to an end leakage flux, which enters and leaves the stator

core perpendicular to the lamnations. In exceptional cases, this may cause blue-ing of iron parts of the end structure, or charring of the armature winding insulation.

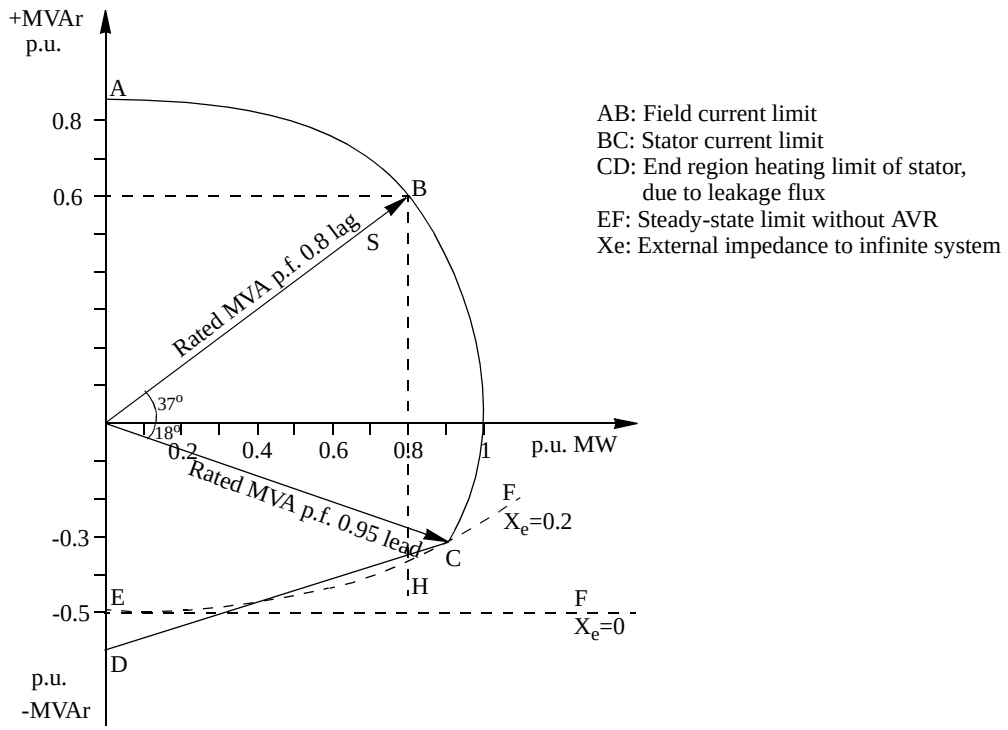

Fig. 15 Typical capability curves for round rotor turbo-generator

The minimum excitation required to ensure synchronism is termed theoretcal stability limit. A safety margin is normally added to get a practical stability limit.

When an automatic voltage regulator (AVR) with fast response and no dead band is in service, the safe limit may approach the theoretical value. For medium size and large size generators the automatic voltage regulator (AVR) normally has a control function, which prevents it from lowering the excitation current beyond the safe limit (negative var limiter).

11.1 Loss-of-excitation relay RAGPK

The function of the RAGPK loss-of-excitation relay is explained with reference to Fig. 16.

The relay RXPDK comprises a directional current stage (Iα), with characteristic angle settable -120° to +120° and a nondirectional current stage (I>).

The dircetional current operate characteristic of RXPDK is normally set to coincide as close as possible with the thermal capability curve for the underexcited generator. For generators with negative var limiter, RXPDK is set to give back-up for the limiter. The current operate characteristic can, alternatively, be set to coincide as close as possible to the stability limiting curve for the generator, when run with constant field current (the AVR out of service).

The dircetional current stage is programmable for five inverse time characteristics or definite time. A typical setting is 2 s definite time.

A potential-free contact on RXPDK is used to provide a signal when the generator is run outside its thermal capability (or stability) range.

The RAGPK loss-of-excitation relay also comprises an undervoltage relay RXEDK 2H. Tripping is obtained when the directional current stage operates simultaneously with the undervoltage or the overcurrent function (or both). The undervoltage relay is normally set to 90 % of rated generator terminal voltage and the overcurrent stage I> is normally set to 110-115 % of rated generator load current.

For further details, see *Buyer's Guide.*

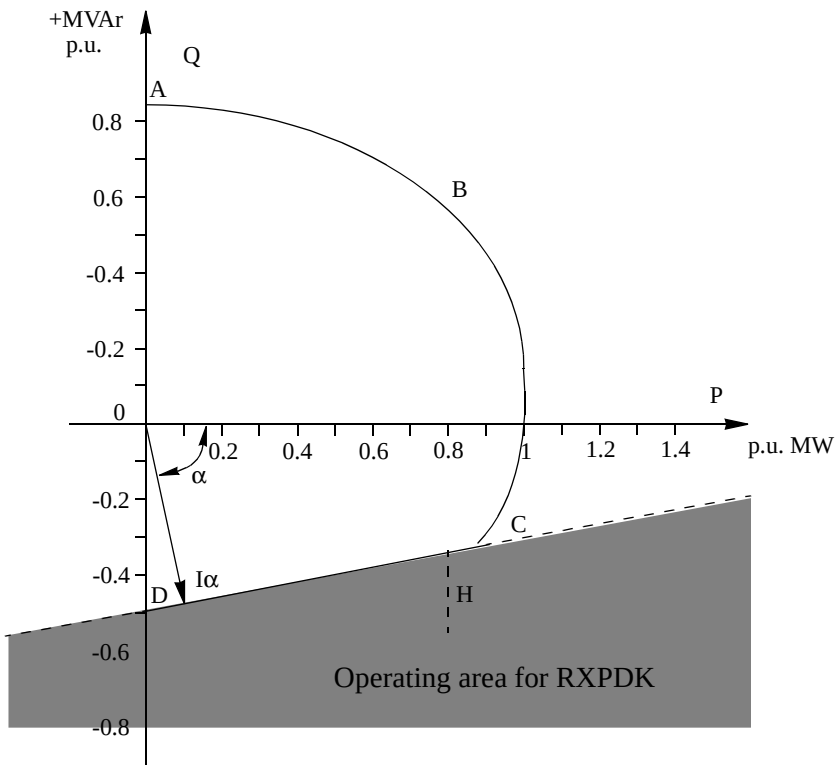

RXPDK relay setting for
a typical turbo-generator

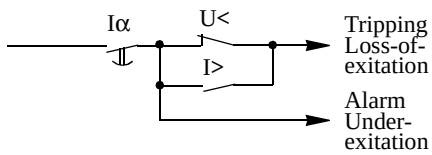

Basic tripping circuit of RAGPK

Fig. 16 The RAGPK relay

11.2 Comparison between RXPDK and the offset-mho relay

An alternative method for detection of loss of excitation is the use of an impedance relay with offset mho characteristic. The relay characteristic is centered on the negative reactance axis, and is usually offset by 50 % of the transient reactance X'. The diameter of the circle is normally set equal to or slightly greater than the generator svnchronous reactance X_d .

A large number of calculations with the MOSTA computer program for simulation of power system transients has shown that the RXPDK relay, in case of loss-of-field, operates before the generator terminal voltage drops below 80 % of rated value. In Fig. 17, the operate characteristic of a RXPDK relay with setting I = 43 % of rated current, at voltages 100 % and 80 % of rated generator terminal voltage, is shown in the impedance plane together with the operate characteristic of an offset mho relay.

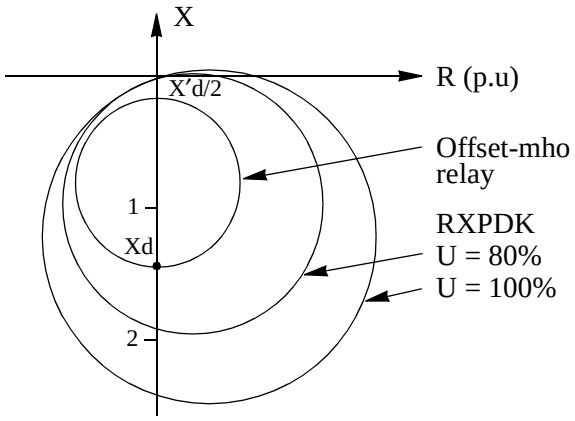

Fig. 17 Operate characteristics of loss-of-excitation relays

The generator transient reactance X ' = 33%, the synchronous reactance X_d = 130% and the offset mho relay is set in accordance with the rules stated above.

The figure shows that the RXPDK relay operates with a larger dependability than the offset-mho relay in case of loss of-excitation.

12 Over-excitation protection

The excitation flux in the core of the generator and connected power transformers is directly proportional to the ratio of voltage to frequency (V/Hz) on the terminals of the equipment. The losses due to eddy currents and hysteresis and hence, the temperature rise, increase in proportion to the level of excitation.

The core laminations can withstand relativey high overfluxing without becoming excessively heated, but unlaminated metallic parts can experience severe heating in a short time.

An example on the V/Hz capability curve for a generator and the unit transformer is shown in Fig. 18. The combination of a definite time-delay stage and a suitable inverse time will match the combined characteristic quite well.

Most international standards for power transformers specify a limit of maximum 5 % continous overexcitation (overfluxing) at rated load current and maximum 10 % overfluxing at no load.

As long as the generator-transformer unit is connected to the network, the risk of over-excitation is relatively small. However, when the generator-transformer unit is disconnected from the network, there is an obvious risk for over-excitation, mainly during generator start up and shut down. From cases reported in existing literature it can be concluced that overfluxing occurs relatively often compared to the number of other electrical incidents.

The risk of overexcitation is, obviously, largest during periods when the frequency is below rated value. Hence, overvoltage relays cannot be used to protect the generator-transformer unit against overfluxing. The proper way of doing this is to use a relay which measures the ratio between voltage and current (V/Hz relay).

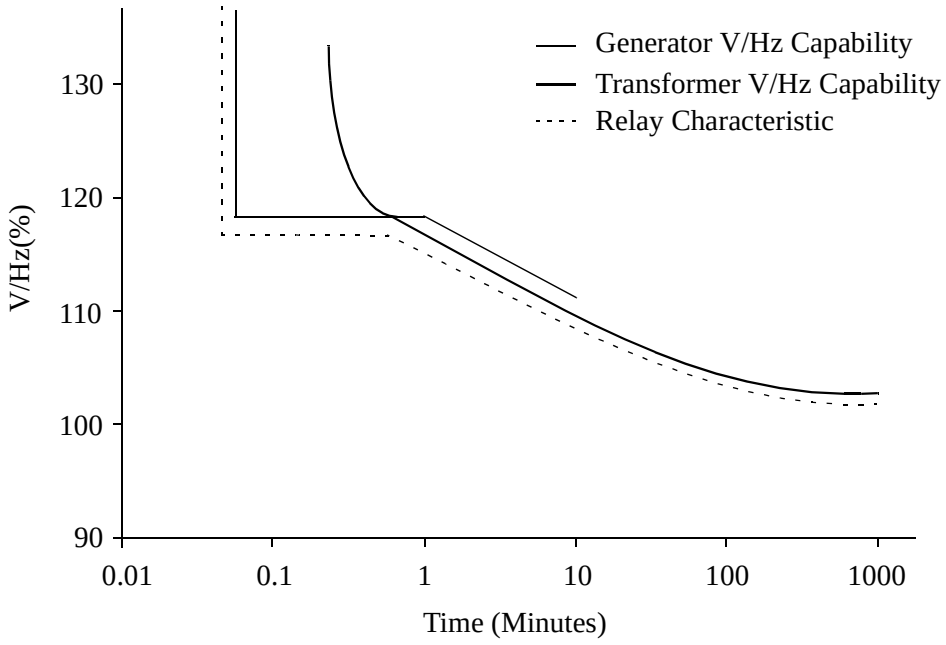

Fig. 18 V/Hz characteristics for generator-transformer unit

12.1 Over-excitation relay RALK

The micro-processor based over-excitation relay RXLK 2H has two V/Hz measuring stages with time delay and wide setting range: 0,2-9,6 V/Hz. Stage 1 is programmable for five different inverse time characteristics and definite time delay, settable 1-200 min. Stage 2 is definite time delayed.

The relay provides a precise measurement of the relationship between voltage and frequency within the frequency range 5 -100 Hz.

Relay assemblies,type RALK, are made up based upon the RXLK 2H unit. For further details, see Buyer's Guide

13 Over-voltage protection

During the starting up of a generator, prior to synchronisation, the correct terminal voltage is obtained by the proper operation of the automatic voltage regulator (AVR). After synchronisation, the terminal voltage of the machine will be dictated by its own AVR and also by the voltage level of the system and the AVRs of nearby machines.

Generally, the rating of one machine is small in comparison with an interconnected system. It is, therefore, not possible for one machine to cause any appreciable rise in the terminal voltage as long as it is connected to the system. Increasing the field excitation, for example owing to a fault in the AVR, merely increases the reactive Mvar output, which may, ultimately, lead to tripping of the machine by the impedance relay or the V/Hz relay. In some cases, e.g. with peak-load generators and synchronous condensers, which are often called upon to work at their maximum capability, a maximum excitation limiter is often installed. This prevents the rotor field current and the reactive output power from exceeding the design limits.

If the generator circuit-breaker is tripped while the machine is running at full load and rated power factor, the subsequent increase in terminal voltage will normally be limited by a quick acting AVR. However, if the AVR is faulty, or, at this particular time, switched for manual control of a voltage level, severe overvoltages will occur. This voltage rise will be further increased if simultaneous overspeeding should occur, owing to a slow acting turbine governor. In case of a hydro electric generator, a voltage rise of 50 - 100 % is possible during the most unfavourable conditions.

Modern unit transformers with high magnetic qualities have a relatively sharp and well defined saturation level, with a knee-point voltage between 1.2 and 1.25 times the rated voltage U_n. A suitable setting of the overvoltage relay is, therefore, between 1.15 and 1,2 times U_n and with a definite delay of 1-3 s.

An instantaneous high set voltage relay can be included to trip the generator quickly in case of excessive over-voltages following a sudden loss of load and generator over-speeding.

For high impedance earthed generators, the over-voltage relay is connected to the voltage between phases to prevent faulty operation in case of earth-faults in the stator circuits .

13.1 Over-voltage relay RAEDK

The micro-processor based time over/undervoltage relay RXEDK 2H has two voltage stages with definite time delay.

Single-phase and three-phase protection assemblies type RAEDK are built up based upon the RXEDK 2H unit. For further details, see Byuer’s Guide.

14 Shaft current protection

An induced emf is developed in the shaft of the generators due to the magnetic dissimilarities in the armature field. The emf normally contains a large amount of harmonics. Both the wave shape and the magnitude depend on the type and size of the machine and thev also vary with the loading.

Normally, the induced emf is within the range 0.5 - 1 V for turbo-generators and 10 - 30 V for hydrogenerators.

If the bearing pedestals at each side of the generator are earthed the induced emf will be impressed across the thin oil-films of the bearings. A breakdown of the oil-film insulation in the two bearings can give rise to heavy bearing currents due to the very small resistance of the shaft and the external circuit.

Consequently, the bearing pedestal furthest from the prime mover is usually insulated from earth and the insulation supervised by a suitable relay. To prevent the rotor and the shaft from being electrostatically charged, the shaft of turbo-generators are usually grounded via a slip-ring on the prime mover side.

For hydro-generators, the water in the turbine provides the necessary connection to earth.

Severe damage on the bearings is not expected to occur if the shaft current is less than 1 A.

14.1 Shaft-current relay RARIC

The principle diagram of the shaft current relay RARIC is shown in Fig 19. The special shaft-current transformer, type ILDD, encompasses the shaft, which constitutes the primary winding. The secondary winding is connected to a current relay RXIK 1 with extremely low power consumption and the scale range of 0.5 - 2 mA. The timer RXKE 1 has tre scale range from 20 ms to 99 s. The minimum primary operate current increases with the diameter of the shaft, from 0.25 A for a diameter of 0.2 meters to 0.75 A for a diameter of 2.8 meters. An extra secondary winding is provided for convenient testing.

For further details, see *Buyer's Guide.*

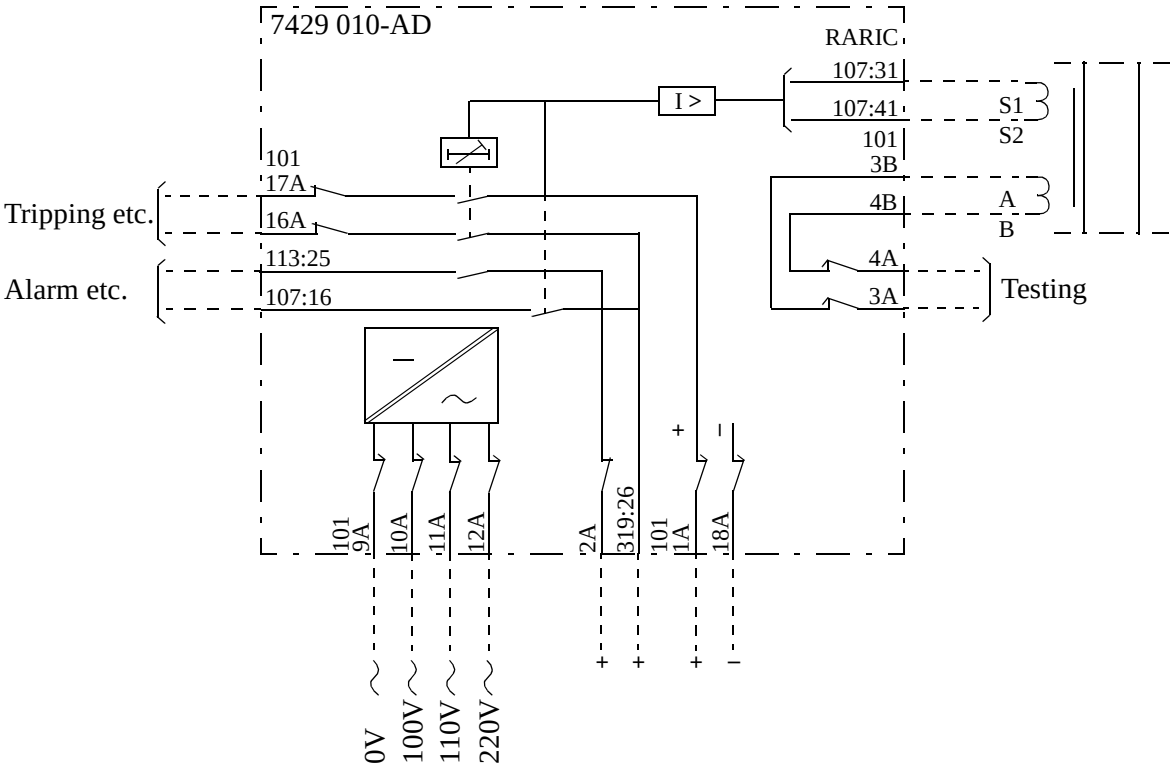

Fig. 19 Shaft-current relay RARIC

15 Under-frequency protection

The under-frequency relay is basically a protection for various apparatuses in a network which, in case of a disturbance, may be separated from the rest of the system and supplied from one generator.

Operation at low frequency must be limited, also, in order to avoid damage on generators and turbines. An example on turbine frequency limits is shown in Fig 20.

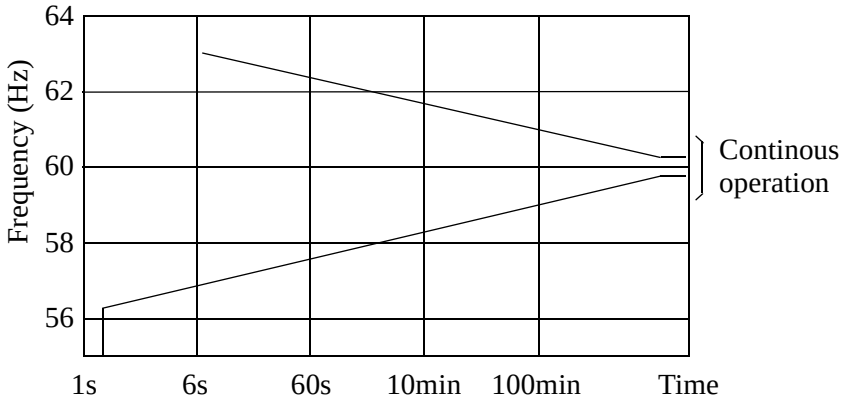

Fig. 20 Example on off-frequency limits for a steam turbine (f = 60 Hz)

In practice, prolonged generator operation at low frequency can only occur when a machine with its local load is separated from the rest of the network.

The necessity of under-frequency protection has to be evaluated from knowledge of the network and the characteristics of the turbine requlator.

15.1 Over-frequency protection

Steam turbines are also sensitive to overspeed. For large steam turbine generators, over-frequency protection with one or two frequency stages should be included. The protection will provide a back-up function for the speed monitoring device.

15.2 Time over/under frequency relay RAFK

The micro-processor based over/underfrequency relay RXFK 2H has two frequency measuring stages with wide frequency setting range and definite time delay settable up to 20 s. The two measuring stages are switchable for over- or underfrequency independently of each other. For one version of RXFK 2H one of the stages also comprises measurement of rate-of-change of frequency (df/dt).

Protection assemblies, type RAFK, with one or several RXFK 2H units to get the required number of frequency stages, are available.

For further details, see Buyer's Guide

16 Reverse power protection

The purpose of the reverse power relay is basically to prevent damage on the prime mover (turbine or motor).

If the driving torque becomes less than the total losses in the generator and the prime mover, the generator starts to work as a synchronous compen- sator, taking the necessary active power from the network. In case of steam turbines, a reduction of the steam flow reduces the cooling effect on the turbine blades and overheating may occur. Hydro turbines of the Kaplan and bulb type may also be damaged due to the fact that the turbine blades "surf" on the water and set up an axial pressure on the bearing. Diesel engines may be damaged due to insufficient lubrication.

The total losses, as a percentage of rated power of a prime mover/generator unit running at rated speed, are approximately:

Steam turbine	1 - 3 %
Diesel engine	25 %
Hydraulic turbine	3 %
Gas turbine	5 %

These values apply to the case when the power input to the prime mover is completely cut off. Thus, in the case when the total losses of a unit are covered partly by the prime mover and partly by electrical power from the system, the actual power drawn by a generator, during certain motoring conditions, may be much less than the above percentage values.

The generator currents remain balanced when the machine is working as a motor, hence, a single pole relay is fully sufficient if the sensitivity is high. For large turbo units, an additional relay may be connected to a different phase in order to obtain redundancy.

When the generator is working as a motor the small active current to the machine may be combined with a substantial reactive current delivered by the machine. Hence, the angular error of voltage and current transformers feeding low set reverse power relays should be small.

For the largest turbo-generators, where the reverse power may be substantially less than 1 %, reverse power protection is obtained by a minimum power relay, which normally is set to trip the machine when the active power output is less than 1 % of rated value.

16.1 Reverse power relay RXPE 40

The reverse power relay shown in Fig. 21 contains one static directional current unit RXPE 40 and one static timer RXKT 2 with scale range from 6 to 60 s. The directional unit measures the product I x cos φ , where φ is the angle between the polarizing voltage and the current to the relay. The lowest scale range used is 5 - 20 mA for generators with rated secondary current 1 A and 30 - 120 mA for generators with rated secondary current 5 A.

The power consumption of the current measuring circuit is 0.08 mVA at lowest setting, corresponding to 3.2 VA at rated current for the 1 A relay and 2.2 VA at rated current for the 5 A relay. Due to the small angular error in the measuring circuits, max +0.4° at lowest setting and rated voltage, and the low power consumption in the current measuring circuit, the relay can be set to operate down to 0.5 % of rated generator power.

The RXPE 40 unit is normally connected to phase current and phase voltage. For generators with V-connected voltage transformers, the current and voltage circuits are connected in accordance with Fig. 22.

When connected to phase current and phase voltage, the relay cannot operate when there is a direct earth-fault on the generator bus in the phase selected for measurement. To secure operation in this case, either two sets of relays connected to different phases, or polarising voltage connected according to Fig. 22 can be used.

The reverse power relay is also available with a separate timer to get a short operate time when the auxiliary contact indicates that the prime mover inlet valve is closed. For further details, see *Buyer's Guide*.

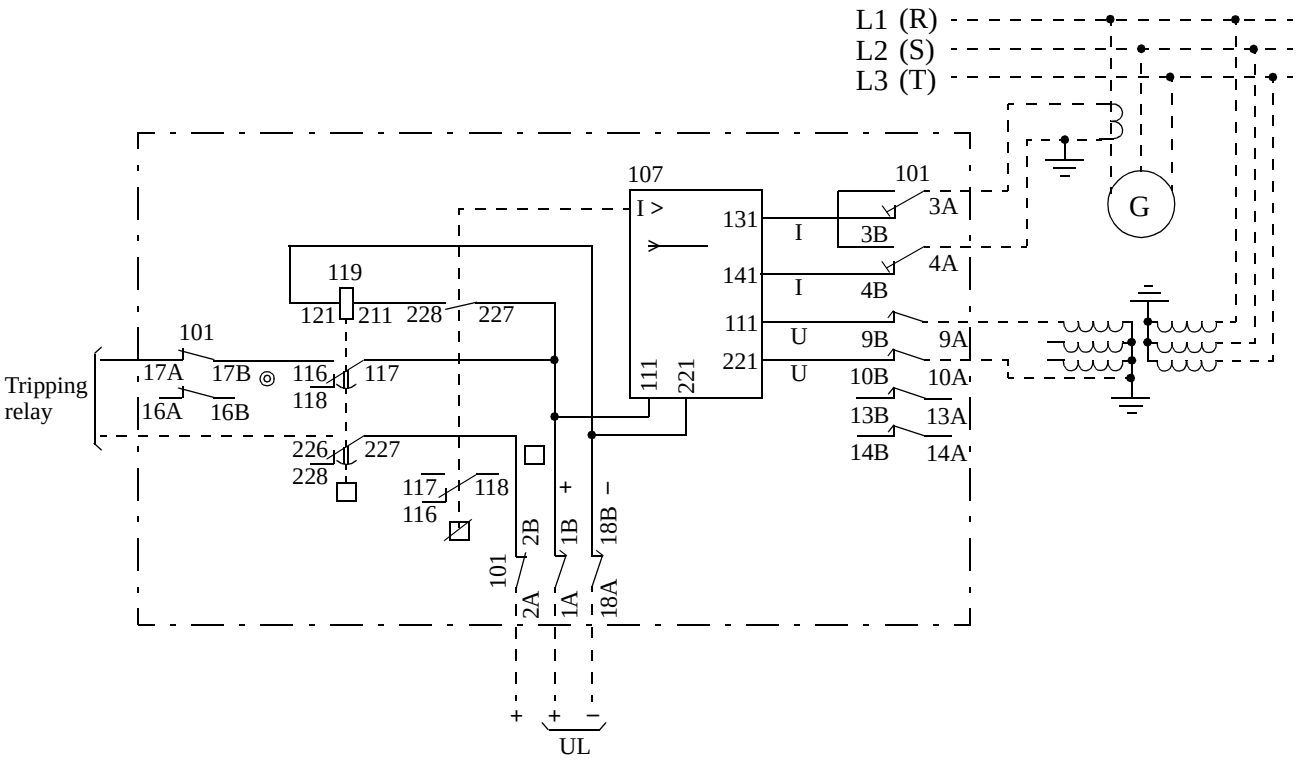

Fig. 21 Reverse power relay with one time step

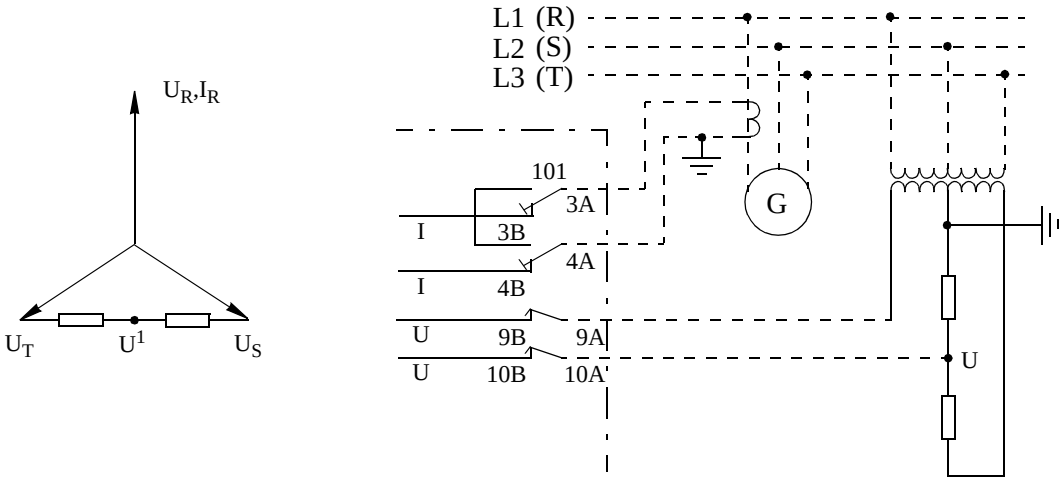

Fig. 22 Reverse power relay for generator with V-connected VT's

17 Protection against inadvertent energization (dead machine protection)

Despite the existence of interlockng schemes, a number of generators have been inadvertently energized while at standstill or on turning gear. In some cases, severe damage has been caused to the machine and even damage beyond repair has been reported.

Three-phase energization of a generator which is at standstill or on turning gear causes it to behave and accelerate similarly to an induction motor. The machine, at this point, essentially represents the subtransient reactance to the system and it can be expected to draw from one to four per unit current, depending on the equivalent system impedance. Machine terminal voltage can range from 20 % to 70 % of rated voltage, again, depending on the system equivalent impedance. Higher quantities of machine current and voltage (3 to 4 per unit current and 50 % to 70 % rated voltage) can be expected if the generator is connected to a strong system. Lower current and voltage values (1 to 2 per unit current and 20 % to 40 % rated voltage) are representative of weaker svstems.

Since a generator behaves similarly to an induction motor, high currents will develop in the rotor during the period it is accelerating. Although the rotor may be thermally damaged from excessive high currents, the time to damage will be on the order of a few seconds. Of more critical concern, however, is the bearing, which can be damaged in a fraction of a second due to low oil pressure. Therefore, it is essential that high speed clearing be provided.

The conventional generator protective relays do not secure fast tripping in case of inadvertent energization. For the offset mho type of loss-of-excitation relay, operation is marginal when setting and relay tolerances are considered, and the operate time would, in any case, be in the order of hundreds of milliseconds. The back-up impedance relay and the reverse power relay would operate with a typical time delay of 1-2 or 10-20 s respectively.

For big and important machines, fast protection against inadvertent energization should, therefore, be included in the protective scheme.

17.1 Dead machine protective relay RAGUA

The three-phase, static, high speed relay type RAGUA is shown in Fig. 23. The three overcurrent units RXIB 2 with operate time about 4 ms initiate instantaneous tripping, if the generator terminal voltage is below set operate value of the two undervoltage units RXEG 2. The timer, pos 143, prevents blocking of the instantaneous function by the transient voltage pulse, which will appear on the machine terminals when the breaker is inadvertently closed. The timer, pos. 343, is activated when the generator is in service and the set time delay prevents faulty operation of the relay on nearby faults. The RXSF 1 relay, pos. 331, operates if the voltage to one of the undervoltage units, RXEG 2, is lost.

For further details, see *Buyers Guide*.

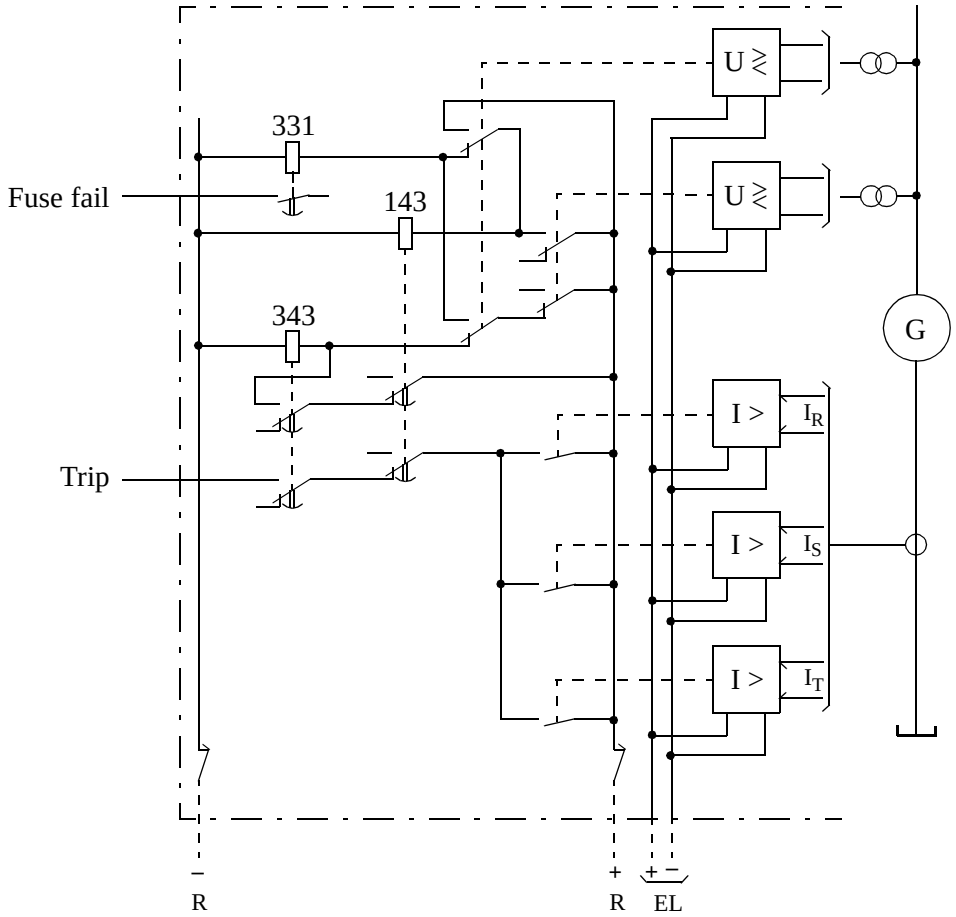

Fig. 23 Dead machine protective relay RAGUA. Simplified diagram

18 Special relays for pumped-storage generator/motors

For the high power reversible generator-motors, the so-called synchronous starting method is normally used when starting up the machine for pumping service. The machine is started up with the aid of a generator or a static convertor. In both cases, a reduced voltage is applied to the machine at low frequency and it typically takes 1-2 minutes to bring the machine up to rated speed. The saturation voltage of current transformers and, hence, the overcurrent figure (ALF), decreases with the frequency. Static relay with input transformers have a limited low frequency response. It is ABB's practice to include special stator ground-fault and short-circuit protective relays to cover electrical faults during the starting-up period.

18.1 Sensitive generator differential relay

The operate characteristic of the three-phase sensitive generator differential relay is shown in Fig. 24. The relay is connected in parallel with the RADHA or RADSG differential relay. With the extremely low setting, the relay is not stable in case of external faults and saturated current transformers and it is, therefore, blocked, when the machine comes up to 80 - 90 % of rated speed (and frequency). At this frequency, the RADHA and the RADSG generator differential relays are fully operative.

The voltage measuring elements comprise current relays type RXIK 1 with a special RC-filter on the input terminals.

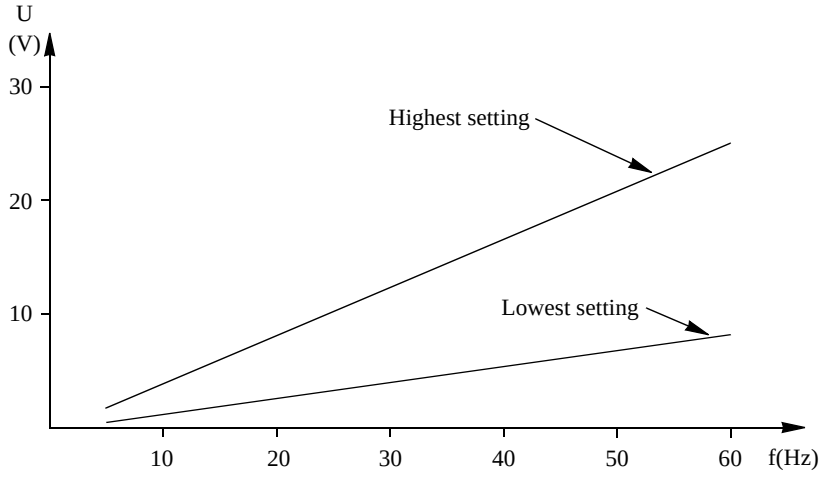

Fig. 24 Operate characteristic of the sensitive differential relay

18.2 Low-frequency overcurrent relay

The operate characteristic of a three-phase overcurrent relay with current elements type RXIK 1 is shown in Fig. 25. Different frequency/current characteristics are available.

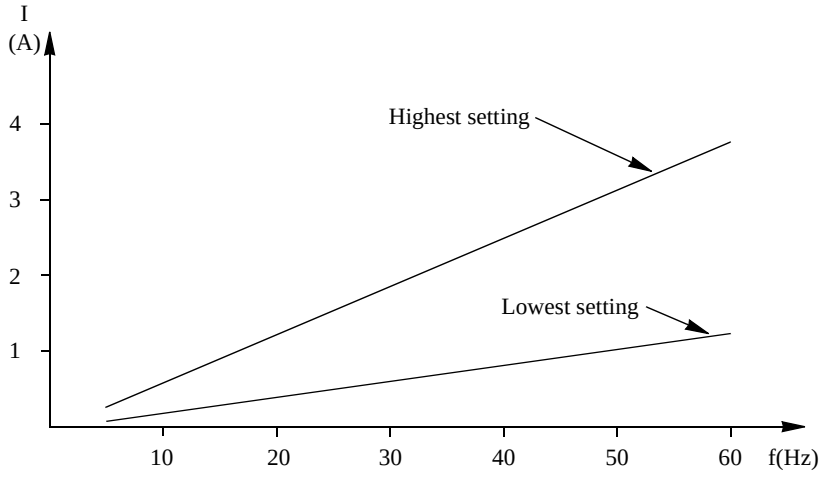

Fig. 25 Operate characteristic of low-frequency current relay

18.3 Sensitive stator earth-fault relay

A single-phase, overvoltage relay with operate characteristic acc. to Fig. 24 is used to provide stator earth-fault protection during start-up. The built-in timer type RXKL 1 has setting range from 20 ms to 99 h.

The relay is connected in parallel with the 95 % stator earth-fault relay.

19 Protective schemes for generators

The number and types of relays to be included in a generator protective scheme depends on the size and the importance of the machine and also the system layout. Hence, tables 1 and 2 below should only be regarded as general recommendations.

Table 2: Proposed protection equipment for different types of generators with different rating

Generator size **Protection**	**I** **0-4 MVA**	**II** **4-15 MVA**	**III** **15-50 MVA**	**IV** **50-200 MVA**	**V** **Large turbo-alternators**
Rotor overload					X
Rotor earth fault	X	X	X	X	X
Interturn fault		X[4]	X[4]	X[4]	
Differential generator		X	X	X	X
Differential block (transformer)		X	X	X	X
Underfrequency		X[3]	X[3]	X[3]	
Overvoltage	X	X	X	X	X
Stator earth fault	X	X	X	X	X
Loss of excitation		X	X	X	X
Pole-slip (out of step)				X	X
Reverse power	X[1]	X[5]	X[5]	X[5]	X
Under impedance		X[2]	X	X	X
Unbalance (I_2 current)		X[7]	X[7]	X	X
Overcurrent (definite time)	X[6]	X[6]			
Stator overload					X
Overcurrent / Undervoltage	X[6]	X[6]			
Dead machine			X	X	X
Shaft current			X[8]	X	

1 only necessary for steam and diesel drives
2 only necessary for thyristor excitation from generator terminals
3 only necessary for pump operation
4 only necessary when several bars of the same phase in the same slot
5 not necessary with Pelton turbines
6 overcurrent should not be used with self supported static excitation system
7 when unbalanced load is expected
8 common for hydro generators

Table 3: Example on relay functions divided into two function groups

Type of fault	ANSI	Protection function	System	
Generator stator			**A**	**B**
Short circuit	87G	Generator differential	X	
	21	Minimum impedance or alternatively		X
	51/27	Overcurrent/undervoltage for thyristor magnetisation		X
	51	Overcurrent		X
Dissymmetry	46	Negative sequence overcurrent		X
Stator overload	49	Thermal overload	X	
Stator earth fault	59	95% stator earth fault	X	X
Loss of excitation	40	Reactive current and phase angle		X
Motoring	32	Reverse power Redundant protection used for large generators	 X	X X
Overspeed	81	Max. frequency	X	
Turbine blade fatique	81	Min. frequency	X	
Interturn fault	59 or 51N		X	(X)
Overvoltage	59	Overvoltage		X
Over magnetization	24	V/Hz	X	
Low voltage	27	Undervoltage		X
Inadvertent breaker closing (Dead-machine protection)	50/27	Overcurrent with low voltage		X
Shaft current	-	Overcurrent, fixed time		X
Generator rotor				
Rotor overload	49	Thermal overload		X
Rotor earth fault	64R	Injected AC Injected DC	X 	 X
Step-up (Block) transformer				
Short circuit/earth fault	87T	Differential protection	X	
Overcurrent	50/51	Time overcurrent with instantaneous function		X
Breaker failure protection	50BFR			X
Earth fault differential prot.	87D		X	
Over magnetization prot.	24	V/Hz		X

Auxiliary transformer(s)

The auxiliary transformer is usually included in the overall block-differential protective zone. In addition it is provided with a three-phase two-step time-overcurrent relay e.g. type RAIDK, which serves as back-up short-circuit protection.

The transformer for exitation power supply is also provided with a three-phase two-step time-overcurrent relay e.g. type RAIDK for short circuit protection.