REG 100 Series
Generator protection

1MDB02004–EN
Page 1
March 1992
Changed since August 1990
Data subject to change without notice

ABB Network Control
& Protection

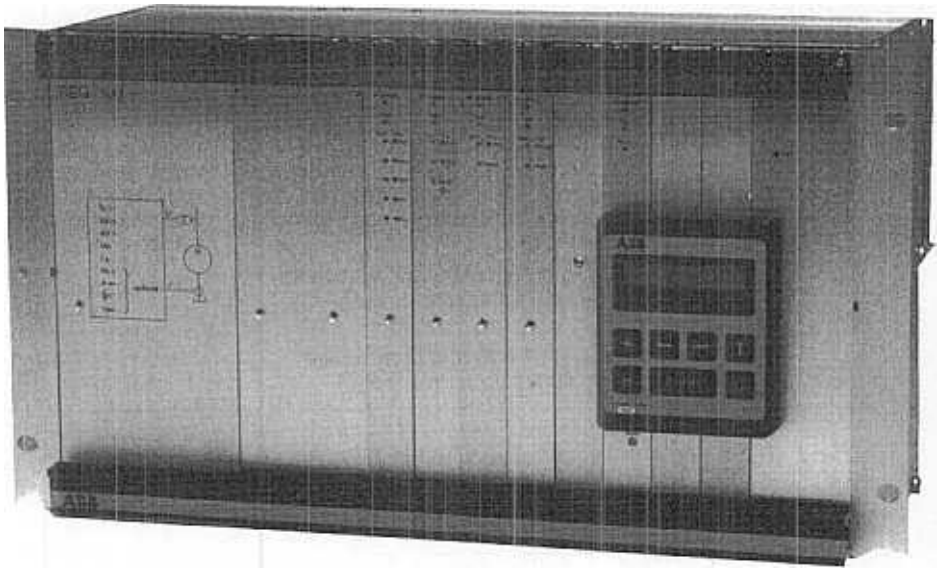

(SE 900017)

Features

The REG 100 series of generator protection packages enables the user to achieve a two subsystem protection system where selected functions can be provided in the subsystem preferred. Short–circuit and earth fault protection are included in both subsystems with the differential current function in one system and an under impedance or overcurrent function in the other.

- Protection functions included in REG 150
  - Differential current
  - Stator earth fault
  - I/O interface
  - Loss–of–excitation (optional)
  - Reverse power (optional)
  - Rotor earth fault (optional)
  - *Thermal overload (optional)*
  - *Overexcitation/overvoltage and over/ underfrequency (optional)*
- Protection functions in REG 110
  - Underimpedance
  - Stator earth fault
  - Inadvertent breaker closing (dead machine)
  - Overvoltage
  - *Undervoltage*
  - Negative sequence current (optional)
  - Loss–of–excitation (optional)
  - Reverse power (optional)
  - Rotor earth fault (optional)
  - *Thermal overload (optional)*
- Protection functions included in REG 100
  - Overcurrent
  - Stator earth fault
  - Overvoltage
  - Undervoltage
  - Negative sequence current (optional)
  - Loss–of–excitation (optional)
  - Reverse power (optional)
  - Rotor earth fault (optional)
  - *Thermal overload (optional)*
- Stand–alone modules provide high dependability
- Software matrix programming of all individual trip functions to four trip relays
- Alarm relay with potential–free contact for each individual protection function
- Versatile man–machine–communication (MMC) from the relay front panel with numerical display of setting, service and trip values
- Wide setting ranges with high accuracy
- Digital settings in per unit generator values
- Extensive self–supervision
- Continuous monitoring of external and internal auxiliary voltages
- Ease of commissioning and testing with built–in test switch and software
- Insensitive to electrical interference and mechanical shocks
- Compact design enables easy retrofit
- *Included in PYRAMID family for serial communication with SCS or SMS*

Application

REG 100 and REG 110 are used as back–up protection packages for synchronous generators (and motors). Due to generator protection dependability requirements, a separate primary protection package, including e.g. differential and stator earth fault protection, should always be included.

The stator earth fault protection comprises both neutral voltage and zero–sequence current measuring circuits. The latter is used for generators directly connected to a bus. For the phase short–circuit overcurrent function, normal inverse or independent time lag characteristics can be selected.

Application (cont'd)

In **REG 100** the undervoltage protection can be programmed to seal–in on overcurrent start. In this way, a reliable phase short–circuit protection is obtained even when the short–circuit current decreases to a low value within the set time delay of the protection.

In **REG 110** the short–circuit protection is a two zone underimpedance function. An inadvertent breaker closing function has been added to the undervoltage function, to give instantaneous trip when a machine is accidentally energized at standstill.

REG 150 is intended to be used as primary protection. The high impedance differential current function offers very sensitive and stable short–circuit protection.

U_N stator earth fault function enables two redundant 95% earth fault functions in the two subsystems.

REG 150 is provided with a I/O unit which allows external signals to be routed via REG 150 for tripping and indication, e.g. contacts from a Buchholz relay. The input can also be used as a simple contact based breaker failure relay for the generator breaker when there are both unit and generator breakers. When there is only a unit breaker, a current measuring breaker failure relay (e.g. type RAICA) should be used to increase the security.

The available options are included in REG 100 or 110 for one subsystem and REG 150 for the other, according to the demands at hand. Some options e.g. reverse power, field failure, rotor earth fault and the thermal overload options may be used in all REG versions, which makes it possible to duplicate those functions for larger generators.

Other options are dedicated to certain REG relays. This is the case for the negative sequence relay function available in REG 100 and 110 and the over/under frequency and overexcitation V/Hz functions for REG 150.

Design

The REG 100 series of generator protection is housed in a 19" equipment frame with a height of 6U (226 mm). All external connections are made with standard COMBIFLEX terminal sockets. The RTXP 24 switch is covered by a front plate. Below the test switch, a relay terminal base is mounted and space provided for a one seat relay. Two mother boards in the rear of the equipment frame provide the internal connections for the plug–in units.

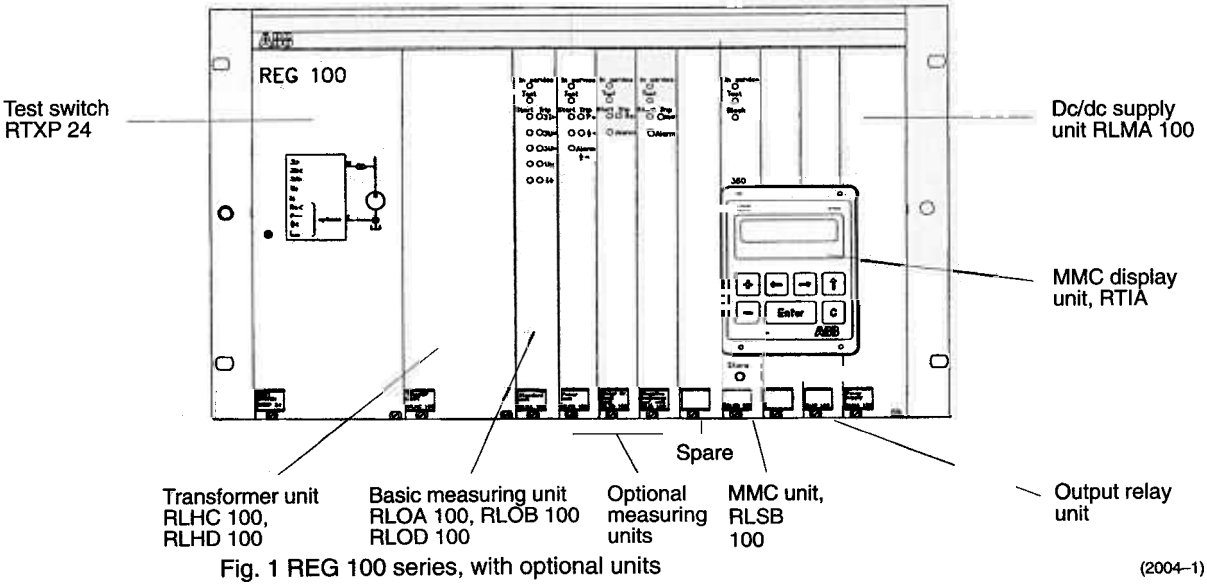

Fig. 1 REG 100 series, with optional units (2004–1)

The transformer unit **RLHC 100/RLHD 100** is used to adapt the external inputs for use in the measuring circuits and to isolate the measuring circuits galvanically from the external circuits.

The input signals from the transformer unit are passed through analogue filters and then transformed to dc voltages in RMS–converters. The dc voltages are multiplexed sequentially to the microprocessor, in which A/D conversion and comparison with set values is done. The setting parameters are stored in an internal EEPROM in the microprocessor, of each measuring unit.

The basic measuring unit **RLOA 100** provides the following protection functions in REG 100:

- phase overcurrent
- undervoltage
- overvoltage
- neutral voltage stator earth fault
- neutral current stator earth fault

The basic measuring unit **RLOB 100** provides the following protection functions in REG 110:

- under impedance
- inadvertent breaker closing (dead machine protection)
- overvoltage
- neutral voltage stator earth fault
- neutral current stator earth fault

The basic measuring unit **RLOD 100** in REG 150 provides the following protection functions:

- differential current
- neutral voltage stator earth fault
- I/O input external tripping through REG 150.

The measuring units contain all the necessary hard– and software to perform the protection functions in accordance with the set operating parameters, independently of the other measur-

ing units and the MMC unit. Self–supervision is performed continuously, comprising:

- the normal microprocessor watchdog function
- read–write–read cycling of memory cells and internal registers
- check of the A/D–converter
- checksum verification of the program memory and setting parameters stored in the EEPROM

Optional units
- **RLPB 100** with reverse power and loss–of–excitation protection function (REG 100/110/150)
- **RLZD 100** with rotor earth fault protection function (REG 100/110/150)
- **RLIB 100** with negative sequence current protection function (REG 100/110)
- ***RLVA 100** with thermal overload protection function (REG 100/110/150)*
- ***RLOF 100** with frequency/overexitation protection function (REG 150)*

In these units, the measurements involve instantaneous values of currents, voltages and angles between voltages and currents as required by the measuring function performed.

Light Emitting Diodes (LED's) on the front of the individual measuring units indicate:
- in service
- test mode
- start, trip

Detailed information, e.g. about faulted phases, fault current magnitude, etc., is transferred to the MMC unit and can be viewed on the **RTIA** display unit, (see below).

Space is available in the rack for a total of five measuring units. The units can be placed at will within the allocated space. If required it is possible to duplicate available units to increase dependability.

MMC–system
The man–machine–communication (MMC) system in REG 100 is as much as possible, separated from the measuring system. It contains the following major parts:

1. RLSB 100 – MMC–unit
2. RTIA – MMC–display unit
3. Star–structured serial–bus
4. Software to establish a reliable communication between RLSB 100 and the other units.

RLSB 100 is the master in the MMC–system. It identifies installed units and establishes a cyclic poll of all units. When a command is entered via RTIA, RLSB 100 uploads necessary information from the measuring units (settings, service values, trip values etc).

If a start and/or trip occurs within a measuring unit, the unit reports a change in status during the cyclic poll. RLSB 100 then automatically uploads the information related to this event and transfers it to the RTIA unit.

The MMC display unit RTIA is plugged into the front of the RLSB 100 unit. It is used to set the relay, select various options and present information to the operator, (see Fig. 1. below).

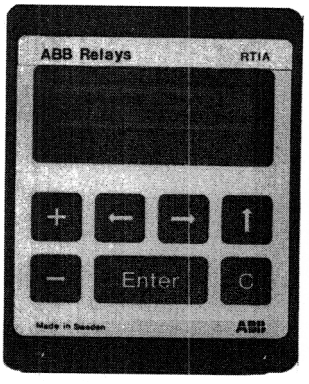

(90643)

Fig. 1 Display unit RTIA

The choice of operating modes and selection of individual parameters within the modes is done with push–buttons on the front of the RTIA unit. When entering a new setting, the linked push–button "STORE" must be operated. This ensures that settings cannot be unintentionally changed. The output relay unit contains four tripping relays and alarm relays with programming switches. The trip output from the individual protection functions to the appropriate tripping relay(s) is programmed on the RTIA display unit and stored in the EEPROM of the individual measuring units. The trip circuits are provided with impulse holding. One alarm relay is allocated to each individual protection function, and by means of the programming switches, the start or the trip function can be selected to operate the relay, see Fig. 3. The rotor earth fault and negative phase sequence protection function, have an extra alarm relay without programming switches. One relay is used for alarm in case of an internal relay fault.

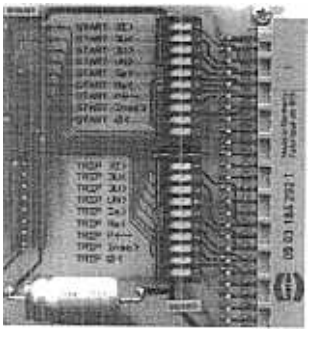

(880574)

Fig. 3 Programming switches for alarm relays

Measuring function notes
$3I_d$ Differential current function is based on the high impedance principle requiring identical turns ratio and separate cores on the input CT's. The sensitivity for primary faults is very high, *normally 2–4% of I_n*.

U<–I Indavertent closing function (dead machine) secures instantaneous tripping if the generator is fed with voltage, by human error or equipment failure, when at standstill.

U_N The neutral point voltage function is heavily filtered against the third harmonic voltage generator by the machine. This results in the capability to set the maximum available neutral point

Design (cont'd)

voltage for a fully developed earth fault at the generator terminal.

Z< Underimpedance function
The impedance function has two impedance and time zones. The impedance zone 2 is normally set to "see" through the step–up transformer and to have a time delay to provide selectivity. The low set impedance zone should not "see" through the step–up transformer and is normally not delayed. The relay can be set to measure phase–to–phase or phase–to–neutral voltages.

U> Overvoltage function
The overvoltage function is provided with one instantaneous and one delayed trip level. The relay can be set to measure phase–to–phase or phase–to–neutral voltages.

I_N, Neutral current function can be used as shaft current function (*0.5 mA version*) or as interturn fault protection for twin–generators.

P <– Reverse power functions
A timer, t_h, is provided to secure operation if the output of the reverse power measuring element resets due to a power swing. The unit will operate after set operating time if the reverse power element picks up again before the time set on timer t_h has elapsed. The function can be set to provide a minimum low forward power function.

Φ < Loss–of–excitation
The relay measures the reactive power infeed from the system upon loss of excitation or low excitation. The relay characteristic is a straight line in the negative area of the P/Q diagram. The angle of the line can be adjusted to fit the generator capability curve.

Timers t_{en1} and t_{en2} are included to prevent an unwanted trip in case of external short–circuits, should this occur when the machine is run underexcited in the region where Iα operates. In this case the time delay is set sufficiently long to ensure that the Iα function resets before the O/C or U/V release is given.

A timer, t_2, is included to ensure trip in case of loss–of–excitation when the machine is run at extremely low active load.

Re< Rotor earth fault function
The rotor earth fault relay is based on injection of an ac voltage between the field circuit and earth. The voltage injection unit for the rotor earth fault protection function is mounted separately, on an apparatus plate, placed in a GKB 855 box enclosure or inside one of the cubicles of the excitation system equipment.

I_{nsc} Negative phase–sequence current function
The negative sequence relay has two set levels. One fixed time for alarm and one inverse delayed for tripping. A special timer t_2 can be used to reduce the operating time for negative sequence currents near the set operating level.

I_{th} Thermal overload function
The thermal overload function is based on I^2t measurement and provided with a thermal memory. The heating and cooling time constants are settable.

The characteristic is obtained according to

$$\theta = \theta_s \times (1 - e^{-t/\tau})$$

where
θ = *temperature rise after the time t*
θ_s = *final temperature at t = ∞*
τ = *set thermal time constant*

U/f> Overexitation function
The overexcitation function is provided with an inverse characteristic according to ASA standard C57.12–00.411 to allow a maximum utilization of the transformer capacity. The function can be set to measure the overvoltage only or the magnetizing level i.e. U/f (V/Hz).

f ≷ Frequency function
The frequency function has four frequency set levels that can be selected for over- or underfrequency operation. The function can be used for system reconnection to an "islanding" operation and/or trip the generator for unacceptable frequencies.

Technical data

Rated phase current, I_n	1, 2 or 5 A
Basic phase current, I_b	(0.4–1.1) x I_n
Rated earth current, I_{Nn}	*0.5*, 2, 5, 25, 125 mA
Rated voltage between phases, U_n	110 V
Basic voltage between phases, U_b	(0.7–1.1) x U_n
Rated neutral point voltage, U_{Nn}	240 V
Basic neutral point voltage, U_{Nb}	(0.25–1.1) x UN_n
Rated frequency	50–60 Hz
Auxiliary voltage	48–60, 110–125 or 220–250 V dc ±20%
Prolongation of trip impulse t_{d1}–t_{d4}	*0–3 s*
Delimiter of trip impulse t_{p1}–t_{p4} (Re< and I_{th} functions)	*0.5–5 s*

Power consumption

Auxiliary supply	
normal service	maximum 18 W
operational	maximum 40 W
Phase current circuits, per phase at rated current	
I_n = 1 A	< 60 mVA
I_n = 2 A	< 120 mVA
I_n = 5 A	< 300 mVA
Reverse power and loss–of–excitation function (phase R)	
I_n = 1 A	< 60 mVA
I_n = 2 A	< 120 mVA
I_n = 5 A	< 300 mVA
Earth current circuit, at, I_{Nn}	
I_{Nn} ≥ 2 mA	< 0.3 mVA
I_{Nn} = 0.5 mA	*< 30 μVA*
Line voltage circuits, per phase at rated voltage (110 V)	< 50 mVA

Neutral point voltage circuit, at rated voltage (240 V)	< 200 mVA

Overload capacity

Phase current circuit continuous	*4 x I_n*
for 1 s	100 x I_n *max. 500 A*
Earth current circuit continuous	100 x I_{Nn}
for 1 s	2000 x I_{Nn}
Line voltage circuits continuous	2 x U_n
Neutral point voltage circuit, continuous	2 x U_{Nn}

Environmental condition

Permitted service ambient temperature	–5°C to +55°C
Permitted storage ambient temperature	*–40°C to +70°C*
Humidity test	acc. to IEC 68–2–30
Weight	10 kg
Dimensions (see 1MDB14005–EN)	6U 19" H = 266 W = 483 D = 226 mm

Insulation tests

Dielectric test: current circuits	2.5 kV, 50 Hz, 1 min
other circuits	2.0 kV, 50 Hz, 1 min
Impulse voltage test	5 kV, 1.2/50 µs, 0.5 J

Disturbance tests

Power frequency test	0.5 kV, 50 Hz, 2 min
Fast transient test	4–8 kV, 2 min
1 MHz burst test	2.5 kV, 2 s
Radiated electromagnetic field test	*acc. to IEC 255–22–3*

Contact data for trip and alarm relays

System voltage	250 V ac/dc
Test voltage over open contact	1.0 kV, 50 Hz, 1 min
Test voltage between contact and relay coil	2.0 kV, 50 Hz, 1 min
Current–carrying capacity continuous	5 A
Making and conducting capacity, L/R < 10 ms for 200 ms	30 A
for 1 s	10 A
Recommended min. contact loading	10 mA 5 V 50 mW
Breaking capacity ac, PF > 0.4	8 A
dc, L/R < 40 ms	
24 V	2.0 A
48 V	1.0 A
55 V	0.8 A
110 V	0.4 A
125 V	0.3 A
220 V	0.2 A
250 V	0.15 A

3I> Three–phase O/C function

Start function	*$I > = (1–2.5) \times I_b$*
Time delays :	
Definite time t_1	*$t_1 = 0.1–10$ s*
Definite time t_2	*$t_2 = t_1 + (0.1–10$ s)*
Normal inverse time	*$k = 0.05–1.2$*
Instantaneous function (can be blocked)	*$I>> = (1–12) \times I_b$*
Limiting error for current measurement	*< 5% of set value*
Operate time	< 60 ms at 2 x set operate value
Reset time	< 80 ms to zero from 10 x set operate value
Reset ratio	> 95%

3Z < Underimpedance protection function

Start function	Z < = (0.10–1.00) x Z_b Z<< = *(0.05–0.50)* x Z_b $Z_b = U_b/I_b$
Min. operate current	0.2 x I_b for Z< 0.5 x I_b for Z<<
Time delays:	
Definite time t_1	t_1 = 0.0–10.0 s for Z <
Definite time t_2	t_2 = 0.1–10.0 s for Z <<
Accuracy	*< 5% of set value ($I > 0.5 \times I_b$)* *< 10% of set value ($I < 0.5 \times I_b$)*
Operate time	
Z<	*< 90 ms*
Z<<	*< 80 ms*
	$Z_{fault}/Z_{set} = 0.5$
Resetting time	< 70 ms
Resetting ratio	< 112%

U < – I Inadvertent closing/undervoltage function

Inadvertent closing function:

Start function	*$I > = 0.2–2.5 \times I_b$*
Accuracy	*< 5 % of set value ($I > 0.5 \times I_b$)* *< 7 % of set value ($I < 0.5 \times I_b$)*
Operate time	< 90 ms
Resetting time	< 80 ms
Resetting ratio	> 90%
Release of I> tripping	20.0 s after U_{RS}&U_{ST}&U_{TR} < U_{set}
Block of I > tripping	150 ms after U_{RS} or U_{ST} or U_{TR} > U_{set}

Under voltage function:

Start function	*$U < = 0.2–1.0 \times U_b$*
Accuracy	< 3% of set value
Operate time	< 80 ms
Resetting time	< 80 ms
Time delay	t_1 = 0.10–10.0 s
Resetting ratio	< 110%

3U < Three–phase U/V function

Start function	U < = (0.2–1.0) x U_b
Time delay	t_1 = 0.1–10 s
Delay of external release	t_{en1} = 0.1–10 s
Holding of seal–in O/C relay	t_{en2} = 0.1–10 s
Limiting error for voltage measurement	< 5% of set value
Operate time	< 70 ms from 2 x set operate value to zero
Resetting time	< 70 ms from zero to 2 x set operate value
Resetting ratio	< 105%

The undervoltage function, can be programmed to measure phase voltages or phase–to–phase voltages.

3U > Three–phase O/V function

Start function	U > = (1.0–1.4) x U_b
Time delay	t_1 = 0.1–10 s
Instantaneous function (can be blocked)	U >> = (1.0–1.7) x U_b
Limiting error for voltage measurement	< 5% of set value
Operate time	< 70 ms at 2 x set operate value
Resetting time	< 70 ms from 2 x set operate value to zero
Resetting ratio	> 97%

The overvoltage function can be programmed to measure phase voltages or phase to phase voltages.

U_N Neutral point voltage function (stator earth fault)

Start function	U_N = (0.04–0.25) x U_{Nb}
Time delays Trip, step 1 Trip, step 2	 t_1 = 0.1–10 s t_2 = 0.1–10 s
Limiting error for voltage measurement	< 5% of set operating value
Operate time	< 100 ms at 2 x set operate value
Resetting time	< 100 ms from 2 x set operate value to zero
Resetting ratio	> 90%
Damping factor for 3rd harmonic voltage	> 20

I_N Neutral overcurrent function (Stator earth fault, *shaft current or interturn protection*)

Start function	I_N = (1–6) x I_{Nn}
Time delays: *Trip* *Prolongation of trip impulse*	 t_1 = 0.1–10 s *t_d = 0.0–10 s*
Limiting error for current measurement	< 5% of set operating value
Operate time	< 60 ms at 2 x set operate value
Resetting time	< 80 ms from 10 x set operate value to zero
Resetting ratio	> 90%

$3I_d$ Current differential function

Start function	I_d = 5–50 mA
High impedance resistor	R = 2000 Ω
Operating voltage	U_R = R x I_d
Accuracy	< 5% of set value for I_d < 5% for R
Operating time	≤ 30 ms at I > 2 x I_d
Resetting time	< 100 ms from 2 x set operate value to zero
Resetting ratio	> 70%

ϕ< Loss of excitation function

Start functions: directional current overcurrent release undervoltage release	 Iα = (0.1–1) x I_b I > = (1–1.5) x I_b U < = (0.7–1) x U_b
Characteristic angle	α = 45° to 90°
Time delay, trip	t_1 = 0.2–10 s
for O/C release	t_{en2} = 0.2–10 s
for U/V release	t_{en1} = 0.2–10 s
for Iα current trip, without release (can be blocked)	t_2 = 0.5–20 min
Time delay, alarm	t_a = 0–40 s
Limiting error for current and voltage measurement	< 5% of set value
Operate time	< 100 ms at 2 x set operate value
Resetting time	< 80 ms
Resetting ratio Iα I > U <	 > 84% > 97% < 103%
Voltage block level	U < 0.3 x U_b

P <– Reverse power function

Start function: Active component of current in reverse or forward direction	 I_p = (–0.10 to +0.3) x I_b
Characteristic angle	0°
Adjustment for correction of system angular error	β = ±5°
Time delays: Trip, externally released	 t_1 = 0.1–10 s

Trip without external release	t_2 = 0–40 s
Sealing–in, for function at power swings	t_h = 0–40 s
Limiting error for current measurement	< 5% of set value
Operate time I_p	< 100 ms at 2 x set operate value
Resetting time	< 100 ms
Resetting ratio	> 82 %
Voltage block level	*$U < 0.7 \times U_n$*

I_{nsc} > Negative phase–sequence current function

Start function, trip	I_2 >> = (0.08–0.4) x I_b
Start function, alarm	I_2 > = (0.06–0.3) x I_b
Time delays: trip, inverse time characteristic	$t = \frac{K}{(\frac{I}{I_2})^2}$
time setting	K = 5–40 s
trip, constant time	t_1 = 0.5–20 min
alarm	t_a = 1–99.5 s
Cooling down time a = 2–80 in steps of 1	t_c = a x K
Limiting error for inverse time measurement	< 10% of set time
Limiting error for start current	< 5% of set value
Resetting ratio	> 93%

R_e < Rotor earth fault function

Start function	
trip	R_e << = (0.5–10) kohm
alarm	R_e < = (0.5–10) kohm
Operating time	approx. 2 s
Time delay	
trip	
fault on dc side	t_1 = 0–40 s
fault on ac side	t_2 = 0–40 s
alarm	t_a = 0–40 s
Limiting error for operate resistance	<10% of set value
Maximum excitation voltage	
Continuously	450 V dc
For 10 s	675 V dc
Maximum permitted phase–to–phase voltage on the ac side of the field circuit	
continuously	*300 V ac*
for 10 s	*450 V ac*
Maximum capacitance field circuit to earth	3 µF
Auxiliary injection voltage	110–120 or 220–240 V, 50–60 Hz
Permitted variation in injection aux. voltage	
RMS value	±20%
Frequency	±3 Hz

θ > Thermal overload proteciton function

Start function	*I_{th} = 1.02 x I_b*
Accuracy	*< 2% of set value*
Thermal time constant	*τ_+ = 1–100 min*
Cooling–down time constant	*τ_- = 1–10 x τ_+*
Restart inhibit level	*50–95%*
Thermal prewarning level	*50–100%*

U/f > Overexcitation protection function

Start function	*U/f > = (1.0–1.5) x U_b/f_n* *U > = (1.0–1.5) x U_b*
Accuracy	*< 5% of set value*
Frequency	*f = 50, 60 Hz*
Time delays: trip, inverse time	$t = 0.8 + \frac{0.18\,K}{(M-1)^2}$ *where* $M = \frac{U/f}{(U/f)\ start}$ *K = 1–63*
trip, constant time	*t_1 = 0–600 s*
trip, constant time (external release)	*t_2 = 0–10 s*
Operate time	*< 60 ms at 2 x set operate value*
Resetting time	*< 80 ms at 2 x set operate value to zero*
Resetting ratio	*> 97%*

f≷ Over- and underfrequency protection functions

Number of stages	*4*
Frequency	*f_n = 50, 60 Hz*
Start function	*$f_1 - f_4$ = 45–65 Hz*
Accuracy	*< 30 mHz*
Time delay	*t_1–t_4 = 0–10 s*
Operate time	*< 100 ms*
Resetting time	*< 100 ms*
Resetting ratio	
overfrequency function	*> 99.8%*
underfrequency function	*< 100.2%*
Voltage block level	*$U < 0.5 \times U_n$*

Dimensions

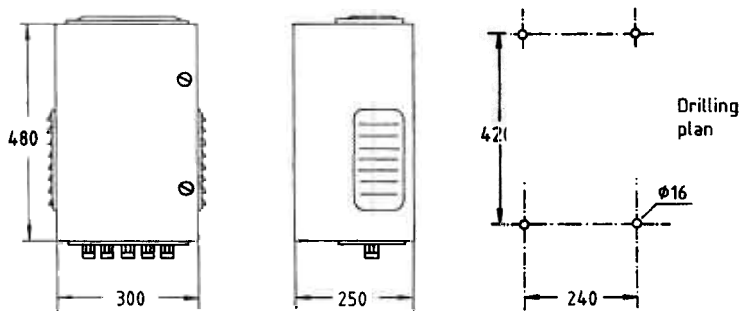

Fig. 4 Dimensions and mounting of GKB 855 box enclosure with voltage injection unit

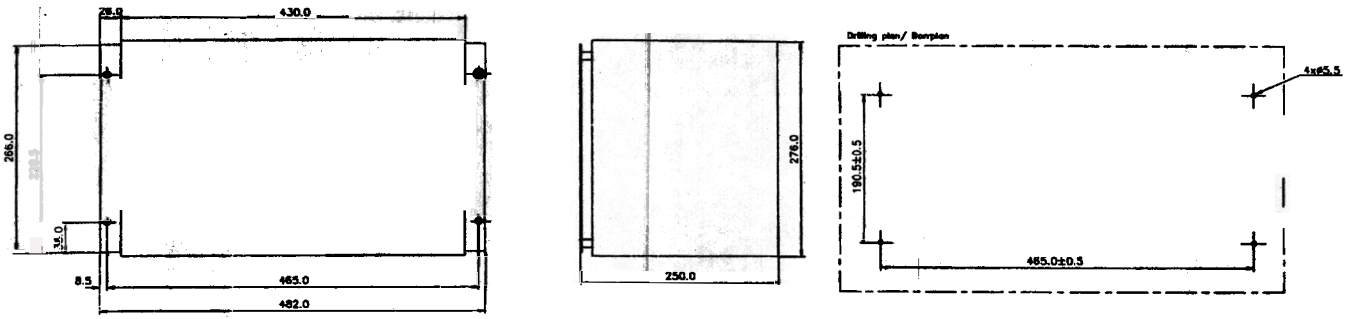

Fig. 5 Dimensions and mounting of a apparatus plate with voltage injection unit for cubicle installation

(2004–4)

Ordering

Specify:

- Type REG 100, REG 110 or REG 150
- Quantity
- Ordering No:
  REG 100 *RK 682 015–BA*
  REG 110 *RK 682 016–BA*
  REG 150 *RK 682 017–BA*
- Rated phase current I_n *(1/2/5 A)*
- Rated earth current I_{Nn} *(0.5/2/5/25/125 mA)*
- Auxiliary voltages:
  (48–60–110–125/220–250 V)
  EL (dc/dc converter supply)
  RL (interface relays)

  Note: A set of MXA voltage dependent resistors are required across $3I_d$> inputs when CT's have knee–point voltage ≥ 150 V.
  Ordering No. RK 795 101–BA
  These resistors are mounted on an apparatus plate 4U for back–plane cubicle mounting.
  See 1MDB14005–EN for dimensions.

- ***Additional units in REG 100, REG 110 and REG 150***
  - *Reverse power and loss–of–excitation unit, RLPB 100*
    Ordering No. RK 682 006–AA
  - *Rotor earth fault unit, RLZD 100*
    Ordering No. RK 682 008–AA
  - *Voltage injection unit RTTK for RLZD 100*
  - In box GKB 855 without heating
    EL=110–120 V ac
    Ordering No: RK 682 009–AA
    EL=220–240 V ac
    Ordering No: RK 682 009–BA
  - In box GKB 855 with heating
    EL=110–120 V ac
    Ordering No: RK 682 009–CA
    EL=220–240 V ac
    Ordering No: RK 682 009–DA
  - On apparatus plate, semiprotected, for installation in cubicle
    EL=110–120 V ac
    Ordering No: RK 682 009–EA
    EL=220–240 V ac
    Ordering No: RK 682 009–FA
  - *Thermal overload unit, RLVA 100*
    Ordering No. RK 682 021–AA
  - *Signal relay unit, RLKI 100*
    Ordering No.
    REG 100 *RK 682 004–AB*
    REG 110 *RK 682 004–BB*
    REG 150 *RK 682 004–CB*
- ***Additional units in REG 100 and REG 110***
  - *Negative sequence current unit, RLIB 100*
    Ordering No. RK 682 007–AA
  - *Shaft current transformer type ILDD*
    Ordering No. 4763 003
    Diameter of the transformer
- ***Additional units in REG 150***
  - *Overexcitation and frequency unit, RLOF 100*
    Ordering No. RK 682 022–AA

Reference

User's Guide, REG 100/110/150	1MDU02004–EN
Application Guide REG 100/110/150	1MDA02004–EN