1ZSC000562-AAY en, Rev. 1

On-load tap-changers, type UCG and VUCG
Installation and commissioning guide

Power and productivity
for a better world™

Original instruction

The information provided in this document is intended to be general and does not cover all possible applications. Any specific application not covered should be referred directly to ABB or its authorized representative.

ABB makes no warranty or representation and assumes no liability for the accuracy of the information in this document or for the use of such information. All information in this document is subject to change without notice.

This document must not be copied without our written permission, and the contents thereof must not be imparted to a third party nor be used for any unauthorized purpose. Contravention will be prosecuted.

Recommended practices

ABB recommends careful consideration of the following factors when installing on-load tap-changers:

Before you install or commission a unit, make sure that the personnel doing the job have read and fully understood the installation and commissioning guide provided with the unit.

To avoid damaging the unit, never exceed the operating limits stated in delivery documents and on rating plates.

Do not alter or modify a unit without first consulting ABB.

Follow local and international wiring regulations at all times.

Use only factory authorized replacement parts and procedures.

Safety warnings

The following warnings and notes are used in the manual:

WARNING

WARNING indicates an imminently hazardous situation, which if not avoided will result in death or serious injury. This signal word is to be limited to the most extreme situations.

WARNING also indicates a potentially hazardous situation, which if not avoided could result in death or serious injury.

CAUTION

CAUTION indicates a potentially hazardous situation, which if not avoided may result in minor or moderate injury. It may also be used to alert of unsafe practices.

CAUTION may also indicate property-damage-only hazards.

INFO provides additional information to assist in carrying out the work described and to provide trouble-free operation.

Safety precautions

WARNING

Unused transformer oil is harmful. Fumes from unused warm oil may irritate the respiratory organs and the eyes. After long and repeated contact with transformer oil, skin becomes very dry.

Used tap-changer oil from diverter switch housings and selector switch housings contains harmful substances. Fumes are irritating to the respiratory organs and the eyes and are highly flammable. Used transformer oil may well be carcinogenic.
Avoid contact with the oil and use oil-tight protective gloves when handling the oil.

First aid:
Skin contact: Wash your hands. Use skin cream to counteract drying.
In the eyes: Rinse your eyes in clean water.
Swallowing: Drink water or milk. Avoid vomiting. Call a doctor.

Collect used oil in oil drums.

Waste and clean-up: Should be absorbed by an absorber. Treat it as hazardous to the environment.

In the event of fire: Any fires should be extinguished with powder, foam or carbonic acid extinguishing agents.

WARNING

Be aware of the risk for slipping caused by oil spillage, for instance when working on the transformer cover.

WARNING

The motor-drive mechanism must not be installed in an explosive atmosphere. The electrical equipment creates sparks that can cause an explosion.

WARNING

Before any work is carried out on the tap-changer: Make sure that the transformer is disconnected and that grounding is properly conducted. Obtain a signed certificate from the engineer in charge.

WARNING

Before carrying out work on the tap-changer, put the LOCAL/REMOTE switch on the motor-drive mechanism to position 0. It is also advisable to shut the door of the motor-drive mechanism and pad lock it when work is carried out on the tap-changer. The key should be kept by the operator. This is done to avoid an unexpected start of the motor-drive mechanism.

WARNING

Before starting any work inside the motor-drive mechanism, the auxiliary power must be switched off.

NOTE: The motor, contactors and heating element may be energized from separate sources.

During drying of the transformer

CAUTION

The diverter switch should not be installed during drying, since the process removes grease needed for operation.

CAUTION

While drying with hot air and vacuum, the maximum permitted pressure difference for the diverter switch housing is 100 kPa at the maximum permitted temperature of 135 °C (275 °F).

CAUTION

During drying with the vapor phase process, the cover of the diverter switch housing and the bottom valve should be left open. The valve is opened with the special bottom valve key – a long hexagonal rod. The maximum permitted temperature is 135 °C (275 °F).

CAUTION

Use the special bottom valve key only (delivered with the tap-changer) to operate the bottom valve through the oil draining tube. The use of a stiffer tool may damage the valve.

CAUTION

To avoid seizing, do not operate the tap-changer during the drying process or afterwards until it is filled with oil.

Mounting of gaskets

CAUTION

Sealing surfaces and gaskets must be clean and undamaged. Diametrically opposed bolts in sealing joints must be tightened alternately several times, beginning with a low tightening torque and finally with the recommended tightening torque as described in Section 1.8 Tightening torques in this guide.

During oil filling

WARNING

When oil that has been used in a diverter switch housing is pumped out, grounded conducting tubes and hoses should be used to avoid the risk of explosion due to the gases produced by arcs during service.

CAUTION

Do not fill the diverter switch housing with oil if the transformer tank is under vacuum and the diverter switch housing is not.

CAUTION

Do not fill the transformer tank with oil if the diverter switch housing is under vacuum and the transformer tank is not.

After oil filling

CAUTION

Do not energize the transformer earlier than three hours after oil filling at atmospheric pressure. This waiting period is needed to allow air bubbles to dissipate.

During service

WARNING

Small amounts of explosive gases may be emitted from the breathing devices (dehydrating breather or one-way breather). Make sure that no open fires, hot surfaces or sparks occur in the immediate vicinity of the breathing devices.

WARNING

If a power supply failure occurs during operation, the operation will be completed when the power returns.

WARNING

The hand crank must not be inserted during electrical operation.

WARNING

If the tap-changer is not at its exact position and the hand crank is pulled out, the motor-drive mechanism will start and go to the exact position if the power supply is on.

CAUTION

After a pressure relay trip, follow the instructions in the chapter “Trip or alarm from supervisory devices” in the user's manual.

CAUTION

The pressure relay is a calibrated monitoring instrument. It must be handled with care and protected against careless handling or any kind of mechanical damage. Do not open the pressure relay package until just prior to installation on the tap-changer.

Content

1. Introduction 8
1.1 Type designation 10
1.2 Required tools 11
1.3 Required material 11
1.4 Oil 11
1.5 Oil conservator 11
1.6 Oil filter unit for continuous oil filtration 12
1.7 Weights 12
1.8 Tightening torques 12

2. Receiving 14
2.1 Unpacking 14
2.2 Inspection on receipt 14
2.3 Temporary storage before assembly 14

3. Installation in the transformer 15
3.1 Cover-mounting 16
3.1.1 UCG/VUCG with tap selector size C 16
3.1.2 UCG/VUCG with tap selector size III or F 19
3.2 Yoke-mounting 22
3.2.1 Mounting when the transformer ratio measurement is carried out before drying 23
3.2.2 Mounting when the transformer ratio measurement is carried out after drying 25
3.2.3 Mounting on transformer cover (after the drying process) 26
3.3 Connection to terminals 28
3.4 Transformer ratio measurement 30
3.4.1 Transformer ratio measurement before drying 30
3.4.2 Transformer ratio measurement after drying 30

4. Drying 31
4.1 Precautions before processing 31
4.2 Precautions after processing 31
4.3 Installation of diverter switch 31

5. Final assembly 33
5.1 Mounting of motor-drive mechanism 33
5.2 Mounting of external drive shafts 37
5.2.1 Mounting of vertical drive shaft 37
5.2.2 Mounting of horizontal drive shaft for one unit 39
5.2.3 Mounting of horizontal drive shaft for two units 41
5.2.4 Mounting of horizontal drive shafts for three units 43
5.2.5 Before operation 43
5.3 Supervisory equipment 43
5.4 Assembly of accessories 43
5.5 Connection to the oil conservator 43
5.6. Connection of tube for oil sampling for VUC 44

6. Oil filling 45
6.1 Filling methods and restrictions 45
6.2 Before filling 45
6.3 Filling at atmospheric pressure 45
6.4 Filling under vacuum 45
6.4.1 Oil conservator filled under vacuum 45

7. Electrical connection and testing 47
7.1 General 47
7.2 Connecting and testing the motor-drive mechanism and the tap-changer 47
7.3 Electrical tests on the transformer 47
7.4 After energizing 47

8. Transport 48
8.1 Dismantling before transport 48
8.1.1 Dismantling preparations 48
8.1.2 Removal of the vertical drive shaft 48
8.1.3 Removal of horizontal drive shaft for one unit 48
8.1.4 Removal of horizontal drive shafts for two units 48
8.1.5 Removal of horizontal drive shafts for three units 48
8.1.6 Accessories 49
8.2 Oil level during transport 49
8.2.1 Transformer filled with oil 49
8.2.1.1 Conservator mounted 49
8.2.1.2 Conservator unmounted 49
8.2.2 Transformer drained 49
8.2.2.1 Conservator mounted 49
8.2.2.2 Conservator unmounted 49

9. Commissioning 50
9.1 Connection to the oil conservator 50
9.2 Mounting the motor-drive mechanism and the drive shafts 50
9.2.1 Mounting of the motor-drive mechanism 50
9.2.2 Mounting of the external drive shafts 50
9.2.3 Mounting of the vertical drive shaft 51
9.2.4 Mounting of horizontal drive shaft for one unit 52
9.2.5 Mounting of horizontal drive shafts for two units 53
9.2.6 Mounting of horizontal drive shafts for three units 54
9.2.7 Before operation 54
9.3 Supervisory equipment 54
9.4 Accessories 54
9.5 Oil filling 54
9.6 Electrical connection and testing 54
9.6.1 Motor protection 54
9.6.2 Disk brake 55
9.6.3 Counter 55
9.6.4 Position transmitter and other position switches 55
9.6.5 Light 55
9.6.6 Heater 55
9.7 Putting into operation 55

1. Introduction

The arrangement of on-load tap-changers types UCG and VUCG, and of the tap-changer system, are shown in Figs. 1 and 2. The tap-changer may consist of one, two or three units driven by the same motor-drive mechanism. The tap-changer is delivered in three main parts: diverter switch housing, tap selector and motor-drive mechanism.

The tap-changer is available in designs for cover-mounting or for yoke-mounting. Cover-mounting means that the diverter switch housing is lowered through the hole in the transformer tank and then bolted straight onto the transformer cover, followed by mounting of the tap selector. Yoke-mounting means that the tap-changer is temporarily put on a fork located on the active part of the transformer. Yoke-mounting allows the transformer manufacturer to connect the windings to the tap-changer before drying and without having the transformer cover-mounted. The transformer cover is then lowered onto the tank, and the tap-changer is lifted and bolted to the cover. Use the appropriate instruction for cover-mounting or yoke-mounting in Chapter 3.

At cover-mounting the diverter switch housing is installed on the transformer cover before joining with the tap selector. The exception is the UCG/C and VUCG/C where the tap selector and the diverter switch housing is joined before the entire tap-changer is lowered through the hole in the transformer cover.

After the transformer drying process, the motor-drive mechanism and bevel gear are fitted to the transformer tank and the drive shafts are fitted to complete the assembly of the motor-drive mechanism, bevel gear and tap-changer before oil filling and testing.

Position numbers in this guide, for example SA11 (see Chapter 5), correspond to those on the packing list for the tap-changer.

All instructions are for one tap-changer unit. When there is more than one unit on the transformer, carry out the same procedures for each unit.

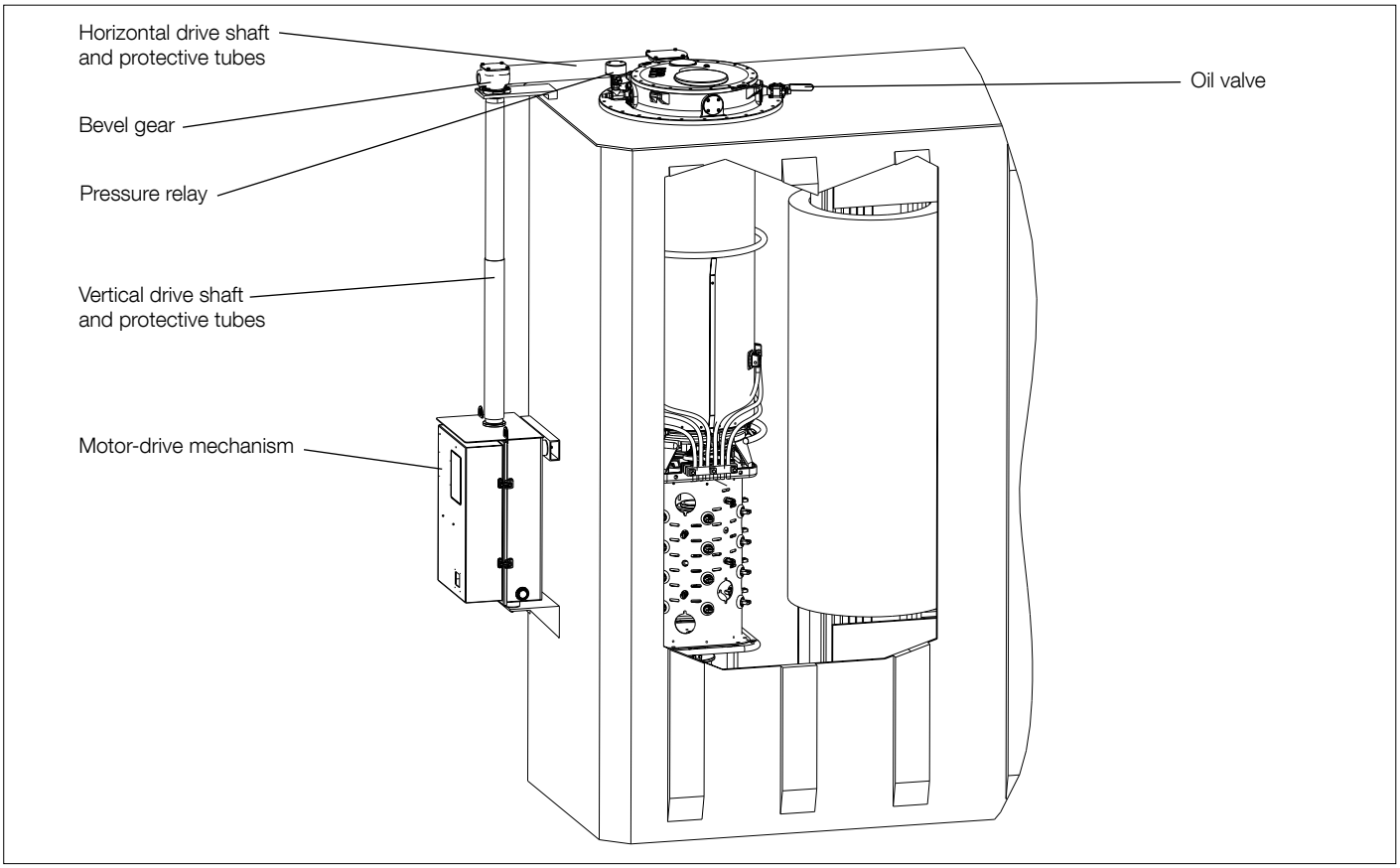

Fig. 1. On-load tap-changer system (single-unit shown).

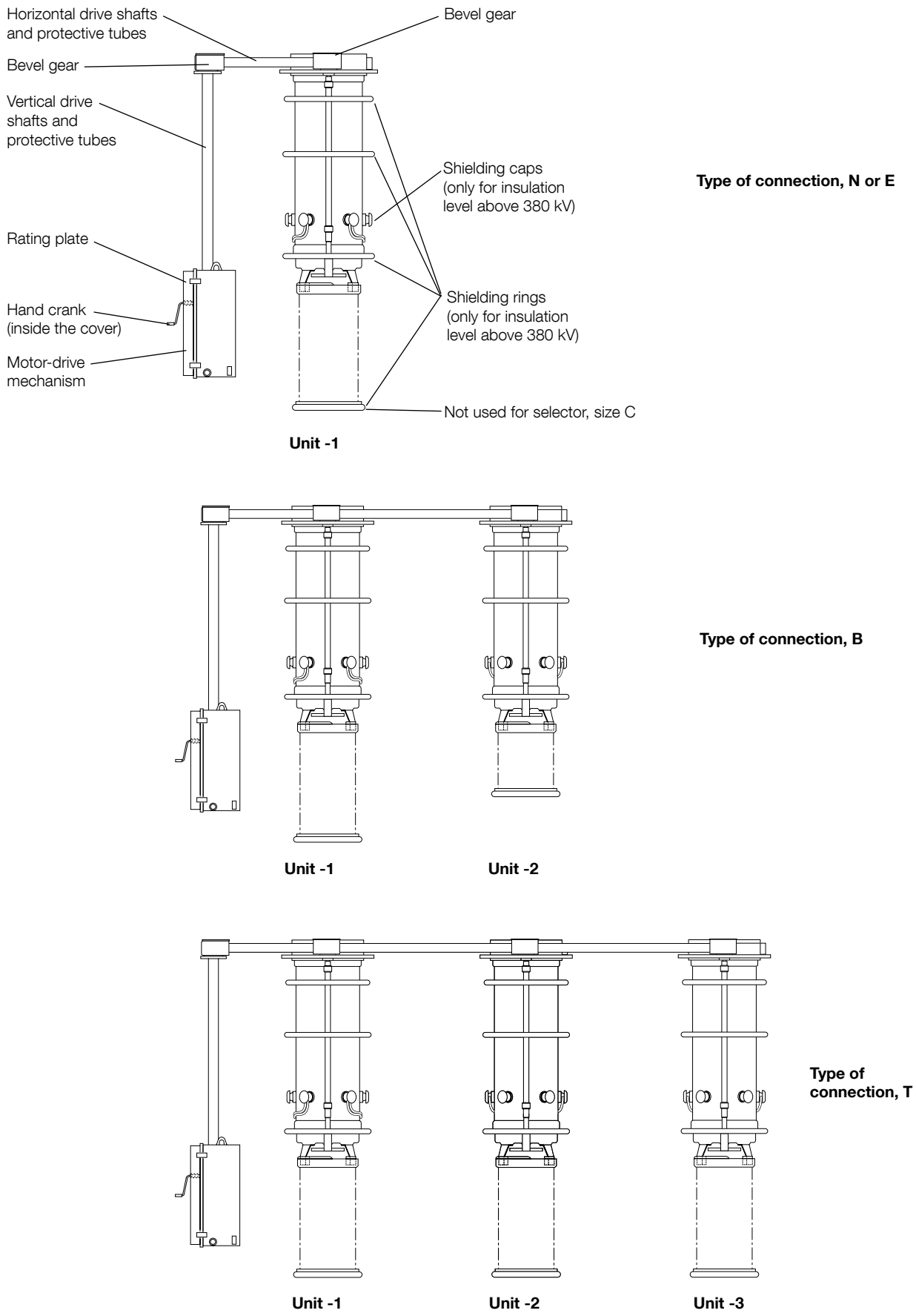

Fig. 2. Example of on-load tap-changer systems.

1.1 Type designation

U C G . . XXXX/YYYY/C,III,F
V U C G . . XXXX/YYYY/C,III,F

UCG Diverter switch with arc quenching in oil
VUCG Diverter switch with vacuum interrupters
Example: UCGRE 650/900/III

Type of switching
L Linear
R Plus/Minus
D Coarse/Fine

Tap selector size

Maximum rated through-current

Impulse withstand voltage to ground

Type of connection
N Three-phase star point (one unit)
E Single-phase (one unit)
T Three-phase fully insulated (three units)
B Three-phase delta (two units; single-phase and two-phase

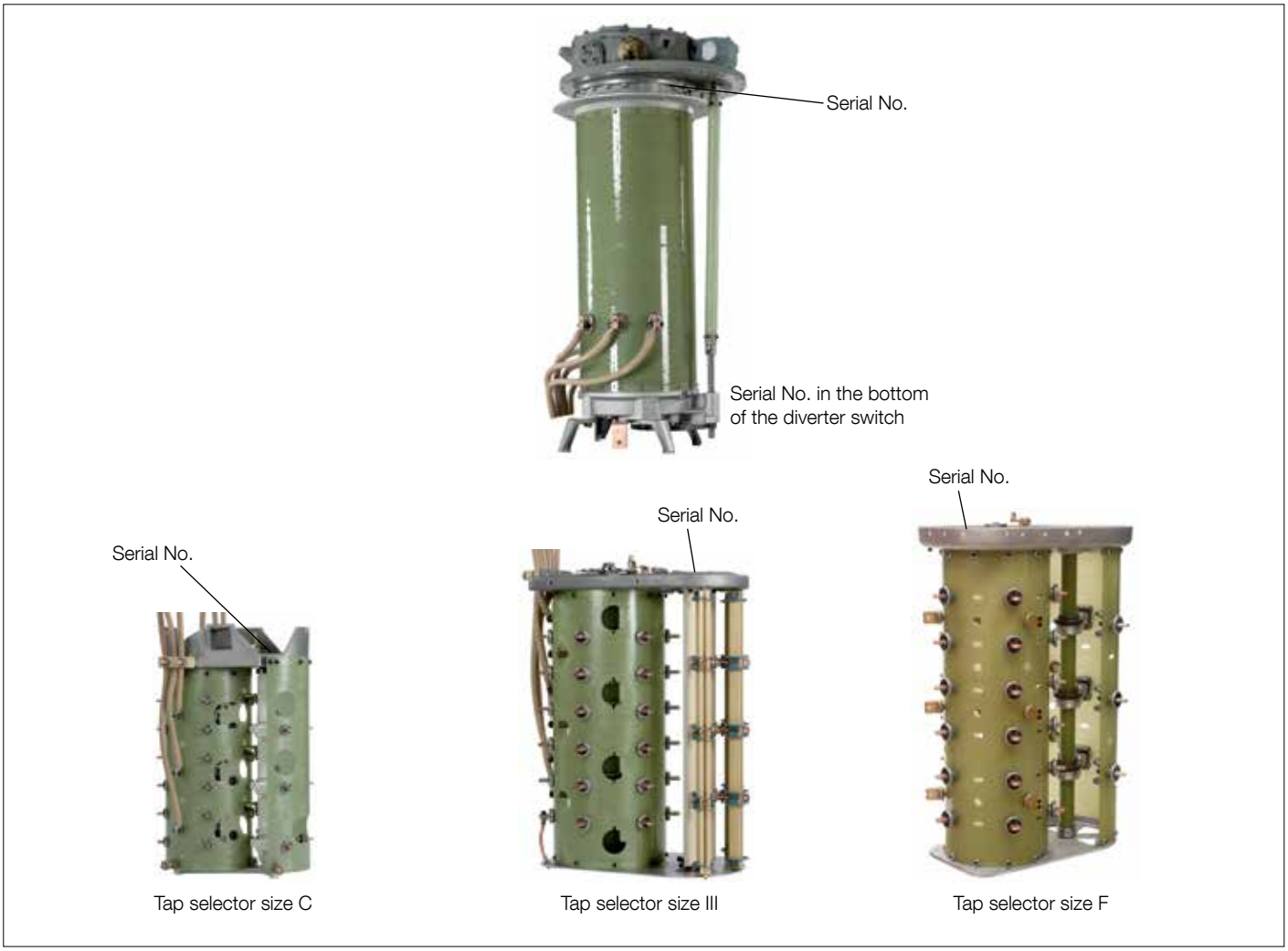

Fig. 3. Diverter switch housing UCG/VUCG, and tap selectors size C, III and F.

1.2 Required tools

- Standard set of open-end wrenches (up to 24 mm)
- Standard set of sockets (up to 24 mm)
- Standard set of screwdrivers
- Socket handle
- Set of pliers, including cutting pliers
- Dynamometric wrench, 5-85 Nm
- Sliding caliper
- Allen key sockets, 2–10 mm
- Pipe wrench
- Bottom valve key (delivered with the tap-changer)
- Lifting device, article no. LL 135 016-A
- Special hand crank for operating the tap-changer on the bevel gear, article no. LL 117 016-M
- Hack saw (only for installation)
- File
- Folding ruler/tape measure
- Air pump with hose, pressure gauge (0–250 kPa) and connection with internal thread R 1/8”
- Container, 50 liters
- Small oil pump with connection to the oil valve. (For connection size, see the dimensional drawing for the tap-changer.)

1.3 Required material

- Rags for cleaning
- Single-phase diagram for tap-changer
- Gasket for transformer flange
- Insulating paper
- Insulating bushings
- Wooden block as spacer
- Grease (ball bearing grease) GULF-718 EP, Mobil Grease 28, SHELL Aero Shell Grease 22 or similar
- Oil, see Section 1.4
- Dimensional drawing for the tap-changer for connection dimensions of the oil valve
- Flange for connection to the oil conservator flange when filling under vacuum; see Fig. 38.
- Oil valves for connection to flange with dimensions according to Fig. 51. Can be ordered from ABB.
- Equipment for oil filling
- Sealing tape
- Maintenance guide for tap-changer
- Circuit diagram the motor-drive mechanism
- Oil filter (when there is a common conservator for both the transformer and the tap-changer, this can be ordered from ABB).

1.4 Oil

The oil quality should be I -30° according to IEC 60296:2012, and comply with IEC 60422:2008. Upon commissioning, the break-down value should be at least 40 kV/2.5 mm according to IEC 60156.

Type designation		Oil weight (kg) (The oil for the conservator is not included.)
UCG.., VUCG..	380/..., 650/..., 750/...	150
UCG.., VUCG..	1050/...	185

Table 1. Weight of oil in kg.

WARNING

Do not energize the transformer until oil has been filled according to Chapter 6.

An UCG.B/VUCG.B requires twice and UCG.T/VUCG.T three times the amount specified above since they have two and three diverter switch housings respectively.

1.5 Oil conservator

The tap-changer must be connected to an oil conservator. ABB recommends using a separate conservator for the tap-changer with both the oil and air side separated from the main conservator of the transformer.

The volume of the conservator should be such that there is still oil in the conservator even at the lowest expected oil temperature, and such that no flooding can occur at the expected highest oil temperature. Even tap-changers consisting of more than one unit require only one conservator.

A suitable dimension of the tube for connection to the conservator is an inner diameter of approximately 20 mm. The tube should be inclined at least 3 degrees to avoid gas pockets in the tube. A valve in the connection to the conservator is recommended.

The conservator must be equipped with a breathing device that does not allow moist air into the conservator and that permits the gas to dissipate.

The conservator should also be equipped with an oil level indicator, and an alarm contact for low oil level is recommended.

1.6 Oil filter unit for continuous oil filtration

If the tap-changer should have an oil filter unit for continuous oil filtration from ABB, installation and commissioning instructions are found in the manual delivered with the unit.

1.7 Weights

- Motor-drive mechanism type BUE: approximately 155 kg
- Motor-drive mechanism type BUL2: approximately 95 kg

The weights of the motor-drive mechanism and drive-shaft system are not included in the weights given in Tables 2 and 3.

1.8 Tightening torques

The following tightening torques are recommended:

For metallic screw joints:	M6	10 Nm	±10 %
	M8	24.5 Nm	±10 %
	M10	49 Nm	±10 %
	M12	84 Nm	±10 %
For non-metallic screw joints:	M10	9 Nm	±10 %
	M12	13 Nm	±10 %
	M16	22 Nm	±10 %

if not otherwise stated in this guide.

On-load tap changer type designation			Required oil	Selector C		Selector III		Selector F	
	BIL	Current	in kg	Without oil	Total	Without oil	Total	Without oil	Total
UCG.N	380	300-600	185	319	504	1235	1420	545	730
	650	300-600	185	329	514	1415	1600	562	747
	1050	300-600	230	349	579	1475	1705	582	812
UCG.T	380	300-600	555	917	1472	985	1540	1185	1740
	650	300-600	555	947	1502	1105	1660	1365	1920
	1050	300-600	690	1007	1697	1145	1835	1425	2115
	380	1200-1500	555	1007	1562	985	1540	1185	1740
	650	1200-1500	555	1037	1592	1105	1660	1365	1920
	1050	1200-1500	690	1097	1787	1145	1835	1425	2115
UCG.B	380	300-600	370	633	1003	370	740	1010	1380
	650	300-600	370	653	1023	430	800	1130	1500
	1050	300-600	460	693	1153	450	910	1170	1630
UCG.E	380	300-600	185	289	474	395	580	395	580
	650	300-600	185	299	484	455	640	455	640
	1050	300-600	230	319	549	475	705	475	705
	380	1200-1500	185	319	504	395	580	395	580
	650	1200-1500	185	329	514	455	640	455	640
	1050	1200-1500	230	349	579	475	705	475	705

Table 2. Weights for type UCG.

On-load tap changer type designation			Required	Selector C		Selector III		Selector F	
	BIL	Current	oil in kg	Without oil	Total	Without oil	Total	Without oil	Total
VUCG.N	380	450-800	185	344	529	440	625	570	755
	650	450-800	185	354	539	450	635	587	772
	1050	450-800	230	374	604	470	700	607	837
VUCG.T	380	450-800	555	942	1497	1101	1656	1260	1815
	650	450-800	555	972	1527	1131	1686	1440	1995
	1050	450-800	690	1032	1722	1191	1881	1500	2190
	380	800-1800	555	1032	1587	1224	1779	1260	1815
	650	800-1800	555	1062	1617	1254	1809	1440	1995
	1050	800-1800	690	1122	1812	1314	2004	1500	2190
VUCG.B	380	450-800	370	658	1028	816	1186	1060	1430
	650	450-800	370	678	1048	836	1206	1180	1550
	1050	450-800	460	718	1178	876	1336	1220	1680
VUCG.E	380	450-800	185	314	499	367	552	420	605
	650	450-800	185	324	509	377	562	480	665
	1050	450-800	230	344	574	397	627	500	730
	380	800-1800	185	344	529	408	593	420	605
	650	800-1800	185	354	539	418	603	480	665
	1050	800-1800	230	374	604	438	668	500	730

Table 3. Weights for type VUCG.

2. Receiving

2.1 Unpacking

Check that the packages are free from transport damage. Open the covers of the transport boxes, Remove the supporting block of wood. If any package is damaged, a careful investigation must be carried out.

Lift the tap-changer parts by their lifting eyes according to Fig. 4.

2.2 Inspection on receipt

1. Check that the diverter switch housing, tap selector, motor-drive mechanism and accessories are undamaged.
2. If transport damage is found, and it is judged that correct operation of the tap-changer is not possible, a damage report should be sent to the insurance company. It is also recommended that photographs be taken of the damaged parts. Mark the photos with ABB's reference number and the serial number of the tap-changer and send them to ABB.
3. Check that the parts delivered, type designations and the serial numbers agree with the delivery documents, e.g. the packing list or ABB's order acknowledgement. The serial numbers to be checked are those on the rating plate, on the diverter switch housing and on the tap selector. For locations; see Fig. 3. The serial number on the parts belonging to one tap-changer unit should all be the same.

2.3 Temporary storage before assembly

If the tap-changer is not to be assembled immediately, once the delivery has been approved, the tap-changer and the motor-drive mechanism must be stored at a warm and dry indoor location. Keep the units in their plastic enclosures and do not remove the drying agent until assembly.

3. Installation in the transformer

Either the cover-mounting method or yoke-mounting method is used.

WARNING

The intermediate gear and the insulating shaft of the diverter switch housing moves during operation. Maintain a safe distance during operation to avoid injuries!

The diverter switch housing and the tap selector are designed to be lifted by the lifting eyes; see Fig. 4.

WARNING

The angle between the lifting slings should be no more than 90°.

WARNING

Lowering the complete tap-changer to the floor without support entails a risk for tipping, personal injury and equipment damage.

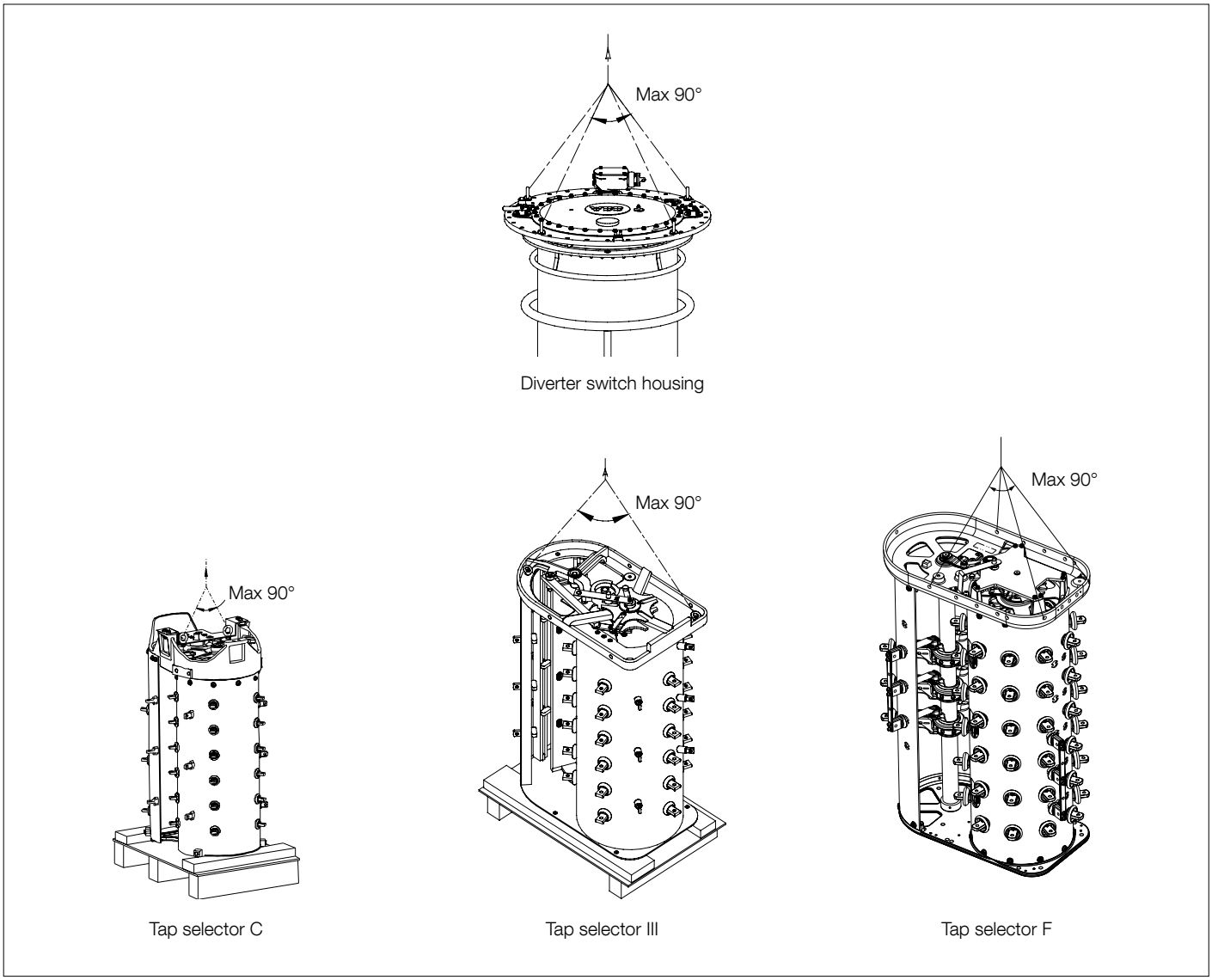

Fig. 4. How to lift the diverter switch housing and the tap selector.

3.1 Cover-mounting

The diverter switch housing and the tap selector are delivered in separate packaging.

3.1.1 UCG/VUCG with tap selector size C

1. Unpack the diverter switch housing and the tap selector, and remove the drying agent.
2. Fit the gasket into the tap-changer flange on the transformer cover; see Fig. 6. (This gasket is not included in the delivery).
3. Remove the transport locking and the lifting eyes with fasteners from the top section of the tap selector; see Fig. 8.

CAUTION

Do not operate the tap selector until it is connected to the diverter switch housing.

4. Lift the diverter switch housing by the lifting eyes and remove the transport support. Remove the three limbs, see Fig. 9.
5. Lift the diverter switch housing into position and fit the tap selector to the diverter switch housing; see Fig. 10. The tap selector drive pin must fit into the large gear wheel slot; see view A-A.

CAUTION

The drive crank on the tap selector may only be moved slightly to engage the slot in the large gear wheel of the diverter switch housing.

6. Insert the fastening screws (six hexagon screws M8x35) and washers. Tighten the screws.
7. **If the tap-changer is equipped with a tie-in resistor** for mounting under the tap selector, the tie-in resistor is mounted after joining the tap selector to the diverter switch housing. After mounting the tie-in resistor, the tap-changer must not be set down so that it stands on the tie-in resistor. It must be suspended from an overhead crane, for example.

WARNING

Lowering the complete tap-changer to the floor without support entails a risk for tipping, personal injury and equipment damage.

8. Lift the tap-changer by the lifting eyes as shown in Fig. 4 and lower it carefully through the opening in the transformer top cover; see Fig. 5. Correctly position the tap-changer for mounting the outer shaft system (see transformer drawing). The studs on the flange on the transformer cover shall fit into the holes in the flange of the diverter switch housing. Fit twenty-four washers and M12 nuts (not included in the delivery); see Fig. 6. Tighten the nuts.

WARNING

The diverter switch housing and the tap selector contain moving parts. Observe caution!

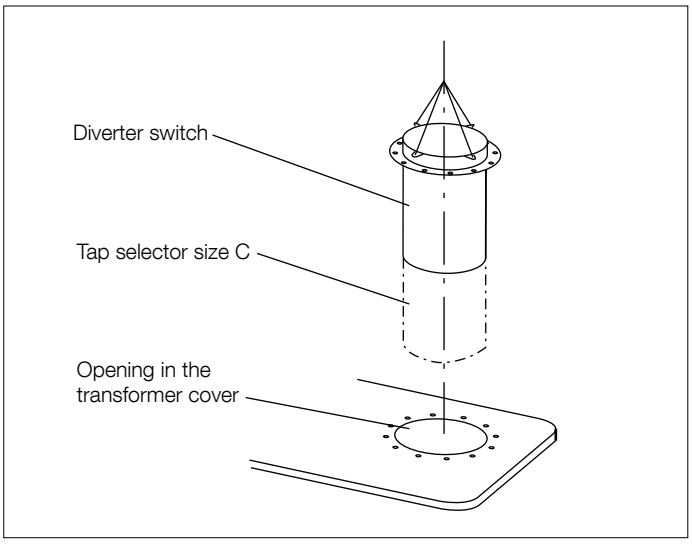

Fig. 5.

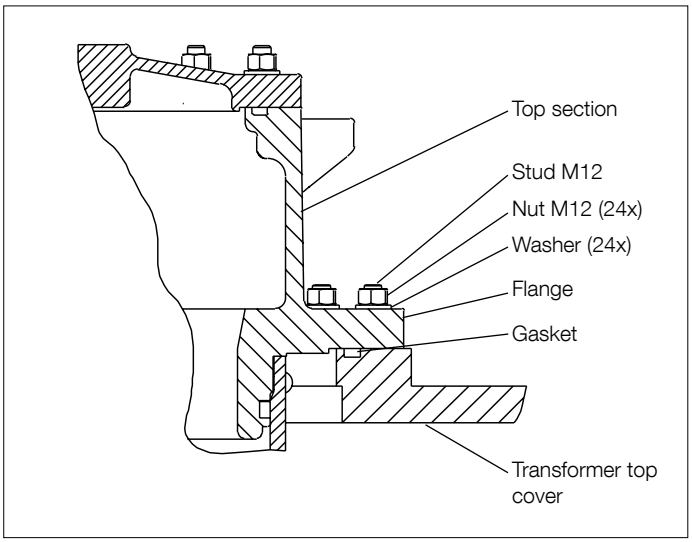

Fig. 6.

9. Connect the supplied conductors between the diverter switch housing and tap selector; see Fig. 10. The conductor ends and their connecting points have the same markings. The number of conductors varies depending on the rated through-current and the type of connection.
10. If the impulse withstand voltage to ground (BIL) exceeds 380 kV, insulate the connections on the tap selector by winding paper around them to a thickness of approximately 3 mm; see Fig. 7. The paper should be of the same quality as used for insulation of conductors within the active part of the transformer.

CAUTION

After mounting the shielding ring, the tap-changer must not stand on the shielding ring.

11. Continue with section 3.3.

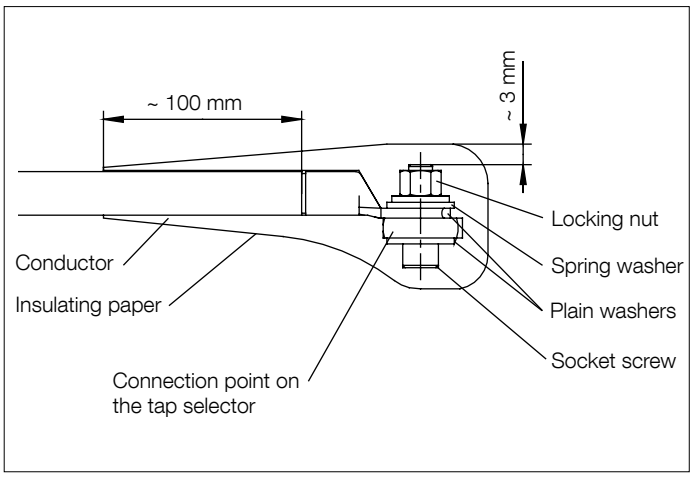

Fig. 7.

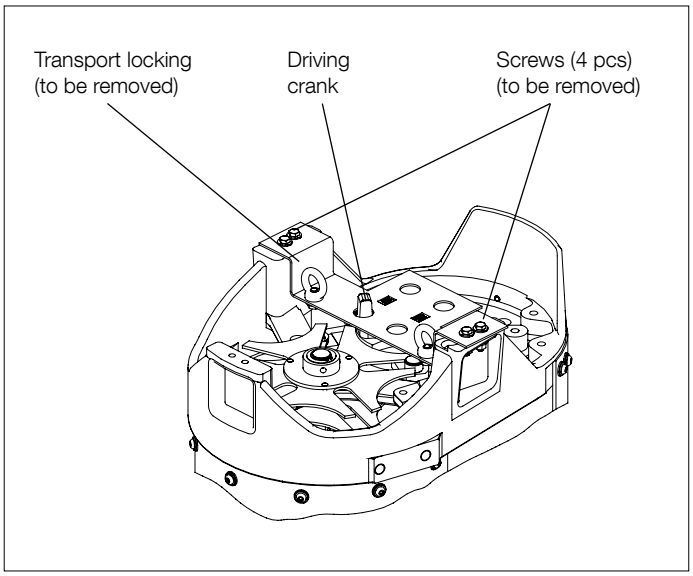

Fig. 8. Tap selector size C, top view.

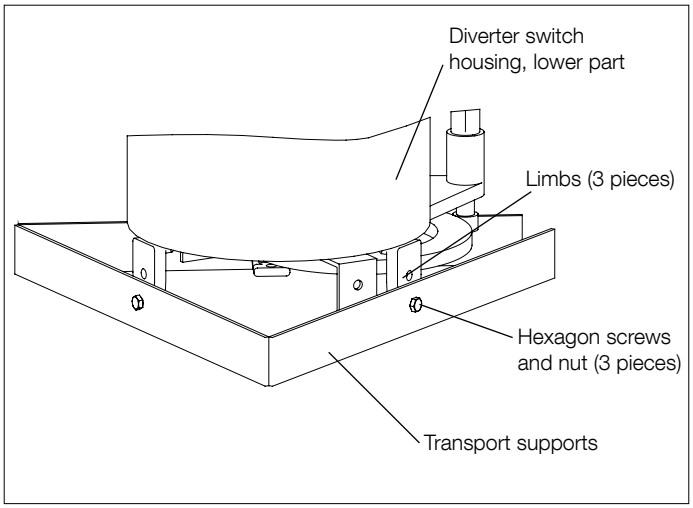

Fig. 9.

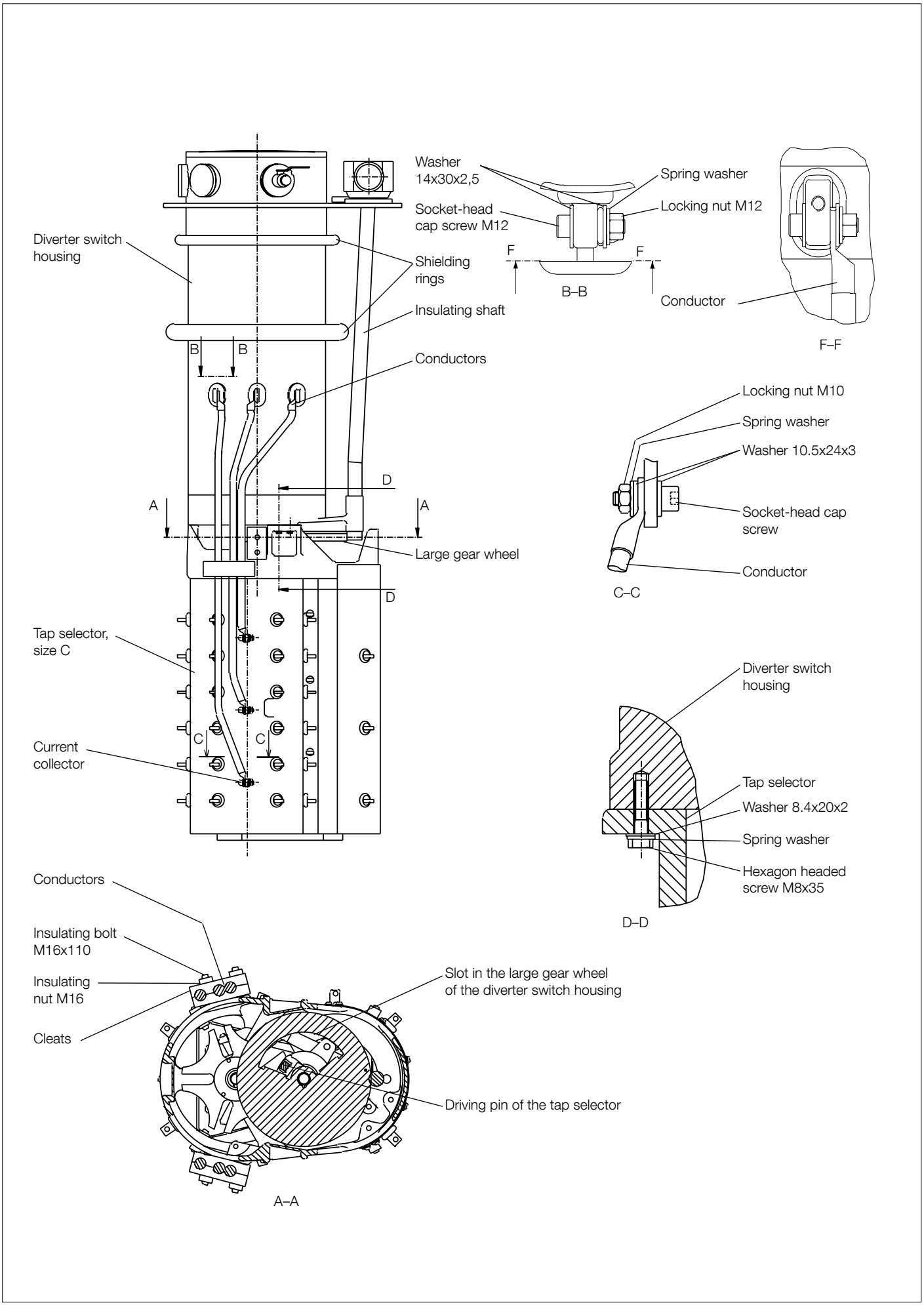

Fig. 10. Diverter switch UCG/VUCG, and tap selector, size C.

3.1.2 UCG/VUCG with tap selector size III or F

1. Unpack the diverter switch housing and the tap selector, and remove the drying agent.
2. Fit the gasket into the tap-changer flange on the transformer cover; see Fig. 12. (This gasket is not included in the delivery.)
3. Lift the diverter switch housing by the lifting eyes as shown in Fig. 4 and lower it carefully through the opening in the transformer top cover; see Fig. 11. Correctly position the diverter switch housing correctly for mounting the outer shaft system (see transformer drawing). The studs on the flange on the transformer cover shall fit into the holes in the flange of the diverter switch housing. Fit twenty-four washers and M12 nuts (not included in the delivery); see Fig. 12. Tighten the nuts.
4. Position the tap selector for joining to the diverter switch housing. Lift by the lifting eyes as shown in Fig. 4.
5. **If the tap-changer is equipped with a tie-in resistor** for mounting under the tap selector, the tie-in resistor is mounted after joining the tap selector to the diverter switch housing. After mounting the tie-in resistor, the tap-changer must not be set down so that it stands on the tie-in resistor. It must be suspended from an overhead crane, for example.
   If the tap-changer is equipped with a tie-in resistor switch, the switch is mounted under the tap selector upon delivery. A special support in the box ensures that it stands on the tap selector bottom. If this special support is removed from the box, the tap selector can stand on this when joining to the diverter switch housing. After joining, the complete tap-changer is lifted and the special support is removed. The complete tap-changer must not be set down on the special support. It must be suspended from an overhead crane, for example.

WARNING

Lowering the complete tap-changer to the floor without support entails a risk for tipping, personal injury and equipment damage.

6. Remove the transport locking and the lifting eyes with fasteners from the top section of the tap selector; see Fig. 13a-b.

CAUTION

Do not operate the tap selector until it is connected to the diverter switch housing.

7. Lift the diverter switch housing into position and fit the tap selector to the diverter switch housing; see Fig. 14. The tap selector drive pin must fit into the large gear wheel slot; see view A-A.

CAUTION

The drive crank on the tap selector may only be moved slightly to engage the slot in the large gear wheel of the diverter switch housing.

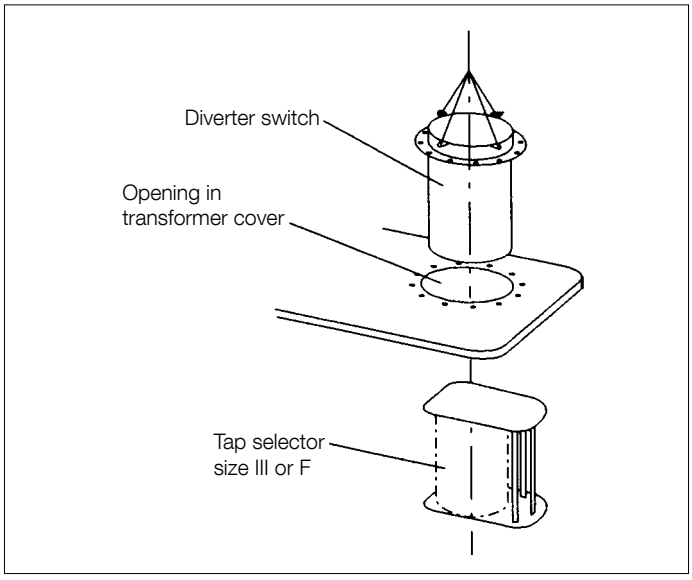

Fig. 11.

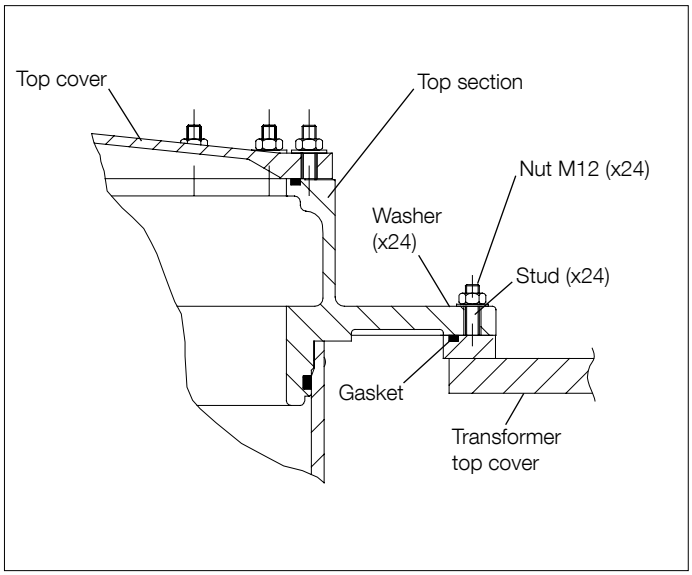

Fig. 12.

8. Insert four M10x40 screws and washers through the tap selector upper part to the four supports of the diverter switch housing. Tighten the screws; see view E-E, Fig. 14.

WARNING

The diverter switch housing and the tap selector contain moving parts. Observe caution!

9. Connect the supplied conductors between the diverter switch housing and tap selector. The conductor ends and their connecting points have the same markings. Fasten the conductors with cleats. The number of conductors varies depending on the rated through-current and the type of connection.

WARNING

The wires coming from the transformer's regulating winding may not pass through the spaces between the change-over selector and the fine selector.

10. If the impulse withstand voltage to ground (BIL) exceeds 380 kV, insulate the connections on the tap selector by winding paper around them to a thickness of approximately 3 mm; see Fig. 9. The paper should be of the same quality as used for insulation of conductors within the active part of the transformer.
11. If the impulse withstand voltage to ground (BIL) exceeds 380 kV, mount the supplied shielding ring (TS 11) at the bottom plate of the tap selector; see view D–D.

CAUTION

After mounting the shielding ring, the tap-changer must not stand on the shielding ring.

12. Continue with Section 3.3.

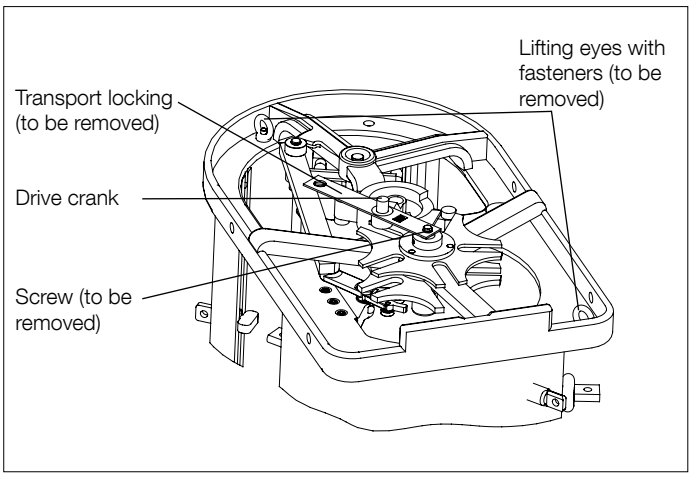

Fig. 13a. Tap selector size III, top view.

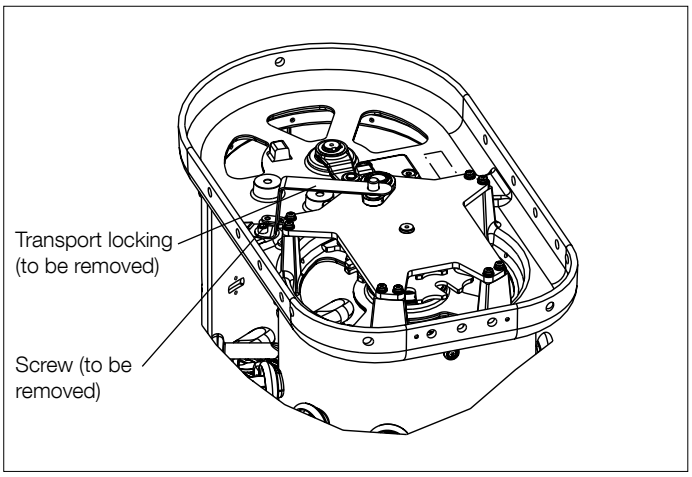

Fig. 13b. Tap selector size F, top view.

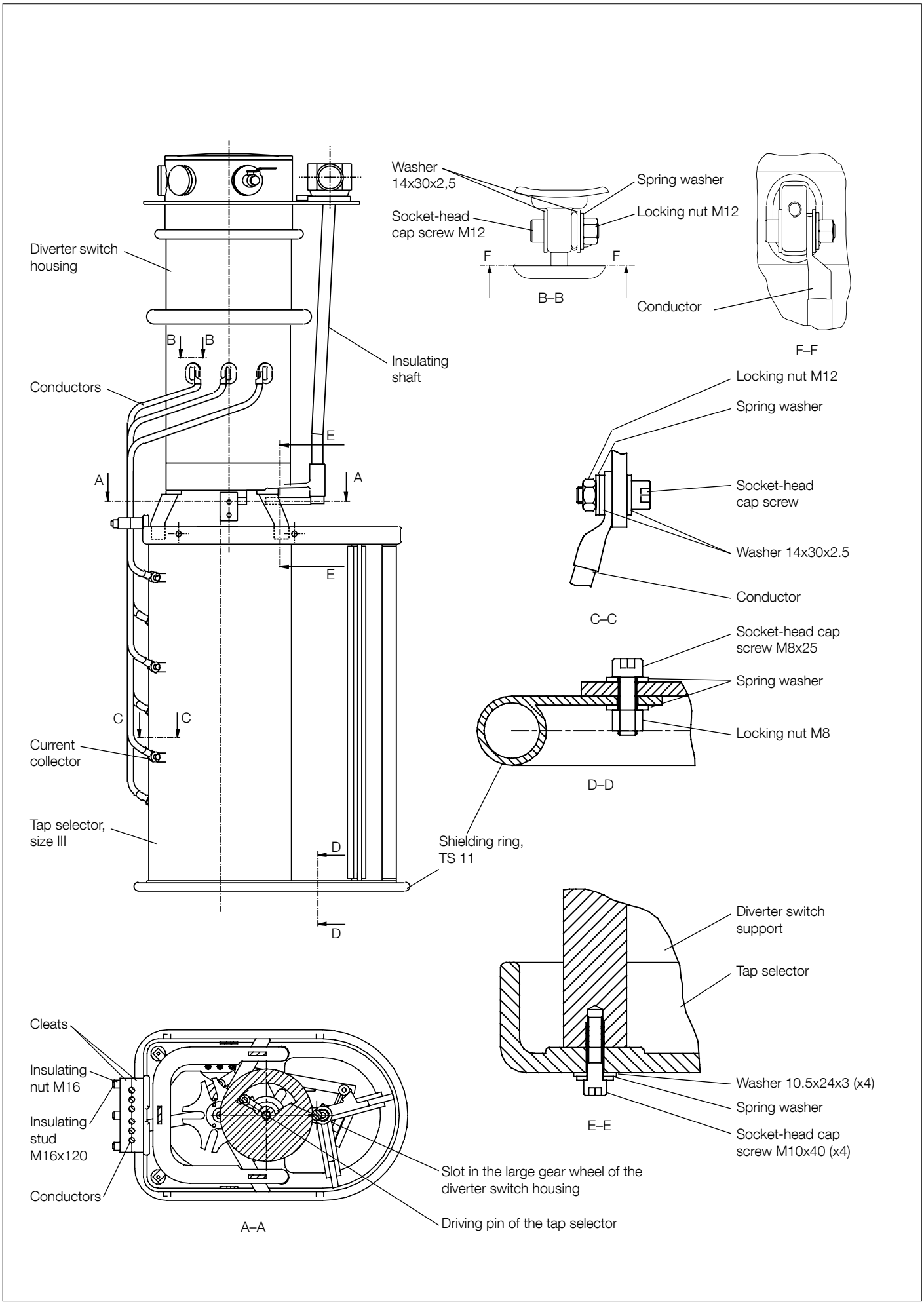

Fig. 14. Diverter switch UCG/VUCG, and tap selector III or F.

3.2 Yoke-mounting

(Pre-mounting on active part of the transformer.)

The top section of the diverter switch housing is designed to be divided into an upper and a lower flange (see Figs. 16 and 18) to fit the yoke-mounting.

Before lifting and joining the diverter switch housing to the transformer cover, it is placed on a yoke fork (two beams) that is fastened on the upper transformer yoke; see Fig. 15.

The guide pins used on the yoke fork should be insulated with bushings in order to prevent circulating current in the yoke fork when the transformer is in operation.

Mounting of the tap-changer on the yoke fork can be carried out by two alternative methods depending on when the transformer ratio measurement is carried out:

- Transformer ratio measurement is carried out before the drying process; see Section 3.2.1.
- Transformer ratio measurement is carried out after the drying process; see Section 3.2.2.

For mounting on the transformer cover after the drying process; see Section 3.2.3.

CAUTION

To avoid seizing, do not operate the tap-changer, neither during the drying process nor afterwards, until the diverter switch housing is filled with oil and the tap selector is immersed in oil.

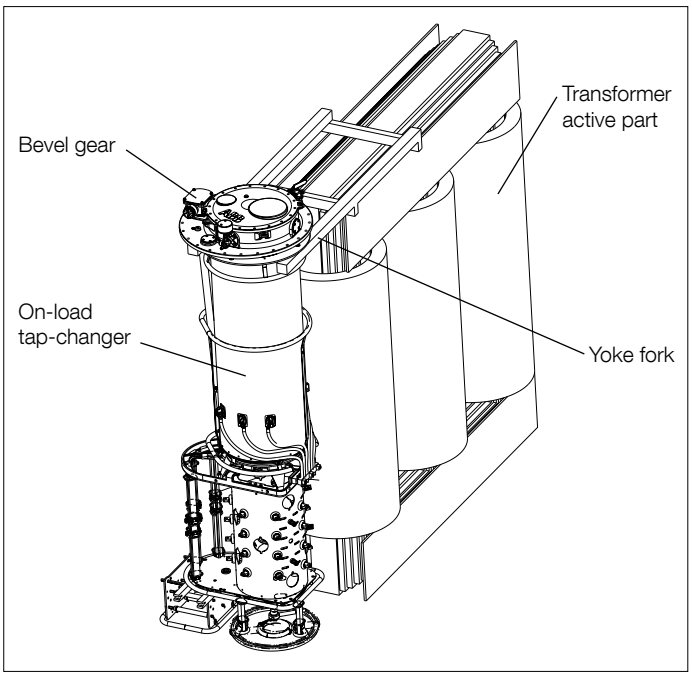

Fig. 15. Yoke-mounting principle.

3.2.1 Mounting when the transformer ratio measurement is carried out before drying

1. Assemble the diverter switch housing and the tap selector according to Section 3.1.3, steps 1, and 4-12.
2. Lift the tap-changer onto the yoke fork (use the lifting eyes at the top of the tap-changer; see Fig. 4). Place the tap-changer in position for mounting the outer shaft system (see transformer drawings). Insert and tighten the supplied guide pins DS 7 and insulating bushings (not included in delivery) in the lower flange; see Fig. 16. The guide pins must be secured by center punch marks in the pins.
3. Mount the conductors between the regulating winding and the tap selector according to Section 3.3.
4. Carry out transformer ratio measurement according to Section 3.4 in this guide.
5. Remove the diverter switch housing cover (see Fig. 18) by removing the screws. Store the cover, fasteners and O-ring at a dust-free location.
6. If the vapor phase process will be used: Remove the plug in the T-coupling for the oil drainage tube. To open the bottom valve, let the bottom valve key (DS16), slide down through the oil drainage tube, and when it has gripped the valve, rotate it in a counter-clockwise direction until it stops after approximately 6 turns; see Fig. 19. Refit the plug.
7. Remove the diverter switch by carefully lifting it straight out of the diverter switch housing by its lifting eye; see Fig. 18. Store the diverter switch at a dry and dust-free location.

WARNING

For VUCG: The vacuum interrupters are sensitive and the diverter switch must thus be handled with care.

8. Remove the oil drainage tube by hand or by means of a pipe wrench, placing a cloth between the tube and the pipe wrench to protect the tube. Store the tube in the diverter switch housing until it is remounted.
9. Remove the four clamp screws, M10 x 35, and the washers that hold the bevel gear; see Fig. 18. Note the position of the bevel gear. Carefully remove the gear housing, and put the parts in a safe place. Store the bevel gear at a dust-free location.

CAUTION

Do not remove the locking device for the bevel gear.

10. Mount the locking device DS 4 on the drive shaft of the tap-changer.

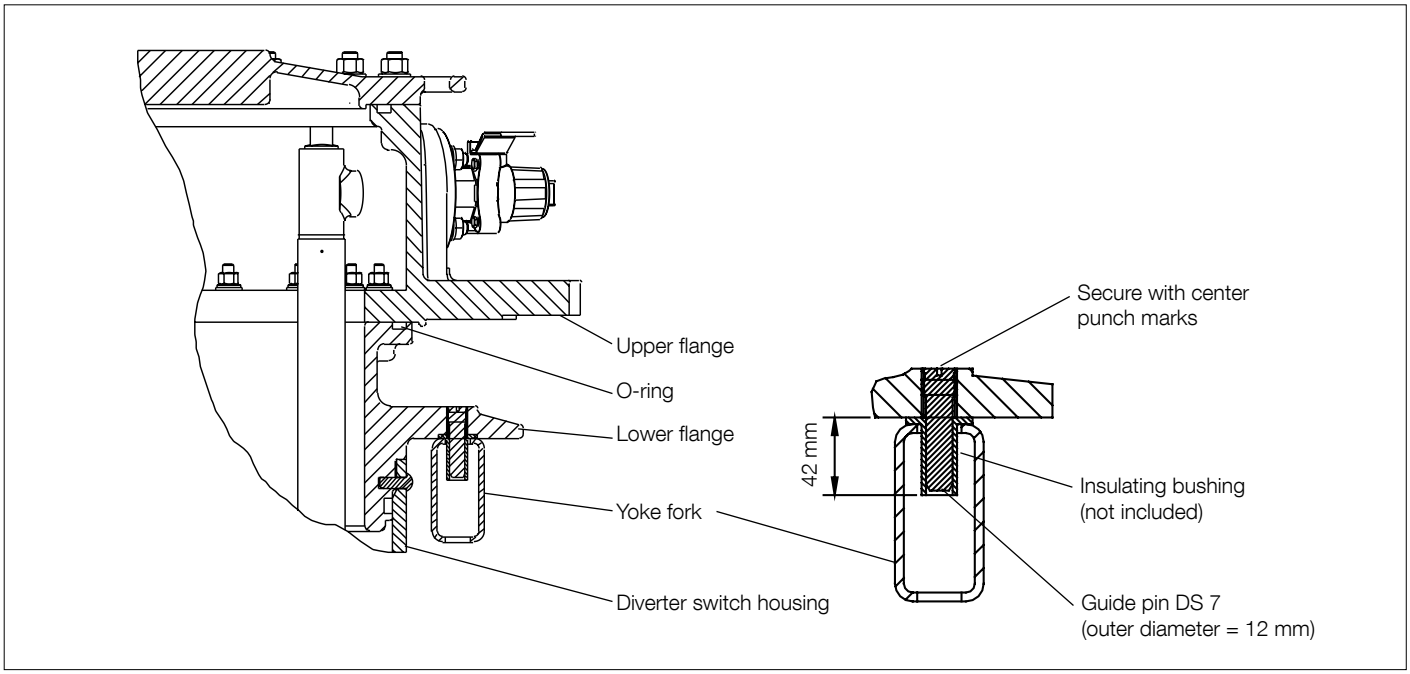

Fig. 16.

CAUTION

The drive shaft must not be rotated.

11. The guide bar for positioning the diverter switch in the housing is secured in the upper flange with screws and washers. Remove the screws and washers. Store the guide bar in the diverter switch housing until it is remounted. Save the screws and washers.
12. Remove the nuts and washers inside the upper flange and remove the flange by lifting it by the lifting eyes. Store the upper flange, and the O-ring at a dust-free location. Save the nuts and washers.
13. The tap-changer is now ready for drying together with the transformer. Follow the instructions in Chapter 4.

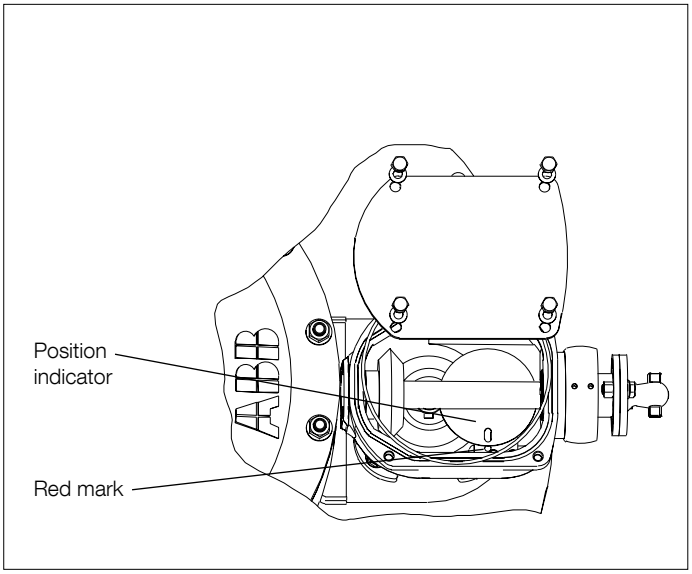

Fig. 17. Bevel gear.

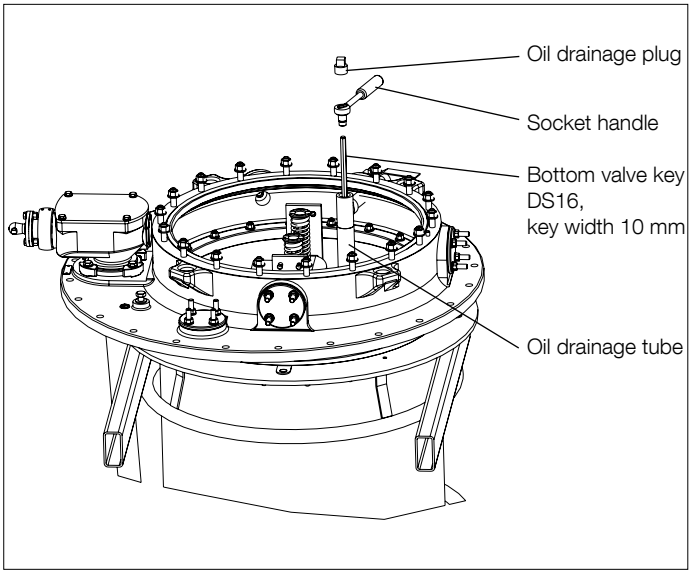

Fig. 19.

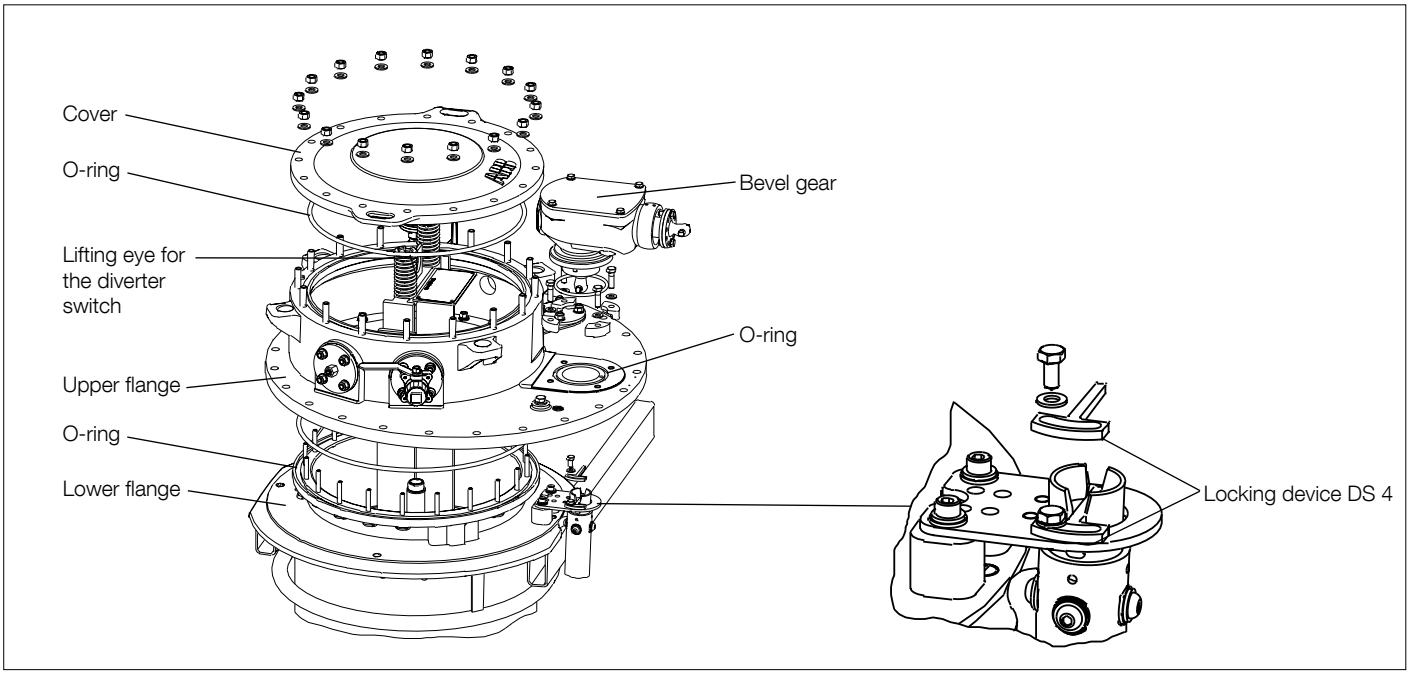

Fig. 18.

3.2.2 Mounting when the transformer ratio measurement is carried out after drying

1. Assemble the diverter switch housing and the tap selector according to Section 3.1.3, steps 1 and 4-12.
2. Follow the instructions according to Section 3.2.1, steps 5-13.
3. Attach the lifting device LL 135 016-A according to Fig. 20.

> The lifting device must be tilted when attaching.

   Lift the tap-changer onto the yoke fork. Place the tap-changer in position for mounting the outer shaft system (see transformer drawing). Insert the supplied guide bolts DS 7 and insulating bushings (not included in delivery) in the lower flange; see Fig. 16. The guide bolts must fit into the holes in the yoke fork and be secured by punch marks in the pins. When the tap-changer is in place, remove the lifting device.
4. Mount the conductors between the transformer winding and the tap selector according to Section 3.3.
5. The tap-changer is now ready for drying together with the transformer. Follow the instructions in Chapter 4.

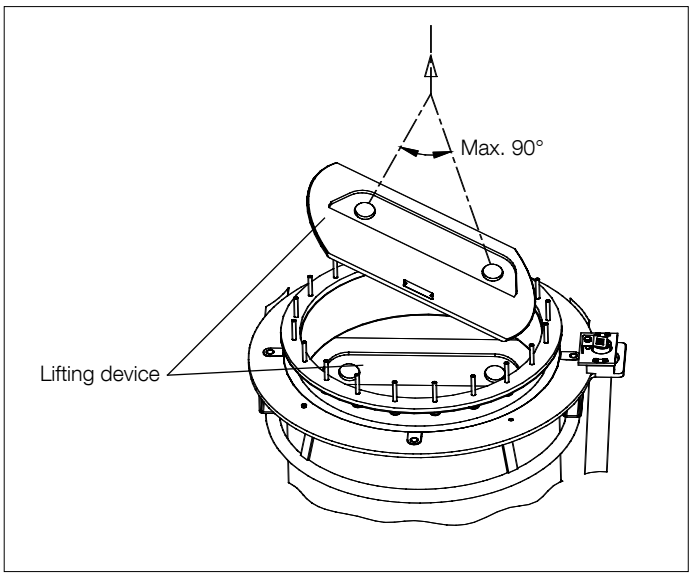

Fig. 20. Attachment of lifting device.

3.2.3 Mounting on transformer cover (after the drying process)

1. After the transformer cover is mounted, place the gasket in the flange for the tap-changer. (This gasket is not included in the tap-changer delivery.)

Do not insert the studs for the upper flange in the transformer cover flange. This is carried out at step 8.

2. Remove the locking device DS 4 from the drive shaft; see Fig. 18.

CAUTION

Be careful not to drop the locking device and the screw.

CAUTION

The drive shaft must not be rotated.

3. Place the O-ring in its groove in the lower flange; see Fig. 16.
4. Place the upper flange over the opening in the transformer cover. Turn the upper flange so that the flange for the bevel gear is aligned with the drive shaft. The screws in the lower flange must fit into the holes in the upper flange; see Fig. 21.
5. Lift the tap-changer slowly until it just touches the upper flange. Use lifting device LL 136 016-D. Attach the device at the lower flange sides. The lifting device must be tilted when attaching and removing; see Fig. 20.
6. When the flanges touch, fit twenty M8 locking nuts and washers. Turn the nuts alternately until fully tightened. Retighten all nuts to 24.5 Nm. After tightening the nuts, remove the lifting device.
7. Place the O-ring for the bevel gear in its groove in the upper flange; see Fig. 22. Remount the bevel gear unit in the position it had before removal, and make sure that the pin in the spherical shaft end fits into the drive shaft slot without rotating the drive shaft. Secure the gear unit in the flange with its four clamping screws M10x35 and washers.

CAUTION

The gear box must not be forced down. If the coupling does not engage, lift the gear box and adjust the setting of the drive pin.

8. Insert 24 studs; see Fig. 21, through holes in the upper flange, down into the threaded holes in the flange of the transformer cover. If the studs do not fit, the position of the tap-changer must be adjusted, which may require lifting.
   Lift by the lifting eyes as shown in Fig. 4. After mounting the studs, remove the lifting device and tighten the nuts.
9. Mount the oil drainage tube; see Fig. 19. If a pipe wrench is used, there must be cloth protection between the wrench and the tube.
10. Mount the guide bar for the diverter switch; see Fig. 18. Fit the washers and screws and tighten.
11. Remove the plug at the end of the T-coupling (see Fig. 23), slide down the bottom valve key and close the valve by turning the key clockwise approximately 6 turns. Tighten to 40 Nm. Refit the plug.
12. Install the diverter switch according to Section 4.3.

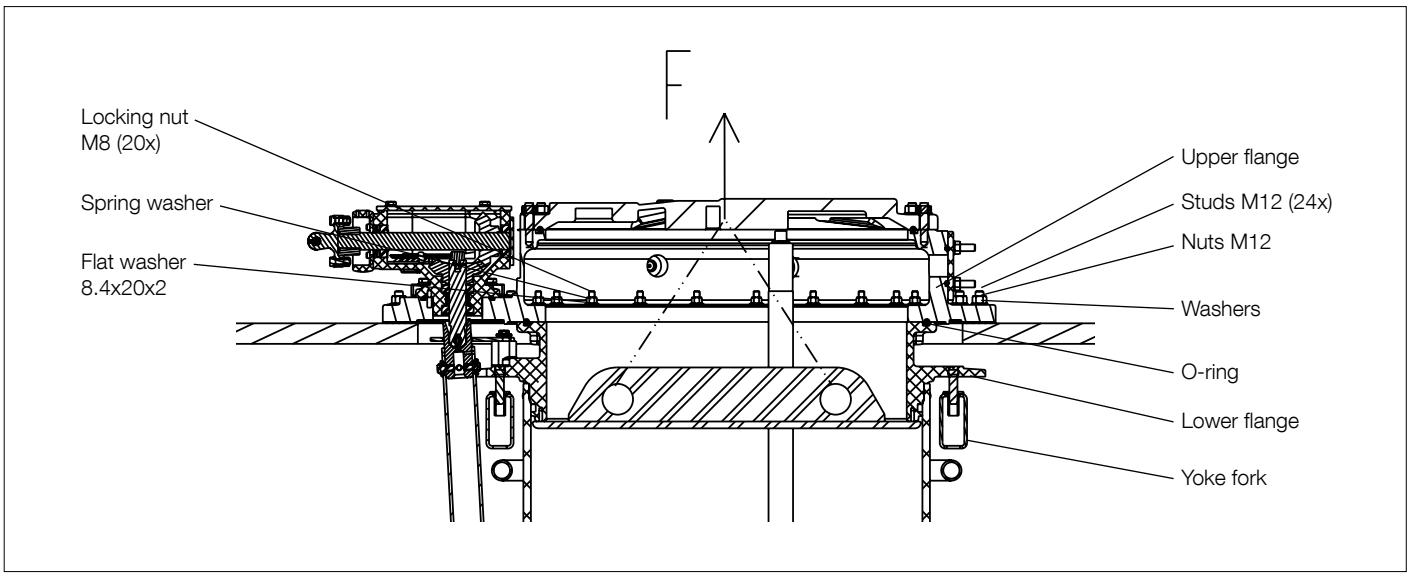

Fig. 21.

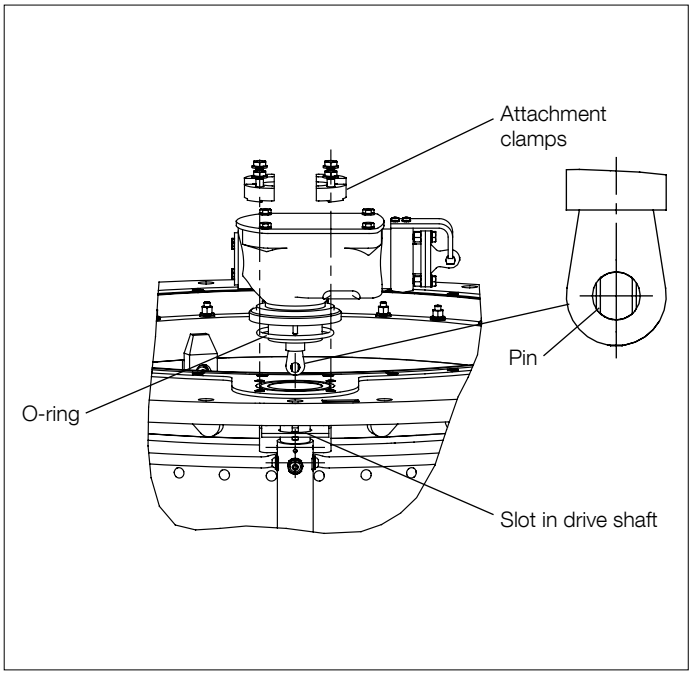

Fig. 22.

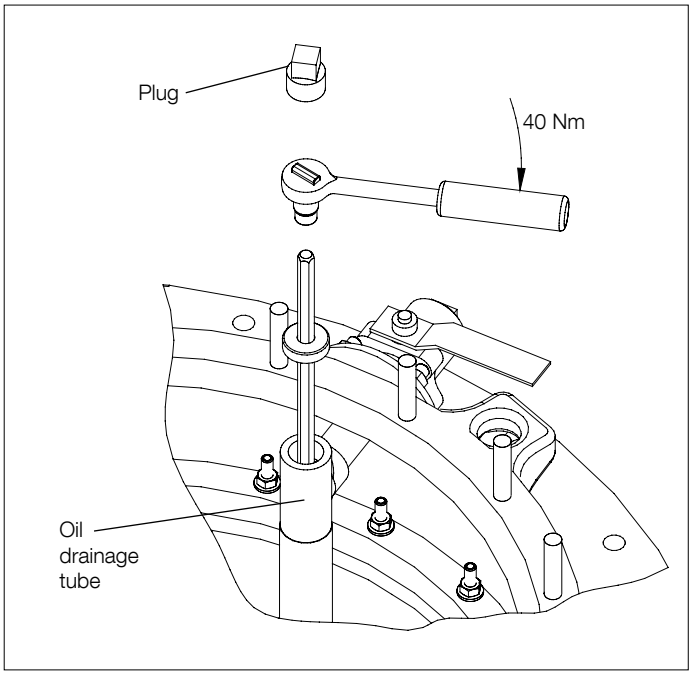

Fig. 23.

3.3 Connection to terminals

Connection to the tap selector should follow the connection diagram supplied with the tap-changer.

In order to obtain maximum reliability for the tap selector contacts, the temperature rise of the conductors connected to the tap selector should be kept as low as possible and should never be more than 30K above the surrounding oil.

CAUTION

All terminals must have conductors or connections.

If there are connections between parallel conductors from the diverter switch on the tap selector terminal, the parallel conductors from the active part of the transformer should also be connected on the tap selector terminals (in order to avoid circulation currents through the tap selector contacts; see Fig. 27).

If the impulse withstand voltage to ground exceeds 380 kV, the conductor connections on the tap selector shall be insulated by winding paper around them to a thickness of 3 mm; see Fig. 9. The paper should be of the same quality as used for insulating conductors within the active part of the transformer.

CAUTION

All connections should be made carefully and in such a way that there is no risk that they can loosen. The conductors must not cause mechanical strain on the tap selector terminal. Each conductor should be curved to take up expansion. See Fig. 25.

CAUTION

It is advisable that the distance between the cylinders or the bars of the tap selector and any conductor be at least 50 mm. The transformer manufacturer is responsible for maintaining sufficiently large insulation distances.

When yoke-mounted, inserts (wooden blocks, or similar) are placed between the yoke fork and the lower flange of the diverter switch housing (see Fig. 27), so that the conductors can be mounted at the correct height. The wooden blocks must be removed before mounting the tap-changer on the transformer cover.

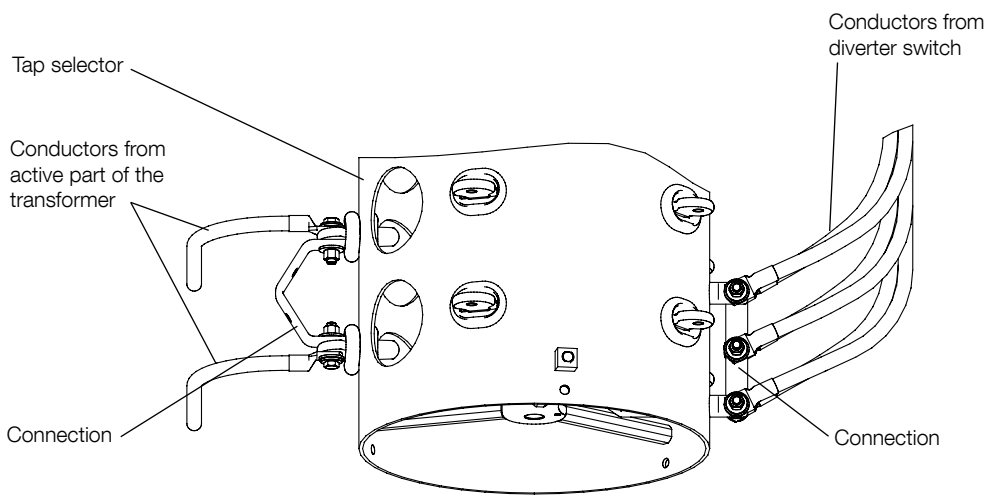

Fig. 24.

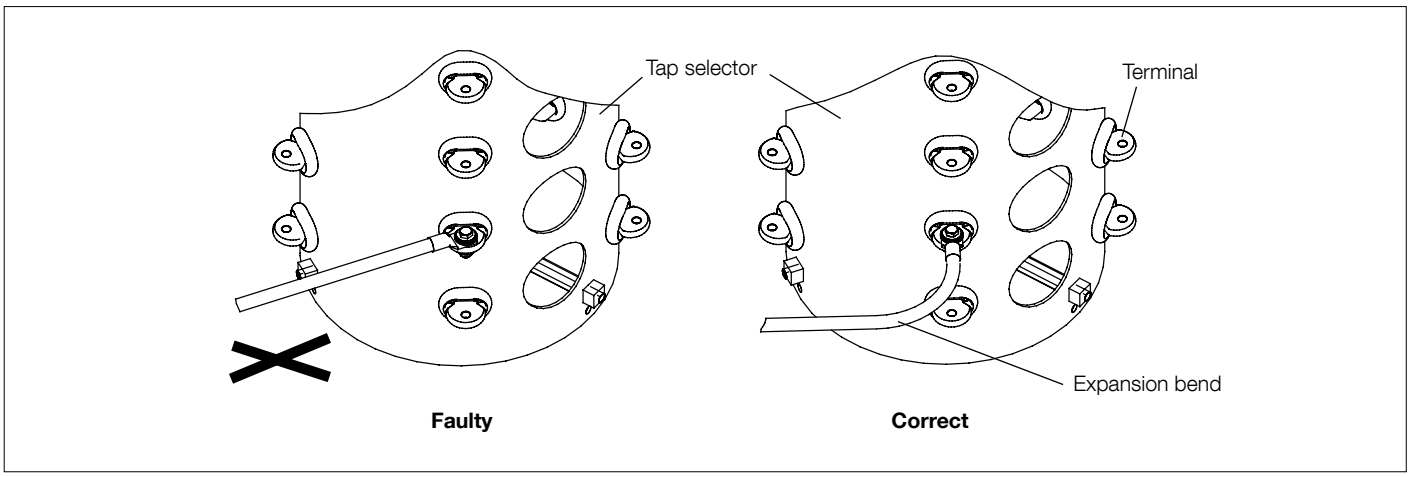

Fig. 25. Connection of conductors to the selector.

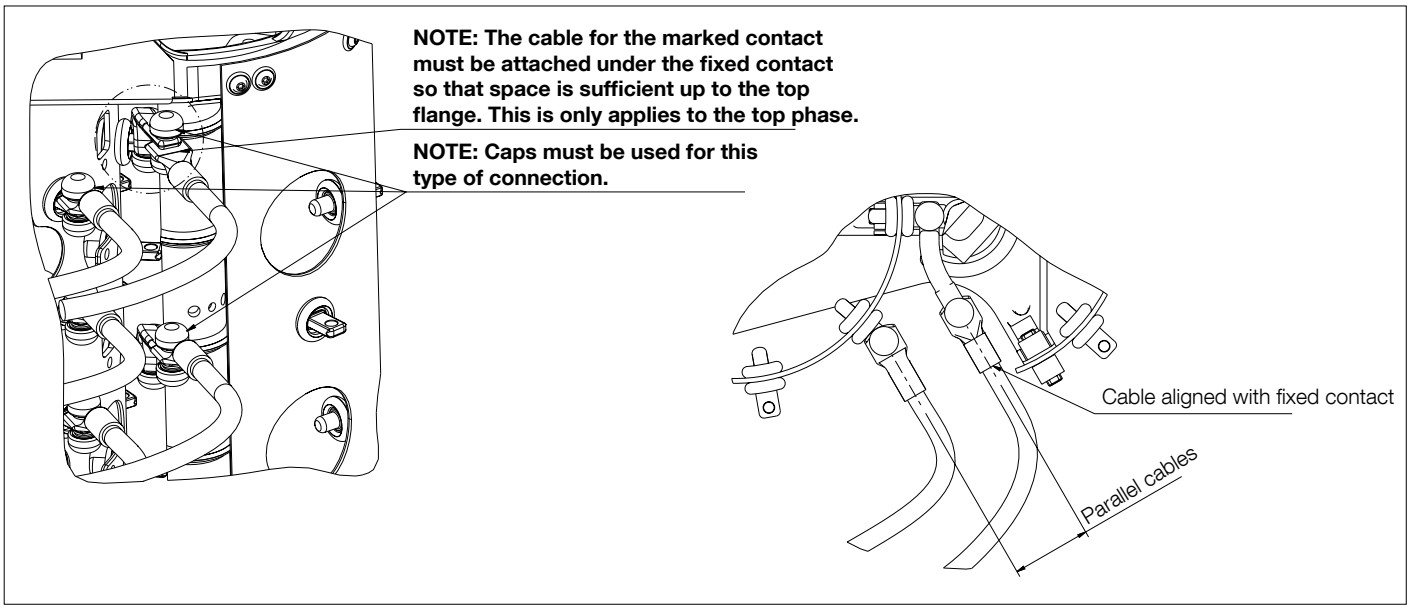

Fig. 26. Connection of conductors to tap selector C.

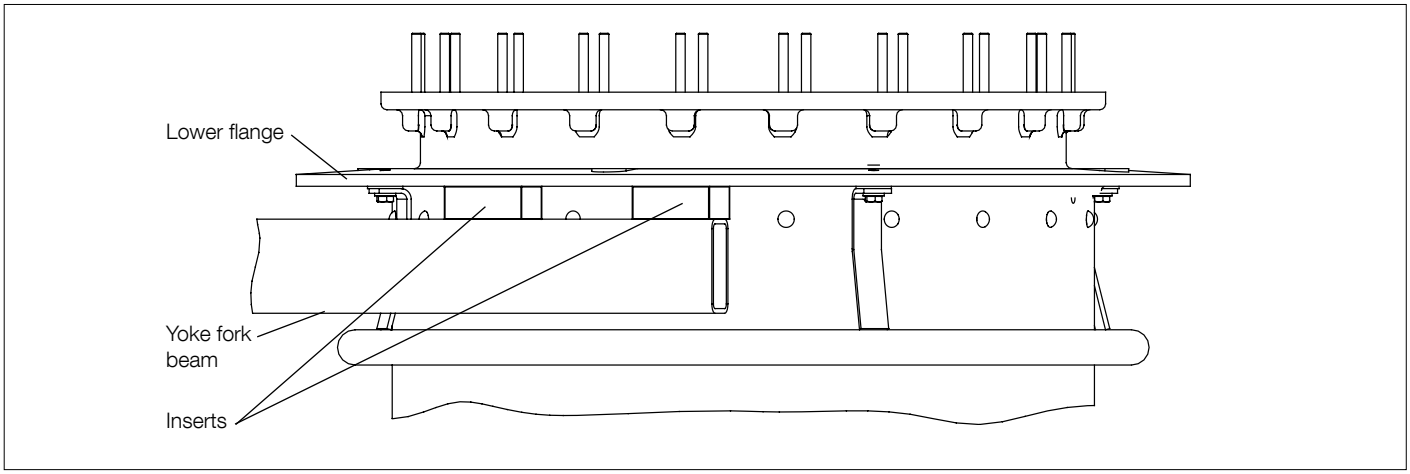

Fig. 27. Mounting of tap-changer on the yoke fork.

3.4 Transformer ratio measurement

The transformer ratio measurement may be taken before or after the drying process.

If it is taken before drying, no drive system is mounted. The tap-changer thus must be operated directly on the shaft coupling of the bevel gear on the upper flange. A special hand crank can be ordered from ABB; see Section 1.2.

If it is taken after drying, it is advisable to do this when the drive system is mounted, after final assembly (see Chapter 5), to simplify operation of the tap-changer.

CAUTION

The tap-changer should be operated through the whole operating range, both in the lower and raise direction, when taking the ratio measurement.

CAUTION

Before the process, the tap-changer may be operated a maximum of three times through the regulating range as long as it is immersed in oil. After the process, the tap-changer must be immersed in oil before operating.

CAUTION

The end-positions must not be overrun during ratio measurement. When operating the tap-changer without the drive system, check the designation of the end-positions on the single-phase diagram and monitor the position indicator on the bevel gear to avoid overrunning the end-position.

CAUTION

Check the voltmeter during tap-changer operations. No rapid voltage drops may occur during operation. If such drops occur, the diverter switch is installed incorrectly or the tap-changer is not correctly connected to the winding.

3.4.1 Transformer ratio measurement before drying

1. Remove the locking device from the gear unit on the upper flange; see Fig. 28. Save the locking device for reuse after transformer ratio measurement. Also remove the cover of the bevel gear to access the position indicator. Save all fasteners and the gasket for reuse. Note the position of the tap-changer.
2. Operate the tap-changer by putting the special hand crank on the shaft coupling of the bevel gear. Adjust the length of the handle. Be careful not to damage the coupling.

When operating through the middle position on a tap-changer with the change-over selector, the torque on the hand crank will be higher.

3. After the measurement, the tap-changer must be operated in the direction and to the position shown in the single-phase diagram as the delivery position. The right position designation should be shown in the window in the position indicator on the bevel gear of the tap-changer, and the window should exactly face the red mark in the bevel gear housing; see Fig. 17. Remount the locking device on the bevel gear and the cover of the bevel gear. Carefully fit the gasket.

3.4.2 Transformer ratio measurement after drying

Take this measurement after the drive system is mounted.

Operate the tap-changer by means of the motor-drive mechanism, in the direction and to the position shown in the single-phase diagram as the delivery position after the measurement.

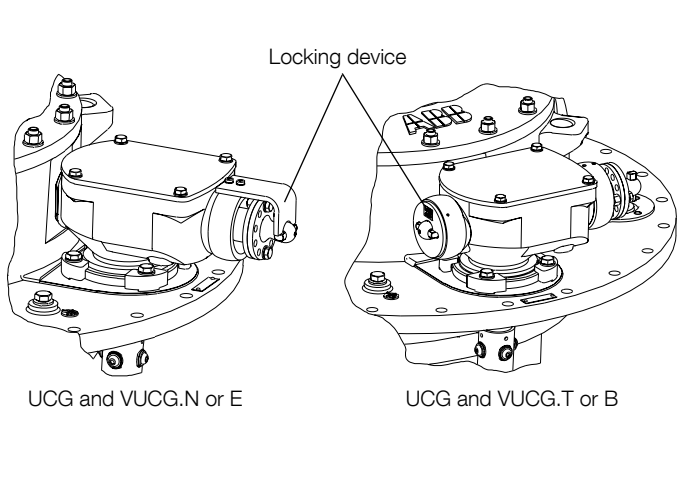

Fig. 28.

4. Drying

The tap-changer is dried together with the transformer using one of the following processes: alternating hot air and vacuum, or vapor phase at a temperature of no more than 135 °C (275 °F).

4.1 Precautions before processing

1. If not done earlier, lift the diverter switch out from the housing; see Section 3.2.1, steps 5 and 7. The pressure relay with its test vent and oil filter, if any, should be removed and protected from dust, e.g. placed in a plastic bag or in their original packing.
2. Do not expose the diverter switch housing to any pressure difference between the inside and outside during the vapor phase process. During the hot air and vacuum process, the maximum permitted pressure differential is 100 kPa at a temperature of 135 °C (275 °F).
   During the vapor phase process, the bottom valve of the diverter switch housing should be open. To open the bottom valve, proceed as follows; see Fig. 19:
   a. Remove the plug on top of the oil drainage tube.
   b. Use the bottom valve key through the oil drainage tube.
   c. Turn the valve counter-clockwise to its stop, approximately 6 turns.
   d. Refit the plug.
   e. Remove the O-ring in the lower flange (for mounting on active part only) before the process.

4.2 Precautions after processing

CAUTION

To avoid seizing, do not operate the tap-changer, neither during the drying process nor afterwards, until it is filled with oil.

1. Make sure that all liquid has been drained from the diverter switch housing after the vapor phase process has been carried out. When cover-mounted, close the bottom valve; see Section 3.2.3, step 10. When yoke-mounted, the valve is closed during refitting of the top section.

CAUTION

Make sure that the bottom valve key is removed after the valve has been closed.

2. The cleats on the upper section of the tap selector that hold the conductors between the diverter switch housing and the tap selector should be retightened (tightening torque 15 Nm) and locked by a method specified by the transformer manufacturer for similar screw joints.
3. If a tie-in resistor from ABB is supplied, its screw joints are to be retightened (tightening torque 15 Nm) and locked using the method specified by the transformer manufacturer for similar screw joints.

4.3 Installation of diverter switch

When yoke-mounted, carry out the steps in Section 3.2.3 before installing the diverter switch.

WARNING

For VUCG: The vacuum interrupters are sensitive and the diverter switch must thus be handled with care.

CAUTION

Check the serial numbers to make sure that the diverter switch is mounted in the correct housing; see Fig. 3.

CAUTION

Make sure that the diverter switch housing is clean and dry, and that no foreign objects (tools, etc.) are left in the housing.

CAUTION

Carefully lower the diverter switch into its housing so that neither the diverter switch nor the housing is damaged.

The diverter switch is provided with guide slots that fit against the guide bar and the oil drainage tube in the diverter switch housing; see Fig. 29. Rotate the diverter switch so the crescent-shaped guide slot is aligned with the oil draining tube.

When the diverter switch is lowered, visually check that its plug-in contacts are aligned with the contacts in the cylinder wall.

In order to ensure that the diverter switch pin has engaged the coupling disk, carry out at least three tap change operations in one direction. A distinct sound is heard when the diverter switch falls into place.

If no sound is heard, the reason can be that the pin fits directly into the slot or that the diverter switch might need to be pushed down while operating the motor-drive.

Carry out another three operations in the same direction while pushing down the diverter switch.

> For UCG, it may be necessary to push and pull the lifting device for the diverter switch a little back and forth while pushing down.

The top part of the diverter switch lifting device should be below the level of the upper part of the housing for the cover when lowered to its final position. Only the springs of the lifting device should be above this level.

Insert the O-ring for the cover in the upper flange. Mount the tap-changer cover. Turn the cover so that the guide pin in the housing is facing the guide hole in the cover. (The cover must be pressed down in order to overcome the force of the springs that hold the diverter switch pressed in place.) Fit the screws and washers and tighten them.

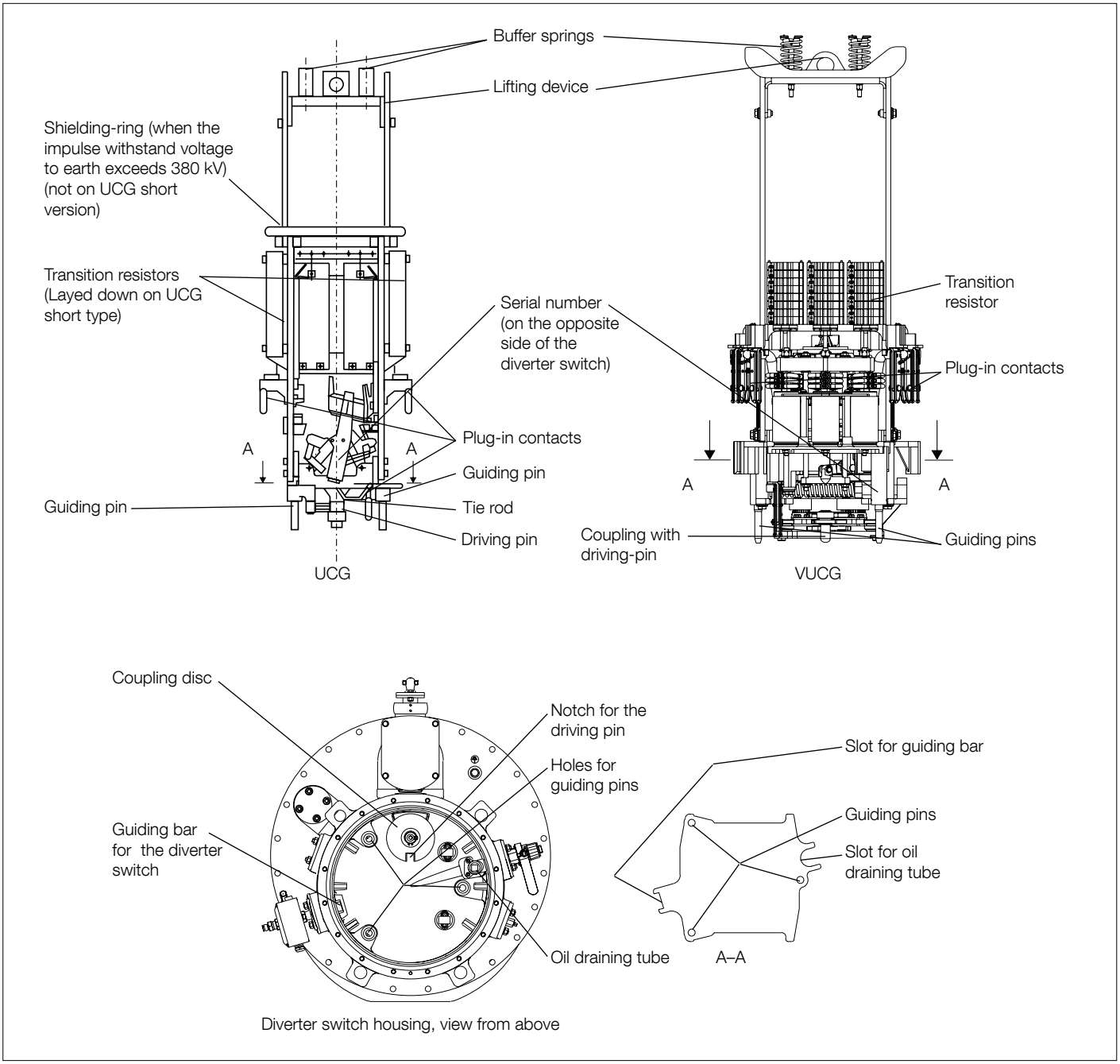

Fig. 29.

5. Final assembly

5.1 Mounting of motor-drive mechanism

See Figs. 30 and 31.

Proceed as follows:

1. Mount the motor-drive mechanism onto the transformer. The mounting holes on the transformer should be level within 1 mm. If adjustment is needed, shims should be used.
2. Install the bevel gear SA 21 on the edge of the transformer cover; see Fig. 32.
3. Check that the position indicator on the motor-drive mechanism shows the same position as the indicator inside the bevel gear of the tap-changer. (The cover has to be removed.)

WARNING

Do not energize the transformer before the tap-changer and the motor-drive mechanism are correctly assembled.

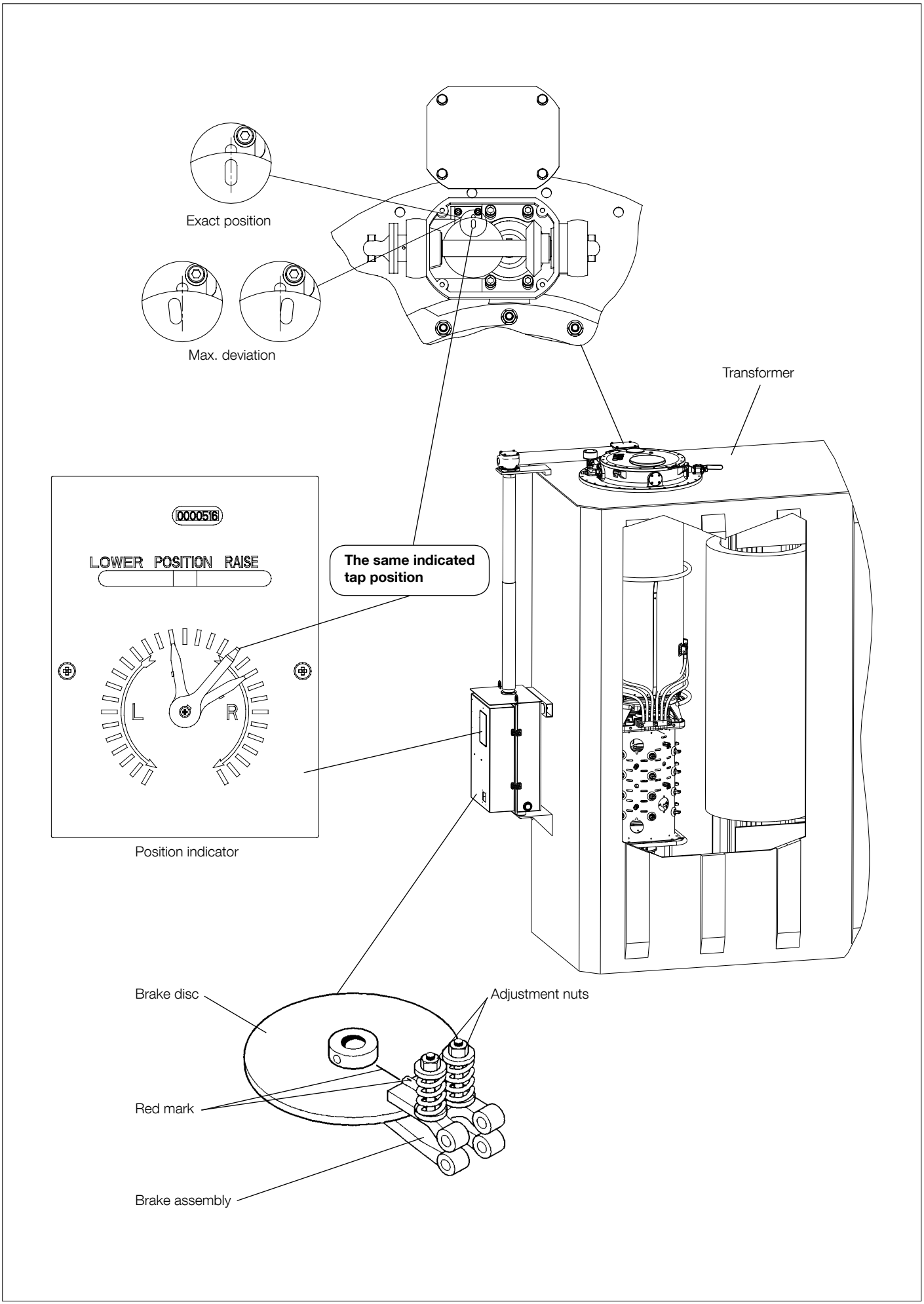

Fig. 30. Position alignment for UCG/VUCG with motor-drive mechanism BUE.

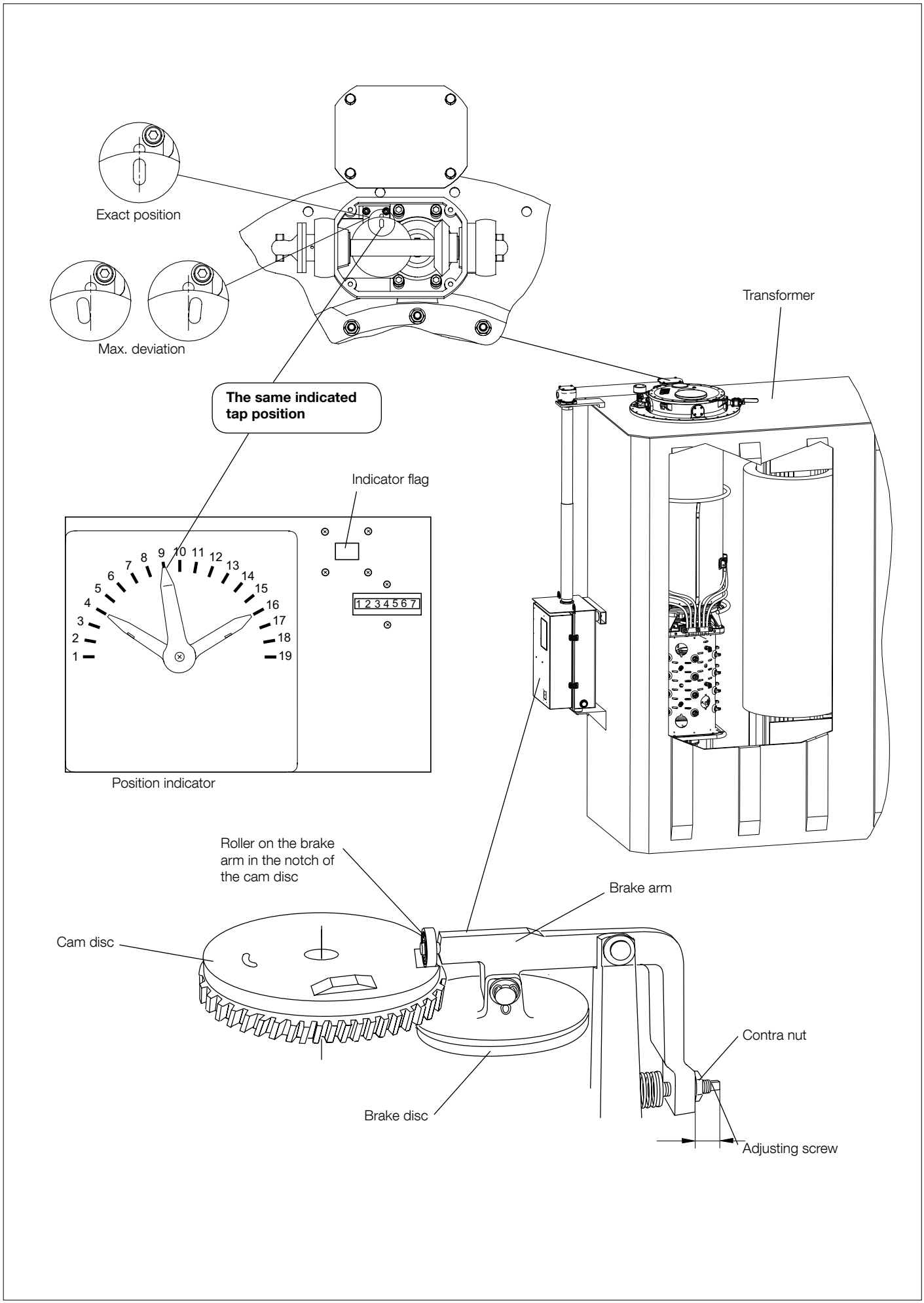

Fig. 31. Position alignment for UCG/VUCG with motor-drive mechanism type BUL.

Connection type T

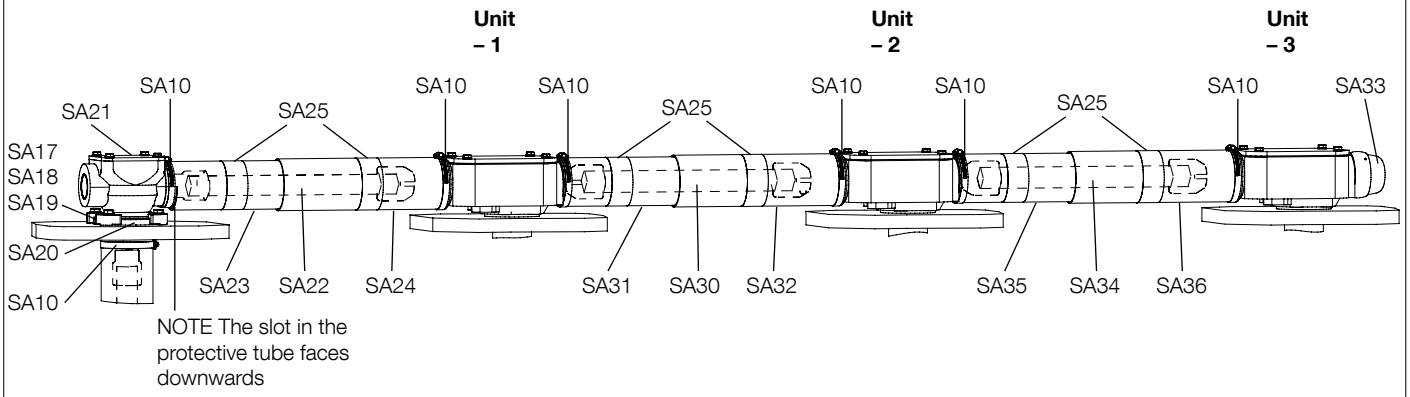

Connection type B

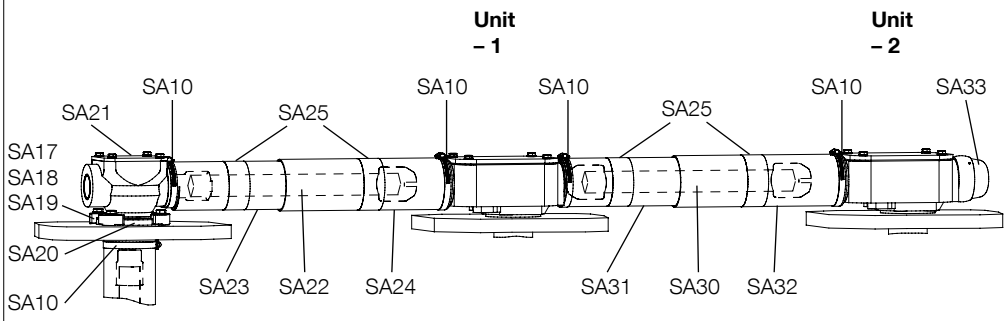

Connection type N or E

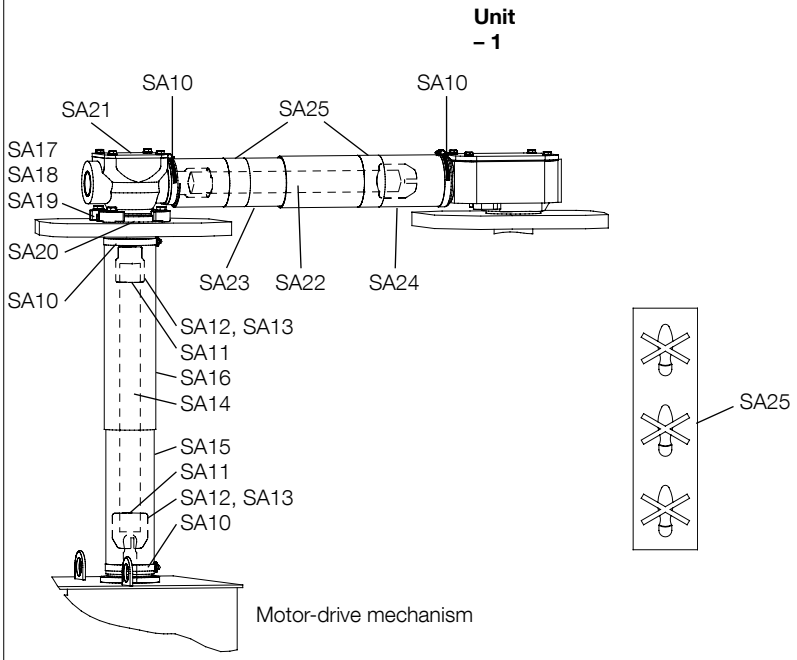

SA 10	Hose clip
SA 11	Coupling halves
SA 12	Allen screw M6
SA 13	Washer
SA 14	Vertical square shaft
SA 15	Vertical protective tube
SA 16	Vertical protective tube
SA 17	Clamp
SA 18	Hex head bolt M10
SA 19	Washer
SA 20	O-ring
SA 21	Bevel gear
SA 22	Horizontal square shaft for unit -1
SA 23	Horizontal protective tube for unit -1
SA 24	Horizontal protective tube for unit -1
SA 25	Information label
SA 30	Horizontal square shaft for unit -2
SA 31	Horizontal protective tube for unit -2
SA 32	Horizontal protective tube for unit -2
SA 33	Cover
SA 34	Horizontal square shaft for unit -3
SA 35	Horizontal protective tube for unit -3
SA 36	Horizontal protective tube for unit -3

Fig. 32. Shaft system.

5.2 Mounting of external drive shafts

The external drive shafts consist of square tubes and should be connected to the spherical shaft ends on the bevel gears and motor-drive mechanism by means of two coupling halves. The square shafts and protective tubes must be cut before mounting.

CAUTION

Before mounting of shafts and couplings, everything must be cleaned and greased for correct function and to avoid corrosion.

Apply a thin layer of grease, GULF-718EP Synthetic Grease or Mobil Grease 28 or SHELL Aero Shell Grease 22 to all spherical shaft ends and unpainted surfaces of the bevel gears.

The multi-hole couplings should be greased.

The inclination of the shaft (the square tube) must not be more than 40 (=70 mm for every 1000 mm shaft length).

The tubes around shafts and couplings are for protection.

The arrangement of the drive shaft system is shown in Fig. 32.

CAUTION

Make sure that all locking devices (on the bevel gear, on the tap-changer and in the motor-drive) are mounted and the tap-changer and the motor-drive are at the same service position.

Check that the motor-drive mechanism is at its exact position according to Fig. 30 or 31. (BUE: The red mark on the brake disk facing the red mark on the brake assembly. BUL: The roller in the middle of the notch in the cam disk). If not, loosen the locking device (see Fig. 50) and adjust it to the exact position. Remount the locking device.

Let the parts of the shaft system that should be removed before transporting the transformer to the site keep their identification numbers according to the packing list to simplify remounting of the shaft system on site.

5.2.1 Mounting of vertical drive shaft

1. Mount the bevel gear SA21 on the transformer, with O-ring SA20, four clamps SA17, hex head bolts M10, SA18 and washers SA19; see Fig. 32.
2. Determine the distance K2 between the spherical shaft ends; see Fig. 33.
3. Cut the vertical square shaft, SA14, to length = K2 minus 6 mm. Remove burrs.
4. Cut the protective tubes SA15 and SA16 to the same length LB2 according to Table 4.

K2 = 200 to 290 mm	K2 = 291 to 600 mm	K2 = greater than 600 mm
$LB2 = \frac{K2+180\ mm}{2}$	$LB2 = \frac{K2+220\ mm}{2}$	$LB2 = \frac{K2+410\ mm}{2}$

Example:

K2 measured at 350 mm. LB2 is then = $\frac{350+220}{2} = \frac{570}{2} = 285$ mm

Table 4. Lengths for LB2.

5. See Fig. 38. Fit two coupling halves, SA11, on one end of the square shaft with six screws SA12 and washers SA13. Push the shaft to the bottom of the fitting in the coupling halves. Tighten the two screws; A first and then the other. Fit the two protective tubes, SA15 and SA16, (the larger diameter at the top) and two hose clips SA10; see Fig. 35.
6. See Fig. 34. Connect the square shaft with the mounted coupling halves to the shaft of the bevel gear. Mount two coupling halves SA11 to the other end of the square shaft and the shaft of the motor-drive mechanism. Push the shaft to the bottom of the fitting in the coupling halves; see Fig. 37. Tighten the screws lightly and check that the shaft can be moved approximately 2 mm in the axial direction (axial play). Check the dimension shown in Fig. 36. Tighten the two screws; A first and then the other.
7. See Fig. 35. Mount the tube with the larger diameter, SA16, to the bevel gear with a hose clip and the other SA15 to the flange on the motor-drive mechanism with a hose clip. Leave about 3 mm of play to the flange ring for water drainage.

The tube with the larger diameter is mounted on the bevel gear.

Tighten the two screws; A and then the other, according to Fig. 38.

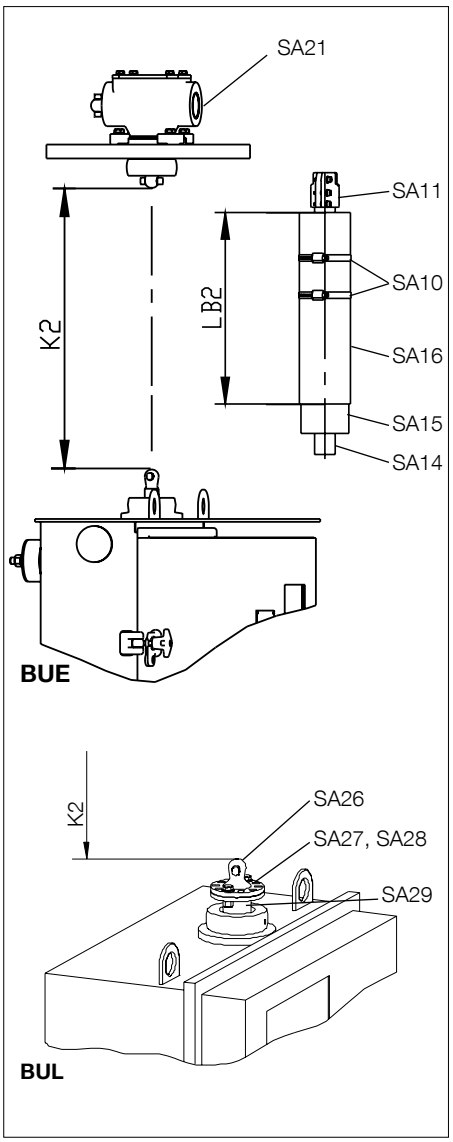

Fig. 33.

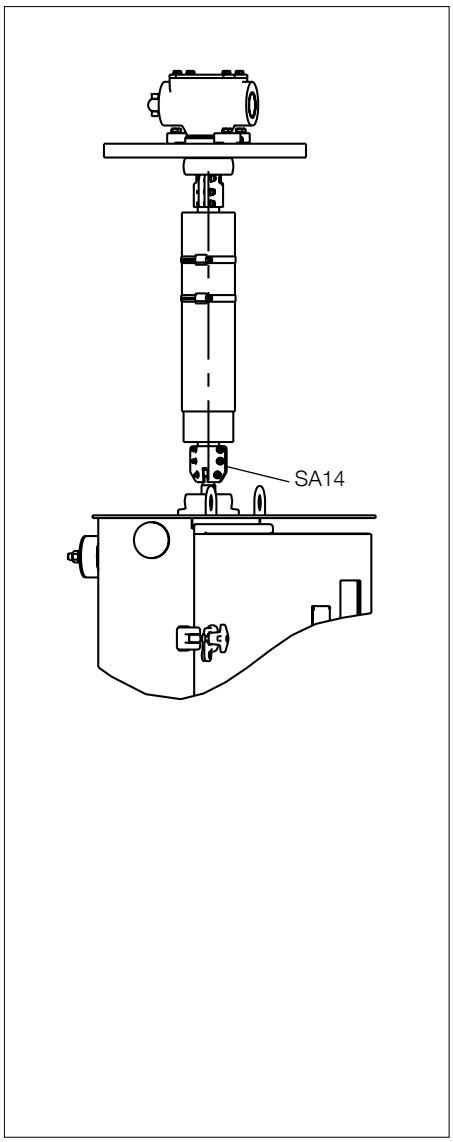

Fig. 34.

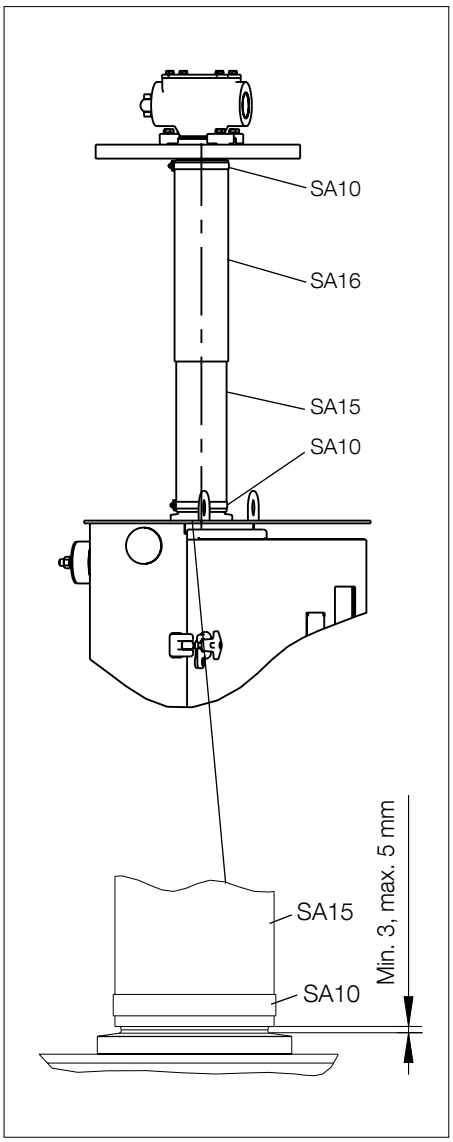

Fig. 35.

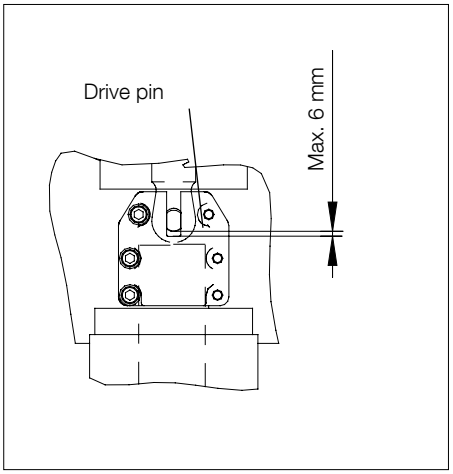

Fig. 36.

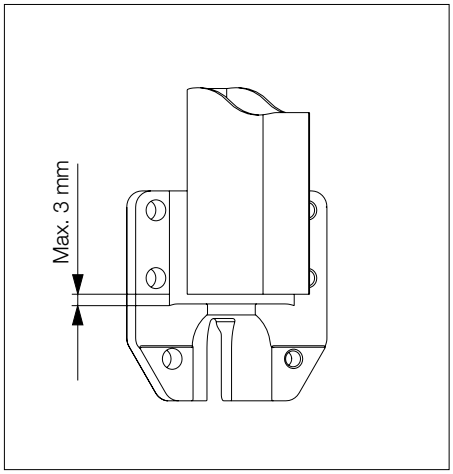

Fig. 37.

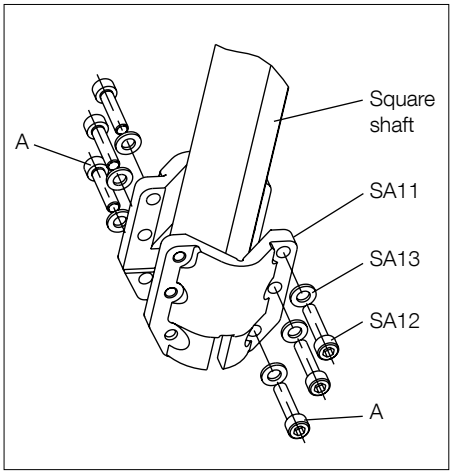

Fig. 38.

5.2.2 Mounting of horizontal drive shaft for one unit

The following applies to the fitting of the drive shaft and protective tube when the tap-changer consists of one unit, UCG.N/VUCG.N or UCG.E/VUCG.E.

1. Determine the distance K1 between the spherical shaft ends; see Fig. 39.
2. Cut the horizontal square shaft SA22 to length = K1 minus 6 mm. Remove burrs.
3. Cut the protective tubes SA23 and SA24 at the non-slotted end to the same length LB1 according to Table 5.

Protective tube SA23 has one slotted end.

K1 = 170 to 290 mm	K1 = 291 to 600 mm	K1 = greater than 600 mm
$LB1 = \frac{K1+200\ mm}{2}$	$LB1 = \frac{K1+250\ mm}{2}$	$LB1 = \frac{K1+500\ mm}{2}$

Example:

K1 measured at 400 mm. LB1 is then = $\frac{400+250}{2} = \frac{650}{2} = 325$ mm

Table 5. Length for LB1.

If K1 is greater than 600 mm, the mounted tubes must overlap by at least 300 mm. Removal and inspection of the couplings should be possible when one of the tubes is pushed into the other.

4. Mount two coupling halves, SA11, on one end of the square shaft with six screws SA12 and washers SA13. Push the shaft to the bottom of the fitting in the coupling halves; see Fig. 37. Tighten the two screws; A first and then the other; see Fig. 38. Mount the two protective tubes, SA23 and SA24, the slotted end of SA23 in the non-overlapping end, and two hose clips SA10; see Fig. 40.
5. Remove the locking device on the bevel gear of the diverter switch housing by loosening the two set screws; see Fig. 42.
6. Connect the square shaft with the mounted coupling halves to the shaft of the bevel gear SA21; see Fig. 44. Mount two coupling halves SA11 to the other end of the square shaft and to the shaft of the bevel gear on the tap-changer. Push the shaft to the bottom of the fitting in the coupling halves; see Fig. 37. Lightly tighten the screws and check that the shaft can be moved approximately 2 mm in the axial direction (axial play). Check the dimension shown in Fig. 36. Tighten the two screws; A first and then the other; see Fig. 38.
7. See Figs. 30 and 31. The motor-drive mechanism and the tap-changer should have the same indicated tap position and be in their **exact** positions. Remove the cover of the gear box on the tap-changer to access the position indicator.
   The motor-drive mechanism and tap-changer are in the same position when the position indicators on both of them show the same position.
   The motor-drive mechanism is at **the exact** position since the steps in Section 5.2 have been carried out.
   The tap-changer is in the **exact** position when the window where the position is read on the bevel gear is exactly facing the red mark in the gear box housing.

If the gear box is not at its exact position, loosen the two screws in the multi-hole coupling on the gear box and find the position of the screws that positions the opening in the brass-toothed wheel closest to the red mark in the gear box housing. The maximum deviation from exact alignment is given in Figs. 30 and 31. Tighten the screws. Remount the cover and the gasket of the gear box on the tap-changer; see Fig. 22.

WARNING

Assembly with the tap-changer and the motor-drive mechanism at different operating positions may cause transformer failure.

WARNING

The bevel gear contains moving gears. Observe caution!

8. Push the two protective tubes onto the bevel gears and clamp them with hose clips, SA10; see Fig. 45.

The slot on the protective tube SA23 should be facing downwards.

Apply the self-adhesive information plates SA25 around the tubes at about the middle of the tube length.
Carefully turn the multi-hole coupling on the gear box until the gear box is at the exact position. Find the two holes matching each other in the multi-hole coupling and refit the two screws.

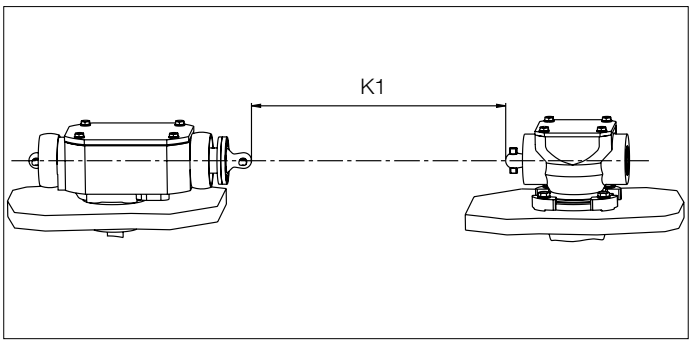

Fig. 39.

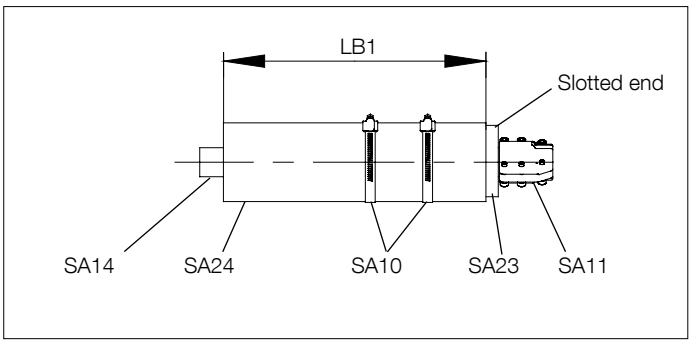

Fig. 40.

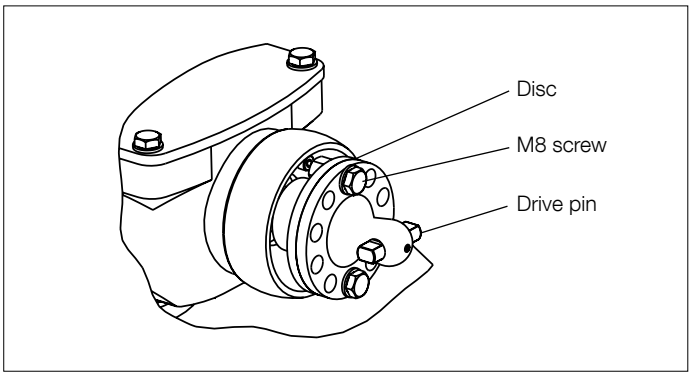

Fig. 41.

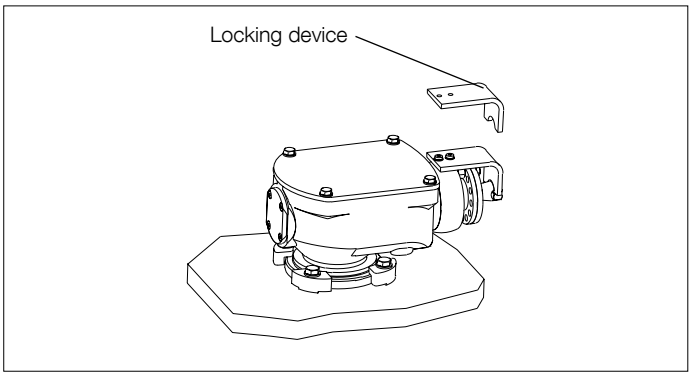

Fig. 42. Locking device, single-unit tap-changer.

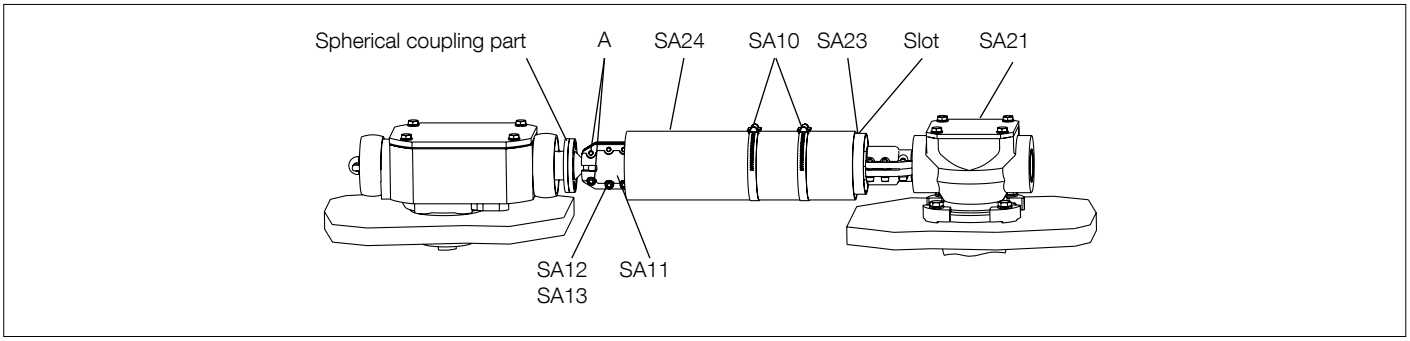

Fig. 43.

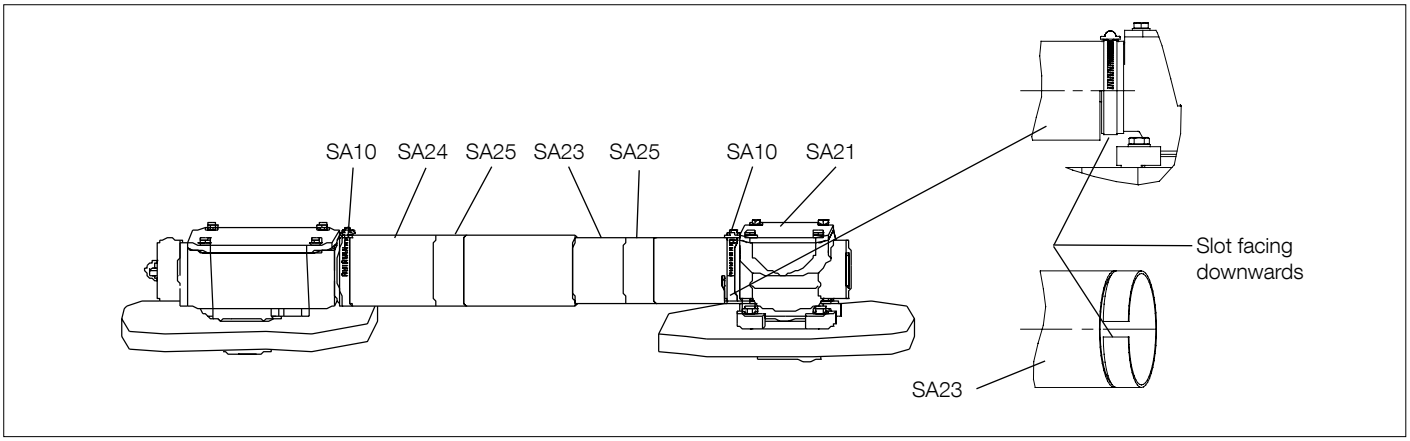

Fig. 44.

5.2.3 Mounting of horizontal drive shaft for two units

The following applies to the fitting of drive shafts and their protective tubes when the tap-changer consists of two phases UCG.B/VUCG.B. The tap-changer unit, which is placed closest to the drive mechanism, is called unit **-1**, and the second unit **-2**; see Fig. 32.

Mount the shaft between the motor-drive mechanism and unit-1 according to Section 5.2.2.

Mount the shaft between unit-1- and unit-2 according to the following instructions:

1. Determine the distance K3 between the spherical shaft ends; see Fig. 45.
2. Cut the horizontal square shaft SA30 to length = K3 minus 6 mm. Remove burrs.
3. Cut the protective tubes SA31 and SA32 at the non-slotted end to the length LB3 = (K3+500 mm)/2; see Fig. 46.
4. Fit two coupling halves, SA11, on one end of the square shaft with six screws SA12 and washers SA13. Push the shaft to the bottom of the fitting in the coupling halves; see Fig. 37. Tighten the two screws; A first and then the other; see Fig. 47. Fit the two protective tubes, SA31 and SA32, the slotted end of SA31 in the non-overlapping end, and two hose clips SA10; see Fig. 46.
5. Remove the locking device on the bevel gear of the diverter switch housing by loosening the two set screws; see Fig. 49.
6. Connect the square shaft with the mounted coupling halves to the shaft of the bevel gear closest to the motor-drive; see Fig. 47. Mount two coupling halves SA11 to the other end of the square shaft and to the shaft of the bevel gear on the tap-changer. Push the shaft to the bottom of the fitting in the coupling halves; see Fig. 37. Lightly tighten the screws and check that the shaft can be moved approximately 2 mm in the axial direction (axial play). Check the dimension shown in Fig. 36. Tighten the two screws; A first and then the other.
   The unit should be at the same service position as the adjacent unit and be at the **exact** position. Compare with the adjacent unit and adjust this unit as described in Section 5.2.3, point 7 if necessary.

WARNING

The bevel gear contains moving gears. Observe caution!

7. Push the two protective tubes on the bevel gears and clamp them with the hose clips SA10; see Fig. 48. Apply the self-adhesive information plates SA25 around the tubes at about the middle of the tube length.

The slot on the protective tubes should be facing downwards.

8. Mount the protective cover SA33. Tighten the two set screws, (taken from the locking device); see Fig. 49.

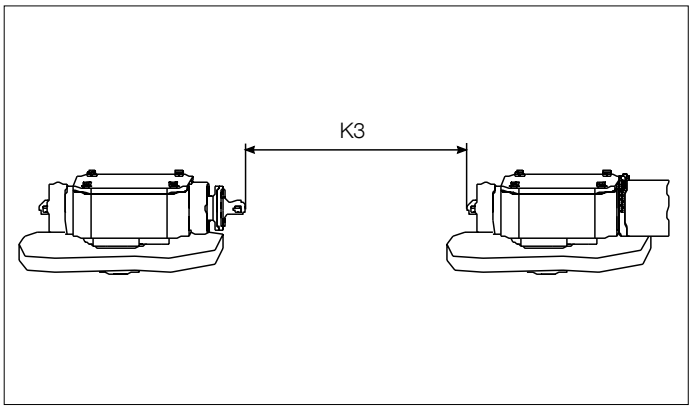

Fig. 45.

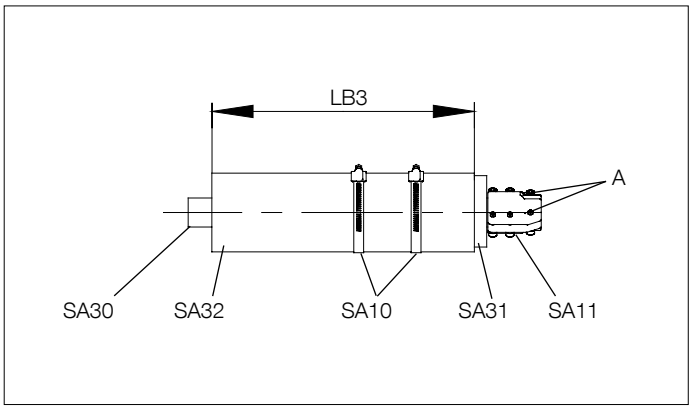

Fig. 46.

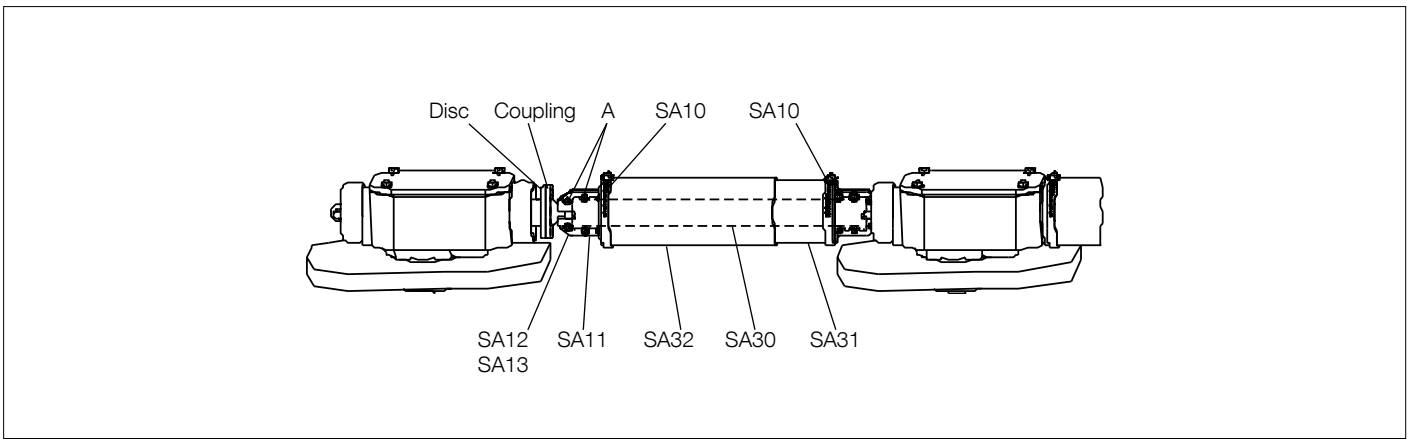

Fig. 47.

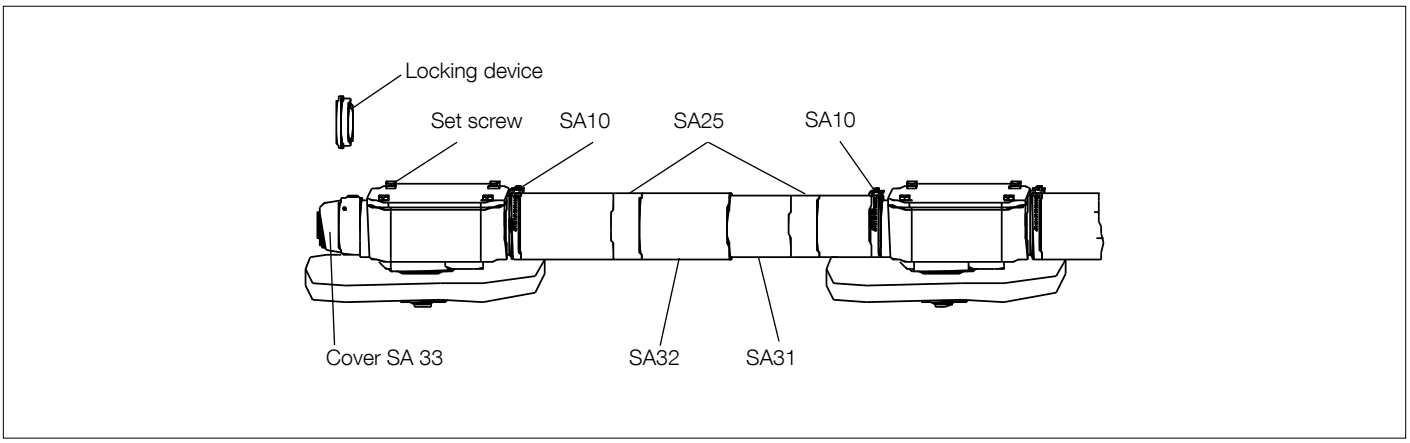

Fig. 48.

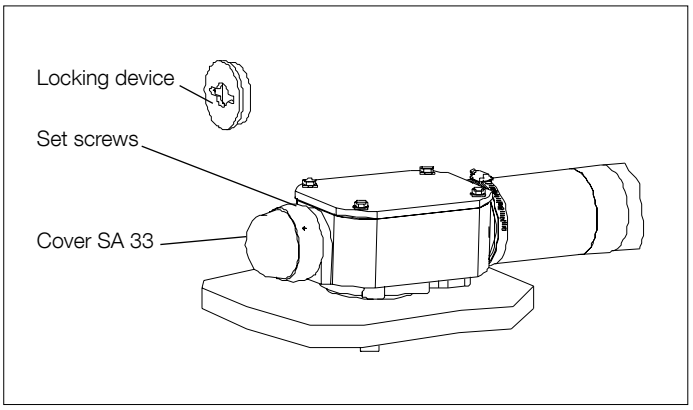

Fig. 49. Locking device and cover, multiple-unit tap-changer.

5.2.4 Mounting of horizontal drive shafts for three units

The following applies to the fitting of drive shafts and their protective tubes when the tap-changer consists of three phases UCG.T/VUCG.T or UCGYD/VUCGYD. The tap-changer unit, which is placed closest to the drive mechanism, is called unit **-1**, the next unit **-2** and the last unit **-3**; see Fig. 32.

1. Mount the drive shaft to the tap-changer unit **-1** according to Section 5.2.2, steps 1–8.
2. Mount the drive shaft between unit **-1** and unit **-2** according to Section 5.2.3, steps 1–8.
3. Mount the drive shaft between unit **-2** and unit **-3** according to Section 5.2.3, steps 1–8.

The shaft here is SA34, the protective tube closest to unit -2 is SA35 and the other protective tube is SA36.

When a support bearing is used, follow the appropriate parts of Section 5.2.3, steps 2–8.

WARNING

The bevel gear contains moving gears. Observe caution!

5.2.5 Before operation

1. Check again that the tap-changer and the motor-drive mechanism are at the same position.
2. Remove the locking device for the motor-drive mechanism; see Fig. 50.

If transformer ratio measurement is to be conducted after drying, this is a suitable stage to carry it out; see Section 3.4.2.

5.3 Supervisory equipment

Accessories and safety devices are described in a separate document, **Accessories and protection devices for on-load tap-changers, 1ZSC000562-AAD**.

5.4 Assembly of accessories

All parts that have been removed for transport are specified on the packing list. The openings on the tap-changer are sealed by a transport cover.

1. Remove the transport covers.
2. Check the O-rings. Make sure that they are pressed into the bottoms of the grooves on the flanges.
3. Assemble all remaining accessories. Tightening torque for the nuts is according to Section 1.8.

5.5 Connection to the oil conservator

If oil filling is carried out under a vacuum without the oil conservator, the steps in this section are performed after oil filling.

Remove the transport cover on the flange for connection to the oil conservator. Make sure that the O-ring is in place on the flange and connect the pipe to the oil conservator. Tighten the nuts; see Fig. 51.

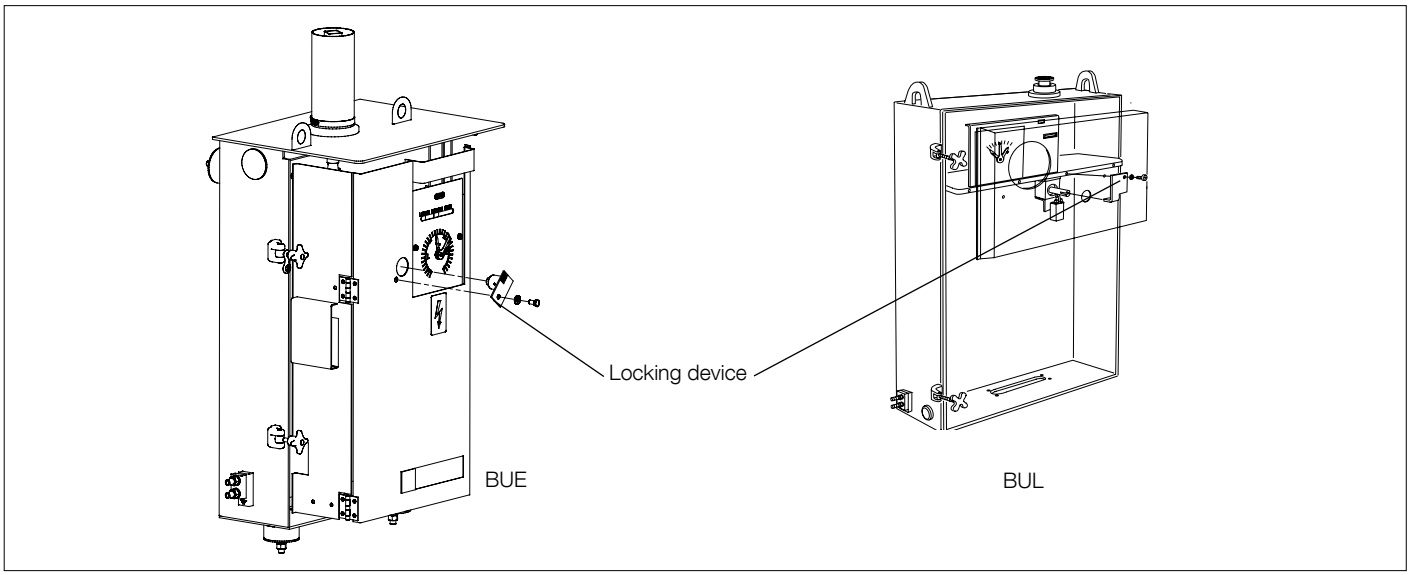

Fig. 50. Locking device for motor-drive mechanism.

5.6. Connection of tube for oil sampling for VUC

Preparation for oil sampling is done at the transformer workshop as part of the tap-changer installation.

- The oil valve (see Fig. 45) should be removed and re-connected at the end of the draining tube at operable ground level.
- The tube, through which oil samples are taken, must be connected to a sample pipe, see Fig. 47. The tube shall be of ½ inch.
- Information regarding the flanges, view A-A and view B-B, see Fig. 46.

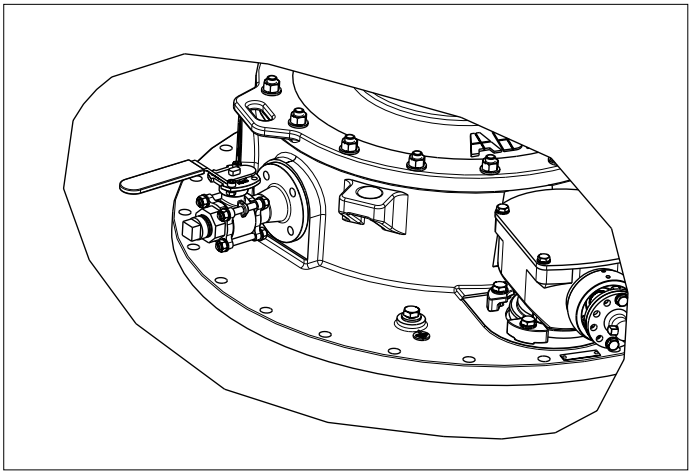

Fig. 51. Oil valve.

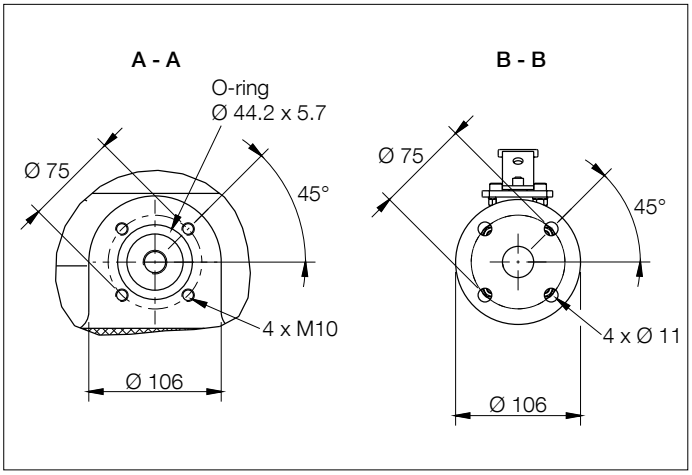

Fig. 52. Sample pipe dimensions.

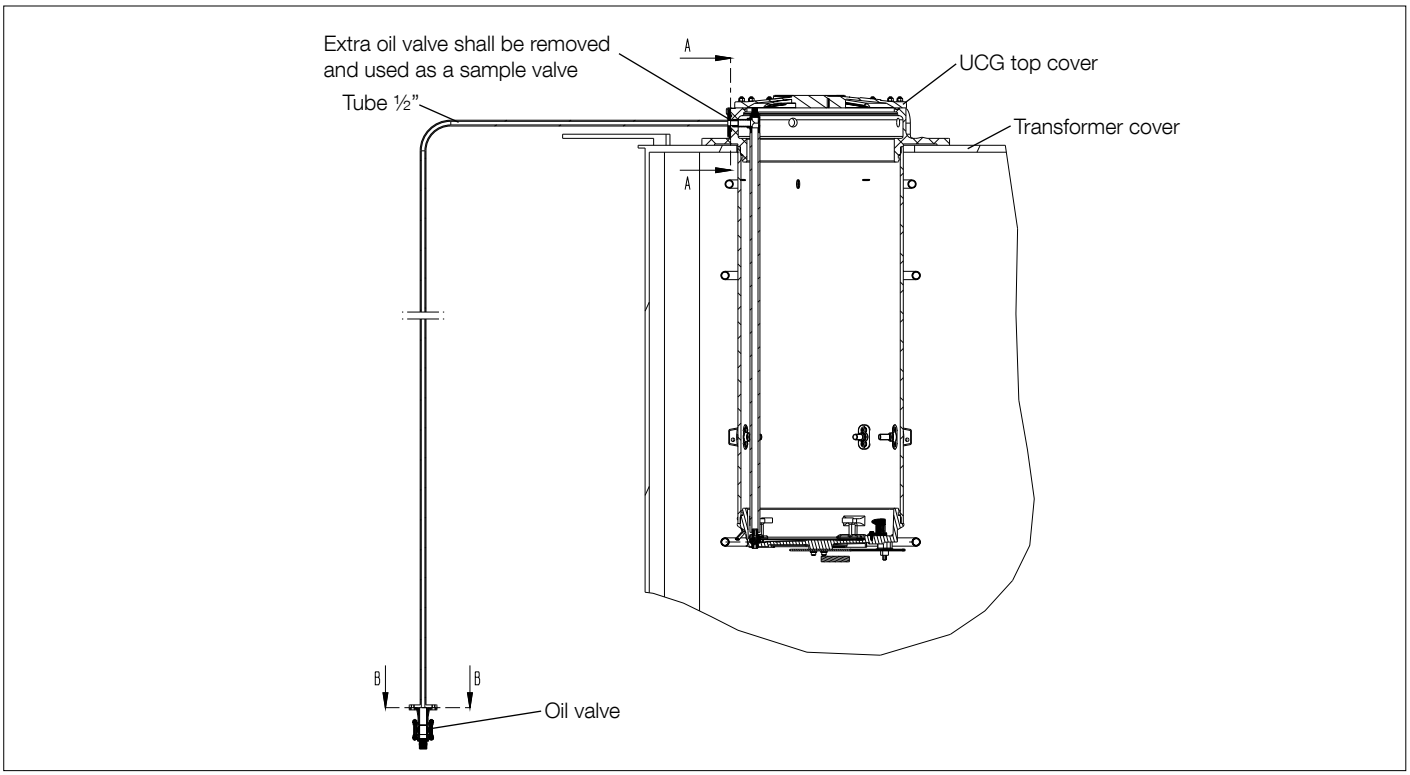

Fig. 53. Extra oil sampling valve. The valve is removed and then refitted at the end of the sampling tube.

6. Oil filling

6.1 Filling methods and restrictions

Oil filling can be carried out at atmospheric pressure or under a vacuum. The wall between the diverter switch housing and the transformer tank is designed to withstand a vacuum on one side and atmospheric pressure on the other. It is not permitted to have a vacuum on one side and the pressure of a high oil column on the other.

CAUTION

The pressure difference between the inside and outside of the tap-changer cylinder may not exceed 100 kPa at any time.

Oil filling may be carried out in different ways depending on what the transformer manufacturer finds convenient as long as the instructions above are followed and the tap-changer is filled with oil to the correct level.

The methods below are recommended, and if they are followed in detail, no pressure limits will be exceeded and the oil levels will be correct.

6.2 Before filling

Upon commissioning, open the cover and check that the diverter switch housing is dry and clean and that the diverter switch is in place. Check that the bottom valve is closed. Follow step 11 in Section 3.2.3.

Tightening torque 40 Nm (see Fig. 18).

6.3 Filling at atmospheric pressure

1. Open the conservator valve, if any.
2. Remove the breathing device on the conservator for the tap-changer.
3. Remove the cover.
4. Pump oil into the diverter switch housing via the oil valve, see Fig. 53 (for connection dimensions, see the dimensional drawing for the tap-changer).

The valve is located at ground level.

5. Refit the cover as per Section 4.3.

When filling more than one unit, fill all of them according to points 3 to 5.

6. Continue to pump in oil until the conservator is filled to its correct level. Also see Section 1.5.
7. Shut the oil valve and disconnect the pump.
8. Refit the breathing device. Make sure that the connection to the breathing device is properly sealed.

WARNING

Do not energize the transformer earlier than three hours after oil filling at atmospheric pressure. This waiting period is needed to allow air bubbles to dissipate.

6.4 Filling under vacuum

Filling under a vacuum is not necessary but may be carried out with the conservator. After filling under a vacuum, no standing time is needed. The methods below ensure that no permitted pressure differences are exceeded.

For vacuum filling without the conservator connected, contact the manufacturer for advice.

6.4.1 Oil conservator filled under vacuum

1. Establish a connection between the oil conservator for the transformer and the oil conservator for the tap-changer.
2. Open the valve between all tap-changer units and the conservator and close the oil valve.
3. Put the transformer under vacuum. (The tap-changer is put under vacuum automatically.)
4. Let oil in through the oil valve of the tap-changer. (For connection dimensions, see the dimensional drawing for the tap-changer.)
5. When the needle of the oil level indicator in the oil conservator starts to move, close the oil valves on all units. Open one at a time and close each when the needle in the oil level indicator starts to move. Fill the conservator to the right level before closing the oil valve for the last unit. (This is done to make sure that all units are properly filled. Differences in flow rates might otherwise cause some of the units to not completely fill.)
6. When atmospheric pressure is restored in the transformer, remove the connection between the two conservators and connect the breathing device to the oil conservator for the tap-changer. Make sure that the connection to the breathing device is properly sealed.

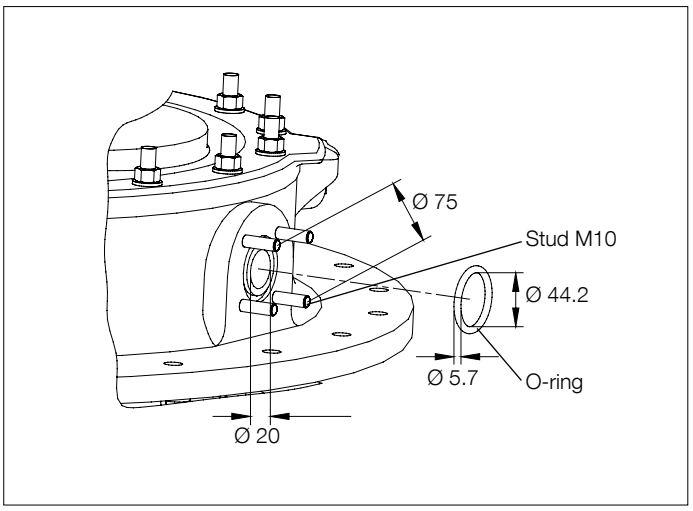

Fig. 54. Assembly O-ring.

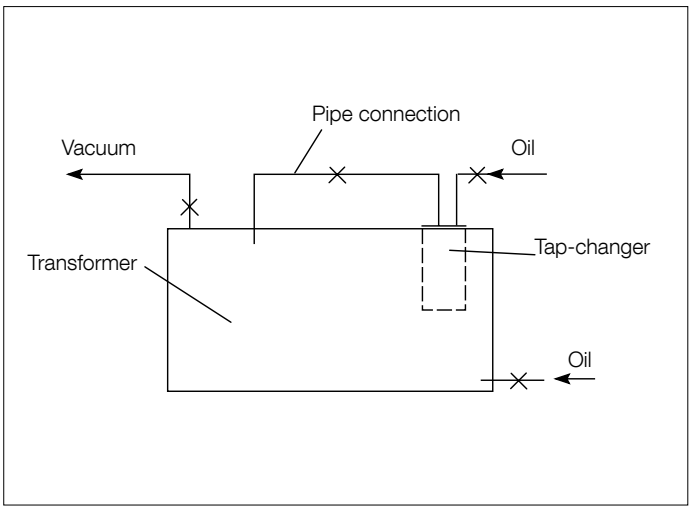

Fig. 55. Oil filling under vacuum.

7. Electrical connection and testing

7.1 General

Before the transformer is energized, tests must be carried out to ensure that all mechanical and electrical connections are correct, and to check the proper function of the motor-drive mechanism and the tap-changer.

When testing the transformer, the tap-changer can be operated either by the hand crank or electrically. When operating electrically, the motor-drive mechanism is connected according to Section 7.2.

WARNING

If 2 kV insulation testing is to be performed, some equipment must be disconnected in order to avoid damage. Examples of equipment to be disconnected are the measuring transducer, pressure relay, diodes (for example, N4) and temperature relays.

7.2 Connecting and testing the motor-drive mechanism and the tap-changer

Connect the ground connection from the transformer to the ground terminal on the tap-changer flange.

Connect the ground connector from the transformer to the ground terminal on the motor-drive mechanism.

Connect the motor supply and the control supply to the correct terminals on the motor-drive mechanism as shown by the circuit diagram supplied with the tap-changer.

Operate the motor-drive mechanism by means of the hand crank to a position at the middle of the range but not in a through-position (= a position with a letter in).

Turn the control selector switch to position LOCAL. Now send a pulse for a RAISE operation.

If the phase sequence is wrong, (three-phase supply), the motor-drive mechanism will start in the LOWER direction.

The motor-drive mechanism will stop when it has made approximately half of the complete operation and will operate back and forth without the tap-changer changing position until the control selector switch is turned to position 0.

If the phase sequence is wrong, reverse two of the motor supply cables to attain the correct sequence.

WARNING

Dangerous voltage!

For BUE: Run the motor-drive mechanism and check again that the red mark on the brake disk stops within the tolerance of ± 25° from the exact position; see Fig. 30.

For BUL: Run the motor-drive mechanism and check that the center of the notch in the cam disk stops within ±2 mm from the center of the roller on the brake arm; see Fig. 31.

For adjustment of the motor-drive mechanisms, see **Maintenance guide 1ZSC000498-ABH**.

Operate the drive mechanism electrically between the end-positions. Check the end-stops. When attempting to operate electrically beyond the end-position, the motor should not be started. Check the mechanical end-stop by attempting to hand crank it beyond the end-position. After a couple of turns on the hand crank, it should be mechanically stopped. Hand crank back to the end-position (where the indicator flag is positioned at the middle for BUE and when the indicator flag is white for BUL). Operate the tap-changer electrically to the other end-position and repeat the test procedure above.

WARNING

The transformer must never be energized when the end-stop is inoperable.

7.3 Electrical tests on the transformer

Acceptance tests on the transformer or commissioning can now be performed.

7.4 After energizing

WARNING

Before any work is carried out on the tap-changer: Make sure that the transformer is disconnected and grounding is properly performed. Obtain a signed certificate from the engineer in charge.

8. Transport

8.1 Dismantling before transport

The tap-changer is usually transported without accessories (pressure relay, motor-drive mechanism, bevel gear and drive shafts) to prevent damage to these parts. To make sure that everything is set up properly on site with a minimum amount of work, it is important to put the tap-changer at the position and operated from the position given in the single-phase diagram delivered with the unit, and to fit locking devices properly during dismantling at the transformer factory. Removal of the motor-drive mechanism and drive shafts is performed in the opposite order of assembly.

8.1.1 Dismantling preparations

Before dismantling, mark the parts to facilitate identification.

Check the position of the motor-drive mechanism according to Fig. 30 (BUE) or Fig. 31 (BUL). Use the hand crank to adjust it to its exact position. Install the locking device on the motor-drive mechanism; see Fig. 50.

The arrangement of the drive shaft system is shown in Fig. 32.

8.1.2 Removal of the vertical drive shaft

1. Loosen the hose clips holding the protective tubes to the bevel gear and motor-drive mechanism. Push one of the protective tubes into the other. Remove the screws holding the bevel gear SA21. Detach the bevel gear by carefully lifting it off the shaft while holding the vertical drive shaft. Detach the vertical shaft including the protective tubes by lifting it off the coupling of the motor-drive mechanism. Mark the parts.
2. Pack screws, clamps, protective tubes, shafts, hose clips, protective cover, coupling halves, bevel gear and seals for transportation to the site.

8.1.3 Removal of horizontal drive shaft for one unit

1. Lock the bevel gear with the locking device, and two set screws see Fig. 42.
2. Loosen the hose clips holding the protective tubes to the bevel gears. Push one of the protective tubes into the other. Loosen the screws holding the coupling halves at one end of the shaft and detach them. Detach the horizontal shaft. Mark the parts.
3. Pack screws, clamps, protective tubes, shafts, hose clips, protective cover, coupling halves, bevel gear and seals for transportation to the site.

8.1.4 Removal of horizontal drive shafts for two units

1. Detach the protective cover SA33 on the bevel gear of unit -2, and lock the bevel gear with the locking device marked -2, and two set screws; see Fig. 42.
2. Loosen the hose clips holding the protective tubes to the bevel gears for units -1 and -2. Push one of the protective tubes into the other. Loosen the screws holding the coupling halves at one end of the shaft and detach them. Detach the horizontal shaft between units -1 and -2.
3. Lock the bevel gear for unit -1 with the locking device marked -1, and two set screws; see Fig. 49.
4. Loosen the hose clips holding the protective tubes to the bevel gear SA21 and the bevel gear of tap-changer unit -1. Push one of the protective tubes into the other. Loosen the screws holding the coupling halves at one end of the shaft and detach them. Detach the horizontal shaft between unit -1 and bevel gear SA21. Mark the parts.
5. Pack screws, clamps, protective tubes, shafts, hose clips, protective cover, coupling halves, bevel gear and seals for transportation to the site.

8.1.5 Removal of horizontal drive shafts for three units

1. Detach the protective cover SA33 on the bevel gear for unit -3, and lock the bevel gear with the locking device and set screws marked -3; see Fig. 42.
2. Loosen the hose clips holding the protective tubes to the bevel gears of unit -2 and unit -3. Push one of the protective tubes into the other. Loosen the screws holding the coupling halves at one end of the shaft and remove them. Detach the horizontal shaft between units -2 and -3.
3. Lock the bevel gear for unit -2 with the locking device marked -2 and two set screws.
4. Loosen the hose clips holding the protective tubes to the bevel gears of units -1 and -2. Push one of the protective tubes into the other. Loosen the screws holding the coupling halves at one end of the shaft and remove them. Detach the horizontal shaft between units -2 and -1.
5. Lock the bevel gear for unit -1 with the locking device marked -1 and set screws; see Fig. 49.
6. Loosen the hose clips holding the protective tubes to the bevel gear SA21 and the bevel gear for tap-changer unit -1. Push one of the protective tubes into the other. Loosen the screws holding the coupling halves at one end of the shaft and remove them. Detach the horizontal shaft between unit -1 and bevel gear SA21. Mark the parts.
7. Pack screws, clamps, protective tubes, shafts, hose clips, protective cover, coupling halves, bevel gear and seals for transportation to the site.

8.1.6 Accessories

If the pressure relay is to be removed, see the assortment guide, **1ZSC000562-AAD**.

If other accessories are to be removed for transport reasons, pack them in the packages they were delivered in and refit the transport covers. Fit the O-rings and tighten the nuts.

8.2 Oil level during transport

The following adjustments of the oil level should be carried out when the tap-changer is to be transported.

CAUTION

Take care to avoid intake of moist air when oil is drained. If the ambient air is moist, let incoming air pass through a dehydrating breather with a slow air flow to obtain proper dehydration.

8.2.1 Transformer filled with oil

When the transformer is transported filled with oil, the tap-changer should also be transported filled with oil.

8.2.1.1 Conservator mounted

The diverter switch housing should be filled to the normal operating level, and the valve for the conservator should be open.

8.2.1.2 Conservator unmounted

The oil level of the diverter switch housing should be lowered to 150 mm below the upper edge of the housing.

When the conservator is removed, take off the cover of the diverter switch housing and drain the oil with a pump to 150 mm below the upper edge of the housing. Refit the cover. Turn the cover so that the guide pin in the housing is facing the guide hole in the cover. Make sure the gasket is properly positioned. Seal all flange connections by fitting gaskets and covers. Close all valves.

8.2.2 Transformer drained

When the transformer is transported without oil, the tap-changer should also be transported without oil.

8.2.2.1 Conservator mounted

Drain the oil from the diverter switch housing by means of a pump connected to the oil valve. Let the tap-changer maintain contact with the ambient air through the breathing device on the conservator.

8.2.2.2 Conservator unmounted

Drain the oil as described in Section 8.2.2.1. Now remove the conservator connection. Seal the diverter switch housing against ambient air by fitting covers with gaskets and closing all valves.

9. Commissioning

This chapter describes tasks to be carried out on the tap-changer when the transformer is being installed and tested on site.

CAUTION

The motor-drive mechanism must be protected against condensation.

Energize the heater when power is available. When not, put drying agent inside the motor-drive cabinet and seal the vents.

Fig. 1 shows the arrangement of the tap-changer, motor-drive mechanism and drive shafts.

The pressure relay is usually delivered in a separate package and installed upon commissioning. Depending on the transport requirements, the transformer may be delivered with or without the motor-drive mechanism and drive shaft system attached. The tap-changer may be delivered filled with oil or without oil. Use the relevant parts of this manual to perform commissioning.

For information about tools, materials and oil required, see the relevant parts of Chapter 1.

9.1 Connection to the oil conservator

Follow the appropriate parts of the instructions in Section 5.5.

Connect the cables to the low level alarm contact on the oil level indicator.

9.2 Mounting the motor-drive mechanism and the drive shafts

The motor-drive mechanism and drive-shaft system should have been assembled and disassembled in the transformer factory according to the instructions in this guide. Locking devices should have been installed when it was disassembled. If all locking devices are in place according to the transport sections in this guide, there should be no need for adjustments.

If necessary, Sections 5.1 and 5.2 provide complete information for fitting and adjusting of the shaft system. The arrangement of the drive shaft system is shown in Fig. 32.

Check all fittings and alignments, even if the shaft system has been set up in the transformer factory.

The identification numbers on critical parts from the packing list are specified in the following instructions; see Sections 5.1 and 5.2.

9.2.1 Mounting of the motor-drive mechanism

See Figs. 30 and 31. Proceed as follows:

1. Mount the motor-drive mechanism on the transformer. The mounting holes on the transformer should be level within 1 mm. If adjustment is needed, shims should be used.
2. Install the bevel gear, SA21, on the edge of the transformer cover.
3. Check that the position indicator on the motor-drive mechanism shows the same position as the indicator inside the bevel gear of the tap-changer.
4. Remove the drying agent inside the cabinet.

WARNING

Do not energize the transformer before the tap-changer and the motor-drive mechanism are correctly assembled.

9.2.2 Mounting of the external drive shafts

The external drive shafts consist of square tubes and should be connected to the spherical shaft ends on the bevel gears and motor-drive mechanism by means of two coupling halves.

CAUTION

Before mounting shafts and couplings, everything must be cleaned and greased for correct function and to avoid corrosion.

Apply a thin layer of grease, GULF 718EP Synthetic Grease or Mobil Grease 28 or SHELL Aero Shell Grease 22 to all spherical shaft ends and unpainted surfaces on the bevel gears.

The multi-hole coupling should be greased.

The tubes around shafts and couplings are for protection.

CAUTION

Make sure that all locking devices (on the bevel gear, on the tap-changer and in the motor drive) are mounted and the tap-changer and the motor-drive are in the same service position.

Check that the motor-drive mechanism is at its exact position according to Figs. 30 or 31. (BUE: The red mark on the brake disk facing the red mark on the brake assembly, BUL: The roller at the middle of the notch in the cam disk.) If not, loosen the locking device and adjust it to its exact position. See Fig. 50. Refit the locking device.

9.2.3 Mounting of the vertical drive shaft

1. Mount the bevel gear SA21 on the transformer with an O-ring, SA20, clamps SA17 screws and washers; see Figs. 56 and 57.
2. Fit the square shaft SA14 with protective tubes SA15 and SA16 and hose clips according to Fig. 34. Connect the square shaft with the mounted coupling halves to the motor-drive. Mount two coupling halves SA11 to the other end of the square shaft and the shaft of the bevel gear; see Fig 34. Push the shaft to the bottom of the fitting in the coupling halves; see Fig. 37. Tighten the screws lightly and check that the shaft can be moved approximately 2 mm in the axial direction (axial play). Check the dimension shown in Fig. 36. Tighten the two screws; A first and then the other; see Fig. 38.
3. Mount the protective tube with the larger diameter, SA16 to the bevel gear with a hose clip, and the other tube SA15 to the flange of the motor-drive mechanism; see Fig. 35. Leave about 3 mm of play to the flange ring for water drainage.

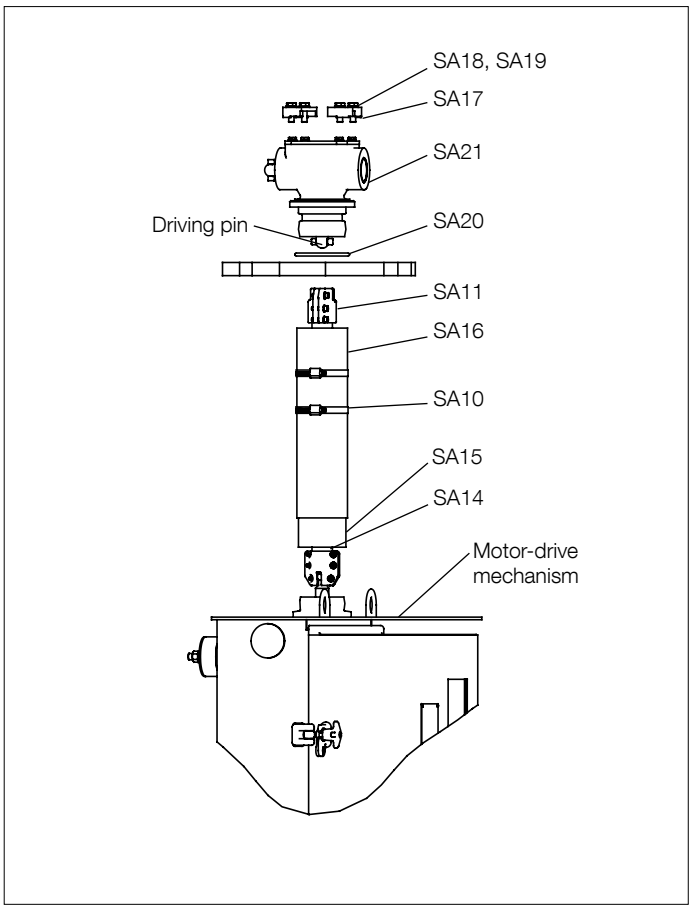

Fig. 56.

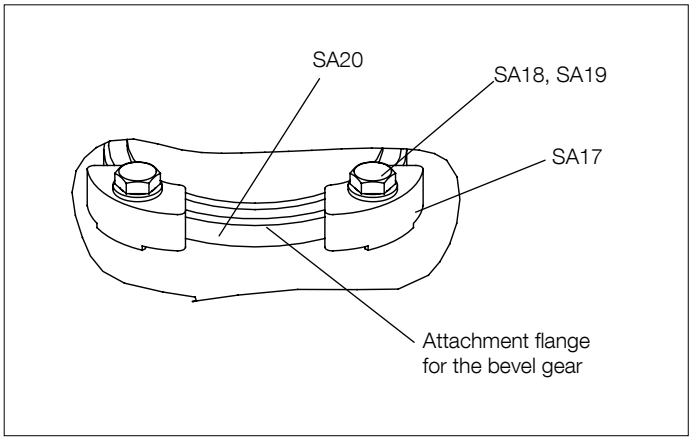

Fig. 57. Bevel gear assembly.

9.2.4 Mounting of horizontal drive shaft for one unit

1. Fit the square shaft SA22, protective tubes SA23 and SA24 and hose clips according to Fig. 40.
2. Connect the square shaft with the mounted coupling halves to the shaft of the bevel gear; see Fig. 58. Mount two coupling halves SA11 to the other end of the square shaft and the shaft of the other bevel gear. Push the shaft to the bottom of the fitting in the coupling halves; see Fig. 37. Tighten the screws lightly and check that the shaft can be moved approximately 2 mm in the axial direction (axial play).
   Check the dimension shown in Fig. 36. Tighten the two screws; A first and then the other; see Fig. 38.
3. See Figs. 30 and 31. The motor-drive mechanism and the tap-changer should have the same indicated tap position and be at their **exact** positions.
   The motor-drive mechanism and the tap-changer are at the same position when the position indicators for both of them show the same position.
   The motor-drive mechanism is at the **exact** position since the steps in Section 9.2.2 have been carried out.
   The tap-changer is at the **exact** position when the window where the position is read on the bevel gear is exactly facing the red mark in the gear box housing.

   If the gear box is not at its **exact** position, carry out point 5 and loosen the two screws in the multi-hole coupling on the gear box and find the position of the screws that positions the opening in the brass-toothed wheel closest to the red mark in the gear box housing. The maximum deviation from exact alignment is given in Fig. 30. Tighten the screws.

WARNING

Assembly with the tap-changer and the motor-drive mechanism in different operating positions may cause transformer failure.

4. Push the two protective tubes onto the bevel gears and clamp them with hose clips SA10; see Fig. 48.

The slot of the protective tube SA23 should be facing downwards.

The self-adhesive information plates SA25 are at about the middle of the tube length.

Do not remove the locking device before one end of the shaft of the bevel gear is connected to the drive shaft.

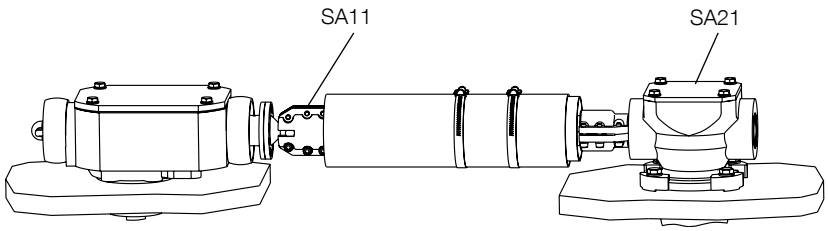

Fig. 58.

9.2.5 Mounting of horizontal drive shafts for two units

Mount the shaft between the motor-drive mechanism and unit-1 according to Section 9.2.4.

Mount the shaft between unit-1 and unit-2, as follows:

1. Loosen the set screws for the locking device of the bevel gear on the top of the tap-changer; see Fig. 48. Remove the locking device.
2. Mount the cover SA33 and tighten the set screws (from the locking device).
3. Fit the square shaft SA30, protective tubes SA31 and SA32 and hose clips according to Fig. 47.
4. Connect the square shaft with the mounted coupling halves to the shaft of the bevel gear; see Fig. 47. Mount two coupling halves SA11 to the other end of the square shaft and the shaft of the other bevel gear. Push the shaft to the bottom of the fitting in the coupling halves; see Fig. 37. Tighten the screws lightly and check that the shaft can be moved approximately 2 mm in the axial direction (axial play). Check the dimension shown in Fig. 36. Tighten the two screws; A first and then the other; see Fig. 38.

If the exact position of the closest unit has been adjusted, the locking device might have to be removed (step 6) before step 3 can be carried out.

5. See Figs. 30 and 31. The motor-drive mechanism and the tap-changer should have the same indicated tap position and be at their **exact** positions.

   The motor-drive mechanism and the tap-changer are at the same position when the position indicators for both of them show the same position.
   The motor-drive mechanism is at the **exact** position since the steps in Section 9.2.2 have been carried out.
   The tap-changer is at the **exact** position when the window where the position is read on the bevel gear is exactly facing the red mark in the gear box housing.
   If the gear box of this unit is not at its **exact** position, carry out point 6 and loosen the two screws in the multi-hole coupling on the gear box and find the position of the screws that positions the opening in the brass-toothed wheel closest to the red mark in the gear box housing.
   The maximum deviation from exact alignment is given in Fig. 30. Tighten the screws.

WARNING

Assembly with the tap-changer and the motor-drive mechanism in different operating positions may cause transformer failure.

6. Push the two protective tubes onto the bevel gears and clamp them with hose clips SA10; see Fig. 48. Apply the self-adhesive information plates SA25 around the tubes at about the middle of the tube length.
7. Loosen the two set screws (see Fig. 49) and remove the locking device.
8. Mount the cover SA33. Tighten the two set screws (see Fig. 44) taken from the locking device.

9.2.6 Mounting of horizontal drive shafts for three units

The following applies to the fitting of drive shafts and their protective tubes when the on-load tap-changer consists of three insulated units UCG.T/VUCG.T or UCGYD/VUCGYD. The on-load tap-changer unit, which is placed closest to the drive mechanism, is called unit **-1**, the second unit **-2** and the last unit **-3**; see Fig. 41.

1. Mount the drive shaft on the on-load tap-changer unit **-1** according to Section 9.2.5, steps 1–5. Remove the set screws according to Fig. 49.
2. Mount the drive shaft between unit **-1** and unit **-2** according to Section 9.2.5, steps 1-6. Remove the set screws according to Fig. 49.
3. Mount the drive shaft between unit **-2** and unit **-3** according to Section 9.2.5, steps 2-7.

The shaft here is SA34, the protective tube closest to unit -2 is SA35 and the other protective tube is SA36.

Do not remove the locking device before one end of the shaft of the bevel gear is connected to the drive shaft.

In cases where a support bearing is used, follow the appropriate parts of Section 9.2.5, steps 2-5.

9.2.7 Before operation

1. Check again that the on-load tap-changer and the motor-drive mechanism are at the same operating position; see Section 5.1.
2. Remove the locking device for the motor-drive mechanism; see Fig. 50.

WARNING

Assembly with the on-load tap-changer and the motor-drive mechanism at different operating positions may cause transformer failure.

The door of the motor-drive mechanism can be locked with a padlock (not included in the delivery).

Do not remove the locking device before one end of the shaft of the bevel gear is connected to the drive shaft.

9.3 Supervisory equipment

Accessories and safety devices are described in **Accessories and protection devices for on-load tap-changers, 1ZSC000562-AAD**.

9.4 Accessories

Refit all other accessories, if any, that have been removed for transport. Follow the appropriate parts of Section 5.4.

9.5 Oil filling

Follow the appropriate parts of Chapter 6.

9.6 Electrical connection and testing

Carry out all wiring work and appropriate tests according to Chapter 7. Remove the drying agent inside the cabinet of the motor-drive mechanism.

9.6.1 Motor protection

The function of the protective motor switch is checked. For three-phase AC motors, one of the phase fuses is removed and the function time of the protective motor switch is checked by a RAISE or LOWER operation. The protective motor switch should release within 60 seconds at a current setting equal to the rated current of the motor at the actual voltage.

WARNING

The motor power voltage is dangerous.

CAUTION

If the protective motor switch has not released within 60 seconds, disconnect the power and check the settings against the rating plate of the motor. Adjust if necessary and check again when the motor has cooled down.

Protective motor switches for DC motors and for single-phase AC motors are not tested.

9.6.2 Disk brake

For BUE: Run the motor-drive mechanism and check again that the red mark on the brake disk stops within the tolerance of ± 25° from the exact position; see Fig. 30.

For BUL: Run the motor-drive mechanism and check that the center of the notch in the cam disk stops within ±2 mm from the center of the roller on the brake arm; see Fig. 31.

For adjustment of the motor-drive mechanisms, see the **maintenance guide: 1ZSE 5492-124 for UCG** or **1ZSC000498-ABD for VUCG**.

9.6.3 Counter

Check that the counter is functioning for RAISE and LOWER operations.

9.6.4 Position transmitter and other position switches

Check the function of the position transmitter and other position switches.

9.6.5 Light

Check that the light is switched on when the door is opened and goes out when the door is closed.

9.6.6 Heater

Switch off all power sources and check with a finger that the heater has warmed up during earlier tests. Switch on the power afterwards.

9.7 Putting into operation

Set the LOCAL/REMOTE switch to REMOTE. Reset the drag hands. Make sure that no tools or foreign objects are left in the motor-drive cabinet or on the transformer cover. Close the door to the motor-drive.

Contact us

ABB AB
Components
SE-771 80 Ludvika, Sweden
Phone: +46 240 78 20 00
Fax: +46 240 121 57
E-Mail: sales@se.abb.com

www.abb.com/electricalcomponents

© Copyright 2015 ABB, All rights reserved. 1ZSC000562-AAY en, Rev. 1, 2015-10-30

Power and productivity
for a better world™