Relion® 650 series

Breaker protection REQ650
Product Guide

Power and productivity
for a better world™

Contents

1. 650 series overview

The 650 series IEDs provide both customized and configured solutions. With the customized IEDs you have the freedom to completely adapt the functionality according to your needs.

The 650 series IEDs provide optimum 'off-the-shelf', ready-to-use solutions. It is configured with complete protection functionality and default parameters to meet the needs of a wide range of applications for generation, transmission and sub-transmission grids.

The 650 series IEDs include:

- Customized versions providing the possibility to adapt the functionality to the application needs.
- Configured solutions are completely ready to use solutions optimized for a wide range of applications for generation, transmission and sub-transmission grids.
- Support for user-defined names in the local language for signal and function engineering.
- Minimized parameter settings based on default values and ABB's new global base value concept. You only need to set those parameters specific to your own application, such as the line data.
- GOOSE messaging for horizontal communication.
- Extended HMI functionality with 15 dynamic three-color-indication LEDs per page, on up to three pages, and configurable push-button shortcuts for different actions.
- Programmable LED text-based labels.
- Settable 1A/5A -rated current inputs.

2. Application

Breaker protection REQ650 IED provides a standalone solution for applications, where the functions related to the breaker is not preferred or suitable to be integrated into the main protection function that is, the line distance protection for a line. The advanced automatic reclosing, synchronizing, synchrocheck and energizing check functions of REQ650 provides an optimized stand alone product. This IED also enables well-structured and reliable protection and control systems especially in systems where complete bay control functionality including interlocking is not required.

REQ650 provides backup to the main protection with redundant protection and control functions.

Three pre-configured packages have been defined for the following applications:

- A01: Backup protection functions in a single busbar single breaker bay with three-phase trip.
- A11: Backup protection functions in a single busbar single breaker bay with single-phase trip.
- B11: Backup protection functions in a double busbar single breaker bay with single-phase trip.

The backup protection is mainly based on current and voltage functions. In line protection applications, autoreclosing with or without synchrocheck is available.

The REQ650 IED is delivered pre-configured and ready for use in the power system. Analogue inputs and binary inputs/outputs circuits are pre-defined.

The pre-configured IED can be modified and adapted to suit specific applications with the graphical configuration tool ACT inside the PCM600 tool, For example, using the glue logic and adjusting the parameter settings.

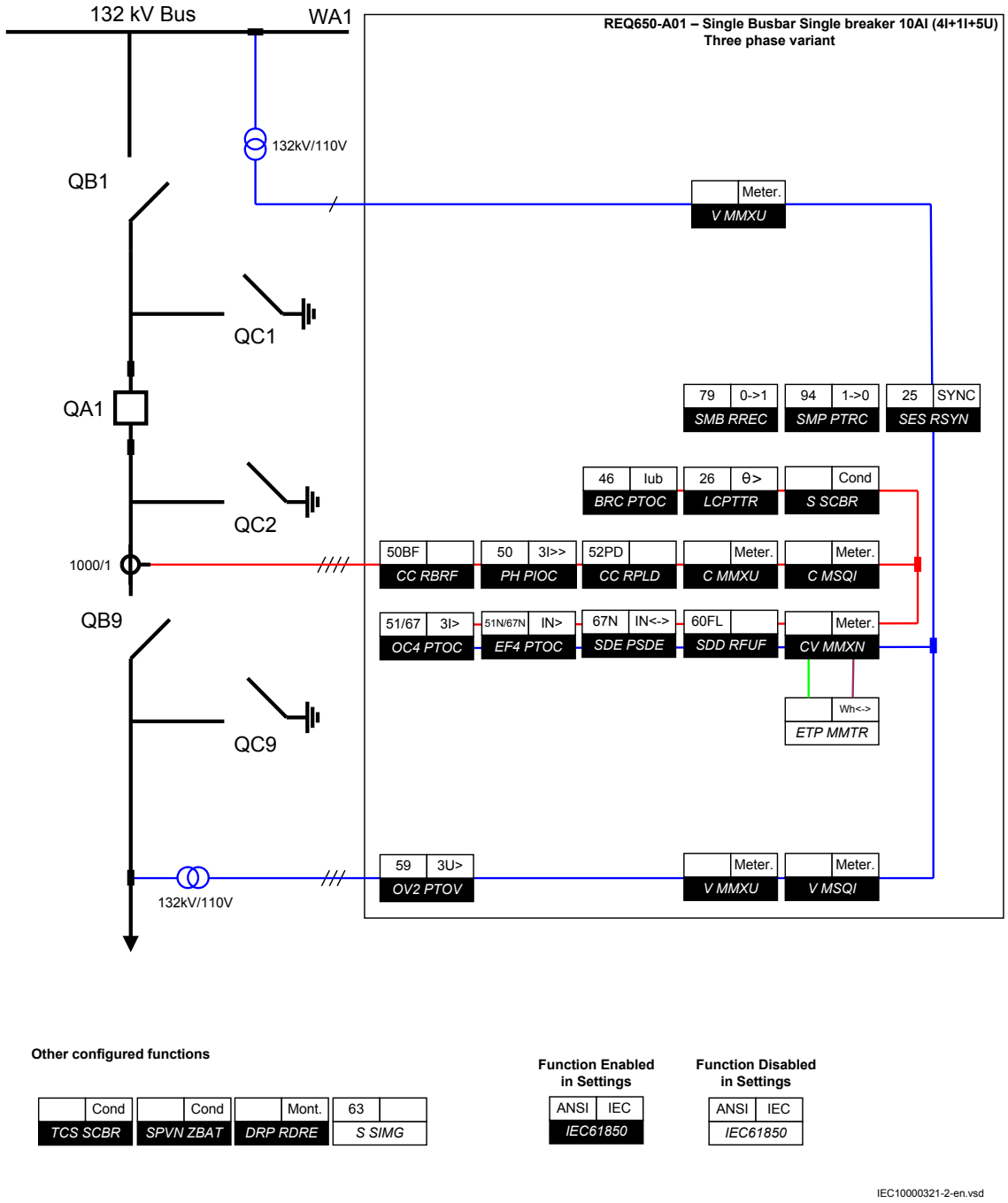

Figure 1. Typical application example of the REQ650 A01 used as backup protection in a single busbar single breaker arrangement when three-phase trip is required

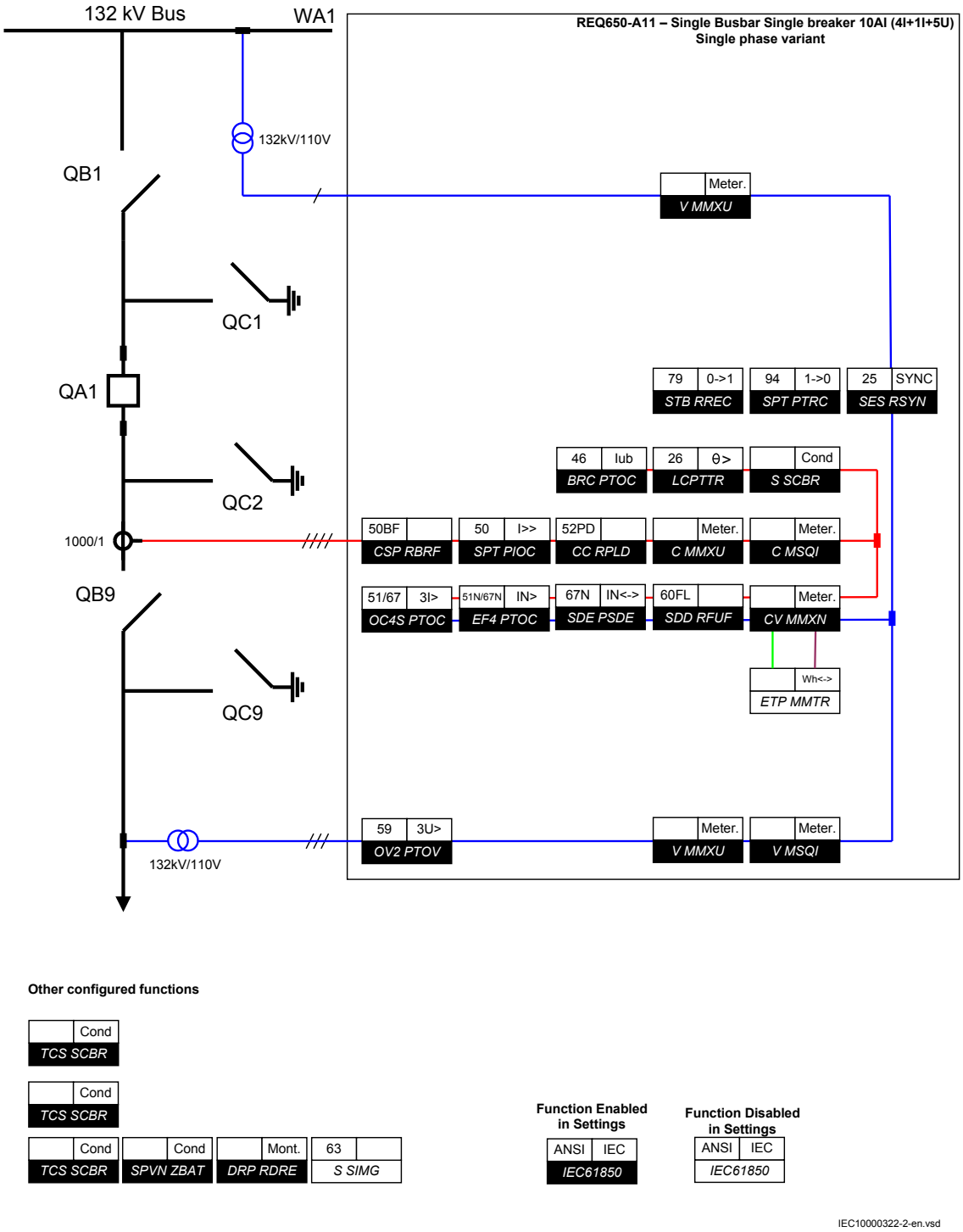

Figure 2. Typical application example of the REQ650 A11 used as backup protection in a single busbar single breaker arrangement when single-phase trip is required

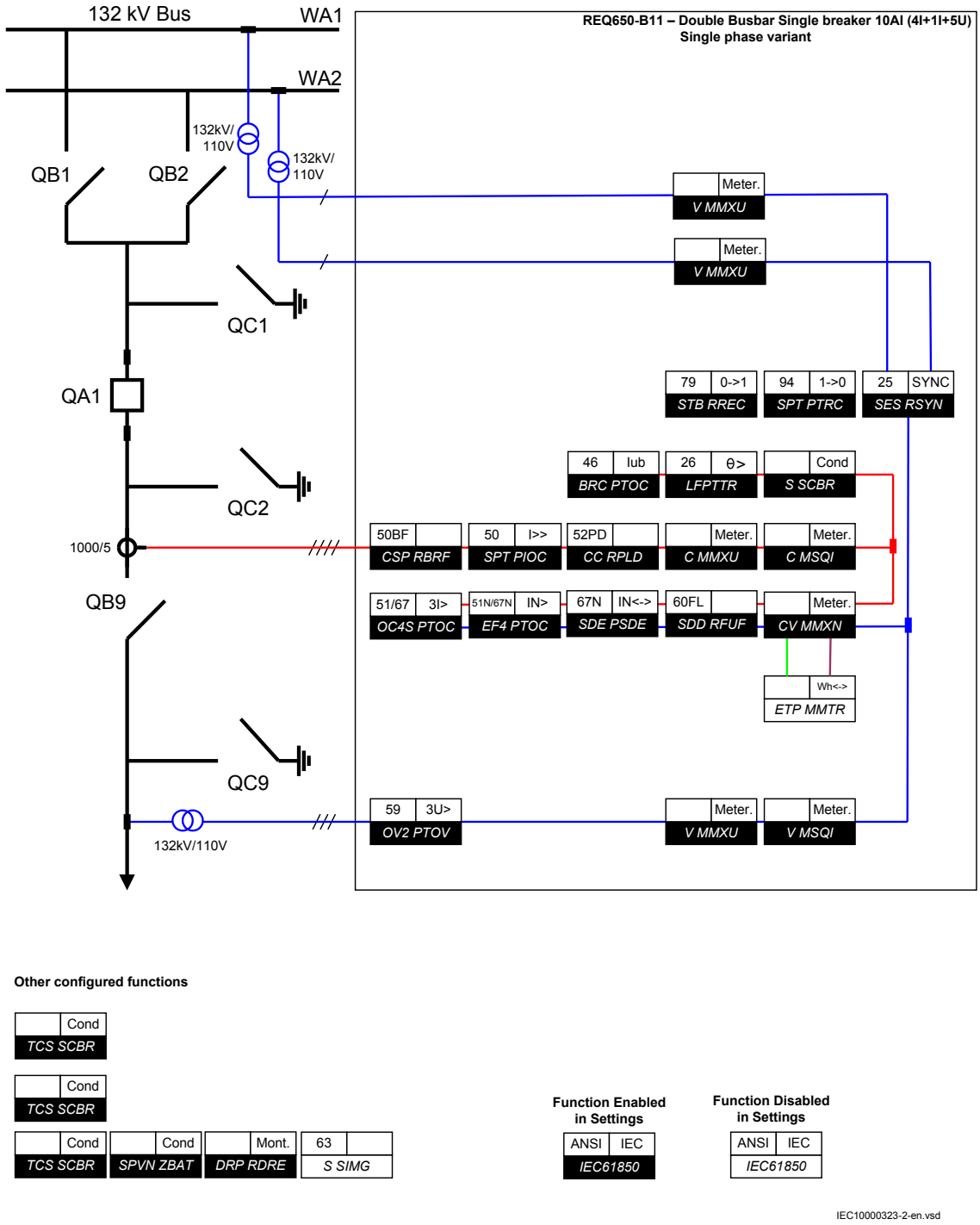

Figure 3. Typical application example of the REQ650 B11 used as backup protection in double busbar single breaker arrangement when single-phase trip is required

3. Available functions

Back-up protection functions

IEC 61850/ Function block name	ANSI	Function description	Breaker			
			REQ650	REQ650 (A01) 3Ph/1CB/1BB	REQ650 (A11) 1Ph/1CB/1BB	REQ650 (B11) 1Ph/1CB/2BB
Current protection						
PHPIOC	50	Instantaneous phase overcurrent protection, 3–phase output	0–1	1		
SPTPIOC	50	Instantaneous phase overcurrent protection, phase segregated output	0–1		1	1
OC4PTOC	51	Four step phase overcurrent protection, 3–phase output	0–1	1		
OC4SPTOC	51/67	Four step phase overcurrent protection, phase segregated output	0–1		1	1
EFPIOC	50N	Instantaneous residual overcurrent protection	0–1	1	1	1
EF4PTOC	51N/67N	Four step residual overcurrent protection, zero/negative sequence direction	0–1	1	1	1
SDEPSDE	67N	Sensitive directional residual overcurrent and power protection	0–1	1	1	1
LCPTTR	26	Thermal overload protection, one time constant, Celsius	0–1	1	1	1
LFPTTR	26	Thermal overload protection, one time constant, Fahrenheit	0–1	1	1	1
CCRBRF	50BF	Breaker failure protection, 3–phase activation and output	0–1	1		
CSPRBRF	50BF	Breaker failure protection, phase segregated activation and output	0–1		1	1
STBPTOC	50STB	Stub protection	0–1	1	1	1
CCRPLD	52PD	Pole discordance protection	0–1	1	1	1
BRCPTOC	46	Broken conductor check	0–1	1	1	1
GUPPDUP	37	Directional underpower protection	0–1	1	1	1
GOPPDOP	32	Directional overpower protection	0–1	1	1	1
DNSPTOC	46	Negative sequence based overcurrent function	0–1	1	1	1
Voltage protection						
UV2PTUV	27	Two step undervoltage protection	0–1	1	1	1
OV2PTOV	59	Two step overvoltage protection	0–1	1	1	1

IEC 61850/ Function block name	ANSI	Function description	Breaker			
			REQ650	REQ650 (A01) 3Ph/1CB/1BB	REQ650 (A11) 1Ph/1CB/1BB	REQ650 (B11) 1Ph/1CB/2BB
ROV2PTOV	59N	Two step residual overvoltage protection	0–1	1	1	1
LOVPTUV	27	Loss of voltage check	0–1	1	1	1
Frequency protection						
SAPTUF	81	Underfrequency function	0–2	2	2	2
SAPTOF	81	Overfrequency function	0–2	2	2	2
SAPFRC	81	Rate-of-change frequency protection	0–2	2	2	2

Control and monitoring functions

IEC 61850/Function block name	ANSI	Function description	Breaker			
			REQ650	REQ650 (A01) 3Ph/1CB/1BB	REQ650 (A11) 1Ph/1CB/1BB	REQ650 (B11) 1Ph/1CB/2BB
Control						
SESRSYN	25	Synchrocheck, energizing check, and synchronizing	0–1	1	1	1
SMBRREC	79	Autorecloser for 3–phase operation	0–1	1		
STBRREC	79	Autorecloser for 1/3–phase operation	0–1		1	1
QCBAY		Bay control	1	1	1	1
LOCREM		Handling of LR-switch positions	1	1	1	1
LOCREMCTRL		LHMI control of Permitted Source To Operate (PSTO)	1	1	1	1
CBC1		Circuit breaker for 1CB	1	1	1	1
SLGGIO		Logic Rotating Switch for function selection and LHMI presentation	15	15	15	15
VSGGIO		Selector mini switch extension	20	20	20	20
DPGGIO		IEC 61850 generic communication I/O functions double point	16	16	16	16
SPC8GGIO		Single point generic control 8 signals	5	5	5	5
AUTOBITS		AutomationBits, command function for DNP3.0	3	3	3	3
I103CMD		Function commands for IEC60870-5-103	1	1	1	1
I103IEDCMD		IED commands for IEC60870-5-103	1	1	1	1
I103USRCMD		Function commands user defined for IEC60870-5-103	4	4	4	4
I103GENCMD		Function commands generic for IEC60870-5-103	50	50	50	50
I103POSCMD		IED commands with position and select for IEC60870-5-103	50	50	50	50
Secondary system supervision						
CCSRDIF	87	Current circuit supervision	0–1	1	1	1
SDDRFUF		Fuse failure supervision	0–1	1	1	1
TCSSCBR		Breaker close/trip circuit monitoring	3	3	3	3

IEC 61850/Function block name	ANSI	Function description	Breaker			
			REQ650	REQ650 (A01) 3Ph/1CB/1BB	REQ650 (A11) 1Ph/1CB/1BB	REQ650 (B11) 1Ph/1CB/2BB
Logic						
SMPPTRC	94	Tripping logic, common 3–phase output	0–1	1		
SPTPTRC	94	Tripping logic, phase segregated output	0–1		1	1
TMAGGIO		Trip matrix logic	12	12	12	12
OR		Configurable logic blocks, OR gate	283	283	283	283
INVERTER		Configurable logic blocks, Inverter gate	140	140	140	140
PULSETIMER		Configurable logic blocks, Pulse timer	40	40	40	40
GATE		Configurable logic blocks, Controllable gate	40	40	40	40
XOR		Configurable logic blocks, exclusive OR gate	40	40	40	40
LOOPDELAY		Configurable logic blocks, loop delay	40	40	40	40
TIMERSET		Configurable logic blocks, timer function block	40	40	40	40
AND		Configurable logic blocks, AND gate	280	280	280	280
SRMEMORY		Configurable logic blocks, set-reset memory flip-flop gate	40	40	40	40
RSMEMORY		Configurable logic blocks, reset-set memory flip-flop gate	40	40	40	40
FXDSIGN		Fixed signal function block	1	1	1	1
B16I		Boolean 16 to Integer conversion	16	16	16	16
B16IFCVI		Boolean 16 to Integer conversion with logic node representation	16	16	16	16
IB16A		Integer to Boolean 16 conversion	16	16	16	16
IB16FCVB		Integer to Boolean 16 conversion with logic node representation	16	16	16	16
Monitoring						
CVMMXN		Measurements	6	6	6	6
CMMXU		Phase current measurement	10	10	10	10

IEC 61850/Function block name	ANSI	Function description	Breaker			
			REQ650	REQ650 (A01) 3Ph/1CB/1BB	REQ650 (A11) 1Ph/1CB/1BB	REQ650 (B11) 1Ph/1CB/2BB
VMMXU		Phase-phase voltage measurement	6	6	6	6
CMSQI		Current sequence component measurement	6	6	6	6
VMSQI		Voltage sequence measurement	6	6	6	6
VNMMXU		Phase-neutral voltage measurement	6	6	6	6
AISVBAS		Function block for service values presentation of the analog inputs	1	1	1	1
TM_P_P2		Function block for service values presentation of primary analog inputs 600TRM	1	1	1	1
AM_P_P4		Function block for service values presentation of primary analog inputs 600AIM	1	1	1	1
TM_S_P2		Function block for service values presentation of secondary analog inputs 600TRM	1	1	1	1
AM_S_P4		Function block for service values presentation of secondary analog inputs 600AIM	1	1	1	1
CNTGGIO		Event counter	5	5	5	5
DRPRDRE		Disturbance report	1	1	1	1
AxRADR		Analog input signals	4	4	4	4
BxRBDR		Binary input signals	6	6	6	6
SPGGIO		IEC 61850 generic communication I/O functions	64	64	64	64
SP16GGIO		IEC 61850 generic communication I/O functions 16 inputs	16	16	16	16
MVGGIO		IEC 61850 generic communication I/O functions	16	16	16	16
MVEXP		Measured value expander block	66	66	66	66
SPVNZBAT		Station battery supervision	0–1	1	1	1
SSIMG	63	Insulation gas monitoring function	0–1	1	1	1
SSIML	71	Insulation liquid monitoring function	0–1	1	1	1
SSCBR		Circuit breaker condition monitoring	0–1	1	1	1

IEC 61850/Function block name	ANSI	Function description	Breaker			
			REQ650	REQ650 (A01) 3Ph/1CB/1BB	REQ650 (A11) 1Ph/1CB/1BB	REQ650 (B11) 1Ph/1CB/2BB
I103MEAS		Measurands for IEC60870-5-103	1	1	1	1
I103MEASUSR		Measurands user defined signals for IEC60870-5-103	3	3	3	3
I103AR		Function status auto-recloser for IEC60870-5-103	1	1	1	1
I103EF		Function status earth-fault for IEC60870-5-103	1	1	1	1
I103FLTPROT		Function status fault protection for IEC60870-5-103	1	1	1	1
I103IED		IED status for IEC60870-5-103	1	1	1	1
I103SUPERV		Supervison status for IEC60870-5-103	1	1	1	1
I103USRDEF		Status for user defined signals for IEC60870-5-103	20	20	20	20
Metering						
PCGGIO		Pulse counter logic	16	16	16	16
ETPMMTR		Function for energy calculation and demand handling	3	3	3	3

Communication

IEC 61850/Function block name	ANSI	Function description	Breaker			
			REQ650	REQ650 (A01) 3Ph/1CB/1BB	REQ650 (A11) 1Ph/1CB/1BB	REQ650 (B11) 1Ph/1CB/2BB
Station communication						
IEC61850-8-1		IEC 61850 communication protocol	1	1	1	1
DNPGEN		DNP3.0 for TCP/IP communication protocol	1	1	1	1
RS485DNP		DNP3.0 for EIA-485 communication protocol	1	1	1	1
CH1TCP		DNP3.0 for TCP/IP communication protocol	1	1	1	1
CH2TCP		DNP3.0 for TCP/IP communication protocol	1	1	1	1
CH3TCP		DNP3.0 for TCP/IP communication protocol	1	1	1	1
CH4TCP		DNP3.0 for TCP/IP communication protocol	1	1	1	1
OPTICALDNP		DNP3.0 for optical serial communication	1	1	1	1
MSTSERIAL		DNP3.0 for serial communication protocol	1	1	1	1
MST1TCP		DNP3.0 for TCP/IP communication protocol	1	1	1	1
MST2TCP		DNP3.0 for TCP/IP communication protocol	1	1	1	1
MST3TCP		DNP3.0 for TCP/IP communication protocol	1	1	1	1
MST4TCP		DNP3.0 for TCP/IP communication protocol	1	1	1	1
RS485GEN		RS485	1	1	1	1
OPTICALPROT		Operation selection for optical serial	1	1	1	1
RS485PROT		Operation selection for RS485	1	1	1	1
DNPFREC		DNP3.0 fault records for TCP/IP communication protocol	1	1	1	1
OPTICAL103		IEC60870-5-103 Optical serial communication	1	1	1	1

IEC 61850/Function block name	ANSI	Function description	Breaker			
			REQ650	REQ650 (A01) 3Ph/1CB/1BB	REQ650 (A11) 1Ph/1CB/1BB	REQ650 (B11) 1Ph/1CB/2BB
RS485103		IEC60870-5-103 serial communication for RS485	1	1	1	1
GOOSEINTLKRCV		Horizontal communication via GOOSE for interlocking	59	59	59	59
GOOSEBINRCV		GOOSE binary receive	4	4	4	4
ETHFRNT ETHLAN1 GATEWAY		Ethernet configuration of front port, LAN1 port and gateway	1	1	1	1
GOOSEDPRCV		GOOSE function block to receive a double point value	32	32	32	32
GOOSEINTRCV		GOOSE function block to receive an integer value	32	32	32	32
GOOSEMVRCV		GOOSE function block to receive a measurand value	16	16	16	16
GOOSESPRCV		GOOSE function block to receive a single point value	64	64	64	64

Basic IED functions

IEC 61850/Function block name	Function description	
Basic functions included in all products		
INTERRSIG	Self supervision with internal event list	1
SELFSUPEVLST	Self supervision with internal event list	1
TIMESYNCHGEN	Time synchronization	1
SNTP	Time synchronization	1
DTSBEGIN, DTSEND, TIMEZONE	Time synchronization, daylight saving	1
IRIG-B	Time synchronization	1
SETGRPS	Setting group handling	1
ACTVGRP	Parameter setting groups	1
TESTMODE	Test mode functionality	1
CHNGLCK	Change lock function	1
TERMINALID	IED identifiers	1
PRODINF	Product information	1
SYSTEMTIME	System time	1
RUNTIME	IED Runtime comp	1
PRIMVAL	Primary system values	1
SMAI_20_1 - SMAI_20_12	Signal matrix for analog inputs	2
3PHSUM	Summation block 3 phase	12
GBASVAL	Global base values for settings	6
ATHSTAT	Authority status	1
ATHCHCK	Authority check	1
SPACOMMMAP	SPA communication mapping	1
FTPACCS	FTP access with password	1
DOSFRNT	Denial of service, frame rate control for front port	1
DOSLAN1	Denial of service, frame rate control for LAN1	1
DOSSCKT	Denial of service, socket flow control	1
SAFEFILECOPY	Safe file copy function	1
SPATD	Date and time via SPA protocol	1
BCSCONF	Basic communication system	1

4. Current protection

Instantaneous phase overcurrent protection, 3-phase output PHPIOC

The instantaneous three phase overcurrent function has a low transient overreach and short tripping time to allow use as a high set short-circuit protection function.

Instantaneous phase overcurrent protection, phase segregated output SPTPIOC

The instantaneous three phase overcurrent function has a low transient overreach and short tripping time to allow use as a high set short-circuit protection function and where the requirement for tripping is one- and/or three-phase.

Four step phase overcurrent protection, 3-phase output OC4PTOC

The four step phase overcurrent protection function OC4PTOC has an inverse or definite time delay independent for step 1 and 4 separately. Step 2 and 3 are always definite time delayed.

All IEC and ANSI inverse time characteristics are available.

The directional function is voltage polarized with memory. The function can be set to be directional or non-directional independently for each of the steps.

A 2nd harmonic blocking can be set individually for each step.

Four step phase overcurrent protection, phase segregated output OC4SPTOC

The four step phase overcurrent function, phase segregated output (OC4SPTOC) has an inverse or definite time delay independent for each step separately.

All IEC and ANSI time delayed characteristics are available.

The directional function is voltage polarized with memory. The function can be set to be directional or non-directional independently for each of the steps.

The tripping can be one- and/or three-phase.

Instantaneous residual overcurrent protection EFPIOC

The Instantaneous residual overcurrent protection EFPIOC has a low transient overreach and short tripping times to allow the use for instantaneous earth-fault protection, with the reach limited to less than the typical eighty percent of the line at minimum source impedance. EFPIOC can be configured to measure the residual current from the three-phase current inputs or the current from a separate current input. EFPIOC can be blocked by activating the input BLOCK.

Four step residual overcurrent protection, zero sequence and negative sequence direction EF4PTOC

The four step residual overcurrent protection, zero or negative sequence direction (EF4PTOC) has a settable inverse or definite time delay independent for step 1 and 4 separately. Step 2 and 3 are always definite time delayed.

All IEC and ANSI inverse time characteristics are available.

EF4PTOC can be set directional or non-directional independently for each of the steps.

The directional part of the function can be set to operate on following combinations:

- Directional current (I3PDir) versus Polarizing voltage (U3PPol)
- Directional current (I3PDir) versus Polarizing current (I3PPol)
- Directional current (I3PDir) versus Dual polarizing (UPol+ZPol x IPol) where ZPol = RPol + jXPol

IDir, UPol and IPol can be independently selected to be either zero sequence or negative sequence.

Second harmonic blocking restraint level can be set for the function and can be used to block each step individually.

Sensitive directional residual overcurrent and power protection SDEPSDE

In isolated networks or in networks with high impedance earthing, the earth fault current is significantly smaller than the short circuit currents. In addition to this, the magnitude of the fault current is almost independent on the fault location in the network. The protection can be selected to

use either the residual current or residual power component $3U_0 \cdot 3I_0 \cdot \cos \varphi$, for operating quantity. There is also available one non-directional $3I_0$ step and one non-directional $3U_0$ overvoltage tripping step.

Thermal overload protection, one time constant

The increasing utilizing of the power system closer to the thermal limits has generated a need of a thermal overload protection also for power lines.

A thermal overload will often not be detected by other protection functions and the introduction of the thermal overload protection can allow the protected circuit to operate closer to the thermal limits.

The three-phase current measuring protection has an I^2t characteristic with settable time constant and a thermal memory. The temperature is displayed in either in Celsius or in Fahrenheit depending on whether the function used is Thermal overload protection one time constant, Celsius LCPTTR or Fahrenheit LFPTTR.

An alarm level gives early warning to allow operators to take action well before the line is tripped.

Breaker failure protection, 3-phase activation and output

CCRBRF can be current based, contact based, or an adaptive combination of these two conditions.

Breaker failure protection, 3-phase activation and output (CCRBRF) ensures fast back-up tripping of surrounding breakers in case the own breaker fails to open. CCRBRF can be current based, contact based, or an adaptive combination of these two conditions.

Current check with extremely short reset time is used as check criterion to achieve high security against unnecessary operation.

Contact check criteria can be used where the fault current through the breaker is small.

Breaker failure protection, 3-phase activation and output (CCRBRF) current criteria can be fulfilled by one or two phase currents the residual current, or one phase current plus residual current. When those currents exceed the user defined settings, the function is triggered. These conditions increase the security of the back-up trip command.

CCRBRF function can be programmed to give a three-phase re-trip of the own breaker to avoid unnecessary tripping of surrounding breakers.

Breaker failure protection, phase segregated activation and output

Breaker failure protection, phase segregated activation and output CSPRBRF ensures fast back-up tripping of surrounding breakers in case of own breaker failure to open. CSPRBRF can be current based, contact based, or adaptive combination between these two principles.

A current check with extremely short reset time is used as a check criterion to achieve a high security against unnecessary operation.

A contact check criteria can be used where the fault current through the breaker is small.

CSPRBRF function current criteria can be fulfilled by one or two phase currents, or one phase current plus residual current. When those currents exceed the user defined settings, the function is activated. These conditions increase the security of the back-up trip command.

CSPRBRF can be programmed to give an one- or three-phase re-trip of the own breaker to avoid unnecessary tripping of surrounding breakers at an incorrect initiation due to mistakes during testing.

Stub protection STBPTOC

When a power line is taken out of service for maintenance and the line disconnector is opened the voltage transformers will mostly be outside on the disconnected part. The primary line distance protection will thus not be able to operate and must be blocked.

The stub protection STBPTOC covers the zone between the current transformers and the open disconnector. The three-phase instantaneous overcurrent function is released from a normally open, NO (b) auxiliary contact on the line disconnector.

Pole discordance protection CCRPLD

Circuit breakers and disconnectors can end up with thes in different positions (close-open), due

to electrical or mechanical failures. An open phase can cause negative and zero sequence currents which cause thermal stress on rotating machines and can cause unwanted operation of zero sequence or negative sequence current functions.

Normally the own breaker is tripped to correct such a situation. If the situation persists the surrounding breakers should be tripped to clear the unsymmetrical load situation.

The pole discordance function operates based on information from the circuit breaker logic with additional criteria from unsymmetrical phase currents when required.

Broken conductor check BRCPTOC

Conventional protection functions can not detect the broken conductor condition. Broken conductor check (BRCPTOC) function, consisting of continuous current unsymmetrical check on the line where the IED is connected will give alarm or trip at detecting broken conductors.

Directional over/underpower protection GOPPDOP/GUPPDUP

The directional over-/under-power protection GOPPDOP/GUPPDUP can be used wherever a high/low active, reactive or apparent power protection or alarming is required. The functions can alternatively be used to check the direction of active or reactive power flow in the power system. There are a number of applications where such functionality is needed. Some of them are:

- detection of reversed active power flow
- detection of high reactive power flow

Each function has two steps with definite time delay. Reset times for both steps can be set as well.

Negative sequence based overcurrent function DNSPTOC

Negative sequence based overcurrent function (DNSPTOC) is typically used as sensitive earth-fault protection of power lines, where incorrect zero sequence polarization may result from mutual induction between two or more parallel lines.

Additionally, it is applied in applications on cables, where zero sequence impedance depends on the fault current return paths, but the cable negative sequence impedance is practically constant.

The directional function is current and voltage polarized. The function can be set to forward, reverse or non-directional independently for each step.

DNSPTOC protects against all unbalanced faults including phase-to-phase faults. The minimum start current of the function must be set to above the normal system unbalance level in order to avoid unwanted operation.

5. Voltage protection

Two step undervoltage protection UV2PTUV

Undervoltages can occur in the power system during faults or abnormal conditions. Two step undervoltage protection (UV2PTUV) function can be used to open circuit breakers to prepare for system restoration at power outages or as long-time delayed back-up to primary protection.

UV2PTUV has two voltage steps, where step 1 is settable as inverse or definite time delayed. Step 2 is always definite time delayed.

Two step overvoltage protection OV2PTOV

Overvoltages may occur in the power system during abnormal conditions such as sudden power loss, tap changer regulating failures, open line ends on long lines etc.

Two step overvoltage protection (OV2PTOV) function can be used to detect open line ends, normally then combined with a directional reactive over-power function to supervise the system voltage. When triggered, the function will cause an alarm, switch in reactors, or switch out capacitor banks.

OV2PTOV has two voltage steps, where step 1 can be set as inverse or definite time delayed. Step 2 is always definite time delayed.

OV2PTOV has an extremely high reset ratio to allow settings close to system service voltage.

Two step residual overvoltage protection ROV2PTOV

Residual voltages may occur in the power system during earth faults.

Two step residual overvoltage protection ROV2PTOV function calculates the residual voltage from the three-phase voltage input transformers or measures it from a single voltage input transformer fed from an open delta or neutral point voltage transformer.

ROV2PTOV has two voltage steps, where step 1 can be set as inverse or definite time delayed. Step 2 is always definite time delayed.

Loss of voltage check LOVPTUV

Loss of voltage check (LOVPTUV) is suitable for use in networks with an automatic system restoration function. LOVPTUV issues a three-pole trip command to the circuit breaker, if all three phase voltages fall below the set value for a time longer than the set time and the circuit breaker remains closed.

6. Frequency protection

Underfrequency protection SAPTUF

Underfrequency occurs as a result of a lack of sufficient generation in the network.

Underfrequency protection SAPTUF is used for load shedding systems, remedial action schemes, gas turbine startup and so on.

SAPTUF is also provided with undervoltage blocking.

Overfrequency protection SAPTOF

Overfrequency protection function SAPTOF is applicable in all situations, where reliable detection of high fundamental power system frequency is needed.

Overfrequency occurs because of sudden load drops or shunt faults in the power network. Close to the generating plant, generator governor problems can also cause over frequency.

SAPTOF is used mainly for generation shedding and remedial action schemes. It is also used as a frequency stage initiating load restoring.

SAPTOF is provided with an undervoltage blocking.

Rate-of-change frequency protection SAPFRC

Rate-of-change frequency protection function (SAPFRC) gives an early indication of a main disturbance in the system. SAPFRC can be used for generation shedding, load shedding and remedial action schemes. SAPFRC can discriminate between positive or negative change of frequency.

SAPFRC is provided with an undervoltage blocking.

7. Secondary system supervision

Current circuit supervision CCSRDIF

Open or short circuited current transformer cores can cause unwanted operation of many protection functions such as differential, earth-fault current and negative-sequence current functions.

It must be remembered that a blocking of protection functions at an occurrence of open CT circuit will mean that the situation will remain and extremely high voltages will stress the secondary circuit.

Current circuit supervision (CCSRDIF) compares the residual current from a three phase set of current transformer cores with the neutral point current on a separate input taken from another set of cores on the current transformer.

A detection of a difference indicates a fault in the circuit and is used as alarm or to block protection functions expected to give unwanted tripping.

Fuse failure supervision SDDRFUF

The aim of the fuse failure supervision function (SDDRFUF) is to block voltage measuring functions at failures in the secondary circuits between the voltage transformer and the IED in order to avoid unwanted operations that otherwise might occur.

The fuse failure supervision function basically has three different algorithms, negative sequence and zero sequence based algorithms and an additional delta voltage and delta current algorithm.

The negative sequence detection algorithm is recommended for IEDs used in isolated or high-impedance earthed networks. It is based on the negative-sequence measuring quantities, a high value of negative sequence voltage $3U_2$ without

the presence of the negative-sequence current $3I_2$.

The zero sequence detection algorithm is recommended for IEDs used in directly or low impedance earthed networks. It is based on the zero sequence measuring quantities, a high value of zero sequence voltage $3U_0$ without the presence of the zero sequence current $3I_0$.

For better adaptation to system requirements, an operation mode setting has been introduced which makes it possible to select the operating conditions for negative sequence and zero sequence based function. The selection of different operation modes makes it possible to choose different interaction possibilities between the negative sequence and zero sequence based algorithm.

A criterion based on delta current and delta voltage measurements can be added to the fuse failure supervision function in order to detect a three phase fuse failure, which in practice is more associated with voltage transformer switching during station operations.

Breaker close/trip circuit monitoring TCSSCBR

The trip circuit supervision function TCSSCBR is designed to supervise the control circuit of the circuit breaker. The invalidity of a control circuit is detected by using a dedicated output contact that contains the supervision functionality.

The function operates after a predefined operating time and resets when the fault disappears.

8. Control

Synchrocheck, energizing check, and synchronizing SESRSYN

The Synchronizing function allows closing of asynchronous networks at the correct moment including the breaker closing time, which improves the network stability.

Synchrocheck, energizing check, and synchronizing (SESRSYN) function checks that the voltages on both sides of the circuit breaker are in synchronism, or with at least one side dead to ensure that closing can be done safely.

SESRSYN function includes a built-in voltage selection scheme for double bus and 1½ breaker or ring busbar arrangements.

Manual closing as well as automatic reclosing can be checked by the function and can have different settings.

For systems which are running asynchronous a synchronizing function is provided. The main purpose of the synchronizing function is to provide controlled closing of circuit breakers when two asynchronous systems are going to be connected. It is used for slip frequencies that are larger than those for synchrocheck and lower than a set maximum level for the synchronizing function.

Autorecloser for 3-phase operation

The autorecloser SMBRREC function provides high-speed and/or delayed auto-reclosing for single breaker applications.

Up to five three-phase reclosing attempts can be included by parameter setting.

The autoreclosing function can be configured to co-operate with a synchrocheck function.

Autorecloser for 1/3-phase operation STBRREC

The autoreclosing function provides high-speed and/or delayed auto-reclosing for single breaker applications.

Up to five reclosing attempts can be included by parameter setting. The first attempt can be single- and/or three phase for single-phase or multi-phase faults respectively.

Multiple autoreclosing functions are provided for multi-breaker arrangements. A priority circuit allows one circuit breaker to close first and the second will only close if the fault proved to be transient.

The autoreclosing function can be configured to co-operate with a synchrocheck function.

Bay control QCBAY

The Bay control QCBAY function is used together with Local remote and local remote control functions to handle the selection of the operator place per bay. QCBAY also provides blocking functions that can be distributed to different apparatuses within the bay.

Local remote LOCREM /Local remote control LOCREMCTRL

The signals from the local HMI or from an external local/remote switch are applied via the function blocks LOCREM and LOCREMCTRL to the Bay control (QCBAY) function block. A parameter in function block LOCREM is set to choose if the switch signals are coming from the local HMI or from an external hardware switch connected via binary inputs.

Circuit breaker control for circuit breaker, CBC1

The CBC1 consists of 3 functions:

- SCILO - The Logical node for interlocking. SCILO function is used to enable a switching operation if the interlocking conditions permit. SCILO function itself does not provide any interlocking functionality. The interlocking conditions are generated in separate function blocks containing the interlocking logic.
- SCSWI - The Switch controller initializes and supervises all functions to properly select and operate switching primary apparatuses. The Switch controller may handle and operate on one three-phase device.
- SXCBR - The purpose of SXCBR is to provide the actual status of positions and to perform the control operations, that is, pass all the commands to primary apparatuses in the form of circuit breakers via output boards and to supervise the switching operation and position.

Logic rotating switch for function selection and LHMI presentation SLGGIO

The logic rotating switch for function selection and LHMI presentation (SLGGIO) (or the selector switch function block) is used to get a selector switch functionality similar to the one provided by a hardware selector switch. Hardware selector switches are used extensively by utilities, in order to have different functions operating on pre-set values. Hardware switches are however sources for maintenance issues, lower system reliability and an extended purchase portfolio. The logic selector switches eliminate all these problems.

Selector mini switch VSGGIO

The Selector mini switch VSGGIO function block is a multipurpose function used for a variety of applications, as a general purpose switch.

VSGGIO can be controlled from the menu or from a symbol on the single line diagram (SLD) on the local HMI.

IEC 61850 generic communication I/O functions DPGGIO

The IEC 61850 generic communication I/O functions (DPGGIO) function block is used to send double indications to other systems or equipment in the substation. It is especially used in the interlocking and reservation station-wide logics.

Single point generic control 8 signals SPC8GGIO

The Single point generic control 8 signals (SPC8GGIO) function block is a collection of 8 single point commands, designed to bring in commands from REMOTE (SCADA) to those parts of the logic configuration that do not need extensive command receiving functionality (for example, SCSWI). In this way, simple commands can be sent directly to the IED outputs, without confirmation. Confirmation (status) of the result of the commands is supposed to be achieved by other means, such as binary inputs and SPGGIO function blocks. The commands can be pulsed or steady.

AutomationBits AUTOBITS

The Automation bits function (AUTOBITS) is used to configure the DNP3 protocol command handling.

9. Logic

Tripping logic common 3-phase output SMPPTRC

A function block for protection tripping is provided for each circuit breaker involved in the tripping of the fault. It provides pulse prolongation to ensure a three-phase trip pulse of sufficient length, as well as all functionality necessary for correct co-operation with autoreclosing functions.

The trip function block also includes functionality for breaker lock-out.

Tripping logic phase segregated output SPTPTRC

A function block for protection tripping is provided for each circuit breaker involved in the tripping of the fault. It provides the pulse prolongation to ensure an one- or three-phase trip pulse of sufficient length, as well as all functionality necessary for correct cooperation with autoreclosing and communication logic functions.

The trip function block includes functionality for evolving faults and breaker lock-out.

Trip matrix logic TMAGGIO

The Trip matrix logic TMAGGIO function is used to route trip signals and other logical output signals to the tripping logics SMPPTRC and SPTPTRC or to different output contacts on the IED.

TMAGGIO output signals and the physical outputs allows the user to adapt the signals to the physical tripping outputs according to the specific application needs.

Configurable logic blocks

A number of logic blocks and timers are available for the user to adapt the configuration to the specific application needs.

- OR function block.
- INVERTER function blocks that inverts the input signal.
- PULSETIMER function block can be used, for example, for pulse extensions or limiting of operation of outputs, settable pulse time.
- GATE function block is used for whether or not a signal should be able to pass from the input to the output.
- XOR function block.
- LOOPDELAY function block used to delay the output signal one execution cycle.
- TIMERSET function has pick-up and drop-out delayed outputs related to the input signal. The timer has a settable time delay and must be On for the input signal to activate the output with the appropriate time delay.
- AND function block.
- SRMEMORY function block is a flip-flop that can set or reset an output from two inputs respectively. Each block has two outputs where one is inverted. The memory setting controls if the block's output should reset or return to the state it was, after a power interruption. The SET input has priority if both SET and RESET inputs are operated simultaneously.
- RSMEMORY function block is a flip-flop that can reset or set an output from two inputs respectively. Each block has two outputs where one is inverted. The memory setting controls if the block's output should reset or return to the state it was, after a power interruption. The RESET input has priority if both SET and RESET are operated simultaneously.

Boolean 16 to Integer conversion B16I

Boolean 16 to integer conversion function (B16I) is used to transform a set of 16 binary (logical) signals into an integer.

Boolean 16 to Integer conversion with logic node representation B16IFCVI

Boolean 16 to integer conversion with logic node representation function (B16IFCVI) is used to transform a set of 16 binary (logical) signals into an integer.

Integer to Boolean 16 conversion IB16A

Integer to boolean 16 conversion function (IB16A) is used to transform an integer into a set of 16 binary (logical) signals.

Integer to Boolean 16 conversion with logic node representation IB16FCVB

Integer to boolean conversion with logic node representation function (IB16FCVB) is used to transform an integer to 16 binary (logic) signals.

IB16FCVB function can receive remote values over IEC61850 depending on the operator position input (PSTO).

10. Monitoring

IEC61850 generic communication I/O function SPGGIO

IEC61850 generic communication I/O functions (SPGGIO) is used to send one single logical signal to other systems or equipment in the substation.

IEC61850 generic communication 1/O function 16 inputs

IEC 61850 generic communication I/O functions 16 inputs (SP16GGIO) function is used to send up to 16 logical signals to other systems or equipment in the substation.

Measurements CVMMXN, CMMXU, VNMMXU, VMMXU, CMSQI, VMSQI

The measurement functions are used to get on-line information from the IED. These service values make it possible to display on-line information on the local HMI and on the Substation automation system about:

- measured voltages, currents, frequency, active, reactive and apparent power and power factor
- primary and secondary phasors
- current sequence components
- voltage sequence components

Event counter CNTGGIO

Event counter (CNTGGIO) has six counters which are used for storing the number of times each counter input has been activated.

Disturbance report DRPRDRE

Complete and reliable information about disturbances in the primary and/or in the secondary system together with continuous event-logging is accomplished by the disturbance report functionality.

Disturbance report DRPRDRE, always included in the IED, acquires sampled data of all selected analog input and binary signals connected to the function block with a, maximum of 40 analog and 96 binary signals.

The Disturbance report functionality is a common name for several functions:

- Event list
- Indications
- Event recorder
- Trip value recorder
- Disturbance recorder

The Disturbance report function is characterized by great flexibility regarding configuration, starting conditions, recording times, and large storage capacity.

A disturbance is defined as an activation of an input to the AxRADR or BxRBDR function blocks, which are set to trigger the disturbance recorder. All signals from start of pre-fault time to the end of post-fault time will be included in the recording.

Every disturbance report recording is saved in the IED in the standard Comtrade format. The same applies to all events, which are continuously saved in a ring-buffer. The local HMI is used to get information about the recordings. The disturbance report files may be uploaded to PCM600 for further analysis using the disturbance handling tool.

Event list DRPRDRE

Continuous event-logging is useful for monitoring the system from an overview perspective and is a complement to specific disturbance recorder functions.

The event list logs all binary input signals connected to the Disturbance report function. The list may contain up to 1000 time-tagged events stored in a ring-buffer.

Indications DRPRDRE

To get fast, condensed and reliable information about disturbances in the primary and/or in the secondary system it is important to know, for example binary signals that have changed status during a disturbance. This information is used in the short perspective to get information via the local HMI in a straightforward way.

There are three LEDs on the local HMI (green, yellow and red), which will display status information about the IED and the Disturbance report function (triggered).

The Indication list function shows all selected binary input signals connected to the Disturbance

report function that have changed status during a disturbance.

Event recorder DRPRDRE

Quick, complete and reliable information about disturbances in the primary and/or in the secondary system is vital, for example, time-tagged events logged during disturbances. This information is used for different purposes in the short term (for example corrective actions) and in the long term (for example functional analysis).

The event recorder logs all selected binary input signals connected to the Disturbance report function. Each recording can contain up to 150 time-tagged events.

The event recorder information is available for the disturbances locally in the IED.

The event recording information is an integrated part of the disturbance record (Comtrade file).

Trip value recorder DRPRDRE

Information about the pre-fault and fault values for currents and voltages are vital for the disturbance evaluation.

The Trip value recorder calculates the values of all selected analog input signals connected to the Disturbance report function. The result is magnitude and phase angle before and during the fault for each analog input signal.

The trip value recorder information is available for the disturbances locally in the IED.

The trip value recorder information is an integrated part of the disturbance record (Comtrade file).

Disturbance recorder DRPRDRE

The Disturbance recorder function supplies fast, complete and reliable information about disturbances in the power system. It facilitates understanding system behavior and related primary and secondary equipment during and after a disturbance. Recorded information is used for different purposes in the short perspective (for example corrective actions) and long perspective (for example functional analysis).

The Disturbance recorder acquires sampled data from selected analog- and binary signals connected to the Disturbance report function (maximum 40 analog and 96 binary signals). The binary signals available are the same as for the event recorder function.

The function is characterized by great flexibility and is not dependent on the operation of protection functions. It can record disturbances not detected by protection functions. Up to three seconds of data before the trigger instant can be saved in the disturbance file.

The disturbance recorder information for up to 100 disturbances are saved in the IED and the local HMI is used to view the list of recordings.

Measured value expander block MVEXP

The current and voltage measurements functions (CVMMXN, CMMXU, VMMXU and VNMMXU), current and voltage sequence measurement functions (CMSQI and VMSQI) and IEC 61850 generic communication I/O functions (MVGGIO) are provided with measurement supervision functionality. All measured values can be supervised with four settable limits: low-low limit, low limit, high limit and high-high limit. The measure value expander block has been introduced to enable translating the integer output signal from the measuring functions to 5 binary signals: below low-low limit, below low limit, normal, above high-high limit or above high limit. The output signals can be used as conditions in the configurable logic or for alarming purpose.

Station battery supervision SPVNZBAT

The station battery supervision function SPVNZBAT is used for monitoring battery terminal voltage.

SPVNZBAT activates the start and alarm outputs when the battery terminal voltage exceeds the set upper limit or drops below the set lower limit. A time delay for the overvoltage and undervoltage alarms can be set according to definite time characteristics.

In the definite time (DT) mode, SPVNZBAT operates after a predefined operate time and resets when the battery undervoltage or overvoltage condition disappears after reset time.

Insulation gas monitoring function SSIMG

Insulation gas monitoring function SSIMG is used for monitoring the circuit breaker condition. Binary

information based on the gas pressure in the circuit breaker is used as input signals to the function. In addition, the function generates alarms based on received information.

Insulation liquid monitoring function SSIML

Insulation liquid monitoring function SSIML is used for monitoring the circuit breaker condition. Binary information based on the oil level in the circuit breaker is used as input signals to the function. In addition, the function generates alarms based on received information.

Circuit breaker monitoring SSCBR

The circuit breaker condition monitoring function SSCBR is used to monitor different parameters of the circuit breaker. The breaker requires maintenance when the number of operations has reached a predefined value. The energy is calculated from the measured input currents as a sum of $I^{y}t$ values. Alarms are generated when the calculated values exceed the threshold settings.

The function contains a blocking functionality. It is possible to block the function outputs, if desired.

11. Metering

Pulse counter logic PCGGIO

Pulse counter (PCGGIO) function counts externally generated binary pulses, for instance pulses coming from an external energy meter, for calculation of energy consumption values. The pulses are captured by the BIO (binary input/output) module and then read by the PCGGIO function. A scaled service value is available over the station bus.

Function for energy calculation and demand handling ETPMMTR

Outputs from the Measurements (CVMMXN) function can be used to calculate energy consumption. Active as well as reactive values are calculated in import and export direction. Values can be read or generated as pulses. Maximum demand power values are also calculated by the function.

12. Human Machine interface

Local HMI

Figure 4. Local human-machine interface

The LHMI of the IED contains the following elements:

- Display (LCD)
- Buttons
- LED indicators
- Communication port

The LHMI is used for setting, monitoring and controlling.

The Local human machine interface, LHMI includes a graphical monochrome LCD with a resolution of 320x240 pixels. The character size may vary depending on selected language. The amount of characters and rows fitting the view depends on the character size and the view that is shown.

The LHMI is simple and easy to understand. The whole front plate is divided into zones, each with a well-defined functionality:

- Status indication LEDs
- Alarm indication LEDs which can indicate three states with the colors green, yellow and red, with user printable label. All LEDs are configurable from the PCM600 tool
- Liquid crystal display (LCD)
- Keypad with push buttons for control and navigation purposes, switch for selection between local and remote control and reset
- Five user programmable function buttons
- An isolated RJ45 communication port for PCM600

13. Basic IED functions

Self supervision with internal event list

The Self supervision with internal event list (INTERRSIG and SELFSUPEVLST) function reacts

to internal system events generated by the different built-in self-supervision elements. The internal events are saved in an internal event list.

Time synchronization

Use a common global source for example GPS time synchronization inside each substation as well as inside the area of the utility responsibility to achieve a common time base for the IEDs in a protection and control system. This makes comparison and analysis of events and disturbance data between all IEDs in the power system possible.

Time-tagging of internal events and disturbances are an excellent help when evaluating faults. Without time synchronization, only the events within the IED can be compared to one another. With time synchronization, events and disturbances within the entire station, and even between line ends, can be compared during evaluation.

In the IED, the internal time can be synchronized from a number of sources:

- SNTP
- IRIG-B
- DNP
- IEC60870-5-103

Parameter setting groups ACTVGRP

Use the four different groups of settings to optimize the IED operation for different power system conditions. Creating and switching between fine-tuned setting sets, either from the local HMI or configurable binary inputs, results in a highly adaptable IED that can cope with a variety of power system scenarios.

Test mode functionality TESTMODE

The protection and control IEDs may have many included functions. To make the testing procedure easier, the IEDs include the feature that allows individual blocking of all functions except the function(s) the shall be tested.

There are two ways of entering the test mode:

- By configuration, activating an input signal of the function block TESTMODE
- By setting the IED in test mode in the local HMI

While the IED is in test mode, all protection functions are blocked.

Any function can be unblocked individually regarding functionality and event signaling. This enables the user to follow the operation of one or several related functions to check functionality and to check parts of the configuration, and so on.

Change lock function CHNGLCK

Change lock function (CHNGLCK) is used to block further changes to the IED configuration and settings once the commissioning is complete. The purpose is to block inadvertent IED configuration changes beyond a certain point in time.

Authority status ATHSTAT

Authority status (ATHSTAT) function is an indication function block for user log-on activity.

Authority check ATHCHCK

To safeguard the interests of our customers, both the IED and the tools that are accessing the IED are protected, by means of authorization handling. The authorization handling of the IED and the PCM600 is implemented at both access points to the IED:

- local, through the local HMI
- remote, through the communication ports

14. Station communication

IEC 61850-8-1 communication protocol

The IED supports the communication protocols IEC 61850-8-1 and DNP3 over TCP/IP. All operational information and controls are available through these protocols. However, some communication functions, for example, horizontal communication (GOOSE) between the IEDs, is only enabled by the IEC 61850-8-1 communication protocol.

The IED is equipped with an optical Ethernet rear port for the substation communication standard IEC 61850-8-1. IEC 61850-8-1 protocol allows intelligent electrical devices (IEDs) from different vendors to exchange information and simplifies system engineering. Peer-to-peer communication according to GOOSE is part of the standard. Disturbance files uploading is provided.

Disturbance files are accessed using the IEC 61850-8-1 protocol. Disturbance files are available to any Ethernet based application via FTP in the standard Comtrade format. Further, the IED can send and receive binary values, double point values and measured values (for example from MMXU functions), together with their quality bit, using the IEC 61850-8-1 GOOSE profile. The IED meets the GOOSE performance requirements for tripping applications in substations, as defined by the IEC 61850 standard. The IED interoperates with other IEC 61850-compliant IEDs, tools, and systems and simultaneously reports events to five different clients on the IEC 61850 station bus.

The event system has a rate limiter to reduce CPU load. The event channel has a quota of 10 events/second. If the quota is exceeded the event channel transmission is blocked until the event changes is below the quota, no event is lost.

All communication connectors, except for the front port connector, are placed on integrated communication modules. The IED is connected to Ethernet-based communication systems via the fibre-optic multimode LC connector (100BASE-FX).

The IED supports SNTP and IRIG-B time synchronization methods with a time-stamping resolution of 1 ms.

- Ethernet based: SNTP and DNP3
- With time synchronization wiring: IRIG-B

The IED supports IEC 60870-5-103 time synchronization methods with a time stamping resolution of 5 ms.

Table 1. Supported station communication interfaces and protocols

Protocol	Ethernet	Serial	
	100BASE-FX LC	Glass fibre (ST connector)	EIA-485
IEC 61850–8–1	•	-	-
DNP3	•	•	•
IEC 60870-5-103	-	•	•

• = Supported

Horizontal communication via GOOSE for interlocking

GOOSE communication can be used for exchanging information between IEDs via the IEC 61850-8-1 station communication bus. This is typically used for sending apparatus position indications for interlocking or reservation signals for 1-of-n control. GOOSE can also be used to exchange any boolean, integer, double point and analog measured values between IEDs.

DNP3 protocol

DNP3 (Distributed Network Protocol) is a set of communications protocols used to communicate data between components in process automation systems. For a detailed description of the DNP3 protocol, see the DNP3 Communication protocol manual.

IEC 60870-5-103 communication protocol

IEC 60870-5-103 is an unbalanced (master-slave) protocol for coded-bit serial communication exchanging information with a control system, and with a data transfer rate up to 19200 bit/s. In IEC terminology, a primary station is a master and a secondary station is a slave. The communication is based on a point-to-point principle. The master must have software that can interpret IEC 60870-5-103 communication messages.

IEC 60870-5-103 protocol can be configured to use either the optical serial or RS485 serial communication interface on the COM05 communication module. The functions Operation selection for optical serial (OPTICALPROT) and Operation selection for RS485 (RS485PROT) are used to select the communication interface.

The functions IEC60870-5-103 Optical serial communication (OPTICAL103) and IEC60870-5-103 serial communication for RS485 (RS485103) are used to configure the communication parameters for either the optical serial or RS485 serial communication interfaces.

15. Hardware description

Layout and dimensions

Mounting alternatives

The following mounting alternatives are available (IP40 protection from the front):

- 19” rack mounting kit

See ordering for details about available mounting alternatives.

Rack mounting a single 3U IED

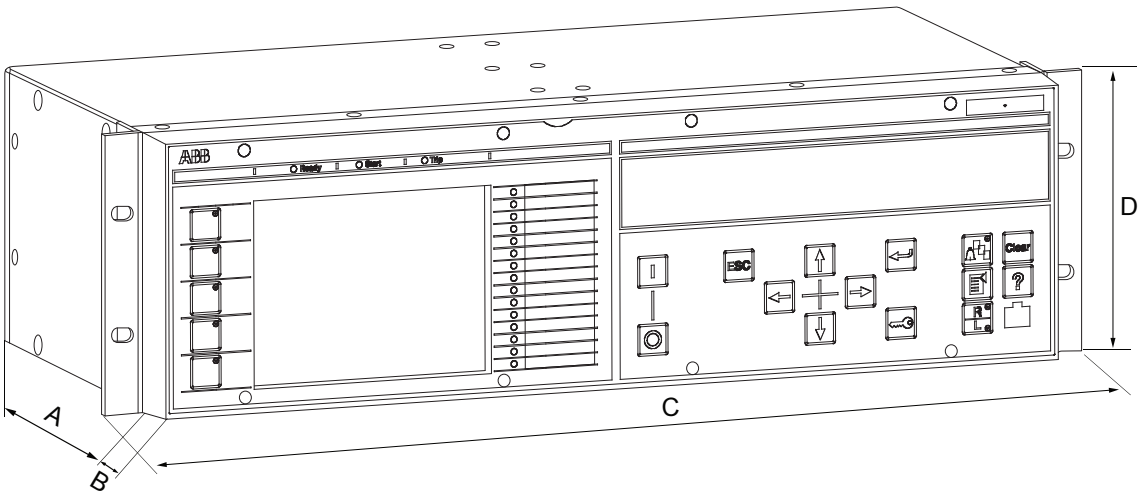

Figure 5. Rack mounted 3U IED

A 224 mm + 12 mm with ring-lug connectors

B 22.5 mm

C 482 mm

D 132 mm, 3U

16. Connection diagrams Customized

Connection diagrams for 650 series

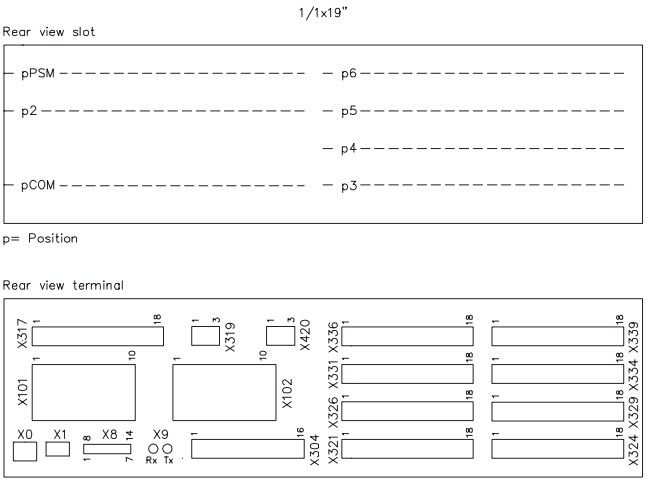

Designation for 3U, 1/1x19" casing with 1 TRM

Module	Slot	Terminal
COM	pCOM	X0, X1, X8, X9, X304
TRM	p2	X101, X102
PSM	pPSM	X317. X319, X420
BIO	p3	X321, X324
BIO	p4	X326, X329
BIO	p5	X331, X334
BIO	p6	X336, X339

Figure 6. Designation for 3U, 1/1x19" casing with 1 TRM

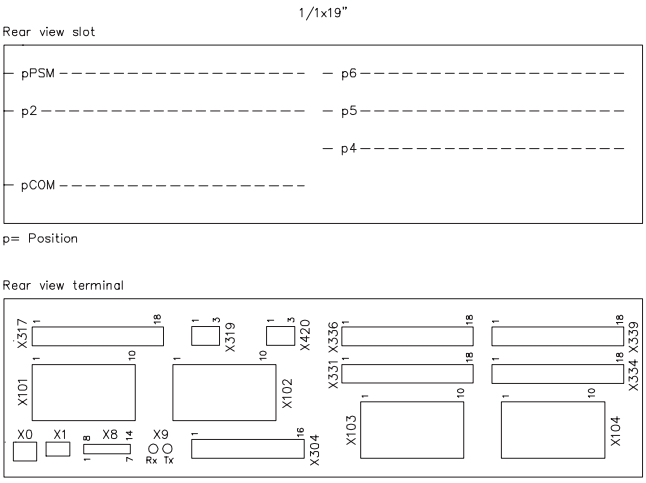

Designation for 3U, 1/1x19" casing with 1 TRM and 1 AIM

Module	Slot	Terminal
COM	pCOM	X0, X1, X8, X9, X304
TRM	p2	X101, X102
PSM	pPSM	X317, X319, X420
AIM	p4	X103, X104
BIO	p5	X331, X334
BIO	p6	X336, X339

Figure 7. Designation for 3U, 1/1x19" casing with 1 TRM and 1 AIM

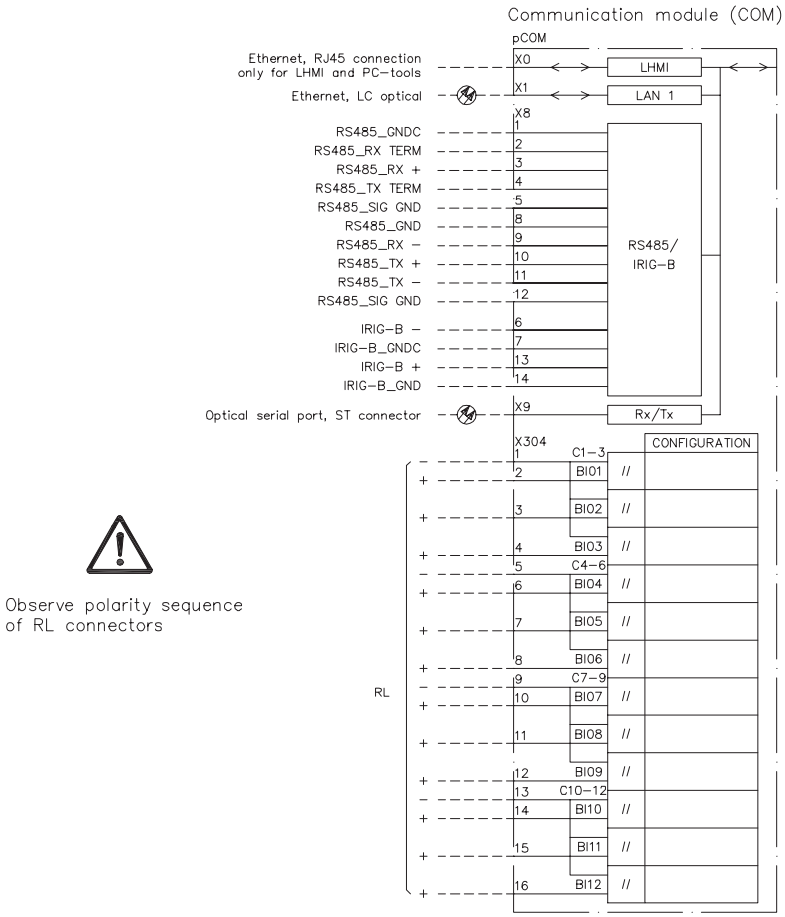

Figure 8. Communication module (COM)

Observe polarity sequence

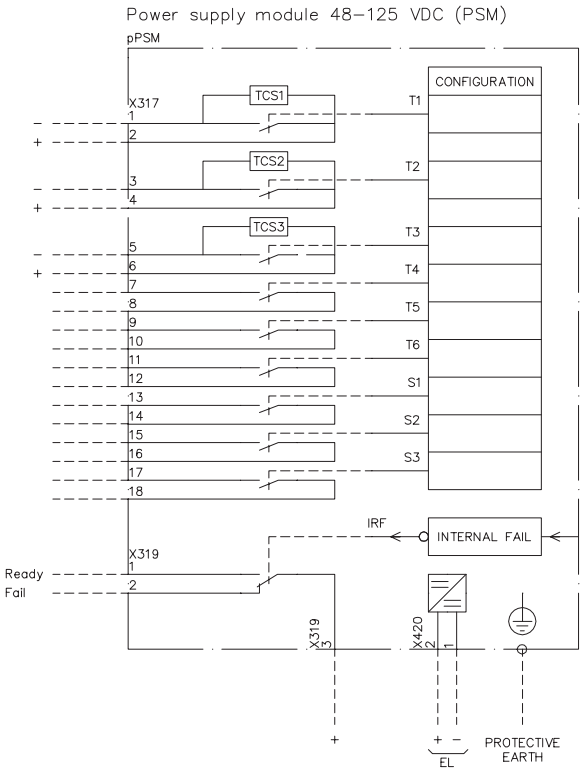

Figure 9. Power supply module (PSM) 48-125V DC

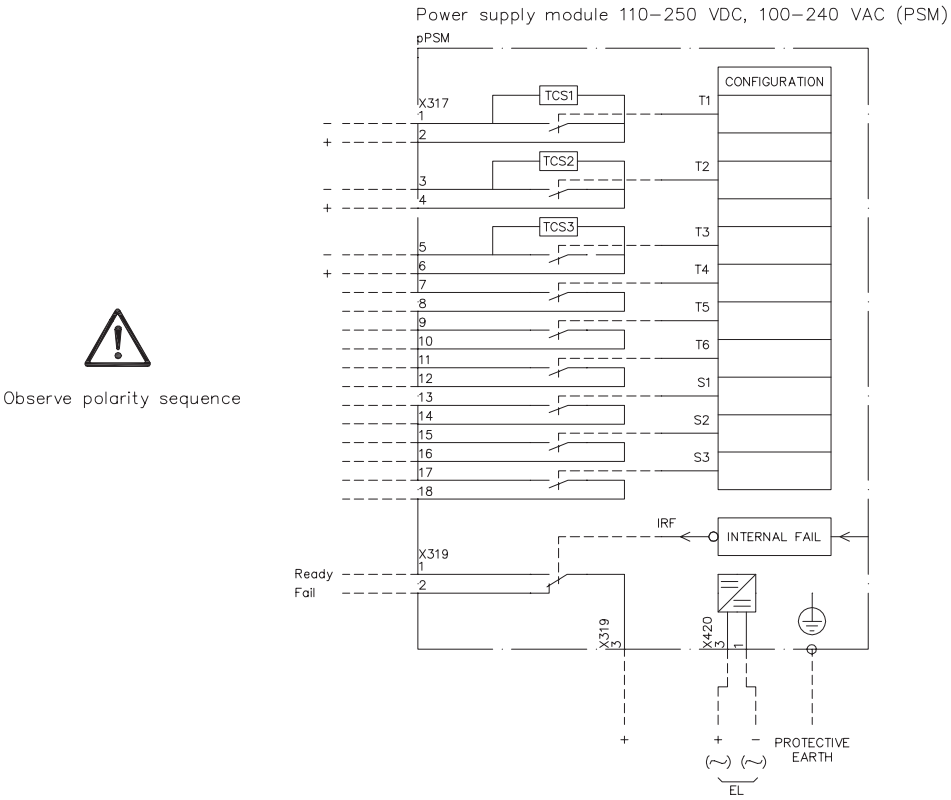

Figure 10. Power supply module (PSM) 110-250V DC, 100–240V AC

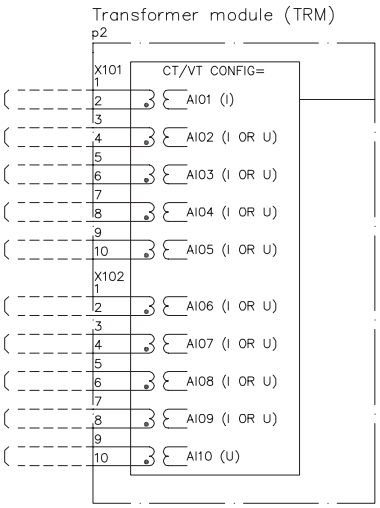

Designation corresponding to Transformer module				
CT/VT input designation	Current/voltage configuration			
	6I+4U	8I+2U	4I+1I+5U	4I+6U
AI01	**1/5A**	1/5A	1/5A	1/5A
AI02	1/5A	1/5A	1/5A	1/5A
AI03	1/5A	1/5A	1/5A	1/5A
AI04	1/5A	1/5A	1/5A	1/5A
AI05	1/5A	1/5A	0.1/0.5A	100–220V
AI06	1/5A	1/5A	100–220V	100–220V
AI07	100–220V	1/5A	100–220V	100–220V
AI08	100–220V	1/5A	100–220V	100–220V
AI09	100–220V	100–220V	100–220V	100–220V
AI10	100–220V	100–220V	100–220V	100–220V

Compression or ringlug terminals

- Indicates high polarity. Note that internal polarity can be adjusted by setting of analog input CT neutral direction and or on SMAI pre–processing function blocks.

Figure 11. Transformer module (TRM)

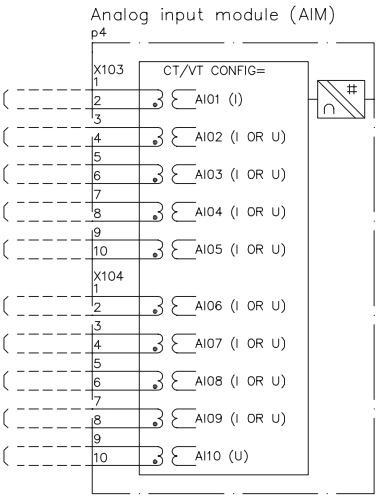

Designation corresponding to Analog input module		
CT/VT input designation	Current/voltage configuration	
	6I+4U	4I+1I+5U
AI01	1/5A	1/5A
AI02	1/5A	1/5A
AI03	1/5A	1/5A
AI04	1/5A	1/5A
AI05	1/5A	0.1/0.5A
AI06	1/5A	100–220V
AI07	100–220V	100–220V
AI08	100–220V	100–220V
AI09	100–220V	100–220V
AI10	100–220V	100–220V

Compression or ringlug terminals

- Indicates high polarity. Note that internal polarity can be adjusted by setting of analog input CT neutral direction and or on SMAI pre–processing function blocks.

Figure 12. Analog input (AIM)

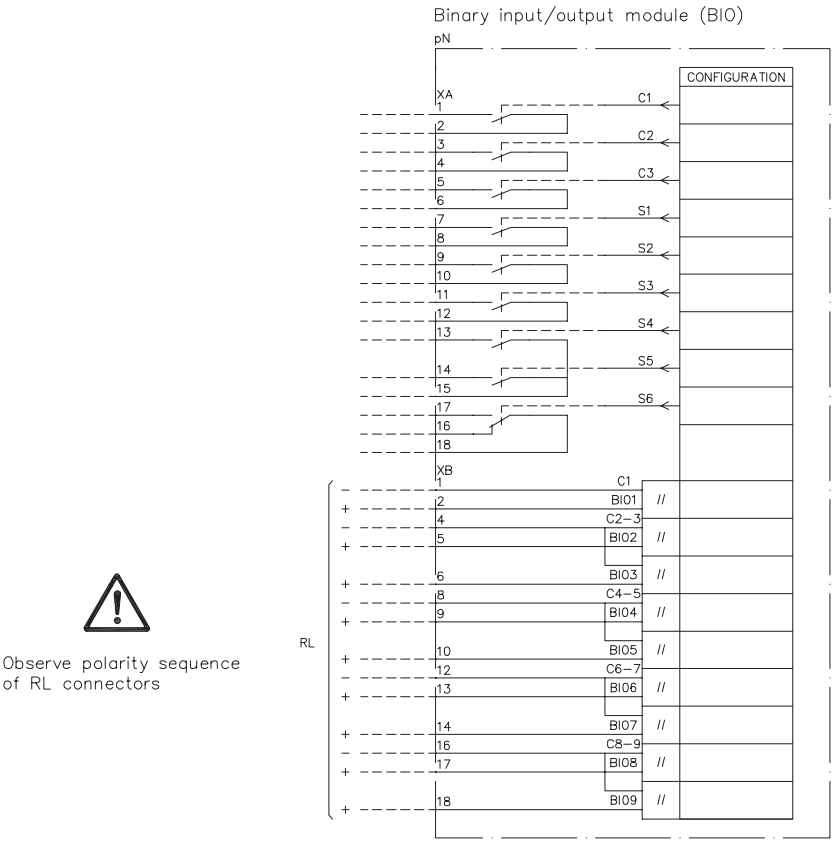

Designation in correspondance to the local in the rack		
pN=	XA=	XB=
p3	X321	X324
p4	X326	X329
p5	X331	X334
p6	X336	X339

Figure 13. Binary input/output (BIO) option

17. Connection diagrams Configured

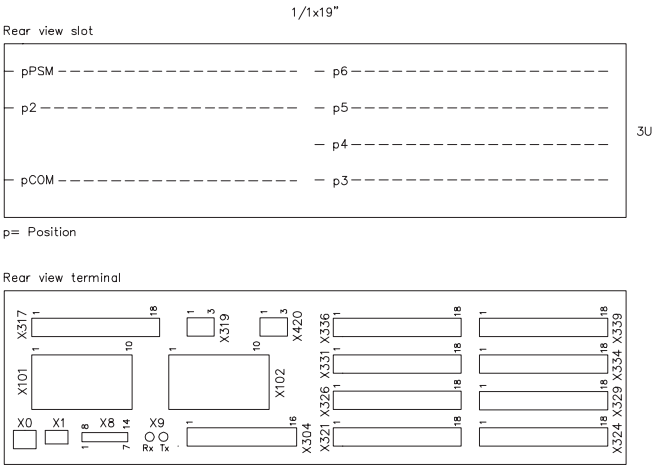

Designation for 3U, 1/1x19" casing with 1 TRM

Module	Slot	Terminal
COM	pCOM	X0, X1, X8, X9, X304
TRM	p2	X101, X102
PSM	pPSM	X317. X319, X420
BIO	p3	X321, X324
BIO	p4	X326, X329
BIO	p5	X331, X334
BIO	p6	X336, X339

Figure 14. Designation for 3U, 1/1x19" casing with 1 TRM

Connection diagrams for REQ650 A01

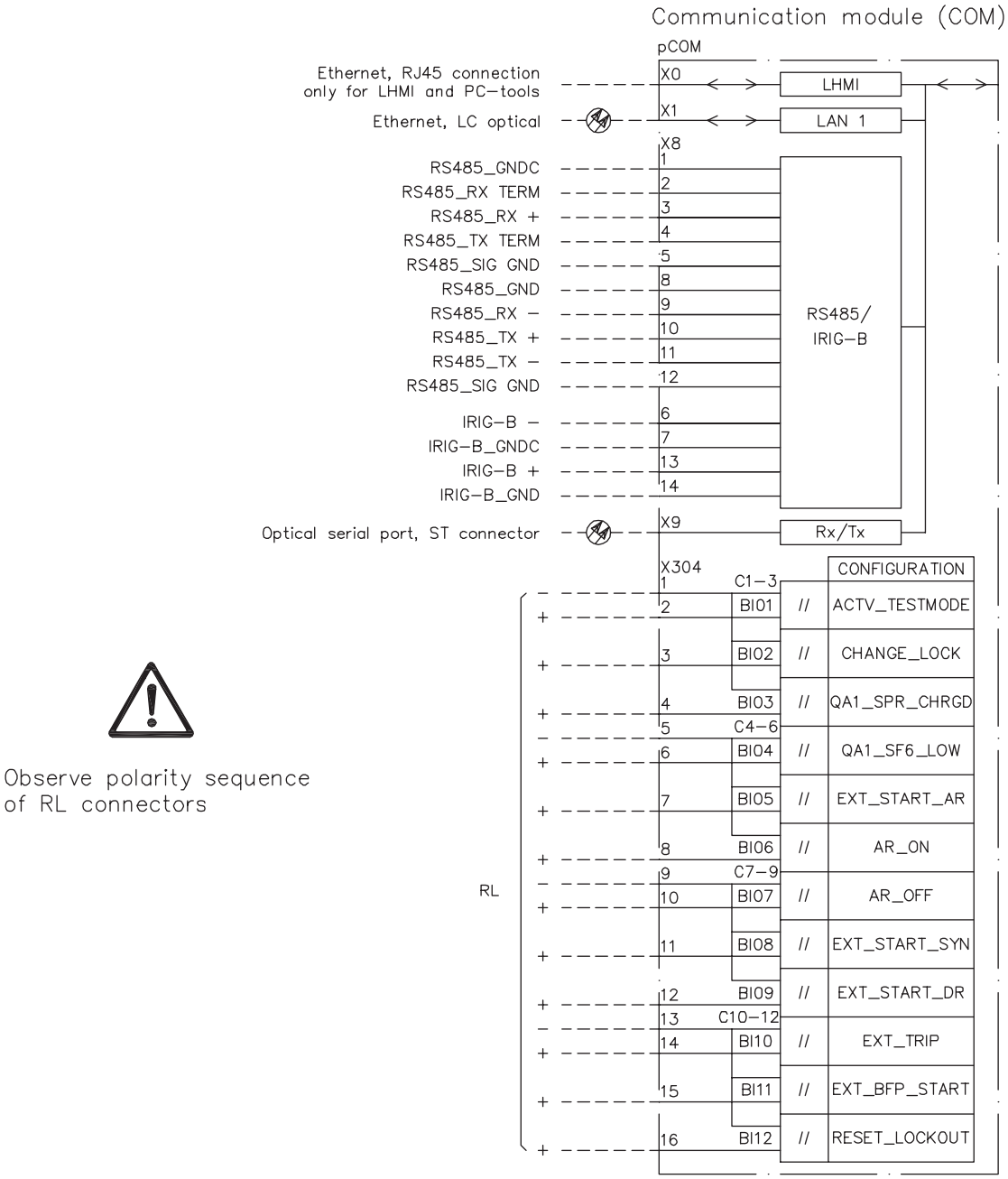

Figure 15. Communication module (COM)

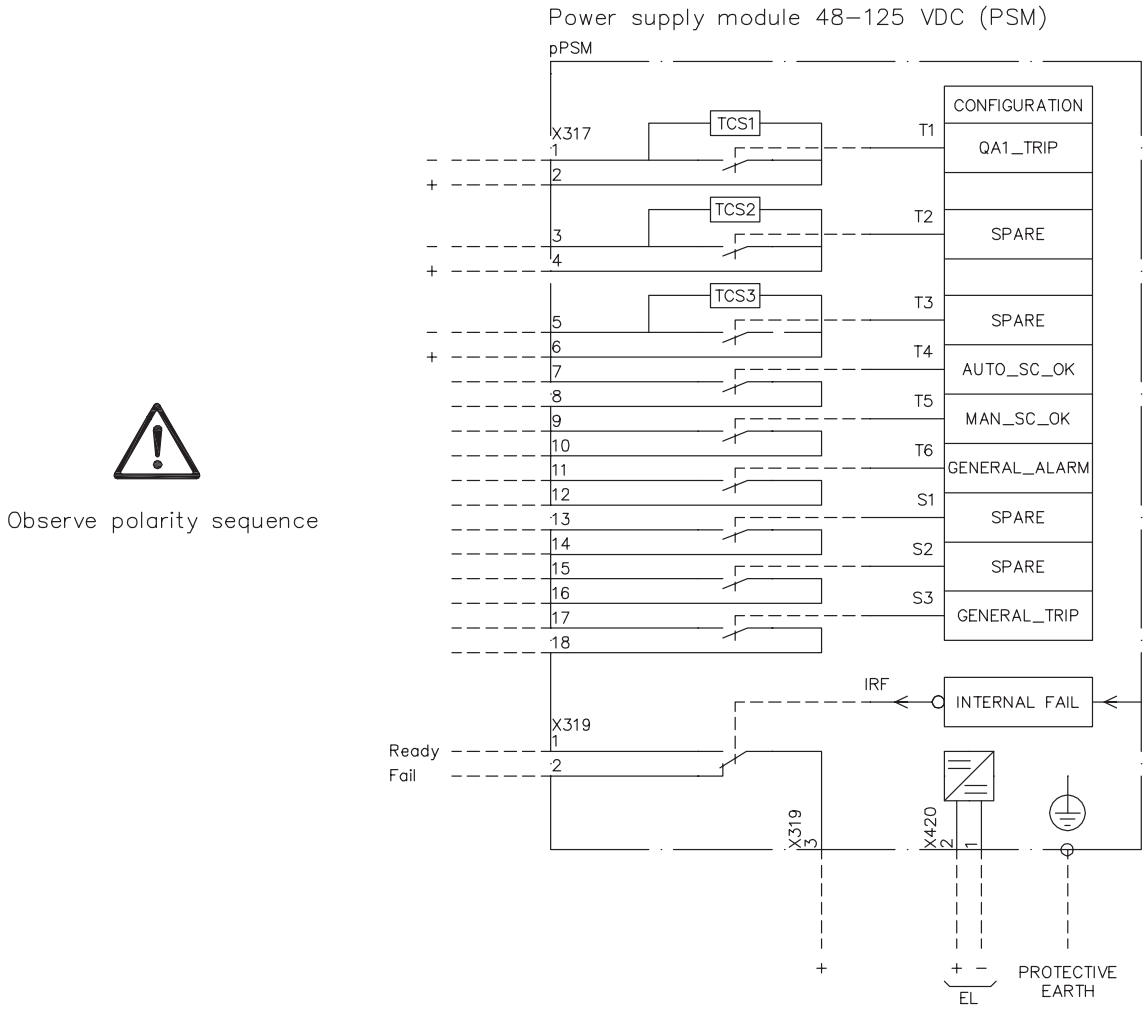

Figure 16. Power supply module (PSM) 48-125V DC

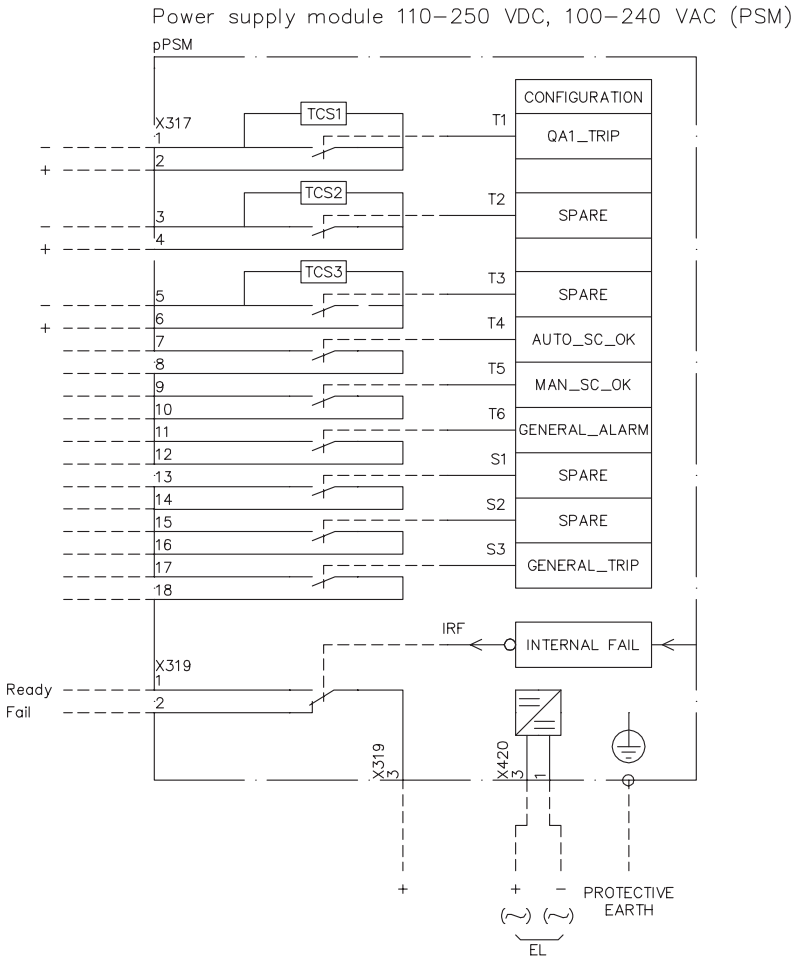

Observe polarity sequence

Figure 17. Power supply module (PSM), 110-250V DC, 100–240V AC

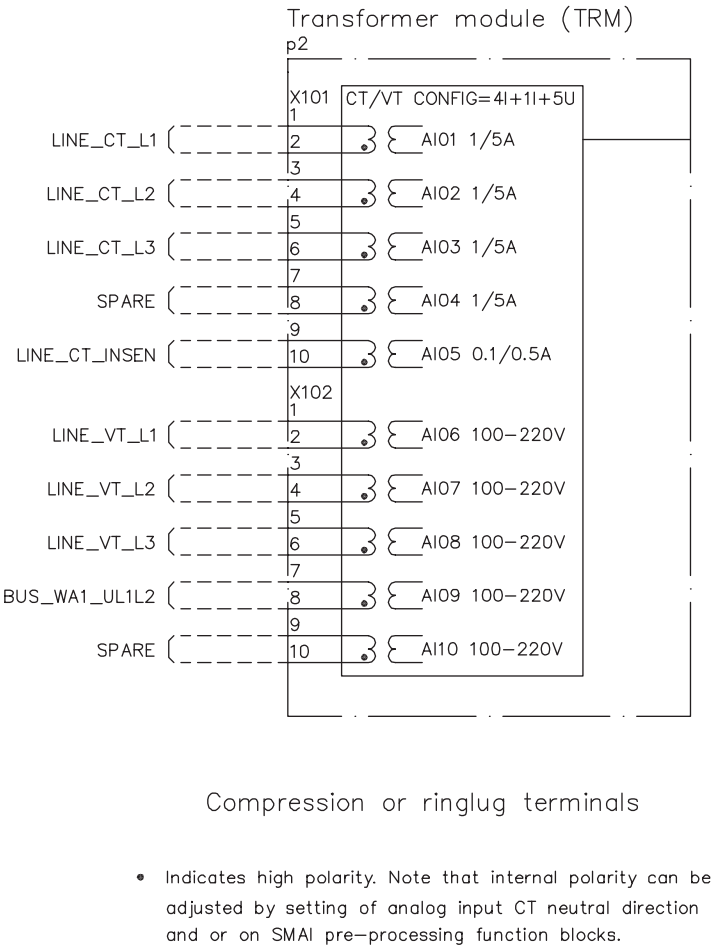

Figure 18. Transformer module (TRM)

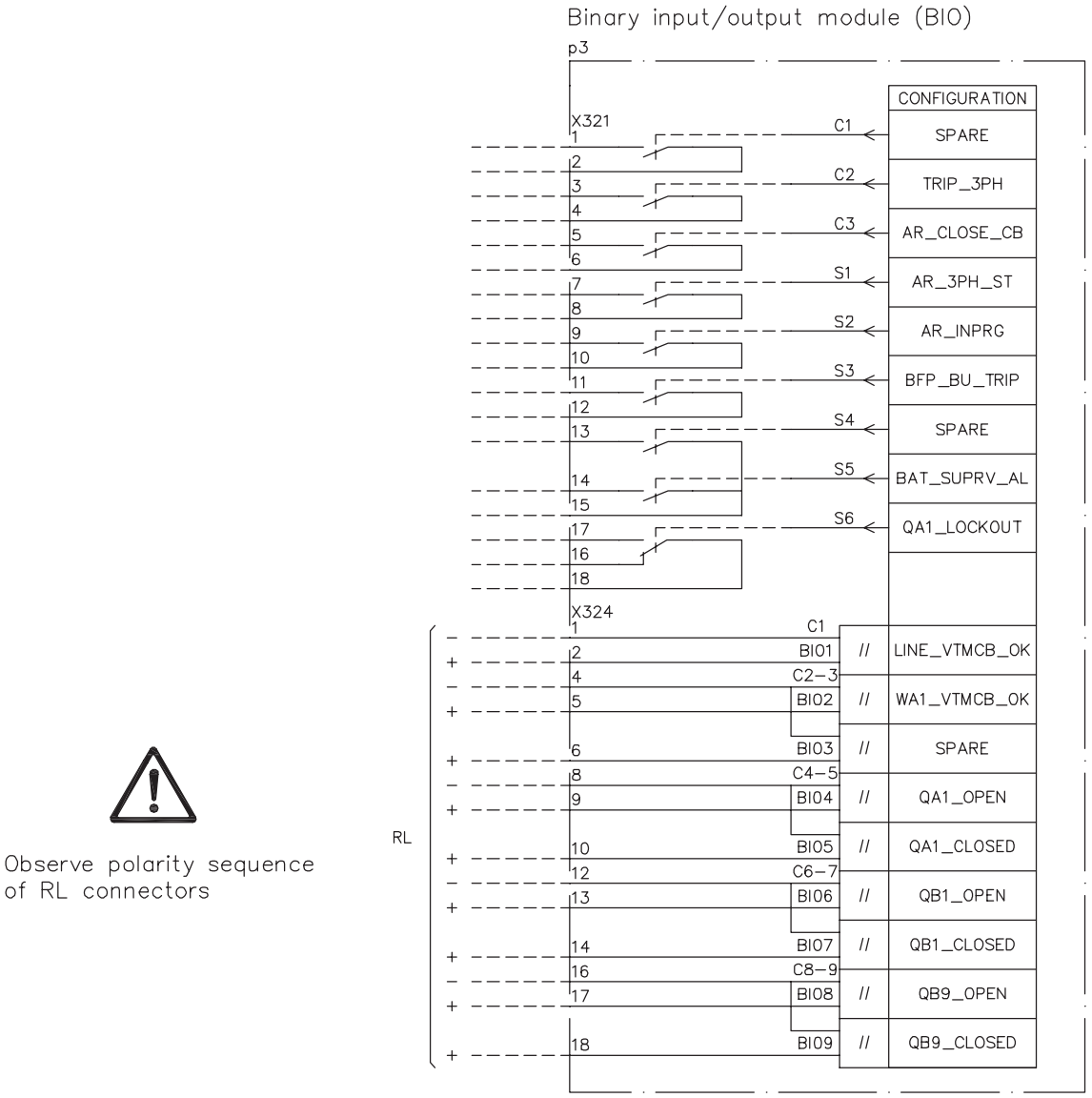

Figure 19. Binary input/output (BIO) option

Connection diagrams for REQ650 A11

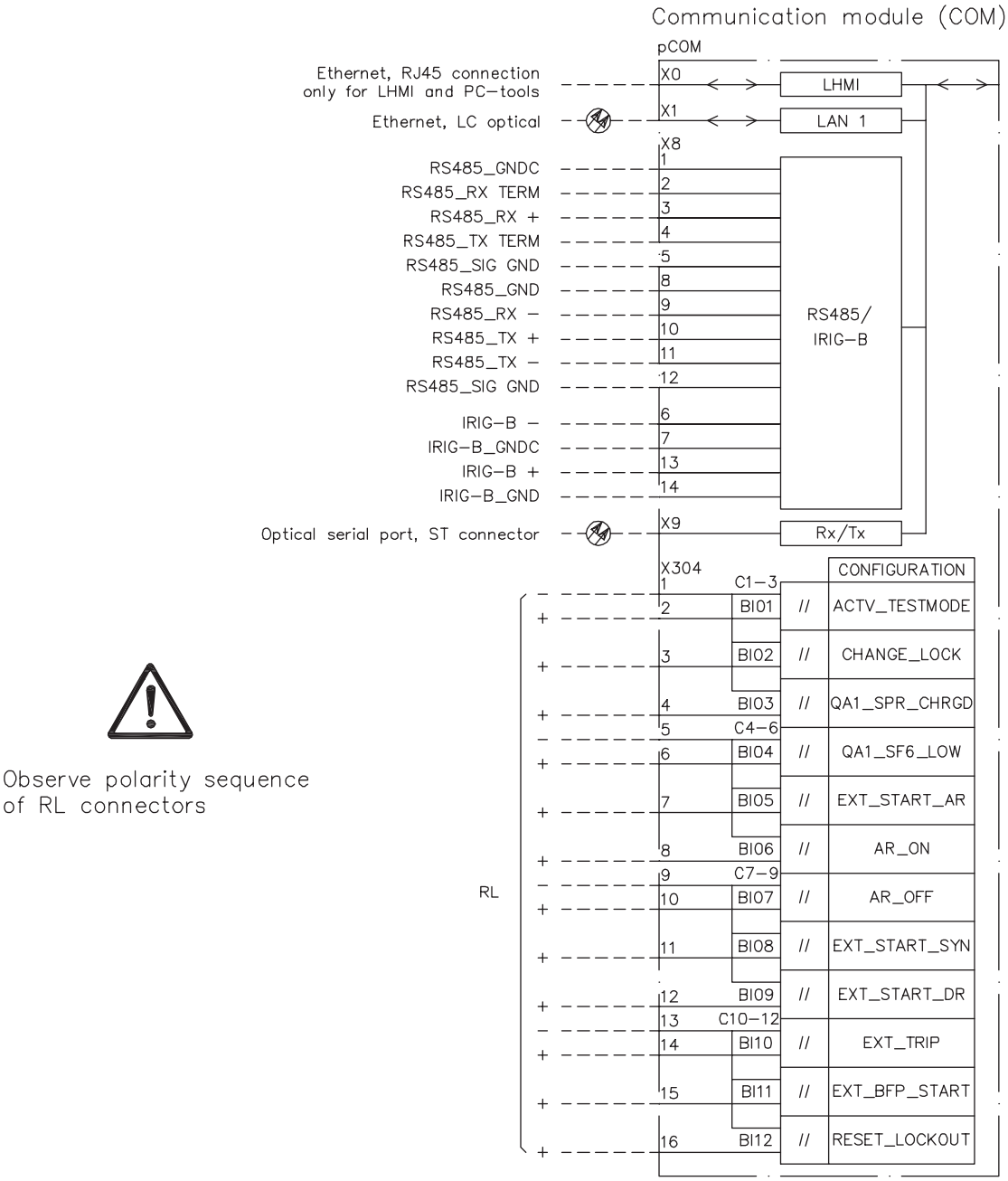

Figure 20. Communication module (COM)

Observe polarity sequence

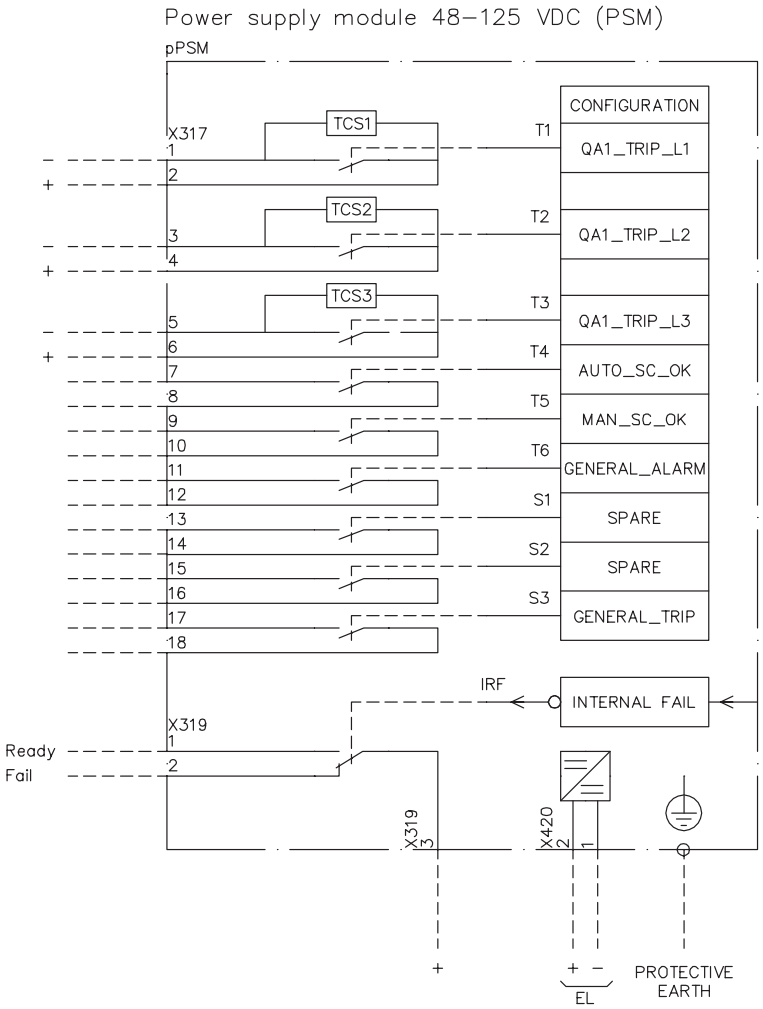

Figure 21. Power supply module (PSM) 48-125V DC

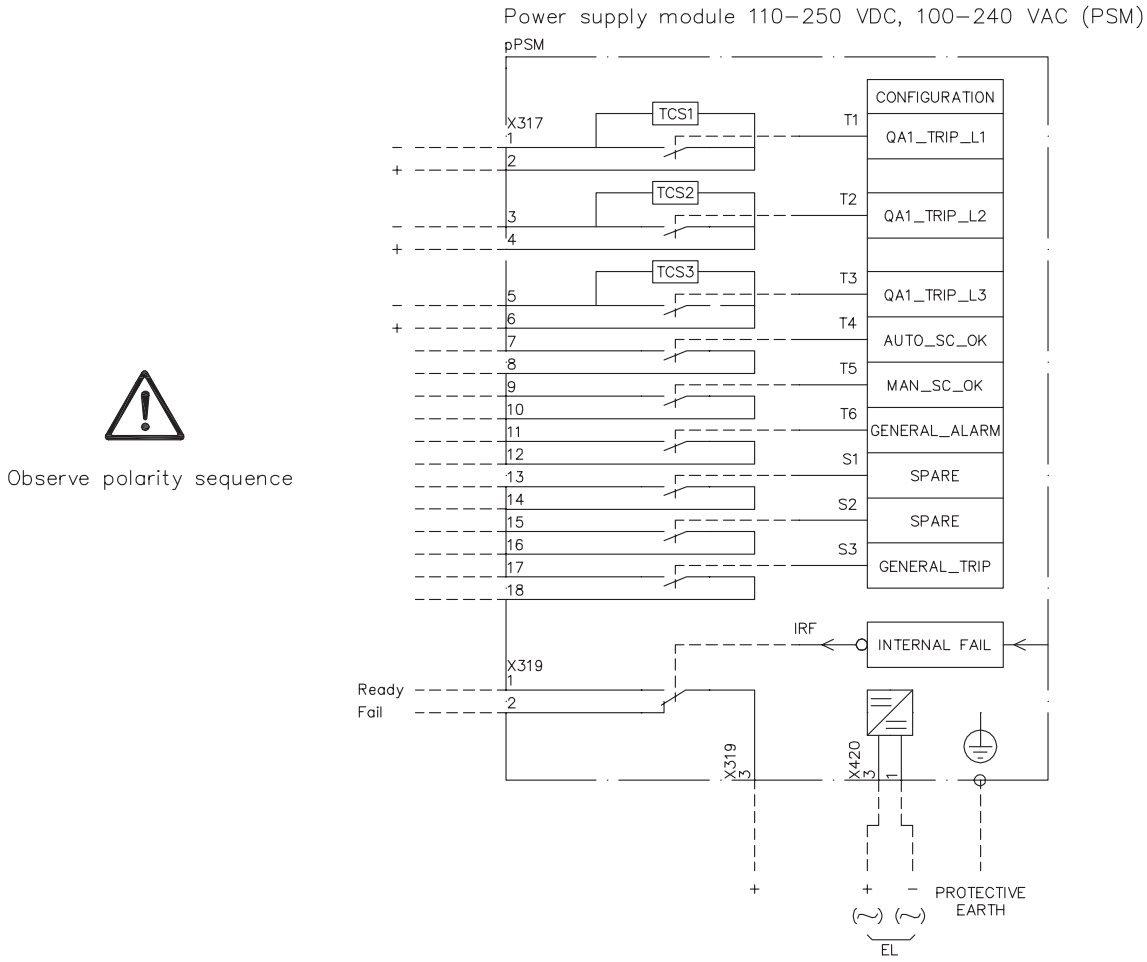

Figure 22. Power supply module (PSM), 110-250V DC, 100–240V AC

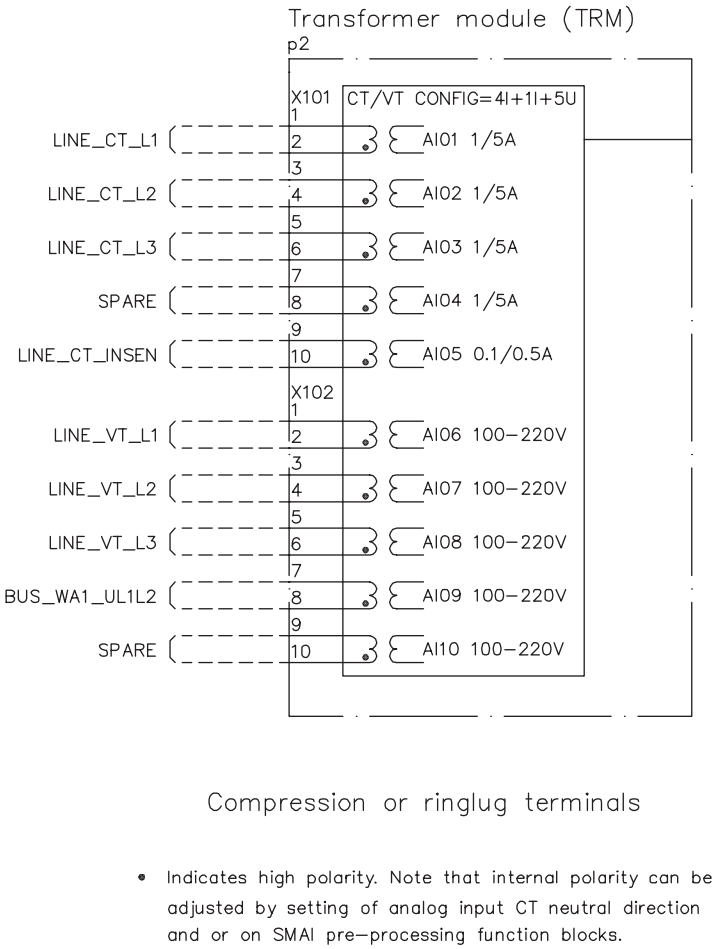

Figure 23. Transformer module (TRM)

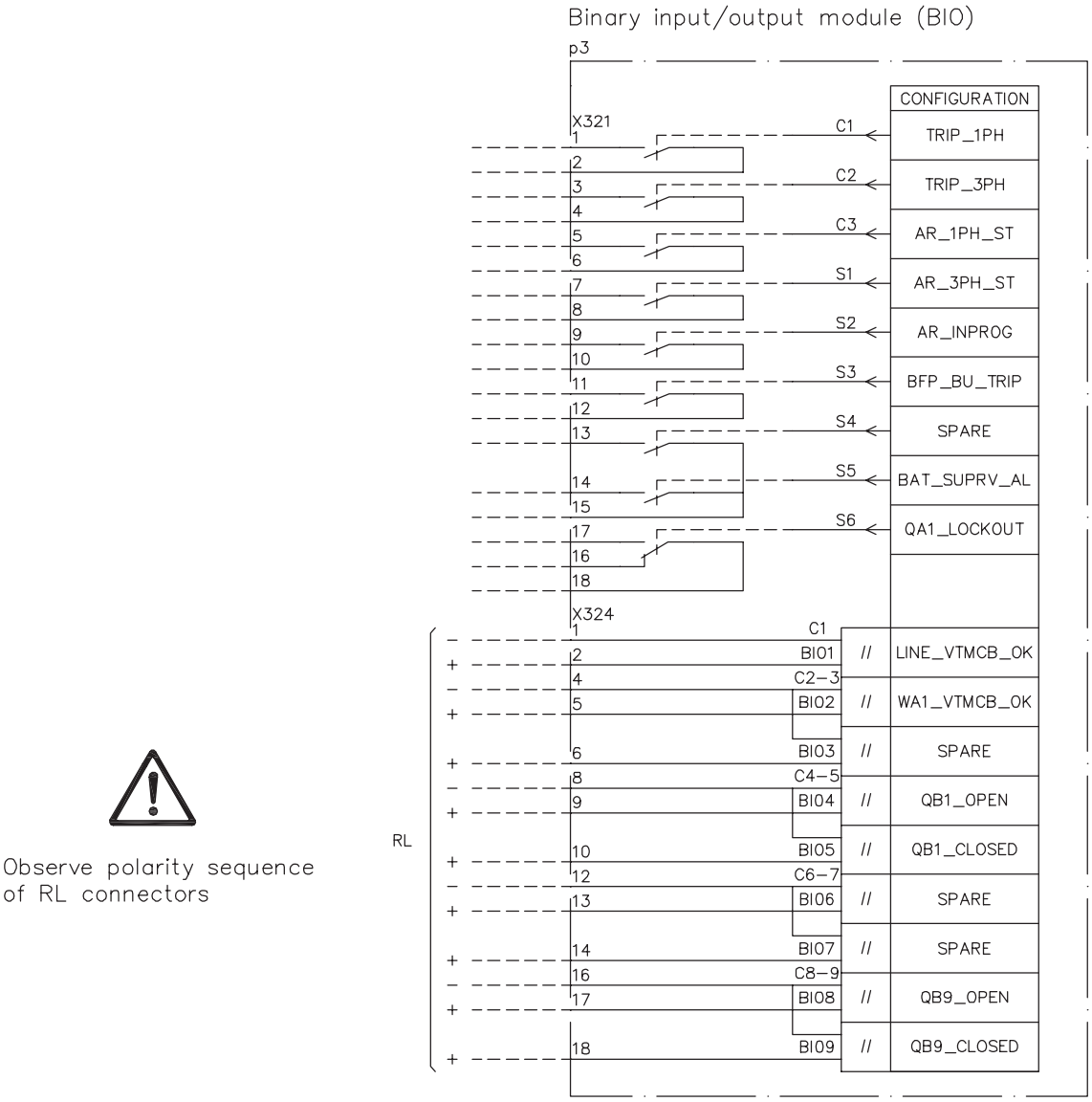

Figure 24. Binary input/output (BIO) option

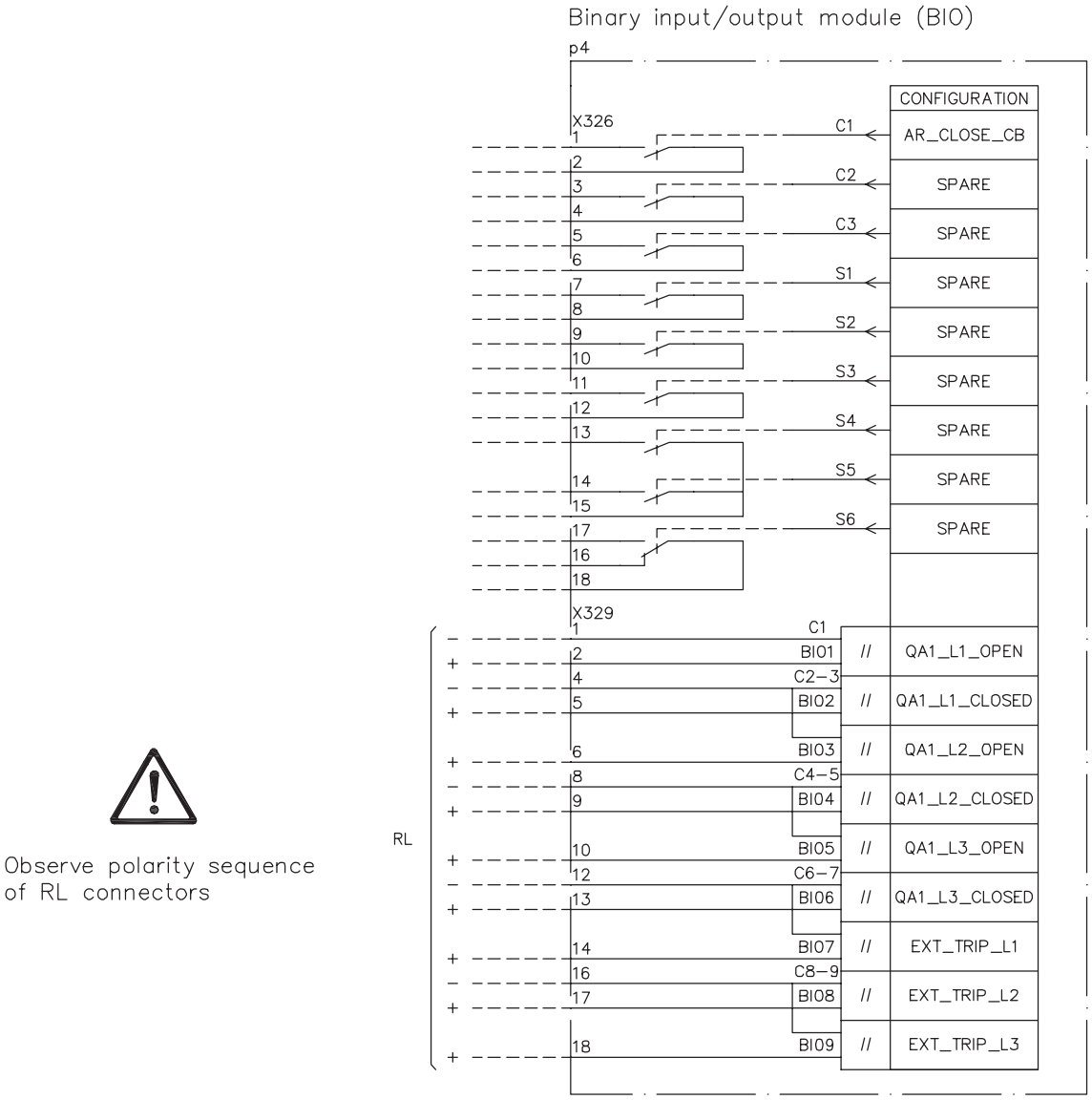

Figure 25. Binary input/output (BIO) option

Connection diagrams for REQ650 B11

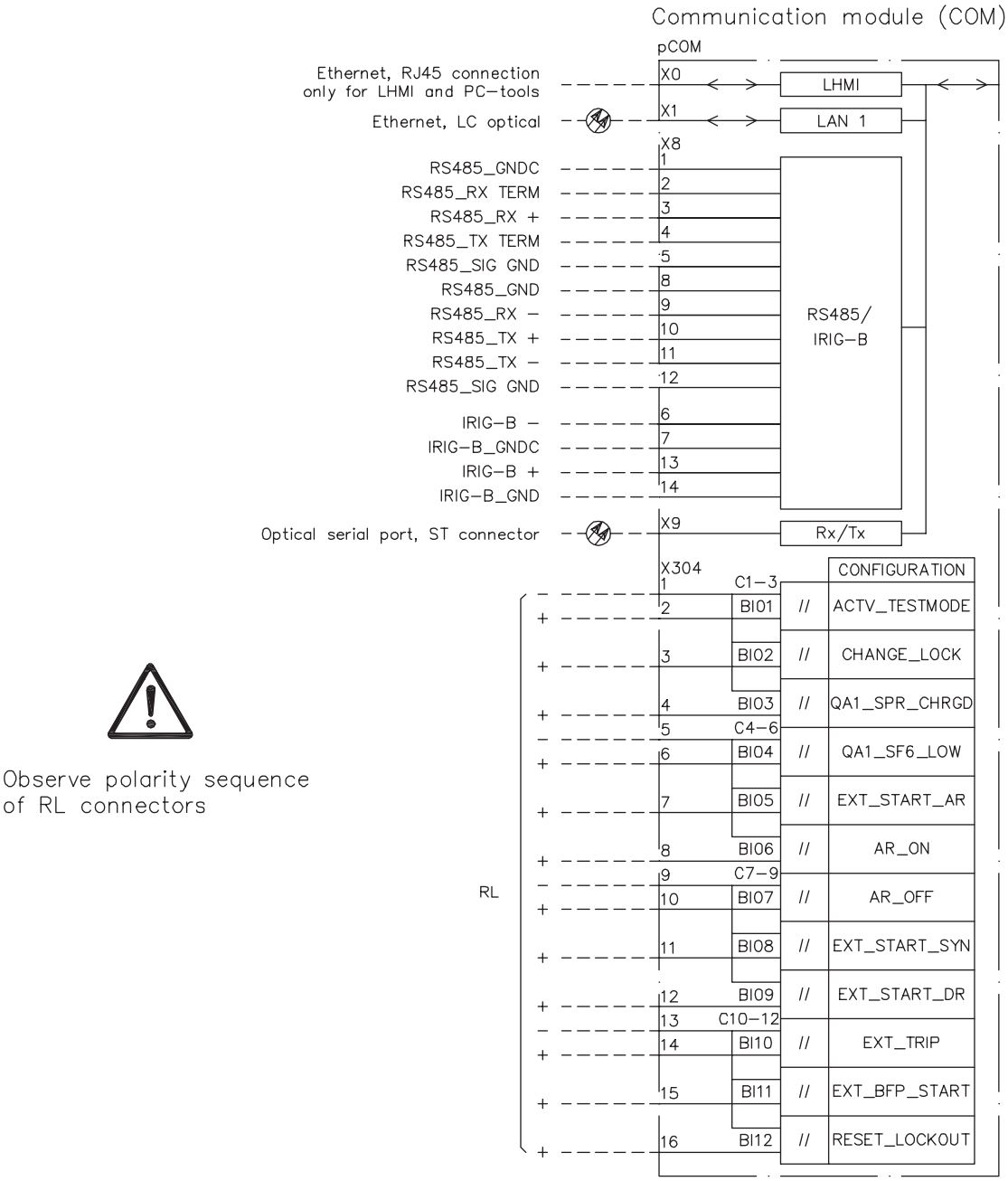

Figure 26. Communication module (COM)

Observe polarity sequence

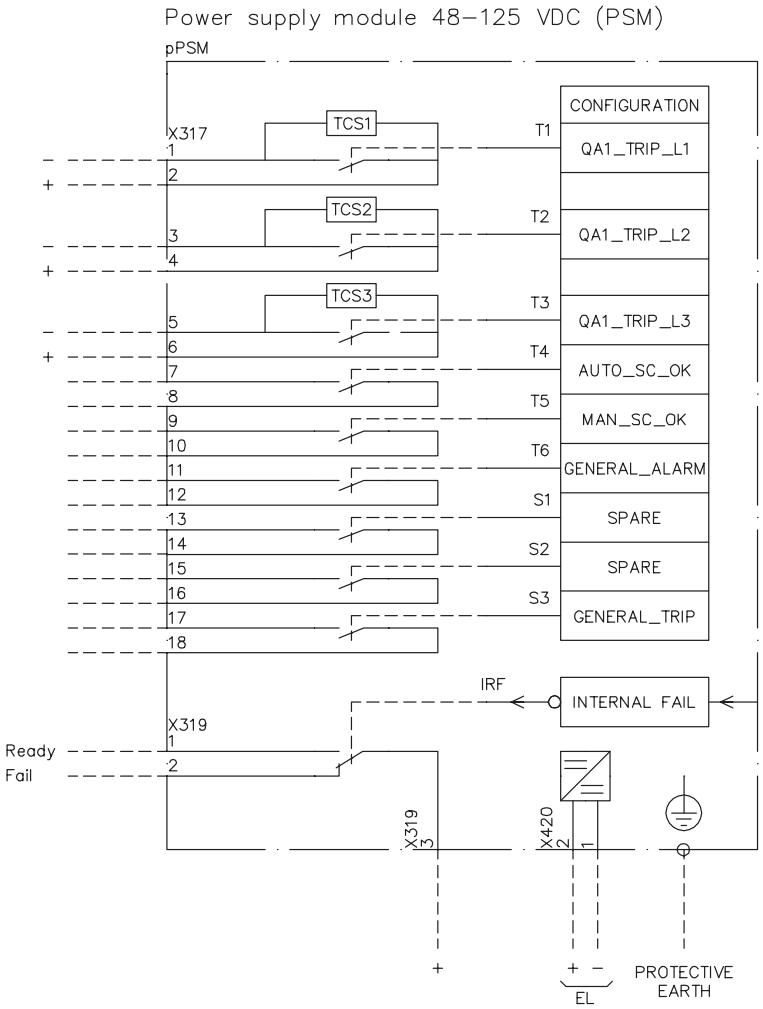

Figure 27. Power supply module (PSM) 48-125V DC

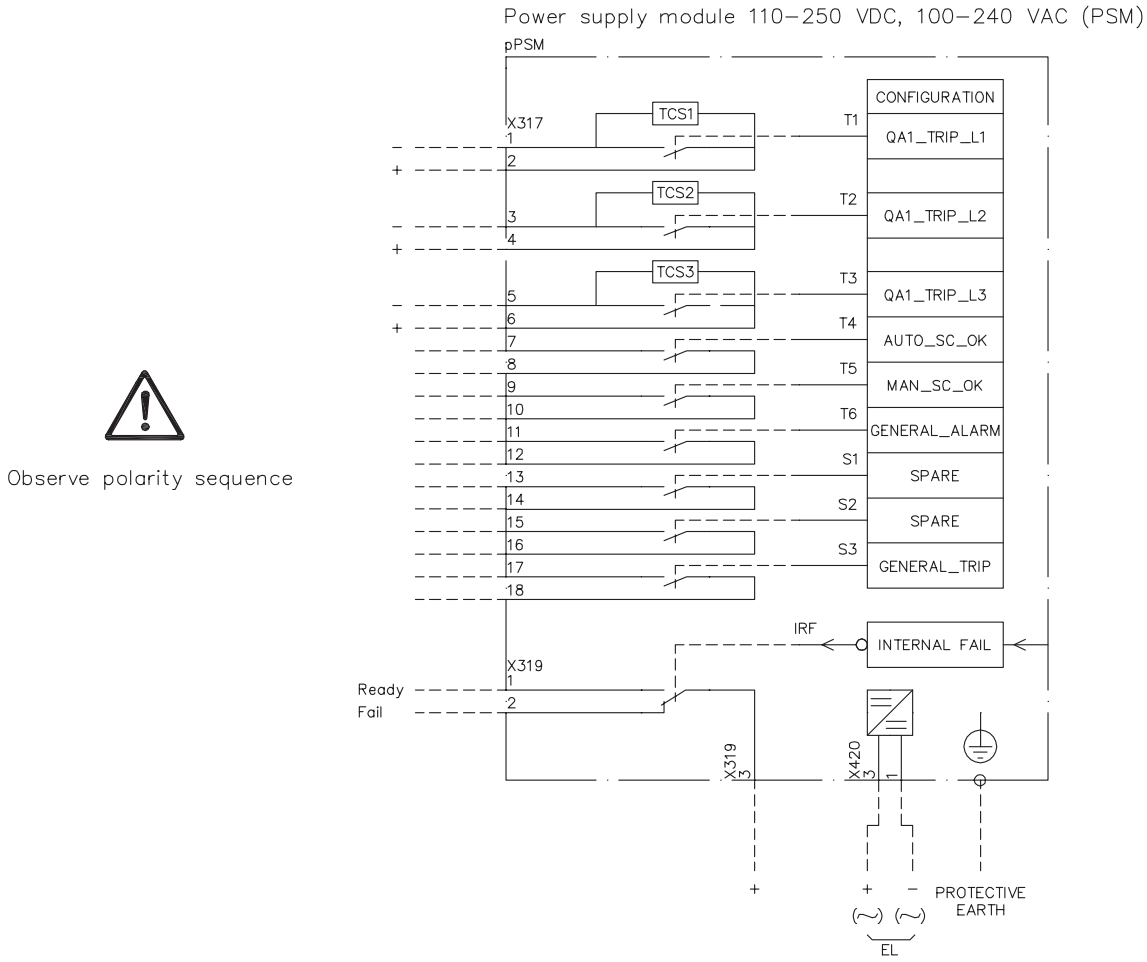

Figure 28. Power supply module (PSM), 110-250V DC, 100–240V AC

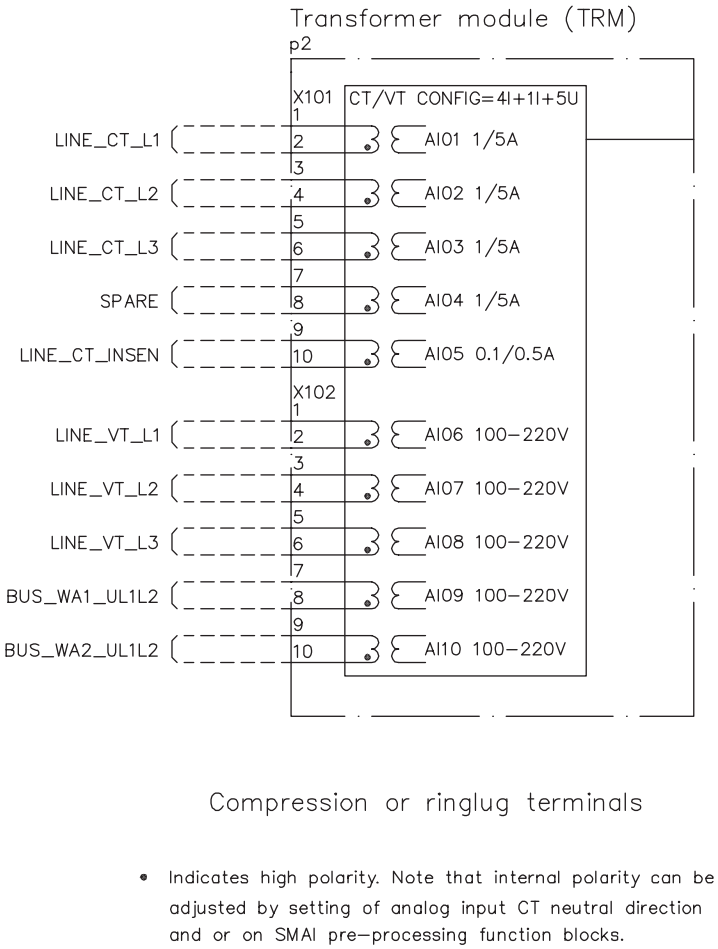

Figure 29. Transformer module (TRM)

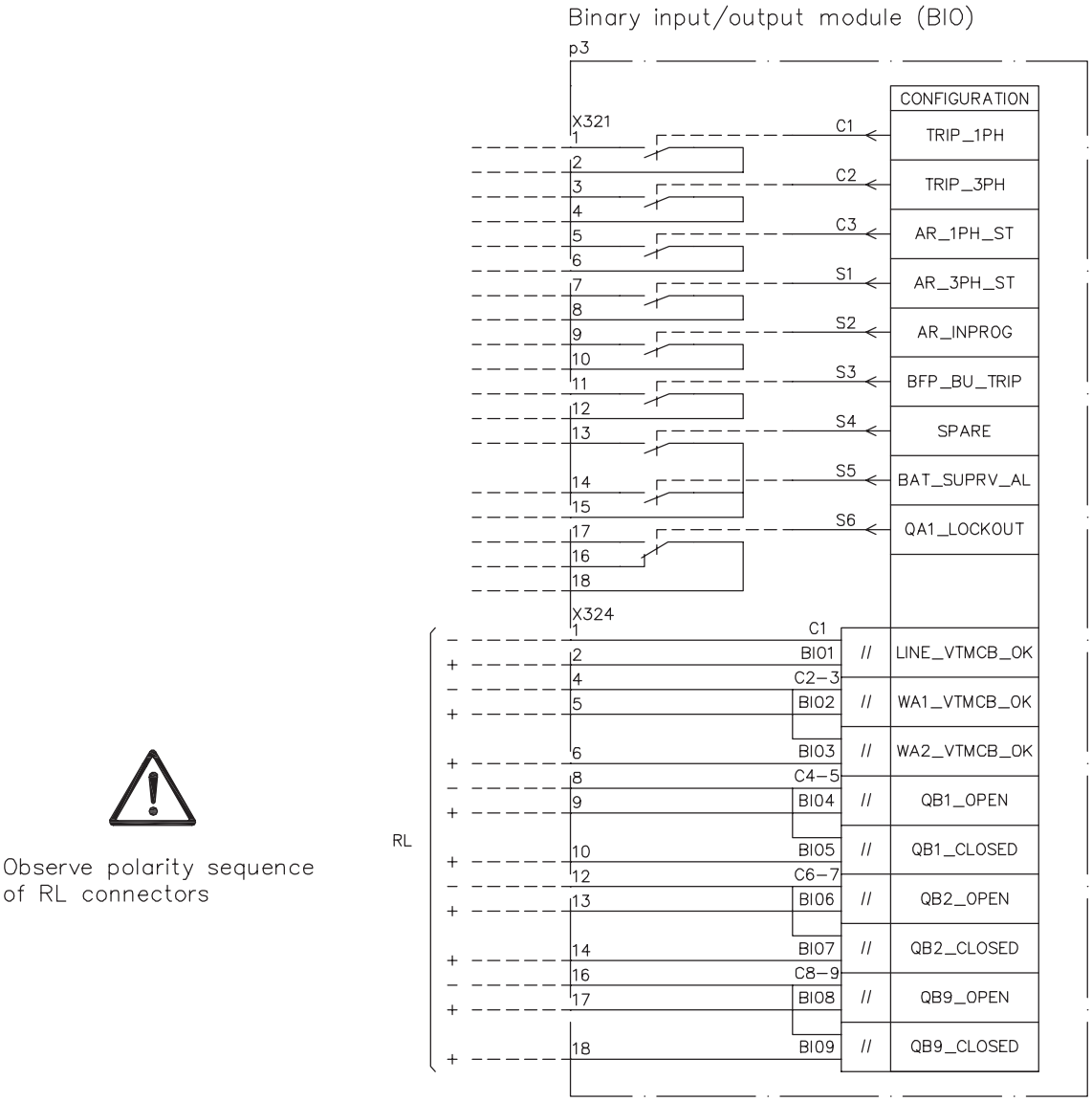

Figure 30. Binary input/output (BIO) option

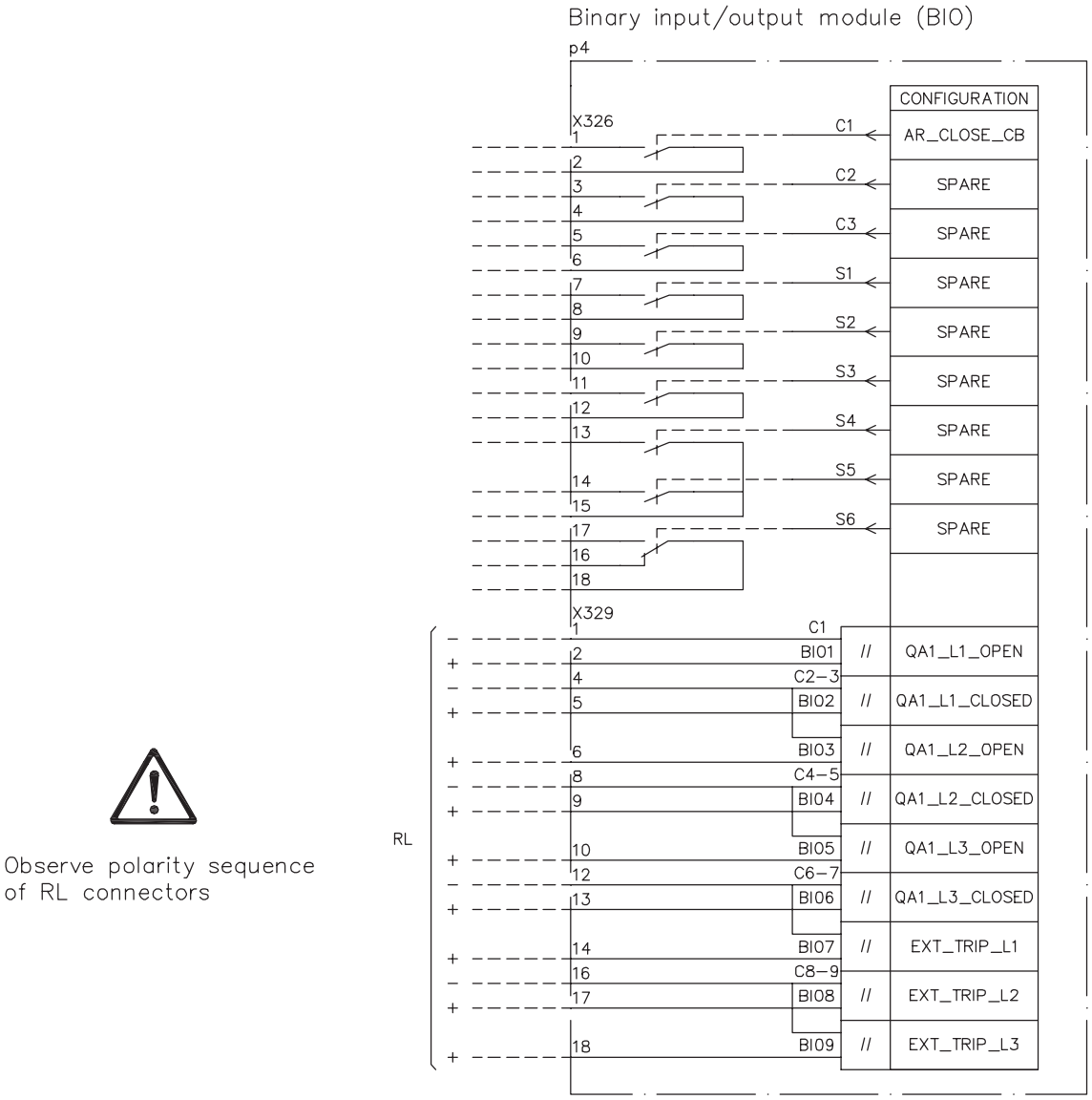

Figure 31. Binary input/output (BIO) option

18. Technical data

General

Definitions	
Reference value	The specified value of an influencing factor to which are referred the characteristics of the equipment
Nominal range	The range of values of an influencing quantity (factor) within which, under specified conditions, the equipment meets the specified requirements
Operative range	The range of values of a given energizing quantity for which the equipment, under specified conditions, is able to perform its intended functions according to the specified requirements

Energizing quantities, rated values and limits
Analog inputs

Table 2. Energizing inputs

Description		Value	
Rated frequency		50/60 Hz	
Operating range		Rated frequency ± 5 Hz	
Current inputs	Rated current, I_n	0.1/0.5 A[1)]	1/5 A[2)]
	Thermal withstand capability:		
	• Continuously	4 A	20 A
	• For 1 s	100 A	500 A *)
	• For 10 s	20 A	100 A
	Dynamic current withstand:		
	• Half-wave value	250 A	1250 A
	Input impedance	<100 mΩ	<20 mΩ
Voltage inputs	Rated voltage, U_n	100 V AC/ 110 V AC/ 115 V AC/ 120 V AC	
	Voltage withstand:		
	• Continuous	420 V rms	
	• For 10 s	450 V rms	
	Burden at rated voltage	<0.05 VA	
*) max. 350 A for 1 s when COMBITEST test switch is included.			

1) Residual current
2) Phase currents or residual current

Auxiliary AC and DC voltage

Table 3. Power supply

Description	600PSM02	600PSM03
U_{aux}nominal	48, 60, 110, 125 V DC	100, 110, 120, 220, 240 V AC, 50 and 60 Hz
		110, 125, 220, 250 V DC
U_{aux}variation	80...120% of U_n (38.4...150 V DC)	85...110% of U_n (85...264 V AC)
		80...120% of U_n (88...300 V DC)
Maximum load of auxiliary voltage supply	35 W for DC 40 W for AC	
Ripple in the DC auxiliary voltage	Max 15% of the DC value (at frequency of 100 and 120 Hz)	
Maximum interruption time in the auxiliary DC voltage without resetting the IED	50 ms at U_{aux}	

Binary inputs and outputs

Table 4. Binary inputs

Description	Value
Operating range	Maximum input voltage 300 V DC
Rated voltage	24...250 V DC
Current drain	1.6...1.8 mA
Power consumption/input	<0.38 W
Threshold voltage	15...221 V DC (parametrizable in the range in steps of 1% of the rated voltage)

Table 5. Signal output and IRF output

IRF relay change over - type signal output relay	
Description	**Value**
Rated voltage	250 V AC/DC
Continuous contact carry	5 A
Make and carry for 3.0 s	10 A
Make and carry 0.5 s	30 A
Breaking capacity when the control-circuit time constant L/R<40 ms, at U< 48/110/220 V DC	≤0.5 A/≤0.1 A/≤0.04 A

Table 6. Power output relays without TCS function

Description	Value
Rated voltage	250 V AC/DC
Continuous contact carry	8 A
Make and carry for 3.0 s	15 A
Make and carry for 0.5 s	30 A
Breaking capacity when the control-circuit time constant L/R<40 ms, at U< 48/110/220 V DC	≤1 A/≤0.3 A/≤0.1 A

Table 7. Power output relays with TCS function

Description	Value
Rated voltage	250 V DC
Continuous contact carry	8 A
Make and carry for 3.0 s	15 A
Make and carry for 0.5 s	30 A
Breaking capacity when the control-circuit time constant L/R<40 ms, at U< 48/110/220 V DC	≤1 A/≤0.3 A/≤0.1 A
Control voltage range	20...250 V DC
Current drain through the supervision circuit	~1.0 mA
Minimum voltage over the TCS contact	20 V DC

Table 8. Ethernet interfaces

Ethernet interface	Protocol	Cable	Data transfer rate
100BASE-TX	-	CAT 6 S/FTP or better	100 MBits/s
100BASE-FX	TCP/IP protocol	Fibre-optic cable with LC connector	100 MBits/s

Table 9. Fibre-optic communication link

Wave length	Fibre type	Connector	Permitted path attenuation[1)]	Distance
1300 nm	MM 62.5/125 µm glass fibre core	LC	<8 dB	2 km

1) Maximum allowed attenuation caused by connectors and cable together

Table 10. X8/IRIG-B and EIA-485 interface

Type	Protocol	Cable
Screw terminal, pin row header	IRIG-B	Shielded twisted pair cable Recommended: CAT 5, Belden RS-485 (9841- 9844) or Alpha Wire (Alpha 6222-6230)
Screw terminal, pin row header		Shielded twisted pair cable Recommended: DESCAFLEX RD-H(ST)H-2x2x0.22mm^2, Belden 9729, Belden 9829

Table 11. IRIG-B

Type	Value	Accuracy
Input impedance	430 Ohm	—
Minimum input voltage HIGH	4.3 V	—
Maximum input voltage LOW	0.8 V	—

Table 12. EIA-485 interface

Type	Value	Conditions
Minimum differential driver output voltage	1.5 V	—
Maximum output current	60 mA	—
Minimum differential receiver input voltage	0.2 V	—
Supported bit rates	300, 600, 1200, 2400, 4800, 9600, 19200, 38400, 57600, 115200	—
Maximum number of 650 IEDs supported on the same bus	32	—
Max. cable length	925 m (3000 ft)	Cable: AWG24 or better, stub lines shall be avoided

Table 13. Serial rear interface

Type	Counter connector
Serial port (X9)	Optical serial port, type ST for IEC 60870-5-103 and DNP serial

Table 14. Optical serial port (X9)

Wave length	Fibre type	Connector	Permitted path attenuation[1)]
820 nm	MM 62,5/125 µm glass fibre core	ST	6.8 dB (approx. 1700m length with 4 db / km fibre attenuation)
820 nm	MM 50/125 µm glass fibre core	ST	2.4 dB (approx. 600m length with 4 db / km fibre attenuation)

1) Maximum allowed attenuation caused by fibre

Influencing factors

Table 15. Degree of protection of rack-mounted IED

Description	Value
Front side	IP 40
Rear side, connection terminals	IP 20

Table 16. Degree of protection of the LHMI

Description	Value
Front and side	IP40

Table 17. Environmental conditions

Description	Value
Operating temperature range	-25...+55ºC (continuous)
Short-time service temperature range	-40...+70ºC (<16h) Note: Degradation in MTBF and HMI performance outside the temperature range of -25...+55ºC
Relative humidity	<93%, non-condensing
Atmospheric pressure	86...106 kPa
Altitude	up to 2000 m
Transport and storage temperature range	-40...+85ºC

Table 18. Environmental tests

Description		Type test value	Reference
Cold tests	operation	96 h at -25ºC 16 h at -40ºC	IEC 60068-2-1/ANSI C37.90-2005 (chapter 4)
	storage	96 h at -40ºC	
Dry heat tests	operation	16 h at +70ºC	IEC 60068-2-2/ANSI C37.90-2005 (chapter 4)
	storage	96 h at +85ºC	
Damp heat tests	steady state	240 h at +40ºC humidity 93%	IEC 60068-2-78
	cyclic	6 cycles at +25 to +55ºC humidity 93...95%	IEC 60068-2-30

Type tests according to standards

Table 19. Electromagnetic compatibility tests

Description	Type test value	Reference
100 kHz and 1 MHz burst disturbance test		IEC 61000-4-18, level 3 IEC 60255-22-1 ANSI C37.90.1-2002
• Common mode	2.5 kV	
• Differential mode	2.5 kV	
Electrostatic discharge test		IEC 61000-4-2, level 4 IEC 60255-22-2 ANSI C37.90.3-2001
• Contact discharge	8 kV	
• Air discharge	15 kV	
Radio frequency interference tests		
• Conducted, common mode	10 V (emf), f=150 kHz...80 MHz	IEC 61000-4-6 , level 3 IEC 60255-22-6
• Radiated, amplitude-modulated	20 V/m (rms), f=80...1000 MHz and f=1.4...2.7 GHz	IEC 61000-4-3, level 3 IEC 60255-22-3 ANSI C37.90.2-2004
Fast transient disturbance tests		IEC 61000-4-4 IEC 60255-22-4, class A ANSI C37.90.1-2002
• Communication ports	4 kV	
• Other ports	4 kV	
Surge immunity test		IEC 61000-4-5, level 3/2 IEC 60255-22-5
• Communication	1 kV line-to-earth	
• Other ports	2 kV line-to-earth, 1 kV line-to-line	
Power frequency (50 Hz) magnetic field		IEC 61000-4-8, level 5
• 3 s	1000 A/m	
• Continuous	100 A/m	
Pulse magnetic field immunity test	1000A/m	IEC 61000–4–9, level 5
Power frequency immunity test		IEC 60255-22-7, class A IEC 61000-4-16
• Common mode	300 V rms	
• Differential mode	150 V rms	

Table 19. Electromagnetic compatibility tests, continued

Description	Type test value	Reference
Voltage dips and short interruptionsc on DC power supply	Dips: 40%/200 ms 70%/500 ms Interruptions: 0-50 ms: No restart 0...∞ s : Correct behaviour at power down	IEC 60255-11 IEC 61000-4-11
Voltage dips and interruptions on AC power supply	Dips: 40% 10/12 cycles at 50/60 Hz 70% 25/30 cycles at 50/60 Hz Interruptions: 0–50 ms: No restart 0...∞ s: Correct behaviour at power down	IEC 60255–11 IEC 61000–4–11
Electromagnetic emission tests		EN 55011, class A IEC 60255-25
• Conducted, RF-emission (mains terminal)		
0.15...0.50 MHz	< 79 dB(µV) quasi peak < 66 dB(µV) average	
0.5...30 MHz	< 73 dB(µV) quasi peak < 60 dB(µV) average	
• Radiated RF-emission		
30...230 MHz	< 40 dB(µV/m) quasi peak, measured at 10 m distance	
230...1000 MHz	< 47 dB(µV/m) quasi peak, measured at 10 m distance	

Table 20. Insulation tests

Description	Type test value	Reference
Dielectric tests:		IEC 60255-5 ANSI C37.90-2005
• Test voltage	2 kV, 50 Hz, 1 min 1 kV, 50 Hz, 1 min, communication	
Impulse voltage test:		IEC 60255-5 ANSI C37.90-2005
• Test voltage	5 kV, unipolar impulses, waveform 1.2/50 µs, source energy 0.5 J 1 kV, unipolar impulses, waveform 1.2/50 µs, source energy 0.5 J, communication	
Insulation resistance measurements		IEC 60255-5 ANSI C37.90-2005
• Isolation resistance	>100 MΩ, 500 V DC	
Protective bonding resistance		IEC 60255-27
• Resistance	<0.1 Ω (60 s)	

Table 21. Mechanical tests

Description	Reference	Requirement
Vibration response tests (sinusoidal)	IEC 60255-21-1	Class 2
Vibration endurance test	IEC60255-21-1	Class 1
Shock response test	IEC 60255-21-2	Class 1
Shock withstand test	IEC 60255-21-2	Class 1
Bump test	IEC 60255-21-2	Class 1
Seismic test	IEC 60255-21-3	Class 2

Product safety

Table 22. Product safety

Description	Reference
LV directive	2006/95/EC
Standard	EN 60255-27 (2005)

EMC compliance

Table 23. EMC compliance

Description	Reference
EMC directive	2004/108/EC
Standard	EN 50263 (2000) EN 60255-26 (2007)

Current protection

Table 24. Instantaneous phase overcurrent protection, 3-phase output PHPIOC

Function	Range or value	Accuracy
Operate current	(5-2500)% of IBase	± 1.0% of I_r at $I \leq I_r$ ± 1.0% of I at $I > I_r$
Reset ratio	> 95%	-
Operate time	20 ms typically at 0 to 2 x I_{set}	-
Reset time	30 ms typically at 2 to 0 x I_{set}	-
Critical impulse time	10 ms typically at 0 to 2 x I_{set}	-
Operate time	10 ms typically at 0 to 5 x I_{set}	-
Reset time	40 ms typically at 5 to 0 x I_{set}	-
Critical impulse time	2 ms typically at 0 to 5 x I_{set}	-
Dynamic overreach	< 5% at τ = 100 ms	-

Table 25. Instantaneous phase overcurrent protection, phase segregated output SPTPIOC

Function	Range or value	Accuracy
Operate current	(5-2500)% of IBase	± 1.0% of I_r at $I \leq I_r$ ± 1.0% of I at $I > I_r$
Reset ratio	> 95%	-
Operate time	20 ms typically at 0 to 2 x I_{set}	-
Reset time	30 ms typically at 2 to 0 x I_{set}	-
Critical impulse time	10 ms typically at 0 to 2 x I_{set}	-
Operate time	10 ms typically at 0 to 5 x I_{set}	-
Reset time	40 ms typically at 5 to 0 x I_{set}	-
Critical impulse time	2 ms typically at 0 to 5 x I_{set}	-
Dynamic overreach	< 5% at τ = 100 ms	-

Table 26. Four step phase overcurrent protection, 3-phase output OC4PTOC

Function	Setting range	Accuracy
Operate current	(5-2500)% of *IBase*	± 1.0% of I_r at $I \le I_r$ ± 1.0% of I at $I > I_r$
Reset ratio	> 95%	-
Min. operating current	(1-10000)% of *IBase*	± 1.0% of I_r at $I \le I_r$ ±1.0% of I at $I > I_r$
2nd harmonic blocking	(5–100)% of fundamental	± 2.0% of I_r
Independent time delay	(0.000-60.000) s	± 0.5% ±25 ms
Minimum operate time for inverse characteristics	(0.000-60.000) s	± 0.5% ±25 ms
Inverse characteristics, see table 73, table 74 and table 75	17 curve types	[1] ANSI/IEEE C37.112 IEC 60255–151 ±3% or ±40 ms $0.10 \le k \le 3.00$ $1.5 \times I_{set} \le I \le 20 \times I_{set}$
Operate time, nondirectional start function	25 ms typically at 0 to 2 x I_{set}	-
Reset time, nondirectional start function	30 ms typically at 2 to 0 x I_{set}	-
Operate time, directional start function	50 ms typically at 0 to 2 x I_{set}	-
Reset time, directional start function	35 ms typically at 2 to 0 x I_{set}	-
Critical impulse time	10 ms typically at 0 to 2 x I_{set}	-
Impulse margin time	15 ms typically	-

[1] **Note:** Timing accuracy only valid when 2nd harmonic blocking is turned off

Table 27. Four step phase overcurrent protection, phase segregated output OC4SPTOC

Function	Setting range	Accuracy
Operate current	(5-2500)% of *IBase*	± 1.0% of I_r at $I \leq I_r$ ± 1.0% of I at $I > I_r$
Reset ratio	> 95%	-
Min. operating current	(1-10000)% of *IBase*	± 1.0% of I_r at $I < I_r$ ±1.0% of I at $I > I_r$
Independent time delay	(0.000-60.000) s	± 0.5% ± 25 ms
Minimum operate time for inverse characteristics	(0.000-60.000) s	± 0.5% ± 25 ms
Inverse characteristics, see table 73, table 74 and table 75	17 curve types	[1] ANSI/IEEE C37.112 IEC 60255–151 ±3% or ±40 ms $0.10 \leq k \leq 3.00$ $1.5 \times I_{set} \leq I \leq 20 \times I_{set}$
Operate time, nondirectional start function	25 ms typically at 0 to 2 x I_{set}	-
Reset time, nondirectional start function	30 ms typically at 2 to 0 x I_{set}	-
Operate time, directional start function	50 ms typically at 0 to 2 x I_{set}	-
Reset time, directional start function	35 ms typically at 2 to 0 x I_{set}	-
Critical impulse time	10 ms typically at 0 to 2 x I_{set}	-
Impulse margin time	15 ms typically	-

[1] **Note:** Timing accuracy only valid when 2nd harmonic blocking is turned off.

Table 28. Instantaneous residual overcurrent protection EFPIOC

Function	Range or value	Accuracy
Operate current	(1-2500)% of IBase	± 1.0% of I_r at $I \leq I_r$ ± 1.0% of I at $I > I_r$
Reset ratio	> 95%	-
Operate time	20 ms typically at 0 to 2 x I_{set}	-
Reset time	30 ms typically at 2 to 0 x I_{set}	-
Critical impulse time	10 ms typically at 0 to 2 x I_{set}	-
Operate time	10 ms typically at 0 to 5x I_{set}	-
Reset time	40 ms typically at 5 to 0x I_{set}	-
Critical impulse time	2 ms typically at 0 to 5 x I_{set}	-
Dynamic overreach	< 5% at τ = 100 ms	-

Table 29. Four step residual overcurrent protection EF4PTOC

Function	Range or value	Accuracy
Operate current	(1-2500)% of *IBase*	± 1.0% of I_r at $I < I_r$ ± 1.0% of I at $I > I_r$
Reset ratio	> 95%	-
Operate current for directional comparison, Zero sequence	(1–100)% of *IBase*	± 2.0% of I_r
Operate current for directional comparison, Negative sequence	(1–100)% of *IBase*	± 2.0% of I_r
Min. operating current	(1-10000)% of *IBase*	± 1.0% of I_r at $I < I_r$ ± 1.0% of I at $I > I_r$
Minimum operate time for inverse characteristics	(0.000-60.000) s	± 0.5% ± 25 ms
Timers	(0.000-60.000) s	± 0.5% ±25 ms
Inverse characteristics, see table 73, table 74 and table 75	17 curve types	[1] ANSI/IEEE C37.112 IEC 60255–151 ±3% or ±40 ms $0.10 \le k \le 3.00$ $1.5 \times I_{set} \le I \le 20 \times I_{set}$
Minimum polarizing voltage, Zero sequence	(1–100)% of *UBase*	± 0.5% of U_r
Minimum polarizing voltage, Negative sequence	(1–100)% of *UBase*	± 0.5% of U_r
Minimum polarizing current, Zero sequence	(2–100)% of *IBase*	±1.0% of I_r
Minimum polarizing current, Negative sequence	(2–100)% of *IBase*	±1.0% of I_r
Real part of source Z used for current polarization	(0.50-1000.00) Ω/phase	-
Imaginary part of source Z used for current polarization	(0.50–3000.00) Ω/phase	-
Operate time, non-directional start function	30 ms typically at 0.5 to 2 x I_{set}	-
Reset time, non-directional start function	30 ms typically at 2 to 0.5 x I_{set}	-
Operate time, directional start function	30 ms typically at 0,5 to 2 x I_N	-
Reset time, directional start function	30 ms typically at 2 to 0,5 x I_N	-

[1] **Note:** Timing accuracy only valid when 2nd harmonic blocking is turned off.

Table 30. Sensitive directional residual overcurrent and power protection SDEPSDE

Function	Range or value	Accuracy
Operate level for $3I_0 \cdot \cos\varphi$ directional residual overcurrent	(0.25-200.00)% of *IBase* At low setting: (2.5-10) mA (10-50) mA	± 1.0% of I_r at $I \leq I_r$ ± 1.0% of I at $I > I_r$ ±0.5 mA ±1.0 mA
Operate level for $3I_0 \cdot 3U_0 \cdot \cos\varphi$ directional residual power	(0.25-200.00)% of *SBase* At low setting: (0.25-5.00)% of *SBase*	± 2.0% of S_r at $S \leq S_r$ ± 2.0% of S at $S > S_r$ ± 10% of set value
Operate level for $3I_0$ and φ residual overcurrent	(0.25-200.00)% of *IBase* At low setting: (2.5-10) mA (10-50) mA	± 1.0% of I_r at $\leq I_r$ ± 1.0% of I at $I > I_r$ ±0.5 mA ±1.0 mA
Operate level for non-directional overcurrent	(1.00-400.00)% of *IBase* At low setting: (10-50) mA	± 1.0% of I_r at $I \leq I_r$ ± 1.0% of I at $I > I_r$ ± 1.0 mA
Operate level for non-directional residual overvoltage	(1.00-200.00)% of *UBase*	± 0.5% of U_r at $U \leq U_r$ ± 0.5% of U at $U > U_r$
Residual release current for all directional modes	(0.25-200.00)% of *IBase* At low setting: (2.5-10) mA (10-50) mA	± 1.0% of I_r at $I \leq I_r$ ± 1.0% of I at $I > I_r$ ±0.5 mA ± 1.0 mA
Residual release voltage for all directional modes	(1.00 - 300.00)% of *UBase*	± 0.5% of U_r at $U \leq U_r$ ± 0.5% of U at $U > U_r$
Reset ratio	> 95%	-
Timers	(0.000-60.000) s	± 0.5% ±25 ms
Inverse characteristics, see table 73, table 74 and table 75	17 curve types	ANSI/IEEE C37.112 IEC 60255–151 +100 ms±(3% or 90 ms) $0.10 \leq k \leq 3.00$ $1.5 \times I_{set} \leq I \leq 20 \times I_{set}$
Relay characteristic angle RCA	(-179 to 180) degrees	± 2.0 degrees
Relay open angle ROA	(0-90) degrees	± 2.0 degrees
Operate time, non-directional residual over current	80 ms typically at 0.5 to 2 x I_{set}	-
Reset time, non-directional residual over current	90 ms typically at 1.2 to 0.5 x I_{set}	-
Operate time, non-directional residual overvoltage	70 ms typically at 0.8 to 1.5 x U_{set}	-

Table 30. Sensitive directional residual overcurrent and power protection SDEPSDE, continued

Function	Range or value	Accuracy
Reset time, non-directional residual overvoltage	120 ms typically at 1.2 to 0.8 x U_{set}	-
Operate time, directional residual over current	260 ms typically at 0.5 to 2 x I_{set}	-
Reset time, directional residual over current	170 ms typically at 2 to 0.5 x I_{set}	-
Critical impulse time non-directional residual over current	100 ms typically at 0 to 2 x I_{set} 20 ms typically at 0 to 10 x I_{set}	- -
Impulse margin time non-directional residual over current	25 ms typically	-

Table 31. Thermal overload protection, one time constant LCPTTR/LFPTTR

Function	Range or value	Accuracy
Reference current	(0-400)% of *IBase*	± 1.0% of I_r
Reference temperature	(0-300)°C, (0 - 600)°F	± 2.0°C, ±2°F
Operate time: $t = \tau \cdot \ln\left(\frac{I^2 - I_p^2}{I^2 - I_b^2}\right)$ EQUATION1356 V1 EN (Equation 1) I = actual measured current I_p = load current before overload occurs I_b = base current, IBase	Time constant τ = (0–1000) minutes	IEC 60255-8, ±5% + 200 ms
Alarm temperature	(0-200)°C, (0-400)°F	± 2.0°C
Trip temperature	(0-300)°C, (0-600)°F	± 2.0°C
Reset level temperature	(0-300)°C, (0-600)°F	± 2.0°C

Table 32. Breaker failure protection, 3-phase activation and output CCRBRF

Function	Range or value	Accuracy
Operate phase current	(5-200)% of *IBase*	± 1.0% of I_r at $I \leq I_r$ ± 1.0% of I at $I > I_r$
Reset ratio, phase current	> 95%	-
Operate residual current	(2-200)% of *IBase*	± 1.0% of I_r at $I \leq I_r$ ± 1.0% of I at $I > I_r$
Reset ratio, residual current	> 95%	-
Phase current level for blocking of contact function	(5-200)% of *IBase*	± 1.0% of I_r at $I \leq I_r$ ± 1.0% of I at $I > I_r$
Reset ratio	> 95%	-
Timers	(0.000-60.000) s	± 0.5% ±10 ms
Operate time for current detection	35 ms typically	-
Reset time for current detection	10 ms maximum	-

Table 33. Breaker failure protection, phase segregated activation and output CSPRBRF

Function	Range or value	Accuracy
Operate phase current	(5-200)% of *IBase*	± 1.0% of I_r at $I \leq I_r$ ± 1.0% of I at $I > I_r$
Reset ratio, phase current	> 95%	-
Operate residual current	(2-200)% of *IBase*	± 1.0% of I_r at $I \leq I_r$ ± 1.0% of I at $I > I_r$
Reset ratio, residual current	> 95%	-
Phase current level for blocking of contact function	(5-200)% of *IBase*	± 1.0% of I_r at $I \leq I_r$ ± 1.0% of I at $I > I_r$
Reset ratio	> 95%	-
Timers	(0.000-60.000) s	± 0.5% ±10 ms
Operate time for current detection	35 ms typically	-
Reset time for current detection	10 ms maximum	-

Table 34. Stub protection STBPTOC

Function	Range or value	Accuracy
Operating current	(1-2500)% of *IBase*	± 1.0% of I_r at $I \leq I_r$ ± 1.0% of I at $I > I_r$
Reset ratio	> 95%	-
Operate time	20 ms typically at 0 to 2 x I_{set}	-
Reset time	30 ms typically at 2 to 0 x I_{set}	-
Critical impulse time	10 ms typically at 0 to 2 x I_{set}	-
Impulse margin time	15 ms typically	-

Table 35. Pole discordance protection CCRPLD

Function	Range or value	Accuracy
Operate value, current asymmetry level	(0-100) %	± 1.0% of I_r
Reset ratio	>95%	-
Time delay	(0.000-60.000) s	± 0.5% ± 25 ms

Table 36. Broken conductor check BRCPTOC

Function	Range or value	Accuracy
Minimum phase current for operation	(5–100)% of *IBase*	± 1.0% of I_r
Unbalance current operation	(50-90)% of maximum current	± 2.0% of I_r
Timer	(0.00-60.000) s	± 0.5% ± 25 ms
Operate time for start function	35 ms typically	-
Reset time for start function	30 ms typically	-
Critical impulse time	15 ms typically	-
Impulse margin time	10 ms typically	-

Table 37. Directional over/underpower protection GOPPDOP, GUPPDUP

Function	Range or value	Accuracy
Power level	(0.0–500.0)% of *SBase*	± 1.0% of S_r at $S < S_r$ ± 1.0% of S at $S > S_r$
	(1.0-2.0)% of *SBase*	< ± 50% of set value
	(2.0-10)% of *SBase*	< ± 20% of set value
Characteristic angle	(-180.0–180.0) degrees	2 degrees
Timers	(0.010 - 6000.000) s	± 0.5% ± 25 ms

Table 38. Negative sequence based overcurrent function DNSPTOC

Function	Range or value	Accuracy
Operate current	(2.0 - 5000.0) % of *IBase*	± 1.0% of I_r at I <I_r ± 1.0% of I at I > I_r
Reset ratio	> 95 %	-
Low voltage level for memory	(0.0 - 5.0) % of *UBase*	< ± 0.5% of U_r
Relay characteristic angle	(-180 - 180) degrees	± 2.0 degrees
Relay operate angle	(1 - 90) degrees	± 2.0 degrees
Timers	(0.00 - 6000.00) s	± 0.5% ± 25 ms
Operate time, non-directional	30 ms typically at 0 to 2 x I_{set} 20 ms typically at 0 to 10 x I_{set}	-
Reset time, non-directional	40 ms typically at 2 to 0 x I_{set}	-
Operate time, directional	30 ms typically at 0 to 2 x I_{set} 20 ms typically at 0 to 10 x I_{set}	-
Reset time, directional	40 ms typically at 2 to 0 x I_{set}	-
Critical impulse time	10 ms typically at 0 to 2 x I_{set} 2 ms typically at 0 to 10 x I_{set}	-
Impulse margin time	15 ms typically	-
Dynamic overreach	< 10% at t = 300 ms	-

Voltage protection

Table 39. Two step undervoltage protection UV2PTUV

Function	Range or value	Accuracy
Operate voltage, low and high step	(1–100)% of *UBase*	± 0.5% of U_r
Reset ratio	<105%	-
Inverse time characteristics for low and high step, see table 77	-	See table 77
Definite time delay, step 1	(0.00 - 6000.00) s	± 0.5% ± 25 ms
Definite time delays, step 2	(0.000-60.000) s	± 0.5% ±25 ms
Minimum operate time, inverse characteristics	(0.000–60.000) s	± 0.5% ± 25 ms
Operate time, start function	30 ms typically at 1.2 to 0.5 x U_{set}	-
Reset time, start function	40 ms typically at 0.5 to 1.2 xU_{set}	-
Critical impulse time	10 ms typically at 1.2 to 0.8 x U_{set}	-
Impulse margin time	15 ms typically	-

Table 40. Two step overvoltage protection OV2PTOV

Function	Range or value	Accuracy
Operate voltage, low and high step	(1-200)% of *UBase*	± 0.5% of U_r at U < U_r ± 0.5% of U at U > U_r
Reset ratio	>95%	-
Inverse time characteristics for low and high step, see table 76	-	See table 76
Definite time delay, step 1	(0.00 - 6000.00) s	± 0.5% ± 25 ms
Definite time delays, step 2	(0.000-60.000) s	± 0.5% ± 25 ms
Minimum operate time, Inverse characteristics	(0.000-60.000) s	± 0.5% ± 25 ms
Operate time, start function	30 ms typically at 0 to 2 x U_{set}	-
Reset time, start function	40 ms typically at 2 to 0 x U_{set}	-
Critical impulse time	10 ms typically at 0 to 2 x U_{set}	-
Impulse margin time	15 ms typically	-

Table 41. Two step residual overvoltage protection ROV2PTOV

Function	Range or value	Accuracy
Operate voltage, step 1	(1-200)% of *UBase*	± 0.5% of U_r at U < U_r ± 0.5% of U at U > U_r
Operate voltage, step 2	(1–100)% of *UBase*	± 0.5% of U_r at U < U_r ± 0.5% of U at U > U_r
Reset ratio	>95%	-
Inverse time characteristics for low and high step, see table 78	-	See table 78
Definite time setting, step 1	(0.00–6000.00) s	± 0.5% ± 25 ms
Definite time setting, step 2	(0.000–60.000) s	± 0.5% ± 25 ms
Minimum operate time for step 1 inverse characteristic	(0.000-60.000) s	± 0.5% ± 25 ms
Operate time, start function	30 ms typically at 0 to 2 x U_{set}	-
Reset time, start function	40 ms typically at 2 to 0 x U_{set}	-
Critical impulse time	10 ms typically at 0 to 1.2 xU_{set}	-
Impulse margin time	15 ms typically	-

Table 42. Loss of voltage check LOVPTUV

Function	Range or value	Accuracy
Operate voltage	(0–100)% of UBase	± 0.5% of U_r
Reset ratio	<105%	-
Pulse timer	(0.050–60.000) s	± 0.5% ± 25 ms
Timers	(0.000–60.000) s	± 0.5% ± 25 ms

Frequency protection

Table 43. Under frequency protection SAPTUF

Function	Range or value	Accuracy
Operate value, start function	(35.00-75.00) Hz	± 2.0 mHz
Operate value, restore frequency	(45 - 65) Hz	± 2.0 mHz
Reset ratio	<1.001	-
Operate time, start function	At 50 Hz: 200 ms typically at f_{set} +0.5 Hz to f_{set} -0.5 Hz At 60 Hz: 170 ms typically at f_{set} +0.5 Hz to f_{set} -0.5 Hz	-
Reset time, start function	At 50 Hz: 60 ms typically at f_{set} -0.5 Hz to f_{set} +0.5 Hz At 60 Hz: 50 ms typically at f_{set} -0.5 Hz to f_{set} +0.5 Hz	-
Operate time delay	(0.000-60.000)s	<250 ms
Restore time delay	(0.000-60.000)s	<150 ms

Table 44. Overfrequency protection SAPTOF

Function	Range or value	Accuracy
Operate value, start function	(35.00-75.00) Hz	± 2.0 mHz at symmetrical three-phase voltage
Reset ratio	>0.999	-
Operate time, start function	At 50 Hz: 200 ms typically at f_{set} -0.5 Hz to f_{set} +0.5 Hz At 60 Hz: 170 ms typically at f_{set} -0.5 Hz to f_{set} +0.5 Hz	-
Reset time, start function	At 50 and 60 Hz: 55 ms typically at f_{set} +0.5 Hz to f_{set}-0.5 Hz	-
Timer	(0.000-60.000)s	<250 ms

Table 45. Rate-of-change frequency protection SAPFRC

Function	Range or value	Accuracy
Operate value, start function	(-10.00-10.00) Hz/s	± 10.0 mHz/s
Operate value, restore enable frequency	(45.00 - 65.00) Hz	± 2.0 mHz
Timers	(0.000 - 60.000) s	<130 ms
Operate time, start function	At 50 Hz: 100 ms typically At 60 Hz: 80 ms typically	-

Secondary system supervision

Table 46. Current circuit supervision CCSRDIF

Function	Range or value	Accuracy
Operate current	(5-200)% of I_r	± 10.0% of I_r at $I \leq I_r$ ± 10.0% of I at $I > I_r$
Block current	(5-500)% of I_r	± 5.0% of I_r at $I \leq I_r$ ± 5.0% of I at $I > I_r$

Table 47. Fuse failure supervision SDDRFUF

Function	Range or value	Accuracy
Operate voltage, zero sequence	(1-100)% of UBase	± 1.0% of U_r
Operate current, zero sequence	(1–100)% of IBase	± 1.0% of I_r
Operate voltage, negative sequence	(1–100)% of UBase	± 0.5% of U_r
Operate current, negative sequence	(1–100)% of IBase	± 1.0% of I_r
Operate voltage change level	(1–100)% of UBase	± 5.0% of U_r
Operate current change level	(1–100)% of IBase	± 5.0% of I_r
Operate phase voltage	(1-100)% of UBase	± 0.5% of U_r
Operate phase current	(1-100)% of IBase	± 1.0% of I_r
Operate phase dead line voltage	(1-100)% of UBase	± 0.5% of U_r
Operate phase dead line current	(1-100)% of IBase	± 1.0% of I_r

Table 48. Breaker close/trip circuit monitoring TCSSCBR

Function	Range or value	Accuracy
Operate time delay	(0.020 - 300.000) s	± 0,5% ± 110 ms

Control

Table 49. Synchronizing, synchrocheck and energizing check SESRSYN

Function	Range or value	Accuracy
Phase shift, φ_{line} - φ_{bus}	(-180 to 180) degrees	-
Voltage ratio, U_{bus}/U_{line}	0.500 - 2.000	-
Reset ratio, synchrocheck	> 95%	-
Frequency difference limit between bus and line for synchrocheck	(0.003-1.000) Hz	± 2.0 mHz
Phase angle difference limit between bus and line for synchrocheck	(5.0-90.0) degrees	± 2.0 degrees
Voltage difference limit between bus and line for synchronizing and synchrocheck	0.03-0.50 p.u	± 0.5% of U_r
Time delay output for synchrocheck	(0.000-60.000) s	± 0.5% ± 25 ms
Frequency difference minimum limit for synchronizing	(0.003-0.250) Hz	± 2.0 mHz
Frequency difference maximum limit for synchronizing	(0.050-0.500) Hz	± 2.0 mHz
Maximum allowed frequency rate of change	(0.000-0.500) Hz/s	± 10.0 mHz/s
Closing time of the breaker	(0.000-60.000) s	± 0.5% ± 10 ms
Breaker closing pulse duration	(0.000-60.000) s	± 0.5% ± 10 ms
tMaxSynch, which resets synchronizing function if no close has been made before set time	(0.000-60.000) s	± 0.5% ± 10 ms
Minimum time to accept synchronizing conditions	(0.000-60.000) s	± 0.5% ± 10 ms
Frequency difference minimum limit for synchronizing	(0.003-0.250) Hz	± 2.0 mHz
Frequency difference maximum limit for synchronizing	(0.050-0.500) Hz	± 2.0 mHz
Closing time of the breaker	(0.000-60.000) s	± 0.5% ± 10 ms
Breaker closing time duration	(0.050-60.000) s	± 0.5% ± 10 ms
tMaxSynch, which resets synchronizing function if no close has been made before set time	(0.00-6000.00) s	± 0.5% ± 10 ms
Time delay output for energizing check	(0.000-60.000) s	± 0.5% ± 10 ms
Operate time for synchrocheck function	160 ms typically	-
Operate time for energizing function	80 ms typically	-
Minimum time to accept synchronizing conditions	(0.000-60.000) s	± 0.5% ± 10 ms
Maximum allowed frequency rate of change	(0.000-0.500) Hz/s	± 10.0 mHz/s

Table 50. Autorecloser for 3-phase operation SMBRREC

Function	Range or value	Accuracy
Number of autoreclosing shots	1 - 5	-
Autoreclosing open time: shot 1 - t1 3Ph	(0.000-60.000) s	± 0.5% ± 25 ms
shot 2 - t2 3Ph shot 3 - t3 3Ph shot 4 - t4 3Ph shot 5 - t5 3Ph	(0.00-6000.00) s	
Autorecloser maximum wait time for sync	(0.00-6000.00) s	
Maximum trip pulse duration	(0.000-60.000) s	
Inhibit reset time	(0.000-60.000) s	
Reclaim time	(0.00-6000.00) s	
Minimum time CB must be closed before AR becomes ready for autoreclosing cycle	(0.00-6000.00) s	
CB check time before unsuccessful	(0.00-6000.00) s	
Wait for master release	(0.00-6000.00) s	
Wait time after close command before proceeding to next shot	(0.000-60.000) s	

Table 51. Autorecloser for 1/3-phase operation STBRREC

Function	Range or value	Accuracy
Number of autoreclosing shots	1-5	-
Autoreclosing open time: Shot 1 - t1 3Ph Shot 1 - t1 1Ph	(0.000-60.000) s	± 0.5% ± 25 ms
shot 2 - t2 3Ph shot 3 - t3 3Ph shot 4 - t4 3Ph shot 5 - t5 3Ph	(0.00-6000.00) s	
Autorecloser maximum wait time for sync	(0.00-6000.00) s	
Open time extension for long trip time	(0.000-60.000) s	
Maximum trip pulse duration	(0.000-60.000) s	
Inhibit reset time	(0.000-60.000) s	
Reclaim time	(0.00-6000.00) s	
Minimum time CB must be closed before AR becomes ready for autoreclosing cycle	(0.00-6000.00) s	
CB check time before unsuccessful	(0.00-6000.00) s	
Wait for master release	(0.00-6000.00) s	
Wait time after close command before proceeding to next shot	(0.000-60.000) s	

Logic

Table 52. Tripping logic common 3-phase output SMPPTRC

Function	Range or value	Accuracy
Trip action	3-ph	-
Timers	(0.000-60.000) s	± 0.5% ± 10 ms

Table 53. Tripping logic phase segregated output SPTPTRC

Function	Range or value	Accuracy
Trip action	3-Ph, 1/3-Ph	-
Timers	(0.000-60.000) s	± 0.5% ± 10 ms

Table 54. Configurable logic blocks

Logic block	Quantity with cycle time			Range or value	Accuracy
	5 ms	20 ms	100 ms		
AND	60	60	160	-	-
OR	60	60	160	-	-
XOR	10	10	20	-	-
INVERTER	30	30	80	-	-
SRMEMORY	10	10	20	-	-
RSMEMORY	10	10	20	-	-
GATE	10	10	20	-	-
PULSETIMER	10	10	20	(0.000–90000.000) s	± 0.5% ± 25 ms for 20 ms cycle time
TIMERSET	10	10	20	(0.000–90000.000) s	± 0.5% ± 25 ms for 20 ms cycle time
LOOPDELAY	10	10	20		

Monitoring

Table 55. Technical datacovering measurement functions:CVMMXN, CMMXU, VMMXU, CMSQI, VMSQI, VNMMXU

Function	Range or value	Accuracy
Voltage	(0.1-1.5) ×U_r	± 0.5% of U_r at U≤U_r ± 0.5% of U at U > U_r
Connected current	(0.2-4.0) × I_r	± 0.5% of I_r at I ≤ I_r ± 0.5% of I at I > I_r
Active power, P	0.1 x U_r< U < 1.5 x U_r 0.2 x I_r < I < 4.0 x I_r	± 1.0% of S_r at S ≤ S_r ± 1.0% of S at S > S_r
Reactive power, Q	0.1 x U_r< U < 1.5 x U_r 0.2 x I_r < I < 4.0 x I_r	± 1.0% of S_r at S ≤ S_r ± 1.0% of S at S > S_r
Apparent power, S	0.1 x U_r < U < 1.5 x U_r 0.2 x I_r< I < 4.0 x I_r	± 1.0% of S_r at S ≤ S_r ± 1.0% of S at S > S_r
Apparent power, S Three phase settings	cos phi = 1	± 0.5% of S at S > S_r ± 0.5% of S_r at S ≤ S_r
Power factor, cos (φ)	0.1 x U_r < U < 1.5 x U_r 0.2 x I_r< I < 4.0 x I_r	< 0.02

Table 56. Event counter CNTGGIO

Function	Range or value	Accuracy
Counter value	0-10000	-
Max. count up speed	10 pulses/s	-

Table 57. Disturbance report DRPRDRE

Function	Range or value	Accuracy
Current recording	-	± 1,0% of I_r at $I \leq I_r$ ± 1,0% of I at I > Ir
Voltage recording	-	± 1,0% of U_r at $U \leq U_r$ ± 1,0% of U at $U > U_r$
Pre-fault time	(0.05–3.00) s	-
Post-fault time	(0.1–10.0) s	-
Limit time	(0.5–8.0) s	-
Maximum number of recordings	100, first in - first out	-
Time tagging resolution	1 ms	See time synchronization technical data
Maximum number of analog inputs	30 + 10 (external + internally derived)	-
Maximum number of binary inputs	96	-
Maximum number of phasors in the Trip Value recorder per recording	30	-
Maximum number of indications in a disturbance report	96	-
Maximum number of events in the Event recording per recording	150	-
Maximum number of events in the Event list	1000, first in - first out	-
Maximum total recording time (3.4 s recording time and maximum number of channels, typical value)	340 seconds (100 recordings) at 50 Hz, 280 seconds (80 recordings) at 60 Hz	-
Sampling rate	1 kHz at 50 Hz 1.2 kHz at 60 Hz	-
Recording bandwidth	(5-300) Hz	-

Table 58. Event list DRPRDRE

Function		Value
Buffer capacity	Maximum number of events in the list	1000
Resolution		1 ms
Accuracy		Depending on time synchronizing

Table 59. Indications DRPRDRE

Function		Value
Buffer capacity	Maximum number of indications presented for single disturbance	96
	Maximum number of recorded disturbances	100

Table 60. Event recorder DRPRDRE

Function		Value
Buffer capacity	Maximum number of events in disturbance report	150
	Maximum number of disturbance reports	100
Resolution		1 ms
Accuracy		Depending on time synchronizing

Table 61. Trip value recorder DRPRDRE

Function		Value
Buffer capacity	Maximum number of analog inputs	30
	Maximum number of disturbance reports	100

Table 62. Disturbance recorder DRPRDRE

Function		Value
Buffer capacity	Maximum number of analog inputs	40
	Maximum number of binary inputs	96
	Maximum number of disturbance reports	100
Maximum total recording time (3.4 s recording time and maximum number of channels, typical value)		340 seconds (100 recordings) at 50 Hz 280 seconds (80 recordings) at 60 Hz

Table 63. Station battery supervision SPVNZBAT

Function	Range or value	Accuracy
Lower limit for the battery terminal voltage	(60-140) % of Ubat	± 1.0% of set battery voltage
Reset ratio, lower limit	<105 %	-
Upper limit for the battery terminal voltage	(60-140) % of Ubat	± 1.0% of set battery voltage
Reset ratio, upper limit	>95 %	-
Timers	(0.000-60.000) s	± 0.5% ± 110 ms

Table 64. Insulation gas monitoring function SSIMG

Function	Range or value	Accuracy
Pressure alarm	0.00-25.00	-
Pressure lockout	0.00-25.00	-
Temperature alarm	-40.00-200.00	-
Temperature lockout	-40.00-200.00	-
Timers	(0.000-60.000) s	± 0.5% ± 110 ms

Table 65. Insulation liquid monitoring function SSIML

Function	Range or value	Accuracy
Alarm, oil level	0.00-25.00	-
Oil level lockout	0.00-25.00	-
Temperature alarm	-40.00-200.00	-
Temperature lockout	-40.00-200.00	-
Timers	(0.000-60.000) s	± 0.5% ± 110 ms

Table 66. Circuit breaker condition monitoring SSCBR

Function	Range or value	Accuracy
Alarm levels for open and close travel time	(0-200) ms	± 0.5% ± 25 ms
Alarm levels for number of operations	(0 - 9999)	-
Setting of alarm for spring charging time	(0.00-60.00) s	± 0.5% ± 25 ms
Time delay for gas pressure alarm	(0.00-60.00) s	± 0.5% ± 25 ms
Time delay for gas pressure lockout	(0.00-60.00) s	± 0.5% ± 25 ms

Metering

Table 67. Pulse counter PCGGIO

Function	Setting range	Accuracy
Cycle time for report of counter value	(1–3600) s	-

Table 68. Function for energy calculation and demand handling ETPMMTR

Function	Range or value	Accuracy
Energy metering	MWh Export/Import, MVArh Export/Import	Input from MMXU. No extra error at steady load

Station communication

Table 69. Communication protocol

Function	Value
Protocol TCP/IP	Ethernet
Communication speed for the IEDs	100 Mbit/s
Protocol	IEC 61850–8–1
Communication speed for the IEDs	100BASE-FX
Protocol	DNP3.0/TCP
Communication speed for the IEDs	100BASE-FX
Protocol, serial	IEC 60870–5–103
Communication speed for the IEDs	9600 or 19200 Bd
Protocol, serial	DNP3.0
Communication speed for the IEDs	300–19200 Bd

Hardware

IED

Table 70. Degree of protection of rack-mounted IED

Description	Value
Front side	IP 40
Rear side, connection terminals	IP 20

Table 71. Degree of protection of the LHMI

Description	Value
Front and side	IP40

Dimensions

Table 72. Dimensions of the IED - 3U full 19" rack

Description	Value
Width	442 mm (17.40 inches)
Height	132 mm (5.20 inches), 3U
Depth	249.5 mm (9.82 inches)
Weight box	10 kg (<22.04 lbs)
Weight LHMI	1.3 kg (2.87 lbs)

Inverse time characteristics

Table 73. ANSI Inverse time characteristics

Function	Range or value	Accuracy
Operating characteristic: $t = \left(\frac{A}{\left(I^P - 1\right)} + B \right) \cdot k$ EQUATION1249-SMALL V1 EN $I = I_{measured}/I_{set}$	k = (0.05-999) in steps of 0.01	-
ANSI Extremely Inverse	A=28.2, B=0.1217, P=2.0	
ANSI Very inverse	A=19.61, B=0.491, P=2.0	
ANSI Normal Inverse	A=0.0086, B=0.0185, P=0.02, tr=0.46	
ANSI Moderately Inverse	A=0.0515, B=0.1140, P=0.02	
ANSI Long Time Extremely Inverse	A=64.07, B=0.250, P=2.0	
ANSI Long Time Very Inverse	A=28.55, B=0.712, P=2.0	
ANSI Long Time Inverse	A=0.086, B=0.185, P=0.02	

Table 74. IEC Inverse time characteristics

Function	Range or value	Accuracy
Operating characteristic: $t = \left(\frac{A}{\left(I^P - 1\right)} \right) \cdot k$ EQUATION1251-SMALL V1 EN $I = I_{measured}/I_{set}$	k = (0.05-999) in steps of 0.01	-
IEC Normal Inverse	A=0.14, P=0.02	
IEC Very inverse	A=13.5, P=1.0	
IEC Inverse	A=0.14, P=0.02	
IEC Extremely inverse	A=80.0, P=2.0	
IEC Short time inverse	A=0.05, P=0.04	
IEC Long time inverse	A=120, P=1.0	

Table 75. RI and RD type inverse time characteristics

Function	Range or value	Accuracy
RI type inverse characteristic $t = \frac{1}{0.339 - \frac{0.236}{I}} \cdot k$ EQUATION1137-SMALL V1 EN $I = I_{measured}/I_{set}$	k = (0.05-999) in steps of 0.01	
RD type logarithmic inverse characteristic $t = 5.8 - \left(1.35 \cdot ln \frac{I}{k}\right)$ EQUATION1138-SMALL V1 EN $I = I_{measured}/I_{set}$	k = (0.05-999) in steps of 0.01	

Table 76. Inverse time characteristics for overvoltage protection

Function	Range or value	Accuracy
Type A curve: $t = \frac{k}{\left(\frac{U - U>}{U>}\right)}$ EQUATION1436-SMALL V1 EN $U> = U_{set}$ $U = U_{measured}$	k = (0.05-1.10) in steps of 0.01	±5% +60 ms
Type B curve: $t = \frac{k \cdot 480}{\left(32 \cdot \frac{U - U>}{U>} - 0.5\right)^{2.0} - 0.035}$ EQUATION1437-SMALL V1 EN	k = (0.05-1.10) in steps of 0.01	
Type C curve: $t = \frac{k \cdot 480}{\left(32 \cdot \frac{U - U>}{U>} - 0.5\right)^{3.0} - 0.035}$ EQUATION1438-SMALL V1 EN	k = (0.05-1.10) in steps of 0.01	

Table 77. Inverse time characteristics for undervoltage protection

Function	Range or value	Accuracy
Type A curve: $t = \frac{k}{\left(\frac{U < -U}{U <}\right)}$ EQUATION1431-SMALL V1 EN U< = U_{set} U = $UV_{measured}$	k = (0.05-1.10) in steps of 0.01	±5% +60 ms
Type B curve: $t = \frac{k \cdot 480}{\left(32 \cdot \frac{U < -U}{U <} - 0.5\right)^{2.0}} + 0.055$ EQUATION1432-SMALL V1 EN U< = U_{set} U = $U_{measured}$	k = (0.05-1.10) in steps of 0.01	

Table 78. Inverse time characteristics for residual overvoltage protection

Function	Range or value	Accuracy
Type A curve: $t = \frac{k}{\left(\frac{U - U >}{U >}\right)}$ EQUATION1436-SMALL V1 EN U> = U_{set} U = $U_{measured}$	k = (0.05-1.10) in steps of 0.01	±5% +70 ms
Type B curve: $t = \frac{k \cdot 480}{\left(32 \cdot \frac{U - U >}{U >} - 0.5\right)^{2.0}} - 0.035$ EQUATION1437-SMALL V1 EN	k = (0.05-1.10) in steps of 0.01	
Type C curve: $t = \frac{k \cdot 480}{\left(32 \cdot \frac{U - U >}{U >} - 0.5\right)^{3.0}} - 0.035$ EQUATION1438-SMALL V1 EN	k = (0.05-1.10) in steps of 0.01	

19. Ordering for Customized IED

Guidelines

Carefully read and follow the set of rules to ensure problem-free order management. Be aware that certain functions can only be ordered in combination with other functions and that some functions require specific hardware selections.

Product specification

Basic IED 650 platform and common functions housed in 3U 1/1 sized 19” casing

REQ650	Quantity:	☐	1MRK 006 518-AC

Option:

Customer specific configuration	On request

Connection type for Analog modules

Rule: One connection type must be selected

Compression terminals	☐	1MRK 002 960-CA
Ring lug terminals	☐	1MRK 002 960-DA

Connection type for Power supply, Input/Output and communication modules

Rule: One connection type must be selected

Compression terminals	☐	1MRK 002 960-EA
Ring lug terminals	☐	1MRK 002 960-FA

Power supply module

Rule: One Power supply module must be specified

Power supply module*(PSM)*	48-125 VDC	☐	1KHL178073R0001
	110-250 VDC, 100–240V AC	☐	1KHL178082R0001

Current protection

Rule: One Breaker failure protection must be ordered

Rule: If 3 ph tripping logic has been selected only CCRBRF can be selected. If Phase segregated tripping logic has been selected only CSPRBRF can be selected.

Breaker failure protection, 3–phase activation and output (CCRBRF)	Qty:	☐	1MRK 004 908-LA
Breaker failure protection, phase segregated activation and output (CSPRBRF)	Qty	☐	1MRK 004 908-UA

Logic

Rule: One tripping logic type only must be ordered
Note: Selection of Tripping Logic type rules the selection of Instantaneous phase Overcurrent protection, Four step phase Overcurrent protection, Breaker Failure protection and Autorecloser.

Tripping logic, common 3–phase output (SMPPTRC)	Qty:	☐	1MRK 004 922-AA
Tripping logic, phase segregated output (SPTPTRC)	Qty:	☐	1MRK 004 922-UA

Optional functions

Current protection

Rule: Only one Instantaneous phase overcurrent protection can be ordered

Rule: If 3 ph tripping logic has been selected only PHPIOC can be selected. If Phase segregated tripping logic has been selected only SPTPIOC can be selected.

Instantaneous phase overcurrent protection, 3–phase output (PHPIOC)	Qty:	☐	1MRK 004 908-AA
Instantaneous phase overcurrent protection, phase segregated output (SPTPIOC)	Qty:	☐	1MRK 004 908-XA

Rule: Only one Four step phase overcurrent protection can be ordered.
Rule: If 3 ph tripping logic has been selected only OC4PTOC can be selected. If Phase segregated tripping logic has been selected only OC4SPTOC can be selected.

Four step phase overcurrent protection, 3–phase output (OC4PTOC)	Qty:	☐	1MRK 004 908-BB
Four step phase overcurrent protection, phase segregated output (OC4SPTOC)	Qty:	☐	1MRK 004 908-VB
Instantaneous residual overcurrent protection (EFPIOC)	Qty:	☐	1MRK 004 908-CA
Four step residual overcurrent protection, zero/negative sequence direction (EF4PTOC)	Qty:	☐	1MRK 004 908-FA
Sensitive directional residual overcurrent and power protection (SDEPSDE)	Qty:	☐	1MRK 004 908-EA
Thermal overload protection, one time constant, Celsius (LCPTTR)	Qty:	☐	1MRK 004 908-HC
Thermal overload protection, one time constant, Fahrenheit (LFPTTR)	Qty:	☐	1MRK 004 908-HD
Stub protection (STBPTOC)	Qty:	☐	1MRK 004 908-MA
Pole discordance protection (CCRPLD)	Qty:	☐	1MRK 004 908-NA
Broken conductor check (BRCPTOC)	Qty:	☐	1MRK 004 908-PA
Directional underpower protection (GUPPDUP)	Qty:	☐	1MRK 004 908-RB
Directional overpower protection (GOPPDUP)	Qty:	☐	1MRK 004 908-SB
Negative sequence based overcurrent function (DNSPTOC)	Qty:	☐	1MRK 004 908-TA

Voltage protection

Two step undervoltage protection (UV2PTUV)	Qty:	☐	1MRK 004 910-AB
Two step overvoltage protection (OV2PTOV)	Qty:	☐	1MRK 004 910-BB
Two step residual overvoltage protection (ROV2PTOV)	Qty:	☐	1MRK 004 910-CB
Loss of voltage check (LOVPTUV)	Qty:	☐	1MRK 004 910-EA

Frequency protection

Underfrequency protection (SAPTUF)	Qty:	1 ☐ 2 ☐	1MRK 004 912-AA
Overfrequency protection (SAPTOF)	Qty:	1 ☐ 2 ☐	1MRK 004 912-BA
Rate-of-change frequency protection (SAPFRC)	Qty:	1 ☐ 2 ☐	1MRK 004 912-CA

Secondary system supervision

Current circuit supervision (CCSRDIF)	Qty:	☐	1MRK 004 914-AA
Fuse failure supervision (SDDRFUF)	Qty:	☐	1MRK 004 914-BA

Control

Synchrocheck, energizing check and synchronizing (SESRSYN)	Qty:	☐	1MRK 004 917-AC

Rule: Only one of Autorecloser can be ordered

Rule: If 3 ph tripping logic has been selected only SMBRREC can be selected. If Phase segregated tripping logic has been selected only STBRREC can be selected.

Autorecloser for 3–phase operation (SMBRREC)	Qty:	☐	1MRK 004 917-BA
Autorecloser for 1/3–phase operation (STBRREC)	Qty:	☐	1MRK 004 917-SA

Monitoring

Station battery supervision (SPVNZBAT)	Qty:	☐	1MRK 004 925-HB
Insulation gas monitoring function (SSIMG,)	Qty:	☐	1MRK 004 925-KA
Insulation liquid monitoring function (SSIML)	Qty:	☐	1MRK 004 925-LA
Circuit breaker condition monitoring (SSCBR)	Qty:	☐	1MRK 004 925-MA

First local HMI user dialogue language

HMI language, English IEC	Always included

Additional local HMI user dialogue language

HMI language, English US	☐	1MRK 002 940-MA

Optional hardware

Human machine interface

Rule: One must be ordered.

Display type	Keypad symbol	Case size		
Local human machine interface (LHMI)	IEC	3U 1/1 19"	☐	1KHL160055R0001
Local human machine interface (LHMI)	ANSI	3U 1/1 19"	☐	1KHL160042R0001

Analog system

Rule: One Transformer input module must be ordered

Transformer module (TRM)	6I+4U, 1/5A,100/220V	Qty:	☐	1KHL178083R0001
Transformer module (TRM)	8I+2U, 1/5A, 100/220V	Qty:	☐	1KHL178083R0013
Transformer module (TRM)	4I, 1/5A+1I, 0.1/0.5A+5U, 100/220V	Qty:	☐	1KHL178083R0016
Transformer module (TRM)	4I+6U, 1/5A, 100/220V	Qty:	☐	1KHL178083R0003

Rule: Only one Analog input module can be ordered

Analog input module (AIM)	6I+4U, 1/5A, 100/220V	Qty:	☐	1KHL178083R5001
Analog input module (AIM)	4I, 1/5A+1I, 0.1/0.5A+5U, 100/220V	Qty:	☐	1KHL178083R5016

Binary input/output modules

Note: If analog input module (AIM) is ordered only 2 BIO modules can be ordered

Binary input/output module (BIO)	Qty:	1 ☐ 2 ☐ 3 ☐ 4 ☐	1KHL178074R0001

Rack mounting kit

Rack mounting kit for 3U 1/1 x 19” case	Quantity:	☐	1KHL400352R0001

20. Ordering for Configured IED

Guidelines
Carefully read and follow the set of rules to ensure problem-free order management.
Please refer to the available functions table for included application functions.

To obtain the complete ordering code, please combine code from the tables, as given in the example below.

Exemple code: REQ650*1.2-A01X00-X00-B1A5-B-A-SA-AB1-RA3-AXXX-E. Using the code of each position #1-11 specified as REQ650*1-2 2-3-4 4-5-6-7 7-8 8-9 9-10 10 10 10-11

#	1	-	2		-	3	-	4		-	5	6	-	7		-	8		-	9		-	10				-	11
REQ650*		-			-		-			-			-			-			-			-					-	

	Position	
SOFTWARE	**#1**	**Notes and Rules**
Version number		
Version no	1.2	
Selection for position #1.	1.2	

Configuration alternatives	**#2**		**Notes and Rules**
Single breaker, 3-phase, 1 busbar	A01		
Single breaker, single phase, 1 busbar	A11		
Single breaker, single phase, 2 busbars	B11		
ACT configuration			
ABB standard configuration		X00	
Selection for position #2.		X00	

Software options	**#3**	**Notes and Rules**
No option	X00	
Selection for postition #3	X00	

First HMI language	**#4**		**Notes and Rules**
English IEC	B1		
Selection for position #4.			
Additional HMI language		**#4**	
No second HMI language		X0	
Selection for position #4.	B1	X0	

Casing	**#5**	**Notes and Rules**
Rack casing, 3U 1/1 x 19"	D	
Selection for position #5.	D	

Mounting details with IP40 of protection from the front	#6	Notes and Rules
No mounting kit included	X	
Rack mounting kit for 3U 1/1 x 19"	H	
Selection for position #6.		

Connection type for Power supply, Input/output and Communication modules	#7		Notes and Rules
Compression terminals	S		
Ringlug terminals	R		
Power supply			
Slot position:		pPSM	
100-240V AC, 110-250V DC, 9BO		A	
48-125V DC, 9BO		B	
Selection for position #7.			

Human machine interface	#8		Notes and Rules
Local human machine interface, OL8000, IEC 3U 1/1 x 19", Basic	E		
Detached LHMI			
No detached mounting of LHMI		X0	
Selection for position #8.	E	X0	

Connection type for Analog modules	#9		Notes and Rules
Compression terminals	S		
Ringlug terminals	R		
Analog system			
Slot position:		p2	
Transformer module, 4I, 1/5A+1I, 0.1/0.5A+5U, 100/220V		A3	
Selection for position #9.		A3	

Binary input/output module	#10				Notes and Rules
Slot position (rear view)	p3	p4	p5	p6	
Available slots in 1/1 case					
No board in slot		X	X	X	
Binary input/output module 9 BI, 3 NO Trip, 5 NO Signal, 1 CO Signal	A	A	A	A	p4, p5, p6 optional for A01 p4=A, p5, p6 optional for A11/B11
Selection for position #10.	A				

Communication and processing module	#11	Notes and Rules
Slot position (rear view)	pCOM	
12BI, IRIG-B, RS485, Ethernet, LC optical, ST serial	F	
Selection for position #11.	F	

21. Ordering for Accessories

Configuration and monitoring tools

Front connection cable between LCD-HMI and PC	Quantity:		1MRK 001 665-CA
LED Label special paper A4, 1 pc	Quantity:		1MRK 002 038-CA
LED Label special paper Letter, 1 pc	Quantity:		1MRK 002 038-DA

Manuals

Note: One (1) IED Connect DVD containing user documentation
Operation manual
Technical manual
Installation manual
Commissioning manual
Application manual
Communication protocol manual, DNP3
Communication protocol manual, IEC61850-8-1
Communication protocol manual, IEC60870-5-103
Cyber security deployment guidelines
Type test certificate
Engineering manual
Point list manual, DNP3
Connectivity packages and LED label template is always included for each IED

Rule: Specify additional quantity of IED Connect DVD requested

User documentation	Quantity:		1MRK 003 500-AA

Rule: Specify the number of printed manuals requested

Operation manual	IEC	Quantity:		1MRK 500 095-UEN
Technical manual	IEC	Quantity:		1MRK 505 281-UEN
Commissioning manual	IEC	Quantity:		1MRK 505 282-UEN
Application manual	IEC	Quantity:		1MRK 505 280-UEN
Communication protocol manual, DNP3	IEC	Quantity:		1MRK 511 257-UEN
Communication protocol manual, IEC 61850-8-1	IEC	Quantity:		1MRK 511 258-UEN
Communication protocol manual, IEC 60870-5-103	IEC	Quantity:		1MRK 511 259-UEN
Engineering manual	IEC	Quantity:		1MRK 511 261-UEN
Installation manual	IEC	Quantity:		1MRK 514 015-UEN
Point list manual, DNP3	IEC	Quantity:		1MRK 511 260-UEN
Cyber Security deployment guidelines	IEC	Quantity:		1MRK 511 268-UEN

Reference information

For our reference and statistics we would be pleased to be provided with the following application data:

Country: End user:

Station name: Voltage level: kV

Related documents

Documents related to REQ650	Identity number
Application manual	1MRK 505 280-UEN
Technical manual	1MRK 505 281-UEN
Commissioning manual	1MRK 505 282-UEN
Product Guide	1MRK 505 283-BEN
Type test certificate	1MRK 505 283-TEN
Application notes for Circuit Breaker Control	1MRG006806

650 series manuals	Identity number
Communication protocol manual, DNP3	1MRK 511 257-UEN
Communication protocol manual, IEC 61850–8–1	1MRK 511 258-UEN
Communication protocol manual, IEC 60870-5-103	1MRK 511 259-UEN
Cyber Security deployment guidelines	1MRK 511 268-UEN
Point list manual, DNP3	1MRK 511 260-UEN
Engineering manual	1MRK 511 261-UEN
Operation manual	1MRK 500 095-UEN
Installation manual	1MRK 514 015-UEN

Contact us

ABB AB
Substation Automation Products
SE-721 59 Västerås, Sweden
Phone +46 (0) 21 32 50 00
Fax +46 (0) 21 14 69 18

www.abb.com/substationautomation

Power and productivity
for a better world™