Installation and commissioning manual

RXHL 422 and RAHL 422
Compact current relay and protection assemblies

About this manual

DocID: 1MRK 509 060-UEN
Issue date: May 2000
Status: New
Version: Initial version

Manufacturer:

ABB Automation Products AB
Substation Automation Division
SE-721 59 Västerås
Sweden
Tel: +46 (0) 21 34 20 00
Fax: +46 (0) 21 14 69 18
Internet: http://www.abb.se

Contents

Chapter 1 Introduction

About this chapter

This chapter introduces the user to the content in the manual. The intended use of the manual and the intended audience is described. The introduction chapter also contains references to other documents.

1 Introduction to the installation and commissioning manual

1.1 About this manual

This manual contains instructions on how to install, commission and maintain the compact current relay and protection assemblies. The manual covers procedures for mechanical and electrical installation, setting and configuration, secondary injection testing, preventive and corrective maintenance. The chapters and sections are organised in the chronological order the protection should be installed and commissioned.

The installation and commissioning manual contains the following chapters:

- The *safety information* chapter presents warning and note signs, which the user should draw attention to.
- The *installation* chapter contains instructions on how to install the protection.
- The *commissioning* chapter contains instructions on how to commission the protection.
- The *operations during commissioning and maintenance* chapter contains instructions on frequently performed operations during commissioning and maintenance, such as reading off primary and secondary service values and disturbance information.
- The *maintenance* chapter contains instructions on how to maintain the protection.
- The *protection assemblies and diagrams* chapter contains descriptions over the protection and assembly variants.
- The *test records* chapter contains test records which could be used for documentation purposes.

1.2 Intended audience

1.2.1 General

The installation and commissioning manual is addressing the installation, commissioning and maintenance personnel responsible for taking the protection into normal service and out of service.

1.2.2 Requirements

The installation personnel must have a basic knowledge in using protection equipment. The commissioning and maintenance personnel must be well experienced in using protection equipment, protection functions and the configured functional logics in the protection.

1.3 Related documents

Document related to COMBIFLEX© assemblies	Identity number
Buyer's guide, Connection and installation components in COMBIFLEX©	1MRK 513 003-BEN
Buyer's guide, Relay accessories and components	1MRK 513 004-BEN
Buyer's guide, Test system COMBITEST	1MRK 512 001-BEN
Buyer's guide, DC-DC converter	1MRK 513 001-BEN
Buyer's guide, Auxiliary relays	1MRK 508 015-BEN

Documents related to RXHL 422 and RAHL 422	Identity number
Technical overview brochure	1MRK 509 057-BEN
Connection and setting guide (only RXHL 422)	1MRK 509 057-WEN
Operator's manual	1MRK 509 058-UEN
Technical reference manual	1MRK 509 059-UEN
Installation and commissioning manual	1MRK 509 060-UEN

1.4 Revisions

Revision	Description
-	Initial version

Chapter 2 Safety information

About this chapter

This chapter contains safety information. Warning and note signs are presented which attend the user to be careful during certain operations in order to avoid human injuries or damage to equipment.

1 Safety signs

1.1 Description of safety signs

1.1.1 The warning sign

The warning sign informs the user that certain operations should be avoided in order to prevent human injuries or damage to equipment.

1.1.2 The note sign

The note sign informs the user to be careful when using the product in certain situations and notifies the user to facts that could be of special interest during certain operations.

1.2 Warning signs

Warning!

Never plug or withdraw a relay from the terminal base without blocking the output circuits or interrupting the auxiliary DC supply. Otherwise there is a risk of unwanted operations.

Warning!

Always avoid to touch the circuitry when the plastic cover, which covers the relay, is removed. The product contains electronic circuitries which can be damaged if exposed to static electricity (ESD). The electronic circuitries also contain high voltage which is lethal to humans.

Warning!

Never disconnect a wire in a current circuit. Always be sure to short-circuit the secondary phase terminals of the current transformers to neutral before the circuit is opened. An opened current circuit will produce an extremely high voltage which is lethal to humans.

1.3 Note signs

Note!

The protection assembly is designed for a maximum continuous current of four times rated value.

Note!

The length of the EMC-cable must be as short as possible when connecting to EMC-earth. Withstand against electrical disturbances could otherwise be hazarded.

Note!

When the excitation characteristic is verified, the primary side of the CT must be an open-circuit and the secondary side disconnected from the relay protection.

Note!

If the LED's are flashing or the green 'In service' LED is dark, an internal fault has occurred. Read the self supervision section in the technical reference manual for further information.

Note!

The calculated phase angle φ *between* U_N *and* I_N *is positive when I lags U.*

Chapter 3 Installation

About this chapter

This chapter contains instructions on how the protection should be installed regarding mechanical and electrical installation. The different instruction sections in this chapter are organized in the order the installation work should be performed.

1 Overview

Before you can start the installation work you must be aware of the application of the protection assembly.

The mechanical and electrical environmental conditions at the installation site must be within the permissible range according to at the data sheets of the protection assembly. Dusty, damp places, places liable to rapid temperature variations, powerful vibrations and shocks, surge voltages of high amplitude and fast rise time, strong induced magnetic fields or similar extreme conditions should be avoided.

Sufficient space must be available in front of and at rear of the protection assembly to allow access for maintenance and future modifications.

When the instructions in this chapter are covered the protection assembly will be ready for commissioning as described in the commissioning chapter.

The installation work starts with unpacking and checking that the items included are according to delivery documents. The mechanical installation includes plugging the relay into a terminal base, which should be fixed on an apparatus bar. The protection assembly is then mounted into a case. The electrical installation means connecting the cables from the transformers, binary I/O and auxiliary voltage.

Warning!

Always avoid to touch the circuitry when the plastic cover, which covers the relay, is removed. The product contains electronic circuitries which can be damaged if exposed to static electricity (ESD). The electronic circuitries also contain high voltage which is lethal to humans.

2 Preparations

2.1 Receiving, unpacking and checking

Procedure

1. **Remove the protection package from the transport case and perform a visual inspection of any possible transport damages.**
2. **Check that all units are included in accordance with the delivery documents.**

   In case of transport damages, appropriate action must be taken against the last carrier and the nearest ABB office or agent should be informed. ABB should be notified immediately if there are any discrepancies in relation to the delivery documents.

3. **Check that the protection assembly has the correct identity markings on the front.**

   The check should confirm that the terminal type, markings and serial number corresponds to what has been ordered.

4. **Check that all screws are firmly tightened and all relay elements are securely fastened.**

2.2 Storage

If the protection must be stored before installation. This must be done in a dry and dust-free place, preferably in the original transport case.

3 Mechanical installation

This section contains instructions for the mechanical installation.

Before you can start the mechanical installation you must purchase terminal bases, apparatus bars and an appropriate case. These items are all needed when performing the mechanical installation.

The mechanical installation starts by fixing the terminal bases and the COMBITEST test switch, when included, on the apparatus bars. Then the COMBIFLEX© units are plugged into the COMBIFLEX© terminal bases. The protection assembly can then be mounted into a frame or case. The following frames and cases are available:

- 19” equipment frame.
- RHGX case.
- RHGS case.

See the technical reference manual for description over the available cases.

All internal protection connections are made and the protection assembly is tested before delivery from factory.

Note!

The length of the EMC-cable must be as short as possible when connecting to EMC-earth. Withstand against electrical disturbances could otherwise be hazarded.

Procedure

1. **Fix the terminal bases on an apparatus bar to make up the protection assembly.**
2. **Plug the COMBIFLEX© units into the terminal bases.**

   Consult the circuit diagram to find out where the units should be plugged. The circuit diagram also gives the height and the width of the protection assembly.

3. **Mount the protection assembly into a desired case.**

   There are three available cases; RHGS 30, RHGX 8 and 19” equipment frames. The protection assembly is inserted and fastened with screws at the backplane of the case.

4. **Connect EMC-earth connection on required units.**

   Connect one part of the EMC-cable at the backplane of the case with a screw, connect a 10 A COMBIFLEX socket on the other part and connect it into the terminal base.

4 Electrical installation

This section contains instructions for the electrical installation.

Before the user can start working the valid circuit diagrams must be available in order to decide how the connections should be made. See the chapter “Protection assemblies and diagrams”. The user must also have the COMBIFLEX© crimping tool and leads with 10 and 20 A COMBIFLEX© sockets available.

The wiring from the cubicle terminals to the COMBIFLEX© terminals on the rear side of the protection assembly must be made in accordance with the established guidelines for this type of equipment. The wires for binary inputs and outputs and the auxiliary supply should be laid separated from the current and voltage transformer cables between the cubicle terminals and the protection terminals.

The external connections to the COMBIFLEX© terminals of the protection assembly shall be made in accordance with the valid terminal diagram. The cables from the transformers should be identified with regards to phases and connected to the proper COMBIFLEX© terminals.

If the protection assembly is provided with a COMBITEST test switch, COMBIFLEX© wires are used for both internal and external connections. Connections to and from the test switch are made with leads with 20A COMBIFLEX© sockets. Leads for internal terminal bases with 10A COMBIFLEX© sockets.

Example

Figure 1 shows an example of the rear of a protection assembly with COMBITEST test switch. Terminal positions are used for internal and external connections.

Each unit in the protection assembly has a unique item designation. The item designations are based on the COMBIFLEX© coordinate system of U and C modules, where the first figure stands for the U module position starting from the top, and the next two figures stand for the C module position, starting from the left-hand side seen from the front side of the protection assembly.

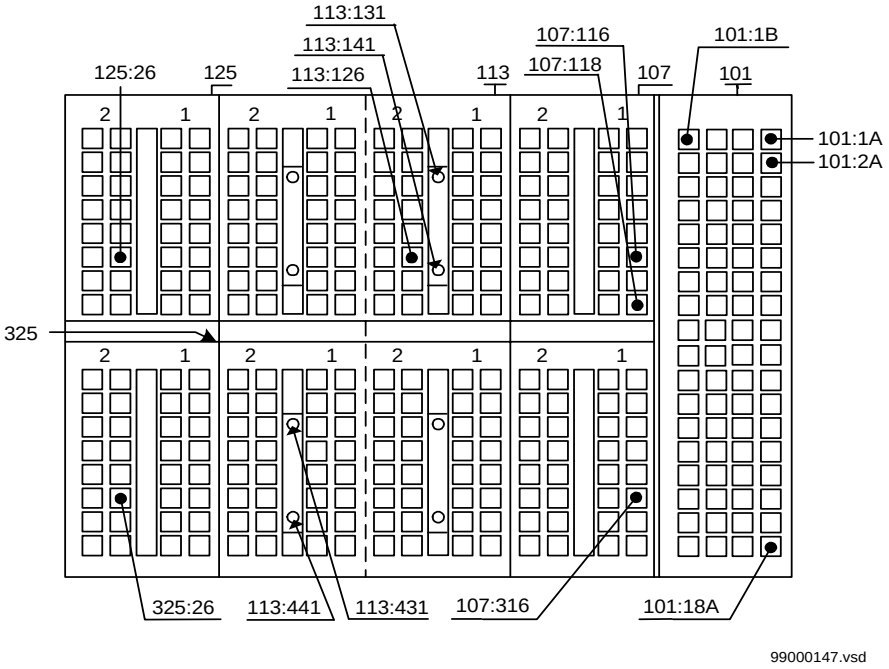

Figure 1: Terminal locations at the rear of a protection assembly.

Procedure

1. **Connect the RTXP test switch to the valid connector with 20 A sockets.**
2. **Connect the external connector to the terminal bases with 10 A sockets.**

See the chapter “Protection assemblies and diagrams” for valid terminal diagrams.

Chapter 4 Commissioning

About this chapter

This chapter contains instructions on how the commissioning of the protection is performed. That is checking external connections, setting and configuring the relay and secondary and primary injection testing. The different instruction sections in this chapter are organized in the order the commissioning work should be performed.

1 Overview

The commissioning work starts by preparing the site for commissioning. A check of the external connections must then be carried out, which includes checking of external circuits and associated equipment, such as transformers, circuit-breakers and signalling equipment. The general relay parameters, the basic protection parameters and each protection function parameter have to be set. The binary I/O signals for the relay must also be configured. All settings must be made through the local human-machine-interface (HMI). Secondary injection testing of the protection assembly is made to verify that all protection functions operate in accordance with the relay setting plan. The primary injection test of the protection assembly is the final check that all external connections are correctly connected. The commissioning work must also be properly documented for future reference. The test records available in this manual can be used.

The following diagram presents the major procedures during commissioning:

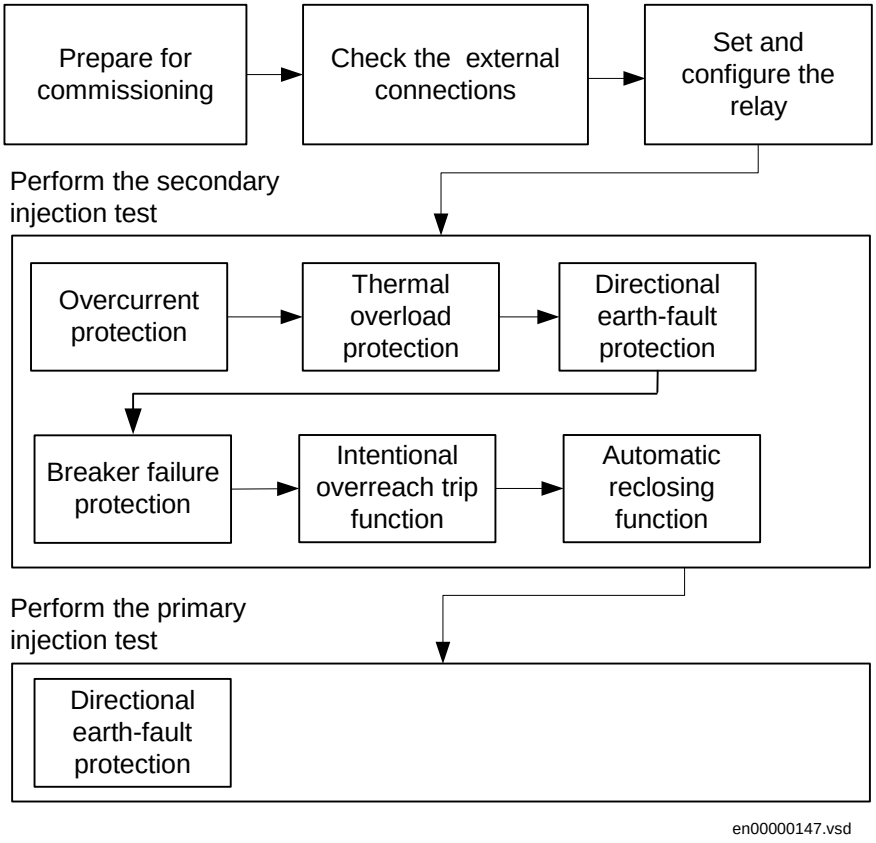

Figure 2: Overview over the major procedures during commissioning.

2 Preparations

Be sure that all necessary documentation and test equipment are available at site before the commissioning work is started up.

Necessary documentation and equipment for commissioning includes:

- Operator's manual if needed. The operator's manual includes general instructions on how to handle the human-machine-interface.
- Valid circuit diagrams and test records are available in this manual.
- Parameter settings values.
- Test equipment with a variable phase current and a time measuring function, SVERKER or similar is recommended.
- Multimeter or ammeter with class 0.5 or better.
- If the line circuit breaker is not available when testing the automatic reclosing function two switches and a bistable relay could be used for simulating the breaker.
- When testing the directional earth-fault protection a resistor of 500 Ω, 25 W and a capacitor of 10 μF is needed.

3 Checking the external connections

3.1 Checking the CT circuits

The CT's must be connected in accordance with the circuit diagram provided with the protection assembly, both with regards to phases and polarity. The following tests are recommended:

Note!

When the excitation characteristic is verified, the primary side of the CT must be an open-circuit and the secondary side disconnected from the relay protection.

- Primary injection test to verify the current ratio and the correct wiring up to the protection assembly for all current transformers and phases.
- Polarity check.
- Check of the ground connection of the CT circuits.
- Check the excitation characteristic of the CT's secondary windings which will verify the data for saturation voltage and chance the performance of the CT.

CT circuits must be properly connected to the station ground and only at one electrical point.

3.2 Checking the VT circuits

The VT's must be connected in accordance with the circuit diagram provided with the protection assembly, both with regards to phases and polarity. The following tests are recommended:

- Primary injection test to verify the voltage ratio and the correct wiring up to the protection assembly.
- Polarity check.
- Check of the ground connection of the VT circuits.

VT circuits must be properly connected to the station ground and only at one electrical point.

3.3 Checking the auxiliary voltage circuits

Check that the auxiliary voltage supplied to the DC/DC-converter is in accordance with the data for the protection assembly and that the voltage has correct polarity.

3.4 Checking the binary input circuits

The user can separately test the internal and external cable connections for the binary inputs via the ‘Test’ menu in the local HMI.

Check the connections to the digital inputs so that both input levels and polarity are in accordance with protection assembly specifications. Verify a binary input by energizing it and overview the status through the ‘Test’ menu.

Parameter	Let you...
BinIn: 123456	Verify the binary input signal, the figure will be filled when the input is energized.

3.5 Checking the binary output circuits

The user can separately test the internal and external cable connections for the binary outputs via the ‘Test’ menu in the local HMI.

Check the connections to the digital outputs so that both output loads and polarity are in accordance with protection assembly specifications. Verify the function of a binary output signal by triggering the selected output in the ‘Test’ menu and overview the output contact status.

Parameter	Let you...
BinOut: 123456789	Verify the triggering of selected output (relay) by pressing the E button.

3.6 Checking the trip circuits and circuit-breakers

The trip circuits are tested as part of the secondary injection test.

4 Retrieving general relay data

This section describes how the user can retrieve data about the relay, such as the article number, rated current and version number.

Procedure

1. **Browse to the ‘Information’ menu.**
2. **Select one of the following information items.**

Table 1: Information items about the relay

Information	Description
1MRK XXX XXX-XX	Article number, relay.
I_r: XA	Rated current.
IN_r: XA	Rated neutral current.
UN_r: 110V	Rated neutral voltage.
Opt: AutoRec	Automatic reclosing option is included.
Opt: BinI/O	Binary I/O option is included.
VerNo: X.X-X	Version number of the relay.
SerNo: PXXXXXX	Serial number of the relay.

3. **Leave the menu by pushing the ‘C’ button.**

5 Setting the general relay parameters

5.1 Selecting HMI language

This section describes how to change the language appearing on the local human-machine-interface (HMI).

You can change the language appearing on the local-HMI by using the ‘Lang/Språk’ menu.

Procedure

1. **Browse to the ‘Lang/Språk’ menu.**

   The ‘Lang/Språk’ menu is available in the local HMI under:

   Lang/Språk

2. **Select language.**

Table 2: Setting parameter, language

Parameter	Range	Unit	Default	Let you...
Language	English, Svenska	-	English	Select HMI language

3. **Leave the menu and confirm your setting.**

5.2 Changing the HMI appearance

This section describes how you can change the appearance of the display and the behavior of the LED’s on the local human-machine-interface (HMI).

You can change the contrast and time-out for the display (30 min). You can also change function for the LED’s.

5.2.1 Changing the appearance of the display

Procedure

1. **Browse to the ‘Display’ menu.**

   The ‘Display’ menu is available in the local HMI under:

HMI
Display

2. **Change the parameter value.**

   Use the left or right arrow-button to define a value. The following values have to be set:

Table 3: Setting parameter, contrast of the HMI

Parameter	Range	Unit	Default	Let you...
Contr	0 - 100	%	50 %	Select the display contrast, 0 - 100 %
Show	Limit/ Unlimit	-	Limit	Select display time-out limit (30 min) or unlimited

3. **Leave the menu and confirm your settings.**

5.2.2 Select function for the LED's

Procedure

1. **Browse to the 'Indications' menu.**

   The 'Indications' menu is available in the local HMI under:

HMI
Indications

2. **Change the parameter value.**

   Use the left or right arrow-button to define a value. The following values have to be set:

Table 4: Setting parameter, function of the LED's

Parameter	Range	Unit	Default	Let you...
Start	Remain, Return	-	Return	Select start LED to remain or not (return).
Trip	Remain, Return	-	Remain	Select trip LED to remain or not (return).

3. **Leave the menu and confirm your settings.**

6 Setting the basic protection parameters

6.1 Setting the rated system frequency

The rated frequency for the relay is set through the ‘BasicSetting’ menu in the local human-machine-interface (HMI).

Procedure

1. **Browse to the ‘Frequency’ menu.**

   The ‘Frequency’ menu is available in the local HMI under:

   Settings
   BasicSetting
   Frequency

2. **Enter the rated frequency for the relay.**

Table 5: Rated system frequency

Parameter	Range	Unit	Default	Let you...
Freq	50/60	Hz	50 Hz	Select the rated frequency.

3. **Leave the menu and confirm your setting.**

6.2 Setting the main CT Ratio

The current ratio of the main CT’s for all phases and neutral are set through the ‘BasicSetting’ menu in the local human-machine-interface (HMI).

Procedure

1. **Browse to the ‘MainCTRatio’ menu.**

   The main CT ratio for the ‘Phase’ and ‘EarthFault’ transformers is available in the local HMI under:

Settings
BasicSetting
MainCTRatio
Phase
EarthFault

2. **Enter the primary and secondary current values of the main CT's.**

Table 6: Main CT Ratio

Parameter	Range	Unit	Default	Let you...
Primary	1.00 - 999	A	1.00 A	Select the primary rated value of the phase CT's and the earth-fault CT
	1.00 - 100	kA	-	
Secondary	0.40 - 10.0	A	1.00 A	Select the secondary rated value of the phase CT's and the earth-fault CT

3. **Leave the menu and confirm your setting.**

6.3 Setting the main VT Ratio

The voltage ratio of the main VT´s for neutral point voltage are set through the 'Basic-Setting' menu in the local human-machine-interface (HMI).

Procedure

1. **Browse to the 'MainVTRatio' menu.**

   The main VT ratio for 'EarthFault' transformers is available in the local HMI under:

   Settings
   BasicSetting
   MainVTRatio
   EarthFault

2. **Enter the primary and secondary voltage values of the main VT´s.**

Table 7: Main VT Ratio

Parameter	Range	Unit	Default	Let you...
Primary	1.00 - 999	kV	1.00 kV	Select the primary rated value of the VT´s
Secondary	10.0 - 999	V	-	Select the secondary rated value of the VT´s
	1.00	kV	1.00 kV	

3. Leave the menu and confirm your setting.

6.4 Selecting active group

Active setting group for the relay is set through the ‘ActiveGroup’ menu in the local human-machine-interface (HMI).

Procedure

1. Browse to the ‘ActiveGroup’ menu.

The ‘ActiveGroup’ menu is available in the local HMI under:

Settings
ActiveGroup

2. Select which group to be active.

Table 8: Setting parameters, active setting group

Parameter	Range	Unit	Default	Let you...
Active group	Group1, Group2	-	Group1	Select active group 1 or group 2 [a)]

a) Default settings for setting group 2 are the same as for group 1.

3. Leave the menu and confirm your setting.

7 Setting the protection function parameters

7.1 Overcurrent protection

The setting parameter values for the overcurrent protection are set through the ‘Over-Current’ menu in the local human-machine-interface (HMI).

Procedure

1. **Browse to the ‘OverCurrent” menu.**

   The ‘OverCurrent’ menu is available in the local HMI under:

   Settings
   Functions
   Group1
   OverCurrent

2. **Enter a value for each parameter.**

   Use the left or right arrow-button to define a parameter value. The following values have to be set:

Table 9: Setting parameters for overcurrent protection

Parameter	Range	Unit	Default	Let you...
I>	On - Off	-	On	Select low set stage I> to be active or not.
I>	0.2 - 3.0 x I_r	A	0.2 x I_r	Set operate level.
Char	NI, VI, EI, LI, RI, Def	-	Def	Select time characteristic, inverse or definite time.
KValue	0.05 - 1.10	-	-	Set time multiplier for inverse time function.
MinTime	0.00 - 2.00	s	-	Set minimum definite time delay for inverse time characteristic.
Time	0.00 - 20.0	s	0.00 s	Set definite time delay.
ResetT	0.00 - 500	s	0.00 s	Set linear reset time on I>.
I>>	On - Off	-	On	Select medium set stage I>> to be active or not.
I>>	1.0 - 20 x I>	A	1.0 x I>	Set operate level.

Parameter	Range	Unit	Default	Let you...
Time	0.00 - 20.0	s	0.00 s	Set definite time delay.
I>>>	On - Off	-	On	Select high set stage I>>> to be active or not.
I>>>	1.0 - 20 x I>	A	1.0 x I>	Set operate level.
Time	0.00 - 20.0	s	0.00 s	Set definite time delay.

3. **Leave the menu and confirm your settings.**

   You can choose the active group for which the settings should be valid. Use the up- or down-arrow button to select active group.

7.2 Thermal overload protection

The setting parameter values for the thermal overload protection are set through the ‘OverCurrent’ menu in the local human-machine-interface (HMI).

Procedure

1. **Browse to the ‘OverCurrent” menu.**

   The ‘OverCurrent’ menu is available in the local HMI under:

   Settings
   Functions
   Group1
   OverCurrent

2. **Enter a value for each parameter.**

   Use the left or right arrow-button to define a value. The following values have to be set:

Table 10: Setting parameters for thermal overload protection

Parameter	Range	Unit	Default	Let you...
IΘ>	On - Off	-	On	Select the thermal function to be active or not.
IΘ>	0.5 - 1.0 x I>	A	0.5 x I>	Set operate level.
Tau	0 - 120	min	0 min	Set thermal time constant

Parameter	Range	Unit	Default	Let you...
Θ>Alarm	40 - 200	%	95 %	Set alarm level content.
Θ>Trip	40 - 200	%	100 %	Set trip level content.
StUpΘ	0 - 99	%	80 %	Set thermal start-up content during power-on.

3. Leave the menu and confirm your settings.

You can choose the active group for which the settings should be valid. Use the up- or down-arrow button to select active group.

7.3 Directional earth-fault protection

The setting parameter values for the directional earth-fault protection are set through the ‘Directional EF’ menu in the local human-machine-interface (HMI).

Procedure

1. Browse to the ‘Directional EF’ menu.

The ‘Directional EF’ menu is available in the local HMI under:

Settings
Functions
Group1
Directional EF

2. Enter a value for each parameter.

Use the left or right arrow-button to define a value. The following parameter values have to be set:

Table 11: Setting parameters for directional earth-fault protection

Parameter	Range	Unit	Default	Let you...
α	0 - 90	°	65°	Select characteristic angle of directional earth-fault stages.
$I_{->N}$>	On - Off	-	On	Select low set stage $I_{->N}$> to be active or not.
$I_{->N}$>	Dir, NonDir	-	Dir	Select directional or non-directional operating characteristic.

Parameter	Range	Unit	Default	Let you...
$I_{->N}$>	0.1-2.5 x IN_r	A	0.1 x IN_r	Set operate level.
Char	NI, VI, EI, LI, RI, Log, Def	-	Def	Select time characteristic, inverse, logarithmic or definite time.
KValue	0.05 - 1.10	-	-	Set time multiplier for inverse time function.
	1.00 - 4.00	-	-	Set operate constant for logarithmic time function.
MinTime	0.00 - 2.00	s	-	Set minimum definite time delay for inverse time function.
	1.00 - 2.00	s	-	Set minimum definite time delay for logarithmic time function.
Time	0.00 - 20.0	s	0.00 s	Set definite time delay.
ResetT	0.00 - 500	s	0.00 s	Set linear reset time on $I_{->N}$>.
$I_{->N}$>>	On - Off	-	On	Select medium set stage $I_{->N}$>> to be active or not.
$I_{->N}$>>	Dir, NonDir	-	Dir	Select directional or non-directional operating characteristic.
$I_{->N}$>>	1.0-20 x $I_{->N}$>	A	1.0 x $I_{->N}$>	Set operate level.
Time	0.00 - 20.0	s	0.00 s	Set definite time delay.
$I_{->N}$>>>	On - Off	-	On	Select high set stage $I_{->N}$>>> to be active or not.
$I_{->N}$>>>	Dir, NonDir	-	Dir	Select directional or non-directional operating characteristic.
$I_{->N}$>>>	1.0-20 x $I_{->N}$>	A	1.0 x $I_{->N}$>	Set operate level.
Time	0.00 - 20.0	s	0.00 s	Set definite time delay.

3. Leave the menu and confirm your setting.

You can choose the active group for which the setting should be valid. Use the up- or down-arrow-button to select active group.

7.4 Breaker failure protection

The setting parameter values for the breaker failure protection are set through the ‘BreakerFailure’ menu in the local human-machine-interface (HMI).

Procedure

1. **Browse to the ‘BreakerFailure’ menu.**

   The ‘BreakerFailure’ menu is available in the local HMI under:

   Settings
   Functions
   BreakerFailure

2. **Enter a value for each parameter.**

   Use the left or right arrow-button to define a value. The following parameter values have to be set:

Table 12: Setting parameters for breaker failure protection

Parameter	Range	Unit	Default	Let you...
BrkFail	On - Off	-	On	Select breaker-failure function to be active or not.
BF>	50 - 200	%	100 %	Set activation level in percentage of the overcurrent function I>.
BF_N>	50 - 200	%	100 %	Set activation level in percentage of the directional earth-fault function $I_{->N}$>.
Time	0.10 - 1.00	s	0.10 s	Set definite time delay for back-up trip.
I>Tr	On - Off	-	On	Select active or not for I> trip signal.
I>>Tr	On - Off	-	On	Select active or not for I>> trip signal.
I>>>Tr	On - Off	-	On	Select active or not for I>>> trip signal.
Θ>Tr	On - Off	-	On	Select active or not for thermal trip signal.
$I_{->N}$>Tr	On - Off	-	On	Select active or not for $I_{->N}$> trip signal.
$I_{->N}$>>Tr	On - Off	-	On	Select active or not for $I_{->N}$>> trip signal.
$I_{->N}$>>>Tr	On - Off	-	On	Select active or not for $I_{->N}$>>> trip signal.
ExtStart	On - Off	-	On	Select active or not for external start signal.
IntOvTr	On - Off	-	On	Select active or not for intentional over-reach trip signal.

3. **Leave the menu and confirm your settings.**

7.5 Intentional overreach trip function

The setting parameters for the intentional overreach trip function are set through the ‘IntentOvReach’ menu in the local human-machine-interface (HMI).

Procedure

1. **Browse to the ‘IntentOvReach’ menu.**

   The ‘IntentOvReach’ menu is available in the local HMI under:

   Settings
   Functions
   IntentOvReach

2. **Enter a value for each parameter.**

   Use the left or right arrow-button to define a value. The following values have to be set:

Table 13: Setting parameters for intentional overreach trip function

Parameter	Range	Unit	Default	Let you...
IntOvRe	On - Off	-	Off	Select intentional overreach function to be active or not.
Time	0.00 - 10.0	s	0.00 s	Set definite time delay for fuse selectivity.
I>St	On - Off	-	Off	Select active or not for I> start signal.
I>>St	On - Off	-	Off	Select active or not for I>> start signal.
I>>>St	On - Off	-	Off	Select active or not for I>>> start signal.

3. **Leave the menu and confirm your settings.**

7.6 Automatic reclosing function

The setting parameter values for the automatic reclosing function are set through the ‘Settings’ menu in the local human-machine-interface (HMI).

Procedure

1. **Browse to the ‘Settings’ menu from the main menu.**

   The ‘Settings’ menu is available in the local HMI under:

Settings
Functions
AutoReclosing
Settings

2. Enter a value for each parameter.

Use the left or right arrow-button to define a value. The following values have to be set:

Table 14: Setting parameters for automatic reclosing function

Parameter	Range	Unit	Default	Let you...
AutoRec	On - Off	-	Off	Select the automatic reclosing function to be active or not.
ReclT	10.0 - 300	s	10.0 s	Set reclaim time for the reclosing program.
Shot1	0.20 - 60.0	s	0.20 s	Set dead time before first reclosing pulse.
Shot2	1.00 - 300, Off	s	Off	Select off or dead time before second reclosing pulse.
Shot3	1.00 - 300, Off	s	Off	Select off or dead time before third reclosing pulse.
Shot4	1.00 - 300, Off	s	Off	Select off or dead time before fourth reclosing pulse.
I>Tr	On - Off	-	Off	Select active or not for I> trip signal.
I>>Tr	On - Off	-	Off	Select active or not for I>> trip signal.
I>>>Tr	On - Off	-	Off	Select active or not for I>>> trip signal.
$I_{->N}$>Tr	On - Off	-	Off	Select active or not for $I_{->N}$> trip signal.
$I_{->N}$>>Tr	On - Off	-	Off	Select active or not for $I_{->N}$>> trip signal.
$I_{->N}$>>>Tr	On - Off	-	Off	Select active or not for $I_{->N}$>>> trip signal.
IntOvTr	On - Off	-	Off	Select active or not for intentional overreach trip signal.

3. Leave the menu and confirm your settings.

8 Configuring the relay

8.1 Configure the binary input and output signals

This section describes how the configuration menu is used when configuring the parameters for the binary input and output signals.

8.1.1 Binary input signals

Procedure

1. **Browse to the 'BinaryInputs' menu.**

   The 'BinaryInputs' menu is available in the local HMI under:

   Configuration
   BinaryInputs

2. **Select binary input for function signals.**

   Use the left or right arrow button to mark a binary input.

Table 15: Input signals, overcurrent protection

Signal	Default	Description
I> Block/Enable	-	Active signal blocks or enables the low set overcurrent stage I>
I>> Block/Enable	-	Active signal blocks or enables the medium set overcurrent stage I>>
I>>> Block/Enable	-	Active signal blocks or enables the high set overcurrent stage I>>>

Table 16: Input signals, thermal overload protection

Signal	Default	Description
ResetΘ	-	Active signal resets the thermal heat content

Table 17: Input signals, directional earth-fault protection

Signal	Default	Description
$I_{->N}$> Block/Enable	-	Active signal blocks or enables the low set directional earth-fault current stage $I_{->N}$>
$I_{->N}$>> Block/Enable	-	Active signal blocks or enables the medium set directional earth-fault current stage $I_{->N}$>
$I_{->N}$>>> Block/Enable	-	Active signal blocks or enables the high set directional earth-fault current stage $I_{->N}$>

Table 18: Input signals, breaker failure protection

Signal	Default	Description
BFExtStart	-	Active external signal starts the breaker failure protection

Table 19: Input signal, indications

Signal	Default	Description
ResetLED	-	Active signal resets LED's, clears recorded disturbances and trip values

Table 20: Input signal, active setting group

Signal	Default	Description
ChActGrp	-	Active signal changes active setting group

Table 21: Input signals, automatic reclosing function

Signal	Default	Description
ARExtOn	-	Active signal enables the automatic reclosing function
CBClosed [a)]	-	Active signal when circuit-breaker is closed
CBReady [a)]	-	Active signal when circuit-breaker is ready
ARBlock	-	Active signal blocks the automatic reclosing function

a) Unconfigured signal reads as TRUE by the function.

3. **Leave the menu and confirm your settings.**

8.1.2 Binary output signals

Procedure

1. **Browse to the 'BinaryOutputs' menu.**

   The 'BinaryOutputs' menu is available in the local HMI under:

   Configuration
   BinaryOutputs

2. **Select binary output for function signals.**

   Use the left or right arrow-button to mark a binary output.

Table 22: Output signals, overcurrent protection

Signal	Default	Description
I>St	Relay 1	Start signal from low set overcurrent stage I>
I>Tr	Relay 2	Trip signal from low set overcurrent stage I>
I>>St	Relay 1	Start signal from medium set overcurrent stage I>>
I>>Tr	Relay 2	Trip signal from medium set overcurrent stage I>>
I>>>St	Relay 1	Start signal from high set overcurrent stage I>>>
I>>>Tr	Relay 2	Trip signal from high set overcurrent stage I>>>

Table 23: Output signals, thermal overload protection

Signal	Default	Description
Θ>Al	Relay 3	Alarm signal from thermal overload stage
Θ>Tr	Relay 2	Trip signal from thermal overload stage

Table 24: Output signals, directional earth-fault protection

Signal	Default	Description
$I_{->N}$>St	Relay 1	Start signal from low set directional earth-fault current stage $I_{->N}$>
$I_{->N}$>Tr	Relay 2	Trip signal from low set directional earth-fault current stage $I_{->N}$>
$I_{->N}$>>St	Relay 1	Start signal from medium set directional earth-fault current stage $I_{->N}$>>
$I_{->N}$>>Tr	Relay 2	Trip signal from medium set directional earth-fault current stage $I_{->N}$>>
$I_{->N}$>>>St	Relay 1	Start signal from high set directional earth-fault current stage $I_{->N}$>>>
$I_{->N}$>>>Tr	Relay 2	Trip signal from high set directional earth-fault current stage $I_{->N}$>>>

Table 25: Output signals, breaker failure protection

Signal	Default	Description
BFReTr	Relay 2	Re-trip signal when external input is activated
BFBckUpTr	Relay 4	Back-up trip signal to adjacent circuit-breakers

Table 26: Output signal, active setting group

Signal	Default	Description
Group2Act	-	Active signal when Group2 is selected

Table 27: Output signal, self-supervision function

Signal	Default	Description
InService	Relay 5	Active signal when relay is in normal service

Table 28: Output signal, intentional overreach trip function

Signal	Default	Description
IntOvTr	-	Trip signal for intentional overreach trip function

Table 29: Output signals, automatic reclosing function

Signal	Default	Description
AROn	-	Automatic reclosing function is on
ARReady	-	Automatic reclosing function is ready
ARStarted	-	Automatic reclosing program is started
ARCloseCB	-	Automatic reclosing pulse to circuit-breaker
ARUnsucce	-	Unsuccessful reclosing

3. Leave the menu and confirm your settings.

9 Secondary injection testing

9.1 Overview

The testing requires a good understanding of the protection functions and the configured functional logic in the relay. The relay must be properly set and configured according to previous sections before any of these instructions could be carried out. The plastic cover which covers the relay must also be removed.

Secondary injection testing is a normal part of the commissioning work. The operating values for all protection functions, the output to the proper trip and alarm contacts and the operation of digital input signals are checked and documented for future reference. The test records available in this manual can be used. See the chapter “Test records”.

The connection of the test set to the protection assembly is greatly simplified if the RTXP 18 test switch is included. When the test handle RTXH 18 is inserted in the test switch, preparations for testing are automatically carried out in the proper sequence, that is blocking of the tripping circuits, short-circuiting of the current circuits on the transformer side, opening of the current transformer circuits and making relay accessible from the terminals on the test plug handle.

If the protection assembly is not provided with a test switch the protection must be tested via the external circuit terminals. Make sure that the instrument transformers are isolated from the circuits connected to the test set.

A secondary test instruction is given for each type of protection function. The testing is performed in a sequence which secures that the blocked stage is released and tested. Blocking and releasing of stages are made in the setting menu and can be done in the local human-machine-interface (HMI).

Blocking or release of protection functions from digital input(s) shall, when included, be checked as a part of the secondary testing of the individual protection functions.

Warning!

Never plug or withdraw a relay from the terminal base without blocking the output circuits or interrupting the auxiliary DC supply. Otherwise there is a risk of unwanted operations.

Note!

The protection assembly is designed for a maximum continuous current of four times rated value.

9.2 Testing the second setting group

Secondary testing of all functions in one setting group should be performed before starting to test the other group.

9.3 Checking the trip circuits

Check that the circuit-breakers of the protective object operates when the tripping relays are activated. The trip relays are conveniently activated by secondary injection to activate a suitable protection function.

9.4 Overcurrent protection

Procedure

1. **Connect the test set for injection of a current in phase IL1.**
2. **Increase the current in phase IL1 until the low set stage operates.**
3. **Decrease the current slowly and note the reset value.**
4. **Block medium and high set stages (I>> and I>>>) if the injected current will activate the medium and high set stages when testing the low set stage according to below.**
5. **Connect a trip output contact to the timer.**
6. **Set the current to 130% of the operate value for the low set stage, switch on the current and check the time delay.**

   For inverse time curves, check the operate time at a current equal to 200% of the operate current.

7. **Check that start and trip contacts operate according to the configuration logic.**
8. **Check the indications menu which is provided with information about operated functions and also the stored primary trip currents.**

   Check that no unwanted operations have occurred.

9. **Check in the same way the function for the other phases (step 1-8 above).**
10. **Block I> and release the blocking of the medium set stage (I>>).**
11. **Check the operate and reset value and the time delay for the medium set stage in the same way as for the low set stage (step 1-9 above).**
12. **Check in the same way the function of the high set stage (I>>>) when I> and I>> are blocked (step 1-9 above).**
13. **Release the blocking of the low and medium stage according to configuration logic.**

9.5 Thermal overload protection

Procedure

1. **Connect the test set for injection of a current in phase IL1.**
2. **Connect a binary input to reset the internal thermal heat content.**
3. **Set the time constant τ temporarily to 0 minute.**
4. **Increase the current in phase IL1 and note the operate values of both the alarm and the trip level.**
5. **Decrease the current slowly and note the reset values.**
6. **Check in the same way the operate and reset values of the functions above for the other phases (step 1-4 above).**
7. **Set the time constant τ in accordance with the relay setting plan.**
8. **Connect an alarm output contact to the timer.**
9. **Select a suitable current level from the table according to the thermal constant τ. Switch on the current and check the time delay for the alarm function.**

   Check the service values menu which is provided with information about the actual thermal heat content.

Injected current	Operate time
1.26 times set operate level, I_b $I_b = I\Theta > \times \sqrt{\Theta_{set} / 100}$ Θ_{set} = thermal alarm or trip level	$t = \tau$
3.24 times set operate level, I_b	$t = \tau / 10$
4.53 times set operate level, I_b	$t = \tau / 20$

10. **Check that alarm and trip contacts operate according to the configuration logic.**
11. **Check the indications menu which is provided with information about operated functions and also the stored primary trip currents.**

    Check that no unwanted operations have occurred.

12. **Activate the binary input for reset of the internal thermal heat content.**
13. **Check in the same way the time delay for the trip function (step 7-11 above).**
14. **Check in the same way the function for the other phases. (step 8-10 above).**

9.6 Directional earth-fault protection

The neutral point voltage enables the directional earth-fault protection when the polarising voltage is above 0.5 % of the rated neutral voltage UN_r. When the phase angle φ of the polarising voltage relative the injection current is equal to the set characteristic angle α of the directional earth-fault protection, the operate value is equal to set level.

Figure 3 shows a recommended test set-up for testing the directional earth-fault current stages with a polarising voltage.

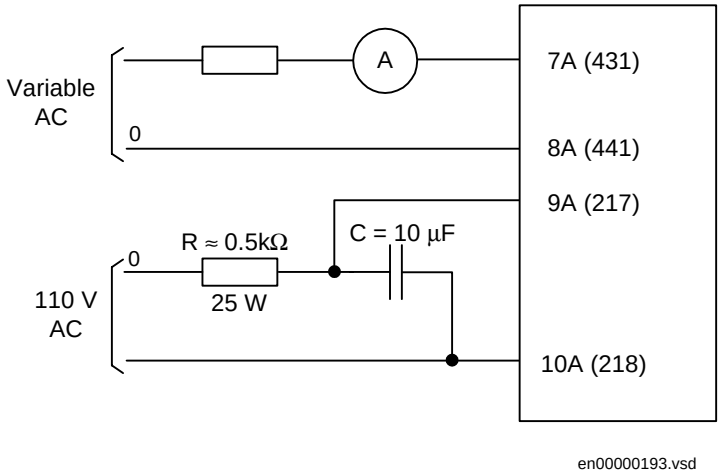

Figure 3: Test set-up for the directional earth-fault current stages.

Note!

The calculated phase angle φ between U_N and I_N is positive when I lags U.

9.6.1 Directional earth-fault protection.

Procedure

1. **Connect the test set for injection of a polarising voltage in U_N and a current in I_N.**
2. **Increase the current in I_N until the low set stage operates.**

   Directional earth-fault stage operates when I x cos (φ-α) is equal or higher than set operate value. At this test set-up the phase angle φ is approximately 125°.

3. **Decrease the current slowly and note the reset value.**
4. **Block medium and high set stages ($I_{->N}$>> and $I_{->N}$>>>) if the injected current will activate the medium and high set stages when testing the low set stage according to below.**
5. **Connect a trip output contact to the timer.**
6. **Set the current to 130% of the operate value for the low set stage, switch on the current and check the time delay.**

   For inverse time curves, check the operate time at a current equal to 200% of the operate current.

7. **Check that start and trip contacts operate according to the configuration logic.**
8. **Check the indications menu which is provided with information about operated functions and also the stored primary trip values.**

   Check that no unwanted operations have occurred.

9. **Block $I_{->N}$> and release the blocking of the medium set stage ($I_{->N}$>>).**
10. **Check the operate and reset value and the time delay for the medium set stage in the same way as for the low set stage (step 2-8 above).**
11. **Check in the same way the function of the high set stage ($I_{->N}$>>>) when $I_{->N}$> and $I_{->N}$>> are blocked (step 2-8 above).**
12. **Release the blocking of the low and medium set stage according to the configuration logic.**

9.7 Breaker failure protection

9.7.1 Verify the activation level with external start

Procedure

1. **Connect the test set for injection of a current in phase IL1.**
2. **Energize the binary input continuously, increase the current in phase IL1 until the back-up trip function operates.**
3. **Decrease the current slowly and note the reset value.**
4. **Check in the same way the function for the other phases (step 1-3 above).**
5. **Check in the same way the function for the neutral current I_N (step 1-3 above).**

9.7.2 External start of the breaker-failure function

Procedure

1. **Check the instantaneous re-trip function when a pulse is applied to the binary input for external start.**
2. **Connect the test set for injection of a current in phase IL1.**
3. **Connect a trip output contact to the timer.**
4. **Set the current to 80% of the activation value, switch on the binary input and check that no back-up trip signal is achieved.**

5. **Set the current to 120% of the activation value, switch on the binary input and check the time delay for the back-up trip signal.**
6. **Check that re-trip and back-up trip contacts operate according to the configuration logic.**
7. **Check the indications menu which is provided with information about operated functions.**

   Check that no unwanted operation have occurred.

8. **Check in the same way the function for the other phases (step 2-7 above).**
9. **Check in the same way the function for the neutral current I_N (step 2-7 above)**

9.7.3 Internal start of the breaker failure protection

Procedure

1. **Connect the test set for injection of a current in phase IL1.**
2. **Connect a trip output contact to the timer.**
3. **Set the current to 110% of the operate value for the function which activates the breaker-failure protection, switch on the current and check the time delay for the back-up trip signal.**

   Measured time includes also trip time from the function which started the breaker-failure protection.

4. **Check that back-up trip contact operates according to the configuration logic.**
5. **Check the indications menu which is provided with information about operated functions.**

   Check that no unwanted operation have occurred.

6. **Check in the same way that the breaker-failure protection can be activated from all selected internal inputs (step 1-5 above).**
7. **Check in the same way the function for the other phases (step 1-6 above).**
8. **Check in the same way the function for the neutral current I_N (step 1-6 above).**

9.8 Intentional overreach trip function

This section contains testing procedures for the intentional overreach trip function when a bistable relay is simulating the line circuit breaker. The procedures are also valid when line circuit breakers are used.

The test set-up for the intentional overreach trip function is the same as for the automatic reclosing function. Connections are shown in the testing section for the automatic reclosing function.

Procedure

1. **Connect the test set for injection of a current in phase IL1.**
2. **Connect a trip output contact to the timer.**
3. **Activate a pulse with the SC-switch to pick-up the BR (closing circuit-breaker).**
4. **Close SRY-switch (circuit-breaker ready) and leave it closed.**
5. **Set the current to 110% of the operate value for the overcurrent function which first activates the intentional overreach trip function.**
6. **Switch on the current and check the time delay for the intentional overreach trip signal.**

   The trip signal activates the automatic reclosing function, observe the (BR) operation. The (BR) relay should trip and reclose. After the reclosing operation the SRY-switch could be opened for about 5 s and then closed.

   Switch on the injected current again, before the reclaim has expired. At this moment the intentional overreach will not operate. The activation of the automatic reclosing function will be made by the delayed trip signal from the overcurrent function.

   Measured time includes also trip time from the overcurrent function which started the intentional overreach trip function.

   Should the operation not be as expected, the reason must be investigated. It could be due to a wrong internal activation signal or configuration.

7. **Check that intentional overreach trip contact operates according to the configuration logic.**
8. **Check the indications menu which is provided with information about operated functions.**

   Check that no unwanted operation have occurred.

9. **Check in the same way that the intentional overreach trip function can be activated from all selected internal inputs (step 1-8 above).**

9.9 Automatic reclosing function

This section contains testing procedures for the automatic reclosing function when a bistable relay is simulating the line circuit breaker. The procedures are also valid when line circuit breakers are used.

Figure 4 shows a recommended test set-up when the line circuit breaker could not be used. For simulating the line circuit breaker (BR) a bistable relay, for example, RXMVB2 or a RXMD1, could be used. If no bistable relay is available, replace it with two self-reset auxiliary relays.

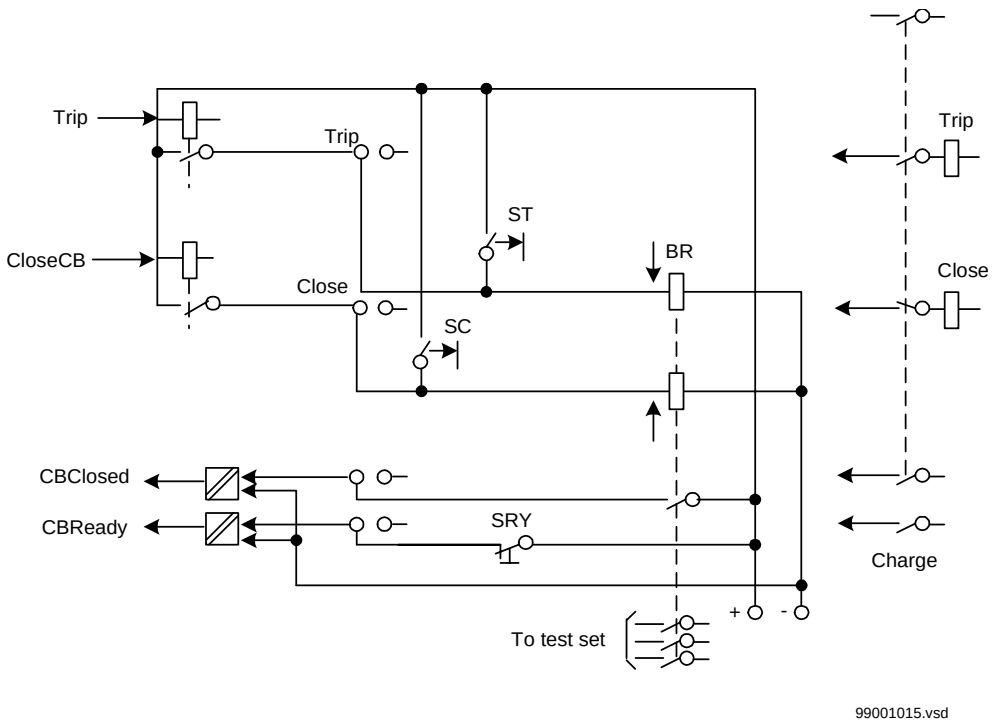

Figure 4: Automatic reclosing test with a bistable relay.

Trip switch (ST) and closing switch (SC) can be push-buttons with spring return.

It is possible to use the (BR) to control the injected current so the fault only appears when the (BR) is picked-up, simulating a closed breaker position.

Simulation of the gear operation (CBReady) for the sequences Close-Open (CO) or Open-Close-Open (OCO) the SRY switch could be used as in figure 4.

Procedure

1. **Connect the test set for injection of a current in phase IL1.**
2. **Connect a reclosing output contact to the timer.**
3. **Activate a pulse with the SC-switch to pick-up the BR (closing circuit-breaker).**
4. **Close SRY-switch (circuit-breaker ready) and leave it closed.**
5. **Set the current to 110% of the operate value for the function which activates the automatic reclosing function.**

   Switch on the current and observe the (BR) operation. The (BR) relay should trip and reclose. After the reclosing operation the SRY-switch could be opened for about 5 s and then closed.

   Measured time includes also trip time from the protection function which started the automatic reclosing function.

   Should the operation not be as expected, the reason must be investigated. It could be due to a wrong internal activation signal or configuration.

6. **Switch on the injected current again, before the reclaim has expired, if more than one reclosing shot is selected.**

   Observe the (BR) operation again in the same way as in step 5. Repeat this test until all shots have been performed.

7. **Check that the automatic reclosing pulse contact operates according to the configuration logic.**
8. **Check the indications and the reclosing counters menu which is provided with information about operated functions.**

   Check that no unwanted operation have occurred.

9. **Check in the same way that the automatic reclosing function can be activated from all selected internal inputs (step 1-8 above).**
10. **Check reclosing requirement, circuit-breaker open: Set the circuit-breaker simulating relay (BR) in position open. Then close it with the SC-switch and after 1 s activate the automatic reclosing function, no operation!**

11. **Check reclosing requirement, circuit-breaker not ready: Close the circuit-breaker simulating relay (BR) and see that everything except for CBReady is in normal conditions (SRY-switch is open). Activate the automatic reclosing function, no operation!**

10 Primary injection testing

10.1 Overview

The primary injection test constitutes a final check that voltage and current circuits are correctly connected to the protection assembly.

10.2 Directional earth-fault protection

A directional test of the earth-fault protection should always be performed before the relay protection is taken into service. To perform this test, the protected line must be in service and carry some active current.

10.2.1 Earth-fault simulation for protections with characteristic angle α = 0° to + 90°.

Procedure

1. **Disconnect phase L1 voltage from the VT open delta.**
2. **Short-circuit the secondary winding of the CT in phase L3 and disconnect it from the relay protection, see figure 5.**

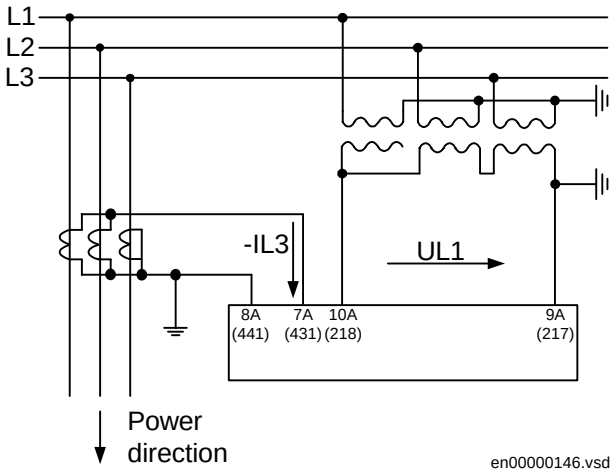

Figure 5: Directional testing of an earth-fault protection with characteristic angle α = 0° to +90°.

An active load current out in the direction of the line will give a current to the protection which lags the polarising voltage by 60°.

A reactive load current out in the direction of the line will give a current which lags the polarising voltage by 150°.

A symmetrical load current will then give operation in the forward direction of the earth-fault protection when:

$$I_{act} \cdot \cos(\alpha\text{-}60) + I_{react} \cdot \sin(\alpha\text{-}60) \geq {}_{set}\, I_{->N}>$$

where:

$I_{->N}>$ = set operate current of the earth-fault protection

I_{act} = P / 3U

I_{react} = Q / 3U

P and Q are defined positive when the active respective reactive power is flowing out into the line and U is the primary phase voltage.

3. **If the load current is flowing in the opposite direction, the polarising voltage UL1 has to be shifted 180° to get the directional earth-fault operation.**
4. **Restore the correct connections after primary testing.**

Chapter 5 Operations during commissioning and maintenance

About this chapter

This chapter contains instructions on operations during commissioning and maintenance, such as reading off service values, disturbance information and reading the total number of reclosing shots.

1 Overview

The relay must be properly set and configured according to previous chapters before any of these instructions could be carried out. The plastic cover which covers the relay must also be removed.

The operations during commissioning and maintenance involve reading off service values, function status and recorded disturbances caused by current injections provided from test equipment.

2 Using the service values menu

2.1 Reading service values

This section describes how to read primary and secondary service values and how to use the service value menu during commissioning and maintenance of the relay.

Press any button except the ‘C’ button to view the main menu. If the ‘C’ button is pressed and a disturbance has been recorded the indication menu will be presented.

2.1.1 Primary service values

Procedure

1. **Browse to the ‘Primary’ menu from the main menu.**

   The ‘Primary’ menu is available in the local HMI under:

   ServiceValues
   Primary

2. **Choose ‘Primary’ menu and then press the ‘E’ button.**

   The display will present the first set of service values.

3. **Press any button on the local HMI to present the second set of service values.**
4. **Press any button on the local HMI to present the status of the automatic reclosing function.**
5. **Press any button on the local HMI to return to the ‘Primary’ menu.**

2.1.2 Secondary service values

Procedure

1. **Browse to the ‘Secondary’ menu from the main menu.**

   The ‘Secondary’ menu is available in the local HMI under:

   ServiceValues
   Secondary

2. **Choose ‘Secondary’ menu and then press the ‘E’ button.**

   The display will present the first set of service values.

3. **Press any button on the local HMI to present the second set of service values.**
4. **Press any button on the local HMI to present the status of the automatic reclosing function.**
5. **Press any button on the local HMI to return to the 'Secondary' menu.**

2.2 Service values menu

The following values are presented when the service value menu is viewed:

Service value		Provides information about
IL1		The actual phase-1 current
IL2		The actual phase-2 current
Θ		The actual thermal heat content
U_N		The actual neutral point voltage
I_N		The actual neutral current
φ		The actual phase angle φ between U_N and I_N is positive when I lags U
Freq		The actual frequency
AutoRec	OFF	Automatic reclosing function is turned off
	Unready	Automatic reclosing function is not ready for a reclosing cycle
	Ready	Automatic reclosing function is ready for a reclosing cycle
	Shot1	Dead-time for shot 1 is counting
	Shot2	Dead-time for shot 2 is counting
	Shot3	Dead-time for shot 3 is counting
	Shot4	Dead-time for shot 4 is counting
	ReclT	Reclaim time is counting
	RclTBlk	Reclaim time is counting and if a a new start occurs the reclosing will be unsuccessful
	Unsucce	Unsuccessful reclosing
	Blocked	Automatic reclosing function is blocked

Service value	**Provides information about**
Shot1	The total numbers of first reclosing attempts
Shot2-4	The total numbers of second to fourth reclosing attempts
Unsucce	The total numbers of unsuccessful reclosing attempts

3 Using the indications menu

3.1 Reading disturbance information

This section described how to read recorded disturbances during commissioning and maintenance of the relay.

The indications menu is used for presenting information when:

- No disturbance has occurred.
- Disturbance has occurred.

3.1.1 No disturbance has occurred

The user can use the ‘Indications’ menu to read function status and active setting group even if no disturbance has occurred.

Procedure

1. **Browse to the ‘Indications’ menu from the main menu.**

   The display will present the status of the overcurrent functions and active setting group.

2. **Press any button on the local HMI.**

   The display presents the remaining status of the overcurrent functions, the thermal overload function and active setting group.

3. **Press any button on the local HMI to present the status of the earth-fault protections.**

   The status of the earth-fault protections and active setting group is presented.

4. **Press any button on the local HMI to present the status of the breaker failure protection and the intentional overreach trip function.**
5. **Press any button on the local HMI to return to the main menu.**

3.1.2 Disturbance has occurred

The user can use the ‘Indications’ menu to read function status, setting groups and recorded primary trip values if a disturbance has occurred.

Procedure

1. **Browse to the ‘Indications’ menu from the main menu.**

   The display will present the status of the overcurrent functions and active setting group

2. **Press any button on the local HMI.**

   The display presents the remaining status of the overcurrent functions, the thermal overload function and active setting group.

3. **Press any button on the local HMI to display the status of the earth-fault protections.**

   The status of the earth-fault protections and active setting group is presented.

4. **Press any button on the local HMI to present the status of the breaker failure protection and the intentional overreach trip function.**
5. **Press any button on the local HMI to present the recorded primary trip values.**
6. **Press the cover-button to present the remaining primary trip values.**
7. **Press any button on the local HMI and the display will present the clearing dialog box.**

   Here the recorded disturbances can be cleared or not.

8. **Press and hold down the ‘C’ button for more than two seconds to clear the disturbances or press any button shortly to not clear the disturbances.**

   If the user choose to clear the disturbances the saved values and LED’s will be cleared and the display returns to the main menu.

3.2 Indications menu

The following indications are presented when the indications menu is entered. Stored primary trip values are always from the last disturbance and will also be presented through this menu.

Indication	Start	Trip	Function description
I>	☐ 1/2	☐ 1/2	Status and active group for overcurrent, low set stage.
	L12		Phase indication which caused the start on I>
I>>	☐ 1/2	☐ 1/2	Status and active group for overcurrent, medium set stage.
	L12		Phase indication which caused the start on I>>
I>>>	☐ 1/2	☐ 1/2	Status and active group for overcurrent, high set stage.
	L12		Phase indication which caused the start on I>>>
Θ>	☐ 1/2	☐ 1/2	Status and active group for thermal overload.
$I_{->N}$>	☐ 1/2	☐ 1/2	Status and active group for directional earth-fault, low set stage.
$I_{->N}$>>	☐ 1/2	☐ 1/2	Status and active group for directional earth-fault, medium set stage.
$I_{->N}$>>>	☐ 1/2	☐ 1/2	Status and active group for directional earth-fault, high set stage.
ReTrip		☐	Status for breaker failure, re-trip.
BckUpTr		☐	Status for breaker failure, back-up trip.
IntOvTr		☐	Status for intentional overreach trip.

Number 1 or 2 (start and trip) above indicates which setting group that was active during the disturbance. All start functions are connected to the yellow LED and all trip functions are connected to the red LED. The appearance of the boxes in the local HMI describes the status of the function.

Filled (black)	Latest recorded event.
Grayed	Previous recorded event.
Blank	No recorded event (since last clearing).

Recorded trip values	**Provides information about**
IL1	The recorded phase-1 current
IL2	The recorded phase-2 current
U_N	The recorded neutral point voltage
I_N	The recorded neutral current
φ	The recorded phase angle φ between U_N and I_N is positive when I lags U

4 Reading the total number of reclosing shots

This section describes how to read the total number of reclosing shots during commissioning and maintenance of the relay.

Procedure

1. **Browse to the ‘Counters’ menu.**

   The ‘Counters’ menu is available in the local-HMI under:

   Settings
   Functions
   AutoReclosing
   Counters

   The window presents counters for shots 1, 2 and 3 separated by:

   - Started by phase (PH) function.
   - Started by earth-fault (EF) function.
   - Started by phase and earth-fault (P+E) function.

2. **Press the down-arrow button to present the remaining shot (4).**

   Also the total unsuccessful reclosings are displayed separated by: started by phase (PH) function, earth-fault (EF) function or phase and earth-fault (P+E) function.

3. **Press the ‘C’ button.**

   A clearing dialog for reclosing counters appears:

YES	The window returns to ‘Counters’ menu and all counters are cleared.
NO	The window returns to ‘Counters’ menu without clearing the counters.
CANCEL	The window returns to the first three counters.

4. **Make your choice and leave the menu.**

Chapter 6 Maintenance

About this chapter

This chapter contains instructions on how the preventive and corrective maintenance is performed. A check-list is provided to facilitate troubleshooting the protection.

1 Overview

Before any of these instructions could be carried out the plastic cover which covers the relay has to be removed.

Under normal operating conditions and when the surrounding atmosphere is of non-corrosive nature no special maintenance is required. Preventive maintenance test of the protection assembly is recommended to be performed every four to five years. The tests can be performed more or less detailed. Instructions from utility power network company and other maintenance directives, valid for maintenance of the power system, must be followed.

Corrective maintenance is required if the protection should be suspected to have made an unwanted operation or, missed to clear a fault situation. In a case of an unwanted or missed fault clearing operation, the check list may help the user to recognize the wrong behavior of the protection assembly. If the check list below does not help, please contact the local ABB office for further technical support.

The measuring relay is provided with self-supervision and require less maintenance than earlier designed relays. The internal self-supervision function with error alarm output supervises:

- Software execution flow by the internal watchdog.
- ROM cell's by the checksum program.
- RAM cell's by RAM cell program.

Warning!

Never plug or withdraw a relay from the terminal base without blocking the output circuits or interrupting the auxiliary DC supply. Otherwise there is a risk of unwanted operations.

Note!

If the LED's are flashing or the green 'In service' LED is dark, an internal fault has occurred. Read the self supervision section in the technical reference manual for further information.

2 Preventive maintenance

2.1 Checking the disturbance information

The indications menu should be checked to identify if any disturbance has occurred. If any fault occurs frequently, some actions may be taken.

2.2 Performing a start-up check

Switch-off and on the auxiliary DC supply to the protection. During the start-up sequence the relay verifies the ROM and RAM cell's. When the green LED lights-up all internal checks are completed and the relay is in normal service again.

2.3 Checking the service values

Verify the presented service values in the local HMI and compare them with the known system values. If they are as expected, the external circuits and the internal measuring in the relay work properly. By using this information the user also is informed about the condition of the measuring transformers.

2.4 Testing the binary inputs

Verify the operation of the binary inputs. In the 'Test' menu the user can overview the status when the input is energized. See chapter "Commissioning" in this manual.

2.5 Testing the binary outputs

Verify the operation of the binary output relays. In the 'Test' menu the user can change the state of the selected output. See chapter "Commissioning" in this manual.

2.6 Dressing burned contacts on the auxiliary tripping relays

In exceptional cases, burned contacts on the auxiliary output relays can be dressed with a diamond file.

2.7 Performing additional tests

Additional tests can be selected from the secondary injection tests. See chapter "commissioning" in this manual.

3 Corrective maintenance

This section contains instructions on how the user can investigate a missed fault clearance or an unwanted operation of the protection assembly.

3.1 Check the green “in service” LED on RXTUG 22H

If the “in service” LED is dark, the self supervision in the DC/DC-converter has recognized an internal fault.

Procedure

1. **Check the connection and polarity of the auxiliary input cables.**
2. **Disconnect the output load from the DC/DC-converter.**
3. **Measure both the input (24-250V DC) and output (+/-24V DC) voltages from the DC/DC-converter.**

3.2 Check the green “in service” LED on the measuring relay

If the “in service” LED is dark or any of the other LED’s are flashing the self supervision in the relay has recognize an internal fault. In the technical reference manual further information about the self supervision function is stated.

Procedure

1. **Check the internal connections between the DC/DC-converter and the measuring relay (+/-24V DC).**

3.3 Check the indications

3.3.1 If the expected protection function has not operated correctly

Procedure

1. **Check the service values in the local HMI.**

   If the service values are not of the right magnitude check that all screws in the COMBIFLEX© relay socket are tightly fastened and also check the internal and external cable connections to the transformers.

2. **Test the binary inputs.**

   Check the connection and polarity of the involved binary inputs. Energize it and overview it by the ‘Test’ menu.

3. **Check the configuration**

   Check that all binary inputs and outputs are correctly configured in the relay according to the relay system plan.

4. **Check the settings**

   Check that all protection settings are correctly implemented in the relay according to the relay system plan.

5. **Check the setting calculations**

   Verify the calculated setting values for the relay according to the network conditions.

3.3.2 If the expected protection function has operated correctly

Procedure

1. **Test the binary outputs.**

   Check the internal connections between the binary output relay and the auxiliary output tripping relay. Check also the external connections from the tripping relay to the circuit-breaker coil.

Chapter 7 Protection assemblies and diagrams

About this chapter

This chapter contains a general description of the protection assemblies. The chapter also contains different terminal and circuit diagrams for the protection assembly.

1 Compact current protection assembly RAHL

The protection assemblies are of protective class I equipment in which protection against electric shock does not rely on basic insulation only, but which includes additional safety precautions in such a way that accessible conductive parts are connected to protective earth. The protections are based on the compact current relay RXHL. Test device RTXP 8, RTXP 18 and DC/DC-converter RXTUG 22H can also be included for specific application requirements. Test device, RTXP 8 and RTXP 18 are tools for relay testing. DC/DC-converter RXTUG 22H can be used either separately for a single protection or to feed other protections of the same relay family. With RXTUG 22H all requirements concerning emission and immunity disturbances with this protection assembly will be met.

The basic version of the measuring relay has 5 binary outputs and 2 binary inputs. The binary I/O option includes 4 additional inputs and 4 additional outputs. Protections are normally available with output logic with heavy duty contacts, relay RXME 18 with indicating flag, and can upon request be completed with an output logic of free choice. Output relays are connected to separate auxiliary voltage. The interface voltage for enable or block impulses can be connected to either 48-60 V DC or 110-220 V DC by connecting the voltage circuit to separate terminals. At delivery all relays are connected for 110-220 V DC.

All the protections in the COMBIFLEX® modular system are mounted on apparatus bars. The connections to the protections are done by COMBIFLEX® socket equipped leads. All internal connections are made and the protection assembly is tested before delivery from factory. The type of modules and their physical position and the modular size of the protection are shown in the diagrams of the respective protection. Figure 6 shows an example of a protection assembly.

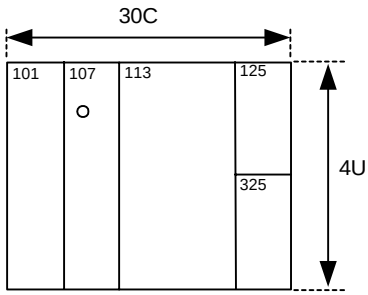

101 RTXP 18
107 RXTUG 22H
113 RXHL
125 RXME 18
325 RXME 18

se980096

Figure 6: Protection assembly example

The height and width of the protection assembly are given in the circuit diagram with height (U) and width (C) modules, where U = 44.45 mm and C = 7 mm. The depth of the protection assembly, including space for the connection wires, is approximately 200 mm.

2 Protection assemblies

The table below shows the different variants of the compact current relay RXHL 422 in protection assemblies type RAHL 422.

RAHL 422 protection assembly variants	Ordering No.	RXHL 422 options	Circuit diagram	Terminal diagram	Available diagrams
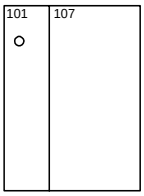 101 RXTUG 22H 107 RXHL	1MRK 001 994-AA	Basic version	1MRK 001 995-AA	1MRK 001 995-AAA	On request
		With binary I/O	1MRK 001 995-AB	1MRK 001 995-ABA	On request
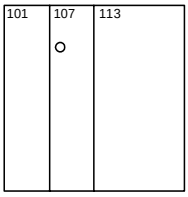 101 RTXP 18 107 RXTUG 22H 113 RXHL	1MRK 001 994-BA	Basic version	1MRK 001 995-BA	1MRK 001 995-BAA	On request
		With binary I/O	1MRK 001 995-BB	1MRK 001 995-BBA	On request
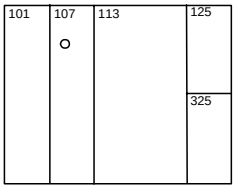 101 RTXP 18 107 RXTUG 22H 113 RXHL 125 RXME 18 325 RXME 18	1MRK 001 994-CA	Basic version	1MRK 001 995-CA	1MRK 001 995-CAA [a]	[b]
		With binary I/O	1MRK 001 995-CB	1MRK 001 995-CBA [a]	[b]

RAHL 422 protection assembly variants	Ordering No.	RXHL 422 options	Circuit diagram	Terminal diagram	Available diagrams
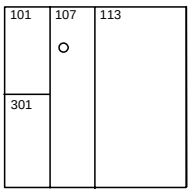	1MRK 001 994-DA	Basic version	1MRK 001 995-DA	1MRK 001 995-DAA	On request
		With binary I/O	1MRK 001 995-DB	1MRK 001 995-DBA	On request

101 RTXP 8
107 RXTUG 22H
113 RXHL
301 RXME 18

a) Terminal diagrams available in technical overview brochure for RXHL 422 and RAHL 422

b) Terminal and circuit diagrams available in installation and commissioning manual for RXHL 422 and RAHL 422

2.1 Mounting alternatives

The protection assemblies described in the table above can be supplied in RHGX or RHGS cases. RXHL 422 compact current relay can also be supplied in the following mounting alternatives.

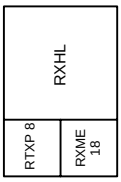

Mounting of RXHL 422 in RHGS 6.

Mounting of RXHL 422 in RHGS 12.

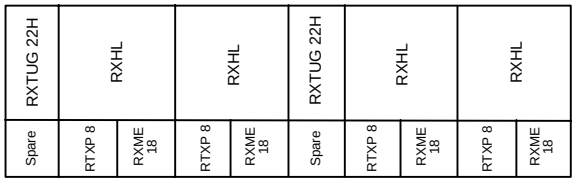

Mounting of RXHL 422 in RHGS 30 with dual power supplies RXTUG 22H, individual test switches and optional tripping relays.

3 Terminal and circuit diagrams

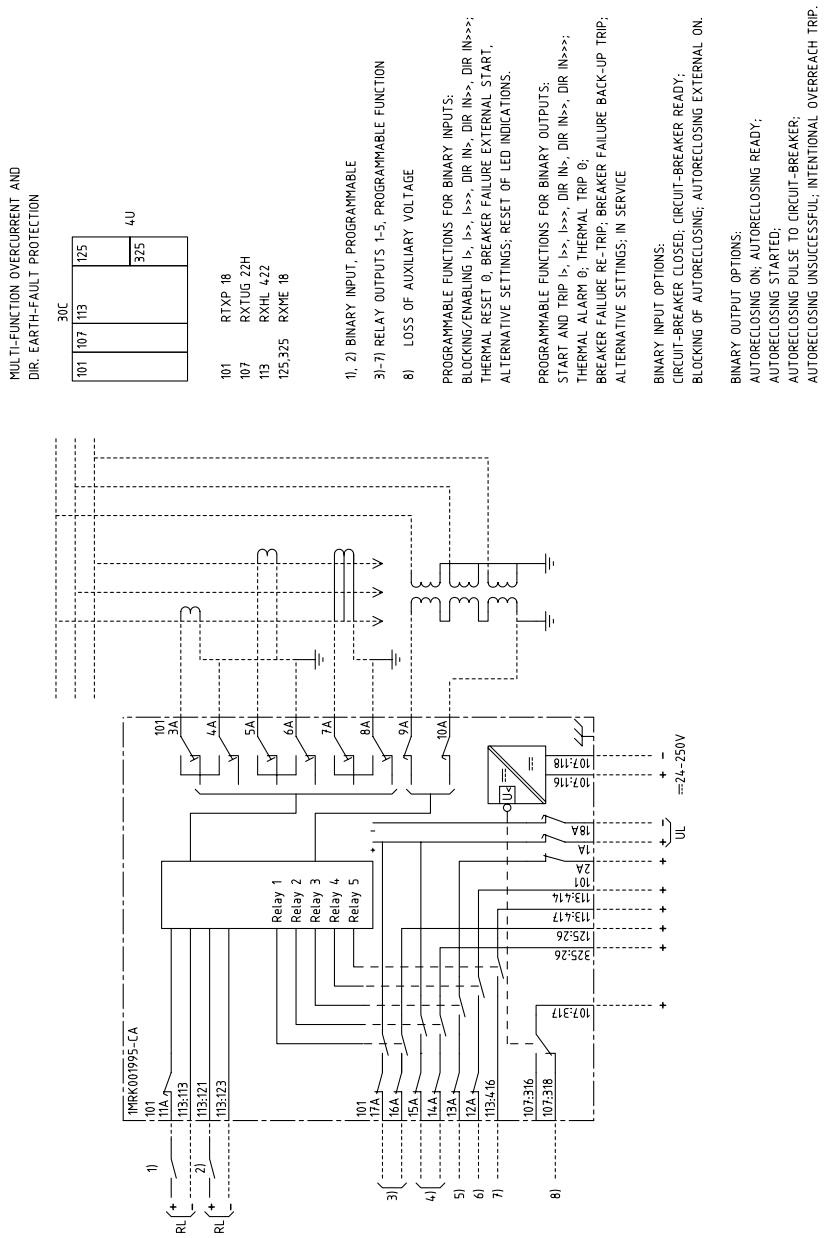

Figure 7: Terminal diagram 1MRK 001 995-CAA

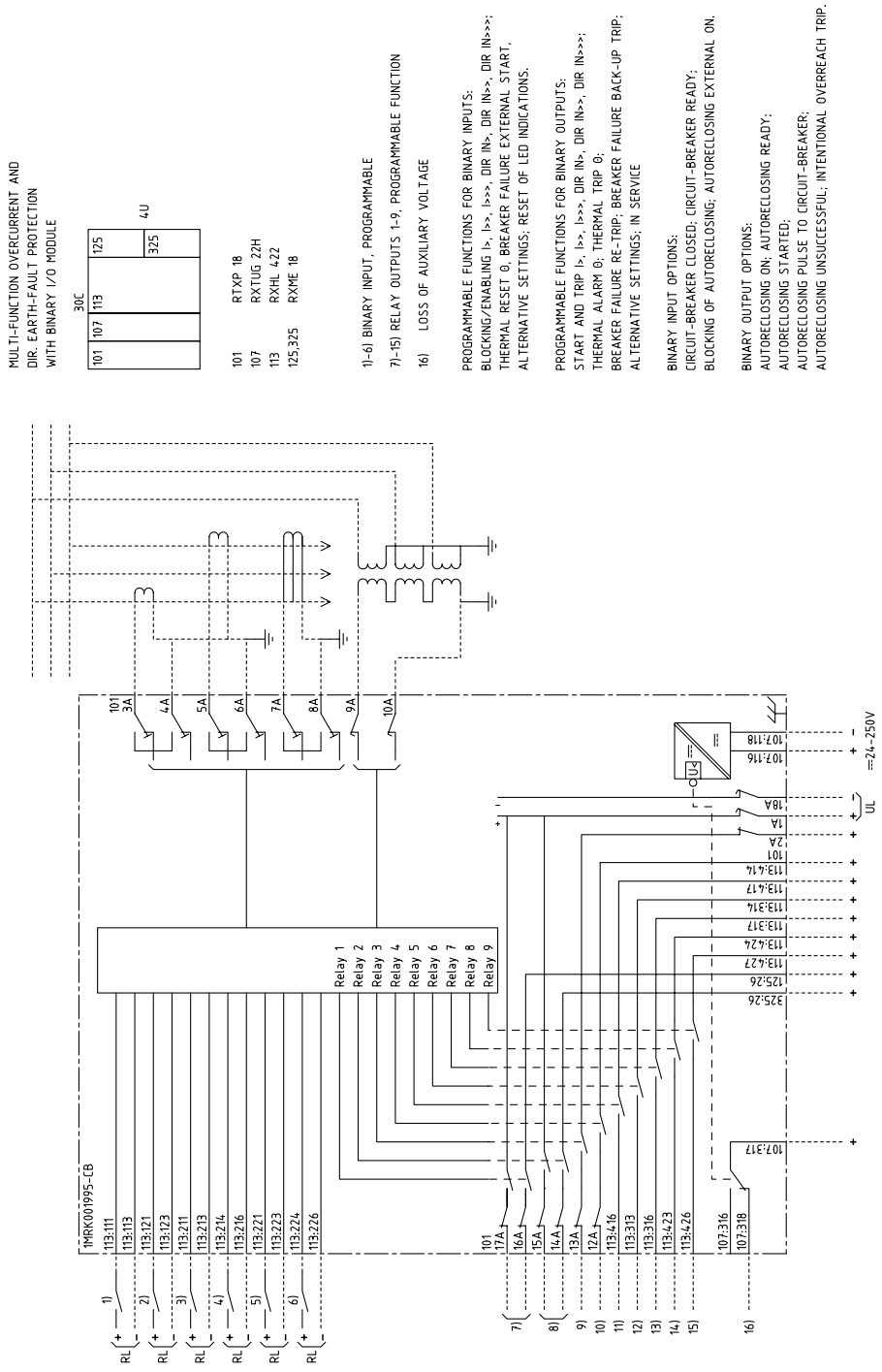

Figure 8: Terminal diagram 1MRK 001 995-CBA

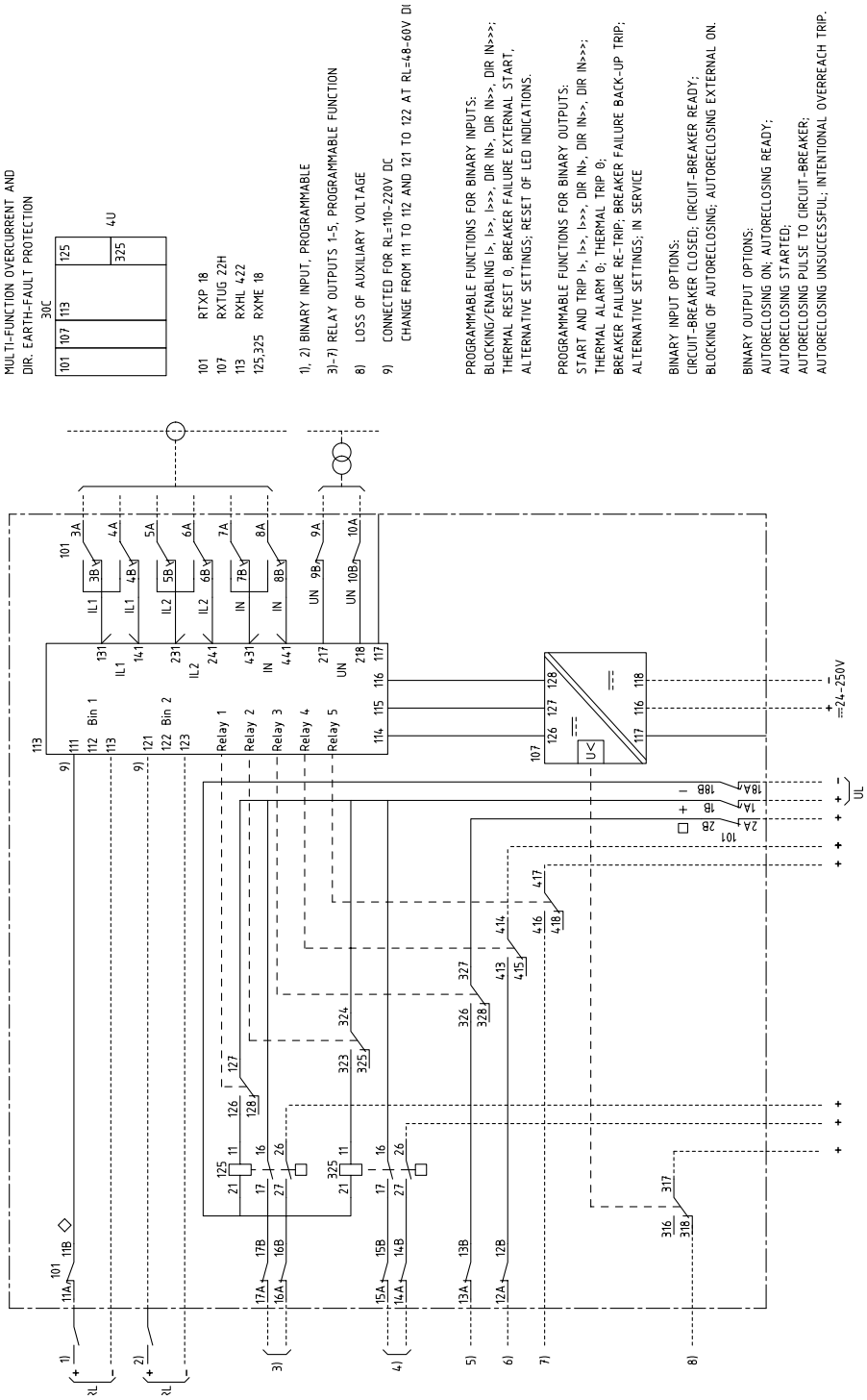

Figure 9: Circuit diagram 1MRK 001 995-CA

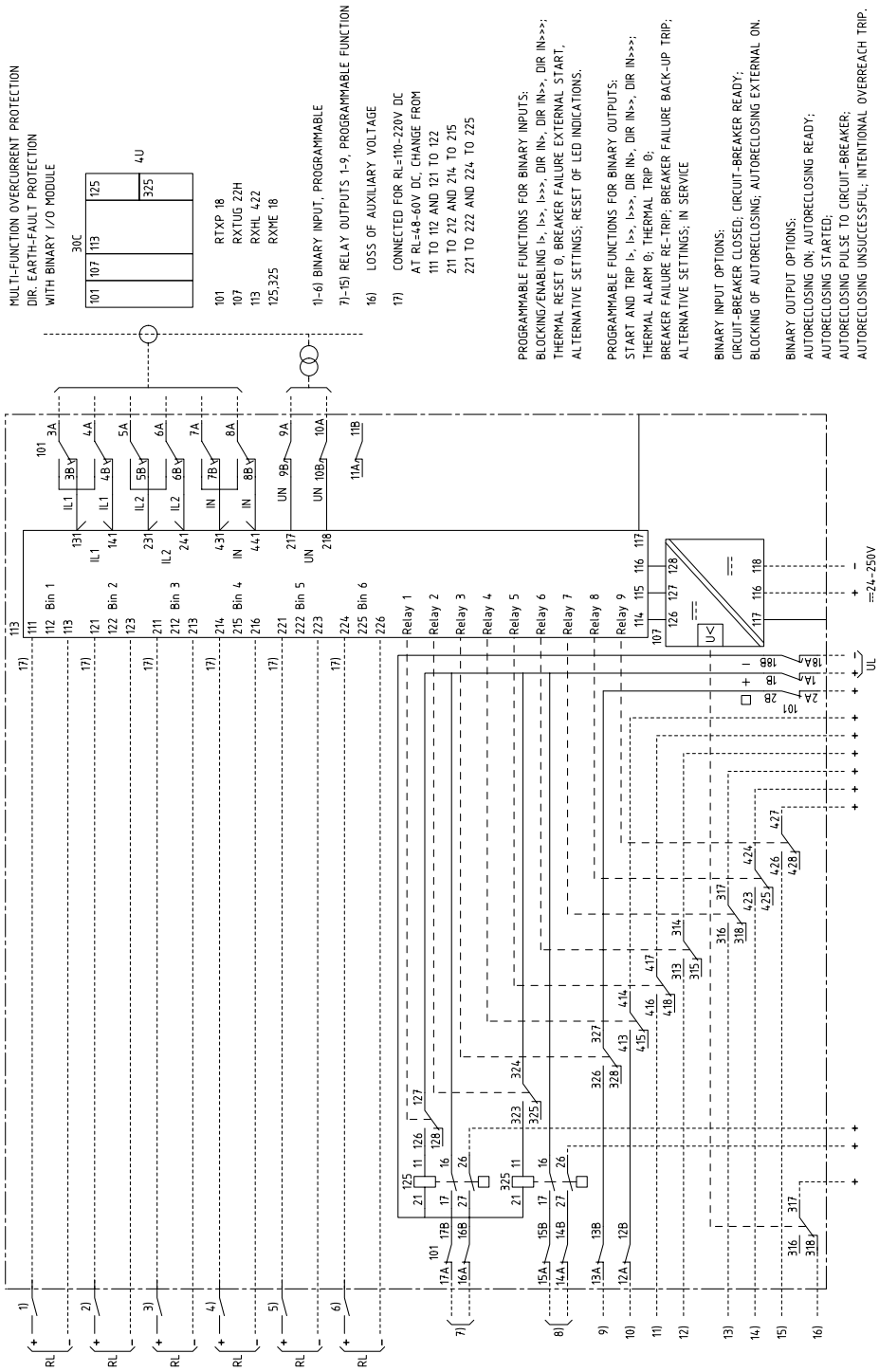

Figure 10: Circuit diagram 1MRK 001 995-CB

Chapter 8 Test records

About this chapter

This chapter contains test records which could be used during commissioning of the protection. There is one test record for each protection function available in the relay.

1 Compact current relay RXHL 422

Table 30: General information

Customer: .....

Station: .....

Tested by: ..... Date: .....

Approved by: ..... Date: .....

Table 31: General station information

Protected object	: .....
Relay position	: .....
CT-ratio, phase	: .....
CT-ratio, neutral	: .....
VT-ratio, neutral	: .....

Table 32: General relay data

Order number		: .....
Rated phase current	I_r	: .....
Rated neutral current	IN_r	: .....
Rated neutral voltage	UN_r	: .....
Included options	Opt	: .....
Version number	VerNo	: .....
Serial number	SerNo	: .....

Table 33: General relay settings

Rated frequency	F_r	: .....
Main CT-ratio, phases	Prim	: .....
	Sec	: .....
Main CT-ratio, neutral	Prim	: .....
	Sec	: .....

Main VT-ratio, neutral	Prim	: .....
	Sec	: .....
Active setting group	Grp	: .....

Table 34: Service value check

	Actual injected value:	**Primary value:**	**Secondary value:**
Phase IL1	:	:	: .....
Phase IL2	:	:	: .....
Neutral I_N	:	:	: .....
Neutral U_N	:	:	: .....

Table 35: Functional check

Testhandle checked in all positions	: .....
Trip circuit checked	: .....
Alarm circuits checked	: .....

2 Overcurrent protection

2.1 Protection settings

		Setting group 1	Setting group 2
Low set stage, I>	Active	:	: .....
	Operate level	:	: .....
	Characteristic	:	: .....
	Constant k value	:	: .....
	Time delay	:	: .....
	Reset time delay	:	: .....
Medium set stage, I>>	Active	:	: .....
	Operate level	:	: .....
	Time delay	:	: .....
High set stage, I>>>	Active	:	: .....
	Operate level	:	: .....
	Time delay	:	: .....

2.2 Protection configurations

	Block/Enable	Binary input
Block/Enable I>	:	: .....
Block/Enable I>>	:	: .....
Block/Enable I>>>	:	: .....
	Binary output	
I>start	:	
I>trip	:	
I>>start	:	

I>>trip	: .....
I>>>start	: .....
I>>>trip	: .....

2.3 Operate and reset values

Table 36: Low set stage, I>

Set value	**Phase IL1**		**Phase IL2**	
	Pick-up	Drop-out	Pick-up	Drop-out
Group 1, I>	:	:	:	: .....
Group 2, I>	:	:	:	: .....

Table 37: Medium set stage, I>>

Set value	**Phase IL1**		**Phase IL2**	
	Pick-up	Drop-out	Pick-up	Drop-out
Group 1, I>>	:	:	:	: .....
Group 2, I>>	:	:	:	: .....

Table 38: High set stage, I>>>

Set value	**Phase IL1**		**Phase IL2**	
	Pick-up	Drop-out	Pick-up	Drop-out
Group 1, I>>>	:	:	:	: .....
Group 2, I>>>	:	:	:	: .....

2.4 Time measurements

Table 39: Inverse time delay, low set stage, I>

Setting	**Injected current**	**Injected current**	**Phase IL1**	**Phase IL2**
Group 1	1.3 x set value	:	:	: .....

Setting	Injected current	Injected current	Phase IL1	Phase IL2
	2.0 x set value	:	:	: .....
Group 2	1.3 x set value	:	:	: .....
	2.0 x set value	:	:	: .....

Table 40: Definite time delay, injected current 1.3 x set operate value

Setting	Function	Phase IL1	Phase IL2
Group 1	Low set stage, I>	:	: .....
	Medium set stage, I>>	:	: .....
	High set stage, I>>>	:	: .....
Group 2	Low set stage, I>	:	: .....
	Meduim set stage, I>>	:	: .....
	High set stage, I>>>	:	: .....

3 Thermal overload protection

3.1 Protection settings

		Setting group 1	Setting group 2
Thermal overload	Active	:	: .....
	Basic current	:	: .....
	Thermal constant	:	: .....
	Alarm level	:	: .....
	Trip level	:	: .....
	Start-up content	:	: .....

3.2 Protection configurations

	Binary input
Reset thermal heat content	: .....
	Binary output
Θ>alarm	: .....
Θ>trip	: .....

3.3 Operate and reset values

Set thermal time constant to $\tau = 0$ min.

Set value	**Phase IL1**		**Phase IL2**	
	Pick-up	Drop-out	Pick-up	Drop-out
Group 1, Θ>Al	:	:	:	: .....
Group 2, Θ>Al	:	:	:	: .....

Set value	**Phase IL1**		**Phase IL2**	
	Pick-up	Drop-out	Pick-up	Drop-out
Group 1, Θ>Tr	:	:	:	: .....
Group 2, Θ>Tr	:	:	:	: .....

3.4 Time measurements

Set thermal time constant back to the calculated value.

Setting	**Function**	**Injected current**	**Operate time**	**Phase IL1**	**Phase IL2**
Group 1	Alarm level	1.26 x set value	t = τ	:	: .....
		3.24 x set value	t = τ / 10	:	: .....
		4.53 x set value	t = τ / 20	:	: .....
	Trip level	1.26 x set value	t = τ	:	: .....
		3.24 x set value	t = τ / 10	:	: .....
		4.53 x set value	t = τ / 20	:	: .....
Group 2	Alarm level	1.26 x set value	t = τ	:	: .....
		3.24 x set value	t = τ / 10	:	: .....
		4.53 x set value	t = τ / 20	:	: .....
	Trip level	1.26 x set value	t = τ	:	: .....
		3.24 x set value	t = τ / 10	:	: .....
		4.53 x set value	t = τ / 20	:	: .....

4 Directional earth-fault protection

4.1 Protection settings

		Setting group 1	Setting group 2
	Characteristic angle α	:	: .....
Low set stage, $I_{->N}$>	Active	:	: .....
	Dir / NonDir	:	: .....
	Operate level	:	: .....
	Characteristic	:	: .....
	Constant k value	:	: .....
	Time delay	:	: .....
	Reset time delay	:	: .....
Medium set stage, $I_{->N}$>>	Active	:	: .....
	Dir / NonDir	:	: .....
	Operate level	:	: .....
	Time delay	:	: .....
High set stage, $I_{->N}$>>>	Active	:	: .....
	Dir / NonDir	:	: .....
	Operate level	:	: .....
	Time delay	:	: .....

4.2 Protection configurations

	Block/Enable	Binary input
Block/Enable $I_{->N}$>	:	: .....
Block/Enable $I_{->N}$>>	:	: .....
Block/Enable $I_{->N}$>>>	:	: .....
	Binary output	
$I_{->N}$>start	:	

$I_{->N}$>trip	: .....
$I_{->N}$>>start	: .....
$I_{->N}$>>trip	: .....
$I_{->N}$>>>start	: .....
$I_{->N}$>>>trip	: .....

4.3 Operate and reset values

Setting	**Set value**	**Neutral I_N**	
		Pick-up	Drop-out
Group 1	Low set stage, $I_{->N}$>	:	: .....
	Medium set stage, $I_{->N}$>>	:	: .....
	High set stage, $I_{->N}$>>>	:	: .....
Group 1	Low set stage, $I_{->N}$>	:	: .....
	Medium set stage, $I_{->N}$>>	:	: .....
	High set stage, $I_{->N}$>>>	:	: .....

4.4 Time measurements

Table 41: Inverse time delay, low set stage, $I_{->N}$>

Setting	**Function**	**Injected current**	**Neutral I_N**
Group 1	1.3 x set operate value	:	: .....
	2.0 x set operate value	:	: .....
Group 2	1.3 x set operate value	:	: .....
	2.0 x set operate value	:	: .....

Table 42: Definite time delay, injected current 1.3 x set operate value

Setting	**Function**	**Injected current**	**Neutral I_N**
Group 1	Low set stage, $I_{->N}$>	:	: .....
	Medium set stage, $I_{->N}$>>	:	: .....
	High set stage, $I_{->N}$>>	:	: .....

Setting	**Function**	**Injected current**	**Neutral I_N**
Group 2	Low set stage, $I_{->N}$>	:	: .....
	Medium set stage, $I_{->N}$>>	:	: .....
	High set stage, $I_{->N}$>>>	:	: .....

5 Breaker failure protection

5.1 Protection settings

The activation levels are in percentage of the low set stages and follows the active setting group.

		Setting group 1	Setting group 2
Breaker failure	Active	:	
	Phase current activation level	:	: .....
	Neutral current activation level	:	: .....
	Time delay	:	
Breaker failure activates by	Trip, low set stage I>	:	
	Trip, medium set stage I>>	:	
	Trip, high set stage I>>>	:	
	Trip thermal stage Θ>	:	
	Trip, low set stage $I_{->N}$>	:	
	Trip, medium set stage $I_{->N}$>>	:	
	Trip, high set stage $I_{->N}$>>>	:	
	External activation BFExtSt	:	

5.2 Protection configurations

	Binary inputs
BF external start	: .....
	Binary output
BF re-trip	: .....
BF back-up trip	: .....

5.3 Activation and reset values

Energise binary input external start of breaker failure continously.

Re-trip signal gets high when binary input activates : .....

Set value	**Setting**	**Phase IL1**		**Phase IL2**	
		Pick-up	Drop-out	Pick up	Drop-out
BF>	Group 1	:	:	:	: .....
	Group 2	:	:	:	: .....

Set value	**Setting**	**Neutral I_N**	
		Pick-up	Drop-out
BF_N>	Group 1	:	: .....
	Group 2	:	: .....

5.4 External activation of the breaker failure protection

5.4.1 Time measurements

Switch-on the binary input and measure the definite time delay (80 %, no operation).

Function	**Injected current**	**Phase IL1**	**Phase IL2**
Phase stage BF>	80 % of set value	:	: .....
	120 % of set value	:	: .....

Function	**Injected current**	**Neutral I_N**
Neutral stage BF_N>	80 % of set value	: .....
	120 % of set value	: .....

5.5 Internal activation of the breaker failure protection

5.5.1 Time measurements

Energize the relay with a current equal to 110 % of the stage which will cause the activation of the breaker failure and measure the definite time delay.

Function	Activation stage	Phase IL1	Phase IL2
Phase stage BF>	Trip signal I>	:	: .....
	Trip signal I>>	:	: .....
	Trip signal I>>>	:	: .....
	Trip signal Θ>	:	: .....

Function	Activation stage	Neutral U_N and I_N
Neutral stage BF_N>	Trip signal $I_{->N}$>	: .....
	Trip signal $I_{->N}$>>	: .....
	Trip signal $I_{->N}$>>>	: .....

6 Intentional overreach trip function

6.1 Protection settings

		Setting
Intentional overreach	Active	: .....
	Time delay	: .....
Intentional overreach activates by	Start, low set stage I>	: .....
	Start, medium set stage I>>	: .....
	Start, high set stage I>>>	: .....

6.2 Protection configurations

	Binary output
Intentional overreach trip	: .....

6.3 Internal activation of the intentional overreach trip function

6.3.1 Time measurements

Enerigse the relay with a current equal to 110 % of the stage which will cause the activation of the intentional overreach function and measure the definite time delay.

Setting	Activation stage	Phase IL1
Group 1	Start signal I>	: .....
	Start signal I>>	: .....
	Start signal I>>>	: .....
Group 2	Start signal I>	: .....
	Start signal I>>	: .....
	Start signal I>>>	: .....

7 Automatic reclosing function

7.1 Settings

		Setting
Automatic reclosing	Active	: .....
	Reclaim time	: .....
	Shot 1 dead-time	: .....
	Shot 2 dead-time	: .....
	Shot 3 dead-time	: .....
	Shot 4 dead-time	: .....
Automatic reclosing activates by	Trip, low set stage I>	: .....
	Trip, medium set stage I>>	: .....
	Trip, high set stage I>>>	: .....
	Trip, low set stage $I_{->N}$>	: .....
	Trip, medium set stage $I_{->N}$>>	: .....
	Trip, high set stage $I_{->N}$>>>	: .....
	Intentional overreach trip	: .....

7.2 Configurations

	Binary input
External automatic reclosing on	: .....
Circuit-breaker closed	: .....
Circuit-breaker ready	: .....
Automatic reclosing block	: .....

	Binary output
Automatic reclosing on	: .....
Automatic reclosing ready	: .....
Automatic reclosing started	: .....
Reclosing pulse	: .....
Unsuccessful reclosing	: .....

7.3 Internal activiation of the automatic reclosing function

7.3.1 Time measurement

Energise the relay with a current equal to 110 % of the stage which will cause the activation of the automatic reclosing function and measure the dead time (open time).

Phase IL1

Activation stage	**Shot 1**	**Shot 2**	**Shot 3**	**Shot 4**
Trip signal I>	:	:	:	: .....
Trip signal I>>	:	:	:	: .....
Trip signal I>>>	:	:	:	: .....
Trip signal IntOvTr	:	:	:	: .....

Neutral U_N and I_N

Activation stage	**Shot 1**	**Shot 2**	**Shot 3**	**Shot 4**
Trip signal $I_{->N}$>	:	:	:	: .....
Trip signal $I_{->N}$>>	:	:	:	: .....
Trip signal $I_{->N}$>>>	:	:	:	: .....