Disconnector Control
Using GSM Communication
at Blåsjön, Sweden

Reference Leaflet Project Blåsjön

New

ABB Automation

A Man With Views

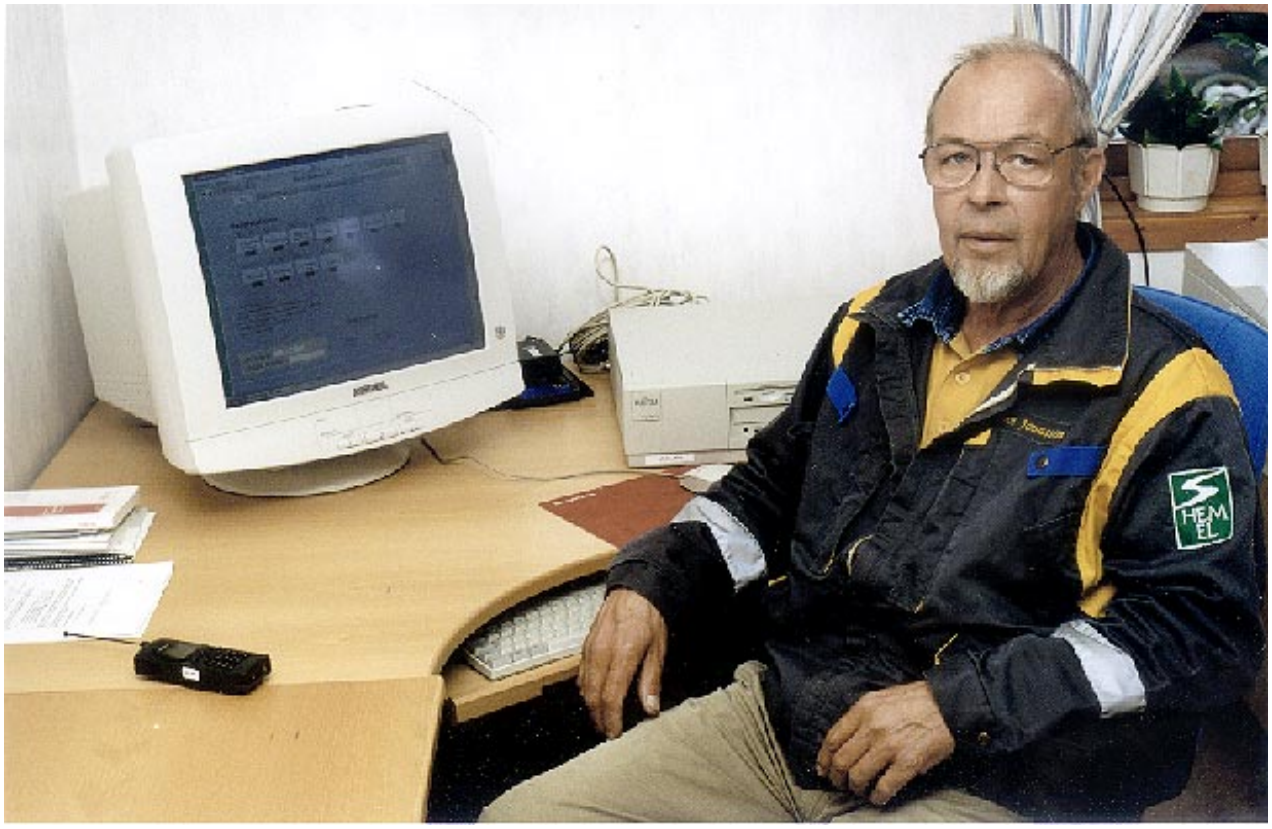

Allan Jonasson, Gullspångs Nät at Gäddede, wanted a system to control existing pole-mounted switch-disconnectors and switches. The equipment came from different manufacturers. He also wanted to be able to measure current and voltage on the lines.

The terrain of Gäddede, near the Norwegian border, is very hilly and communication is a big problem. The solution he chose was a S.P.I.D.E.R. MicroSCADA network control system with DTU remote control and monitoring units. Communication is based on GSM phones with two hour battery-backup.

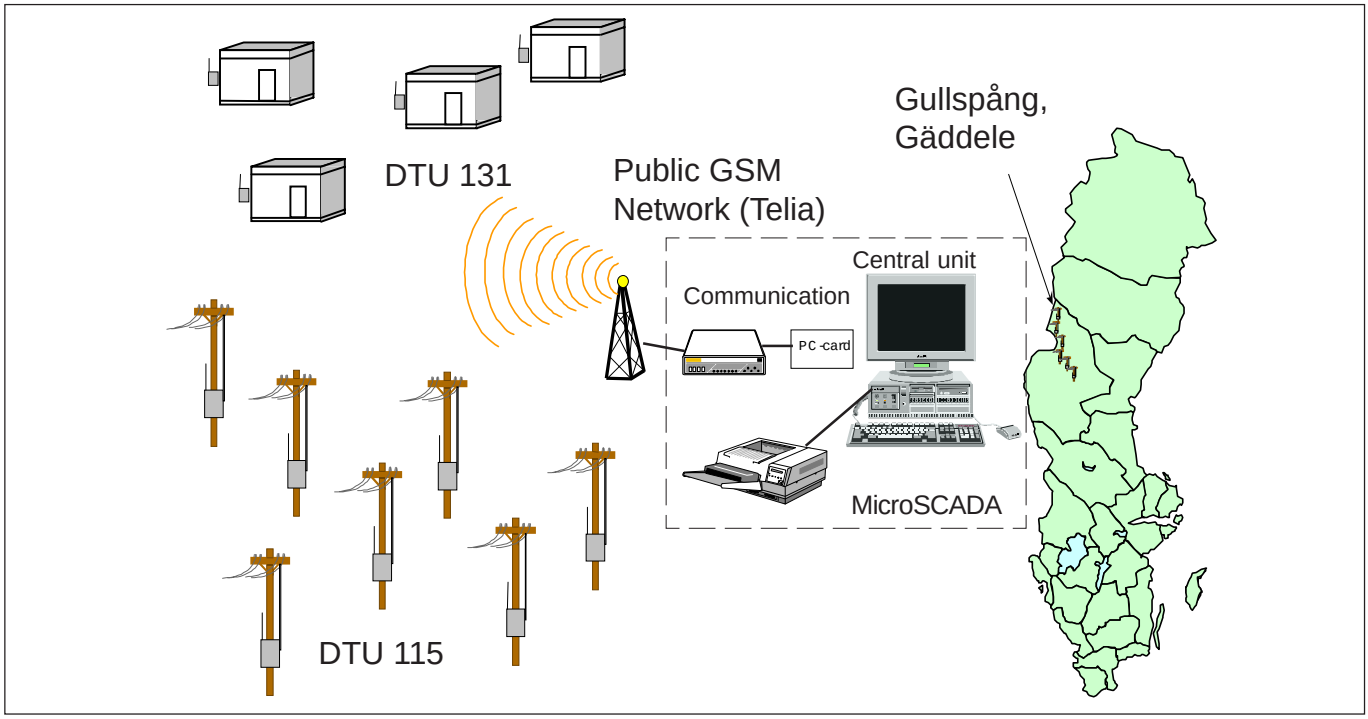

SYSTEM UNITS

Software

The software package may be installed in the customer's office computer, in a separate system computer or even in an existing network control system.

The network control system provides continuous process information, such as alarms, current and voltage measurements, etc. A network distribution map improves your network overview, which usually results in reduced outage times.

Remote control and monitoring unit DTU 115

Control of one or two switch-disconnectors. The control and monitoring unit can be obtained with or without an integrated motor operating device, depending on the type of switch-disconnector used.

The unit can include a battery charger, battery backup and a heating unit which can be remotely controlled.

Remote control, monitoring and fault indication unit DTU 131

The control, monitoring and fault indication unit DTU 131 is capable of controlling four switch-disconnectors, small transformer stations, network stations, etc. In addition, transformers and/or sensors can be used for measuring currents and voltages.

Communication

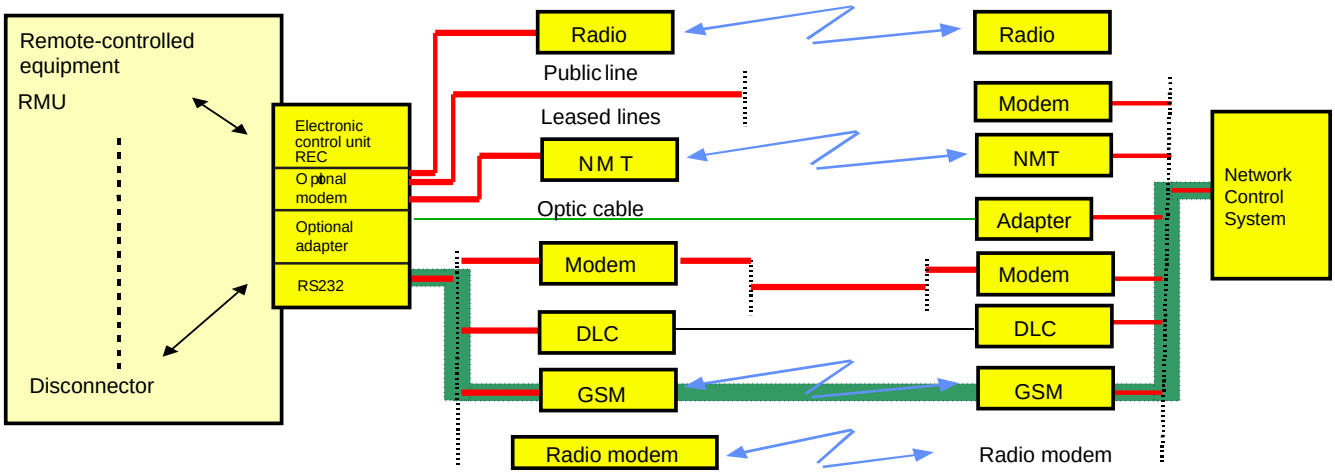

= Gäddede, new type of communication

GSM communication

GSM is an excellent solution for wide electric networks in hilly and rough terrain. The GSM technology has the following advantages:

- Low acquisition costs
- No antenna masts, only a car antenna needed
- No service costs for the communication network
- Battery-backup for the GSM network can be obtained

Switch-disconnector UFG

ABB switch-disconnector UFG2441 mounted on an EBR crossbar. This or other existing pole-mounted switch-disconnectors may be euipped with DTU115 /DTU131 remote control units with 24 Vdc motor operating devices.

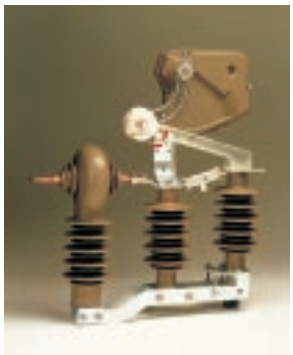

Switch-disconnector NPS/UFG

Switch-disconnectors type UFG and NPS24 can be supplied with:

- a unique breaking chamber, type K5, for max 630 A. 8 kA making capacity against line short-circuit.
  This switch-disconnector can be closed against a line short-circuit by the operator. The making capacity of the switch-disconnector is defined and tested for continued closures against line short-circuits.
- special current sensors 400/0.1 A and overvoltage protection transmitting information of fault currents and network load.

SECTOS NXB

SECTOS NXB is an SF_6 switch-disconnector with integrated motor device. It can also be equipped with an earthing switch. The switch-disconnector is tested according to IEC 60264-1 and IEC129, and is suitable for use in places with high demands on performance and reliability (ice, sand, salt). SECTOS NXB is equipped with epoxy resin or silicon rubber insulators .

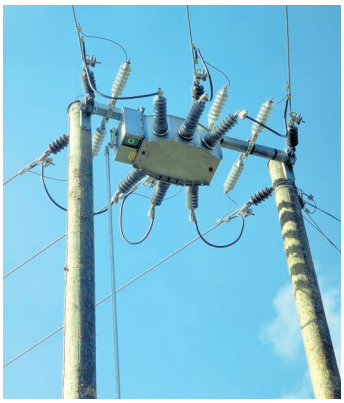

1MRS 751843-MTR EN 06.2000

ABB Substation Automation Oy
P.O. Box 699, FIN-65101 VAASA, Finland
Tel. +358-10 224 000, Fax. +358-10 224 1094, http://www.abb.fi