Line differential protection terminal

REL 551-C1*2.3

1MRK 506 147-BEN
Page 1
Revision: -
Issued: March 2003
Data subject to change without notice

Features

- Line differential
  - Line differential protection (DIFL)
- Current
  - Instantaneous overcurrent protection (IOC)
  - Time delayed overcurrent protection (TOC)
  - Thermal overload protection (THOL)
  - Definite and inverse time-delayed residual overcurrent protection (TEF)
- Secondary system supervision
  - Current circuit supervision (CTSU)
- Logic
  - Trip logic (TR)
- Serial communication
  - Simultaneous dual protocol serial communication facilities
- Monitoring
  - LED indication function (HL, HLED)
  - Local Human Machine Interface (HMI)
  - Disturbance report (DRP)
  - Indications
  - Disturbance recorder
  - Event recorder
  - Trip value recorder
  - Monitoring of AC analogue measurements
  - Monitoring of DC analogue measurements
- Versatile local human-machine interface (HMI)
- Extensive self-supervision with internal event recorder
- Time synchronization with 1 ms resolution
- Four independent groups of complete setting parameters
- Powerful software PC ‘tool-box’ for monitoring, evalution and user configuration

Platform

Application

The platform hardware and common software functions are included for all REx 5xx terminals. It is the foundation on which all terminals are built. Application specific modules and functions are added to create a specific terminal type or family.

Design

The REx 5xx platform consists of a case, hardware modules and a set of basic functions.

The closed and partly welded steel case makes it possible to fulfill stringent EMC requirements. For case size 1/1x19” IP 30 applies for the top and bottom part. IP 54 can be obtained for the front area in flush applications. Mounting kits are available for rack, flush or wall mounting.

All connections are made on the rear of the case. Screw compression type terminal blocks are used for electrical connections. Serial communication connections are made by optical fibre connectors type Hewlett Packard (HFBR) for plastic fibres or bayonet type ST for glass fibres.

A set of hardware modules are always included in a terminal. Application specific modules are added to create a specific terminal type or family.

The basic functions provide a terminal with basic functionality such as self supervision, I/O-system configurator, real time clock and other functions to support the protection and control system of a terminal.

Common functions

Description

Common functions are the software functions that always are included in the terminals.

Time synchronisation (TIME)

Application

Use the time synchronization source selector to select a common source of absolute time for the terminal when it is a part of a protection system. This makes comparison of events and disturbance data between all terminals in a system possible.

Functionality

Two main alternatives of external time synchronization are available. Either the synchronization message is applied via any of the communication ports of the terminal as a telegram message including date and time, or as a minute pulse, connected to a binary input. The minute pulse is used to fine tune already existing time in the terminals.

The REx 5xx terminal has its own internal clock with date, hour, minute, second and millisecond. It has a resolution of 1 ms.

The clock has a built-in calendar that handles leap years through 2098. Any change between summer and winter time must be handled manually or through external time synchronization. The clock is powered by a capacitor, to bridge interruptions in power supply without malfunction.

The internal clock is used for time-tagging disturbances, events in Substation monitoring system (SMS) and Substation control system (SCS), and internal events.

Setting group selection (GRP)

Application

Use the four sets of settings to optimize the terminals operation for different system conditions. By creating and switching between fine tuned setting sets, either from the human-machine interface or configurable binary inputs, results in a highly adaptable terminal that can cope with a variety of system scenarios.

Functionality

The GRP function block has four functional inputs, each corresponding to one of the setting groups stored within the terminal. Activation of any of these inputs changes the active setting group. Four functional output signals are available for configuration purposes, so that continuous information on active setting group is available.

Setting lockout (HMI)

Application

Unpermitted or uncoordinated changes by unauthorized personnel may cause severe damage to primary and secondary power circuits. Use the setting lockout function to prevent unauthorized setting changes and to control when setting changes are allowed.

By adding a key switch connected to a binary input a simple setting change control circuit can be built simply allowing only authorized keyholders to make setting changes from the built-in HMI.

Functionality

Activating the setting restriction prevents unauthorized personell to purposely or by mistake change terminal settings.

The HMI--BLOCKSET functional input is configurable only to one of the available binary inputs of a REx 5xx terminal. For this reason, the terminal is delivered with the default configuration, where the HMI--BLOCKSET signal is connected to NONE-NOSIGNAL.

The function permits remote changes of settings and reconfiguration through the serial communication ports. The setting restrictions from remote can be activated only from the local HMI.

All other functions of the local human-machine communication remain intact. This means that an operator can read all disturbance reports and other information and setting values for different protection parameters and the configuration of different logic circuits.

I/O system configurator with internal event recorder (IOP)

Application

The I/O system configurator must be used in order for the terminal’s software to recognize added modules and to create internal address mappings between modules and protections and other functions.

Self supervision (INT)

Application
Use the local HMI, SMS or SCS to view the status of the self-supervision function. The self-supervision operates continuously and includes:

- Normal micro-processor watchdog function
- Checking of digitized measuring signals
- Checksum verification of PROM contents and all types of signal communication

Logic function blocks

Application
The user can with the available logic function blocks build logic functions and configure the terminal to meet application specific requirements.

Different protection, control, and monitoring functions within the REx 5xx terminals are quite independent as far as their configuration in the terminal is concerned. The user can not change the basic algorithms for different functions. But these functions combined with the logic function blocks can be used to create application specific functionality.

Invert function block (INV)
The inverter function block INV has one input and one output, where the output is in inverse ratio to the input.

OR function block (OR)
The OR function is used to form general combinatory expressions with boolean variables. The OR function block has six inputs and two outputs. One of the outputs is inverted.

AND function block (AND)
The AND function is used to form general combinatory expressions with boolean variables.The AND function block has four inputs and two outputs. One of the inputs and one of the outputs are inverted.

Timer function block (TM)
The function block TM timer has drop-out and pick-up delayed outputs related to the input signal. The timer has a settable time delay (parameter T).

Timer long fuction block (TL)
The function block TL timer with extended maximum time delay at pick-up and at drop-out, is identical with the TM timer. The difference is the longer time delay.

Pulse timer function block (TP)
The pulse function can be used, for example, for pulse extensions or limiting of operation of outputs. The pulse timer TP has a settable length.

Extended length pulse function block (TQ)
The function block TQ pulse timer with extended maximum pulse length, is identical with the TP pulse timer. The difference is the longer pulse length.

Exclusive OR function block (XOR)
The exclusive OR function XOR is used to generate combinatory expressions with boolean variables. The function block XOR has two inputs and two outputs. One of the outputs is inverted. The output signal is 1 if the input signals are different and 0 if they are equal.

Set-reset with memory function block (SR)
The Set-Reset (SR) function is a flip-flop that can set or reset an output from two inputs respectively. Each SR function block has two outputs, where one is inverted.

Set-reset with memory function block (SM)
The Set-Reset function SM is a flip-flop with memory that can set or reset an output from two inputs respectively. Each SM function block has two outputs, where one is inverted. The memory setting controls if the flip-flop after a power interruption will return the state it had before or if it will be reset.

Controllable gate function block (GT)
The GT function block is used for controlling if a signal should be able to pass from the input to the output or not depending on a setting.

Settable timer function block (TS)
The function block TS timer has outputs for delayed input signal at drop-out and at pick-up. The timer has a settable time delay. It also has an Operation setting On, Off that controls the operation of the timer.

Blocking of signals during test

Application
The protection and control terminals have a complex configuration with many included functions. To make the testing procedure easier, the terminals include the feature to indi-

vidually block a single, several or all functions.

This means that it is possible to see when a function is activated or trips. It also enables the user to follow the operation of several related functions to check correct functionality and to check parts of the configuration etc.

Line differential

Line differential protection

Application

Current line-differential protection compares the currents entering and leaving the protected overhead line or cable. The differential function offers phase-segregated true current differential protection for all networks. Current comparison on a per phase basis obviates the problem of the current summation approach and provides phase selection information for single-pole tripping.

A dependable communication link is needed to allow exchange of information between the terminals at the line ends. Direct optical fiber or galvanic commnication link are supported, as well as digital communication systems like multiplexed and route switched networks.The transmission time is measured in short intervals to provide correct synchronization of local clocks. The transmission time compensation is based on the assumption that the transmission time is the same in both directions.

Two independent binary signals can be transmitted from one line side to the other through the differential communication link for information purposes.

Functionality

The current differential function is of master/master design. Each terminal evaluates the three phase currents related to its line end, in terms of amplitude and phase angle, and sends them to the other terminal through the communication channel. At the same time it receives the three current information from the other terminal and performs locally the phase segregated current comparison.

All currents are Fourier filtered in order to extract the sine and cosine components. The six components, two per phase, are included in a message that is transmitted every 5 ms to the remote terminal over a synchronous 56/64 kbit/s data channel. Also included in the message is information for differential function supervision, CT saturation detection, synchronisation of terminals, transfer trip signals etc.

The differential measurement is stabilised phase by phase with the current scalar sum, see figure 1. The degree of stabilisation is settable.

All currents are individually supervised by the patented CT saturation detection algorithm, to minimise the requirements on the CTs. In case of CT saturation, the degree of stabilisation is increased in the affected phase in the differential protections at both ends, see figure 1.

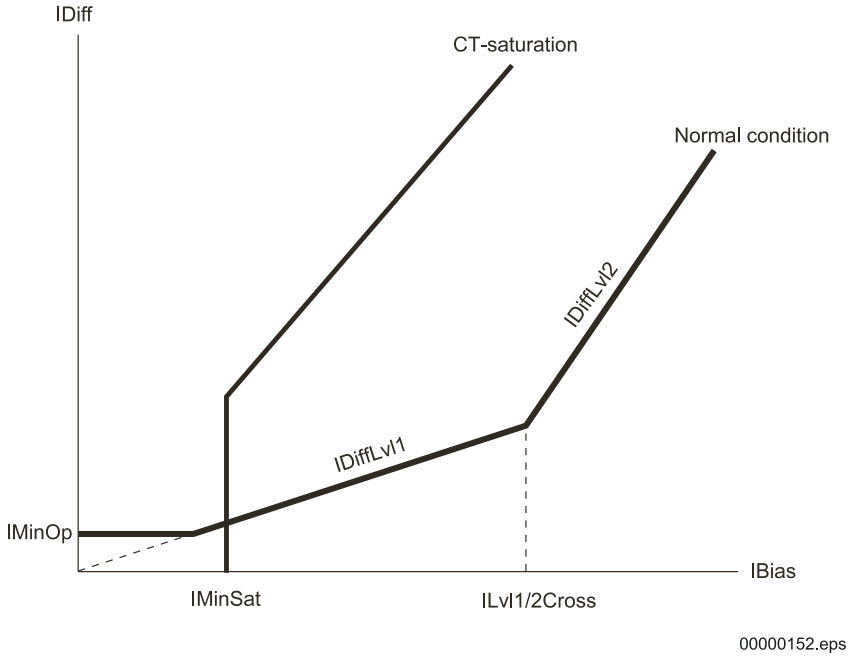

Figure 1: Operating characteristic

$$I_{Diff} = \left| \overline{I_{Local}} + \overline{I_{Remote}} \right|$$

$$I_{Bias} = \frac{\left| \overline{I_{Local}} \right| + \left| \overline{I_{Remote}} \right|}{2}$$

$$(I_{Bias})_{Evaluate} = \text{Max}\{[(I_{Bias})_{Own\ phase}] \text{ OR } [0.5 \cdot (I_{Bias})_{Other\ phases}]\}$$

The communication delay is continuously measured and automatically compensated for, in the differential measurement. This function enables the terminal to use a communication network with automatic route switching (route switching is frequently used in public digital networks).

The communication telegram is checked for errors, and on detection of erroneous information the telegram is excluded from the evaluation. In order to trip, two or three out of four accepted telegrams are required. This provides the needed security against wrong operation due to transmission disturbances.

Current

Instantaneous overcurrent protection (IOC)

Application

Different system conditions, such as source impedance and the position of the faults on long transmission lines influence the fault currents to a great extent. An instantaneous phase overcurrent protection with short operate time and low transient overreach of the measuring elements can be used to clear close-in faults on long power lines, where short fault clearing time is extremely important to maintain system stability.

The instantaneous residual overcurrent protection can be used in a number of applica-

tions. Below some examples of applications are given.

- Fast back-up earth fault protection for faults close to the line end.
- Enables fast fault clearance for close in earth faults even if the distance protection or the directional residual current protection is blocked from the fuse supervision function

Functionality

The current measuring element continuously measures the current in all three phases and compares it to the set operate value IP>>. A filter ensures immunity to disturbances and dc components and minimizes the transient overreach. If any phase current is above the set value IP>>, the phase overcurrent trip signal TRP is activated. Separate trip signal for the actual phase(s) is also activated. The input signal BLOCK blocks all functions in the current function block.

The current measuring element continuously measures the residual current and compares it to the set operate value IN>>. A filter ensures immunity to disturbances and dc components and minimizes the transient overreach. If the residual current is above the set value IN>>, the residual overcurrent trip signal TRN is activated. The general trip signal TRIP is activated as well. The input signal BLOCK blocks the complete function.

Time delayed overcurrent protection (TOC)

Application

The time delayed overcurrent protection, TOC, operates at different system conditions for currents exceeding the preset value and which remains high for longer than the delay time set on the corresponding timer. The function can also be used for supervision and fault detector for some other protection functions, to increase the security of a complete protection system. It can serve as a reserve function for the line distance protection, if activated under fuse failure conditions which has disabled the operation of the line distance protection.

The time delayed residual overcurrent protection is intended to be used in solidly and low resistance earthed systems. The time delayed residual overcurrent protection is suitable as back-up protection for phase to earth faults, normally tripped by operation of the distance protection. The protection function can also serve as protection for high resistive phase to earth faults.

Functionality

The current measuring element continuously measures the current in all three phases and compares it to the set operate value IP>. A filter ensures immunity to disturbances and dc components and minimizes the transient overreach. If the current in any of the three phases is above the set value IP>, a common start signal STP and a start signal for the actual phase(s) are activated. The timer tP is activated and the phase overcurrent trip signal TRP is activated after set time. The general trip signal TRIP is activated as well.

The input signal BLOCK blocks the function. The input signal BLKTR blocks both trip signals TRP and TRIP.

The residual current measuring element continuously measures the residual current and compares it with the set operate value IN>. A filter ensures immunity to disturbances and dc components and minimizes the transient overreach. If the measured current is above the set value IN>, a start signal STN is activated. The timer tN is activated and the residual overcurrent trip signal TRN is activated after set time. The general trip signal TRIP is activated as well. The input signal BLOCK blocks the function. The input signal BLKTR blocks both trip signals TRN and TRIP.

Thermal overload protection (THOL)

Appliction

Load currents that exceed the permissible continuous value may cause damage to the conductors and isolation due to overheating. The permissible load current will vary with the ambient temperature.

The THOL thermal overcurrent function supervises the phase currents and provides a reliable protection against damage caused by excessive currents. The temperature compensation gives a reliable thermal protection even when the ambient temperature has large variations.

Functionality

The final temperature rise of an object relative the ambient temperature is proportional to the square of the current. The rate of tem-

perature rise is determined by the magnitude of the current and the thermal time constant of the object. The same time constant determines the rate of temperature decrease when the current is decreased.

The thermal overload function uses the highest phase current. The temperature change is continuously calculated and added to the figure for the temperature stored in the thermal memory. When temperature compensation is used, the ambient temperature is added to the calculated temperature rise. If no compensation is used, 20° C is added as a fixed value. The calculated temperature of the object is then compared to the set values for alarm and trip.

The information on the ambient temperature is received via a transducer input with for example 0 - 10 mA or 4 - 20 mA.

The output signal THOL--TRIP has a duration of 50 ms. The output signal THOL--START remains activated as long as the calculated temperature is higher than the set trip value minus a settable temperature difference TdReset (hysteresis). The output signal THOL--ALARM has a fixed hysteresis of 5° C.

Definite and inverse time-delayed residual overcurrent protection (TEF)

Application

Use the dependent and independent time delayed residual overcurrent functions in solidly earthed systems to get a sensitive and fast fault clearance of phase to earth faults.

The nondirectional protection can be used when high sensitivity for earth fault protection is required. It offers also a very fast back-up earth fault protection for the part of a transmission line, closest to the substation with the protection.

The nondirectional residual overcurrent protection can be given a relatively low current pick-up setting. Thus the protection will be sensitive, in order to detect high resistive phase to earth faults.

Functionality

The residual overcurrent protection (TEF) measures the residual current of the protected line. This current is compared to the current settings of the function. If the residual current is larger than the setting value a trip signal will be sent to the output after a set delay time. The time delay can be selected between the independent or dependent possibility.

In order to avoid unwanted trip for transformer inrush currents, the function is blocked if the second harmonic content of the residual current is larger than 20% of the measured residual current.

Secondary system supervision

Current circuit supervision (CTSU)

Application

Faulty information about current flows in a protected element might influence the security (line differential protection) or dependability (line distance protection) of a complete protection system.

The main purpose of the current circuit supervision function is to detect different faults in the current secondary circuits and influence the operation of corresponding main protection functions.

The signal can be configured to block different protection functions or initiate an alarm.

Functionality

The function compares the sum of the three phase currents from one current transformer core with a reference zero sequence current from another current transformer core.

The function issues an output signal when the difference is greater than the set value.

Control

Automatic reclosing function (AR)

Application

Especially at higher voltages, the majority of line faults are single-phase-to-earth. Faults involving all three phases are rare. The main purpose of the single- and two-pole automatic reclosing function, operating in conjunction with a single- and two-pole tripping capability, is to limit the effect to the system of faults involving less than all three phases. This is particularly valuable for maintaining system stability in systems with limited meshing or parallel routing.

Functionality

Of the six reclosing programs, one provides for three-pole reclosing only, while the others provide for single- and two-pole reclosing as well. For the latter, only the first shot may be single- or two-pole. All subsequent shots up to the maximum number will be three-pole. For some of the programs, depending on the initial trip, no shot, or only one shot, will be permitted irrespective of the number of shots selected.

Logic

Trip logic (TR)

Application

The main purpose of the TR trip logic function is to serve as a single node through which all tripping for the entire terminal is routed.

To meet the different single, double, 1 and 1/2 or other multiple circuit breaker arrangements, one or more identical TR function blocks may be provided within a single terminal. The actual number of these TR function blocks that may be included within any given terminal depends on the type of terminal. Therefore, the specific circuit breaker arrangements that can be catered for, or the number of bays of a specific arrangement that can be catered for, depends on the type of terminal.

Functionality

The minimum duration of a trip output signal from the TR function is settable.

The TR function has a single input through which all trip output signals from the protection functions within the terminal, or from external protection functions via one or more of the terminal’s binary inputs, are routed. It has a single trip output for connection to one or more of the terminal’s binary outputs, as well as to other functions within the terminal requiring this signal.

Serial communication

Application

One or two optional optical serial interfaces, one with LON protocol and the other with SPA or IEC 60870-5-103 protocol, for remote communication, enables the terminal to be part of a Substation Control System (SCS) and/or Substation Monitoring System (SMS). These interfaces are located at the rear of the terminal. The two interfaces can be configured independent of each other, each with different functionalities regarding monitoring and setting of the functions in the terminal.

Serial communication, SPA (SPA-bus V 2.4 protocol)

Application

This communication bus is mainly used for SMS. It can include different numerical relays/terminals with remote communication possibilities. Connection to a personal computer (PC) can be made directly (if the PC is located in the substation) or by telephone modem through a telephone network with CCITT characteristics.

Functionality

When communicating with a PC, using the rear SPA port, the only hardware needed for a station monitoring system is optical fibres and opto/electrical converter for the PC. Remote communication over the telephone network also requires a telephone modem. The software needed in the PC when using SPA, either locally or remotely, is SMS 510 or/and CAP 540.

SPA communication is applied when using the front communication port, but for this purpose, no special serial communication function is required in the terminal. Only the software in the PC and a special cable for front connection is needed.

Serial communication, IEC (IEC 60870-5-103 protocol)

Application
This communication protocol is mainly used when a protection terminal communicates with a third party control system. This system must have a program that can interpret the IEC 60870-5-103 communication messages.

Functionality
As an alternative to the SPA communication the same port can be used for the IEC communication. The IEC 60870-5-103 protocol implementation in REx 5xx consists of these functions:

- Event handling
- Report of analog service values (measurements)
- Fault location
- Command handling
  - Autorecloser ON/OFF
  - Teleprotection ON/OFF
  - Protection ON/OFF
  - LED reset
  - Characteristics 1 - 4 (Setting groups)
- File transfer (disturbance files)
- Time synchronization

The events created in the terminal available for the IEC protocol are based on the event function blocks EV01 - EV06 and disturbance function blocks DRP1 - DRP3. The commands are represented in a dedicated function block ICOM. This block has output signals according to the IEC protocol for all commands.

Serial communication, LON

Application
An optical network can be used within the Substation Automation system. This enables communication with the terminal through the LON bus from the operator’s workplace, from the control center and also from other terminals.

Functionality
An optical serial interface with LON protocol enables the terminal to be part of a Substation Control System (SCS) and/or Substation Monitoring System (SMS). This interface is located at the rear of the terminal. The hardware needed for applying LON communication depends on the application, but one very central unit needed is the LON Star Coupler and optic fibres connecting the star coupler to the terminals. To communicate with the terminals from a Personal Computer (PC), the SMS 510, software or/and the application library LIB 520 together with MicroSCADA is needed.

Event function (EV)

Application
When using a Substation Automation system, events can be spontaneously sent or polled from the terminal to the station level. These events are created from any available signal in the terminal that is connected to the event function block. The event function block can also handle double indication, that is normally used to indicate positions of high-voltage apparatuses. With this event function block, data also can be sent to other terminals over the interbay bus.

Functionality
As basic, 12 event function blocks EV01-EV12 running with a fast cyclicity, are available in REx 5xx. When the function Apparatus control is used in the terminal, additional 32 event function blocks EV13-EV44, running with a slower cyclicity, are available.

Each event function block has 16 connectables corresponding to 16 inputs INPUT1 to INPUT16. Every input can be given a name with up to 19 characters from the CAP 540 configuration tool.

The inputs can be used as individual events or can be defined as double indication events.

The inputs can be set individually, from the Parameter Setting Tool (PST) under the Mask-Event function, to create an event at pick-up, drop-out or at both pick-up and drop-out of the signal.

The event function blocks EV01-EV06 have inputs for information numbers and function type, which are used to define the events according to the communication standard IEC 60870-5-103.

Monitoring

Disturbance report (DRP)

Application
Use the disturbance report to provide the network operator with proper information about disturbances in the primary network. The function comprises several subfunctions enabling different types of users to access relevant information in a structured way.

Select appropriate binary signals to trigger the red HMI LED to indicate trips or other important alerts.

Functionality
The disturbance report collects data from each subsystem for up to ten disturbances. The data is stored in nonvolatile memory, used as a cyclic buffer, always storing the latest occurring disturbances. Data is collected during an adjustable time frame, the collection window. This window allows for data collection before, during and after the fault.

The collection is started by a trigger. Any binary input signal or function block output signal can be used as a trigger. The analog signals can also be set to trigger the data collection. Both over levels and under levels are available. The trigger is common for all subsystems, hence it activates them all simultaneously.

A triggered report cycle is indicated by the yellow HMI LED, which will be lit. Binary signals may also be used to activate the red HMI LED for additional alerting of fault conditions. A disturbance report summary can be viewed on the local HMI.

Indications

Application
Use the indications list to view the state of binary signals during the fault. All binary input signals to the disturbance report function are listed.

Functionality
The indications list tracks zero-to-one changes of binary signals during the fault period of the collection window. This means that constant logic zero, constant logic one or state changes from logic one to logic zero will not be visible in the indications list. Signals are not time tagged. In order to be listed in the indications list the:

1. signal must be connected to the DRP function block.
2. setting parameter, IndicationMask, for the input must be set to Show.

Output signals of other function blocks of the configuration will be listed by the signal name listed in the corresponding signal list. Binary input signals are listed by the name defined in the configuration.

The indications can be viewed on the local HMI and via SMS.

Disturbance recorder

Application
Use the disturbance recorder to record analog and binary signals during fault conditions in order to analyze disturbances. The analysis may include fault severity, fault duration and protection performance. Replay the recorded data in a test set to verify protection performance.

Functionality
The disturbance recorder records both analog and binary signal information.

Analog and digital signals can be used as triggers. A trigger signal does not need to be recorded.

A trigger is generated when the analog signal moves under and/or over set limit values. The trig level is compared to the signal’s average peak-to-peak value, making the function insensible to DC offset. The trig condition must occur during at least one full period, that is, 20 ms for a 50 Hz network.

The recorder continuously records data in a cyclic buffer capable of storing the amount of data generated during the set pre-fault time of the collection window. When triggered, the pre-fault data is saved and the data for the fault and post-fault parts of the collection window is recorded.

The RAM area for temporary storage of recorded data is divided into subareas, one for each recording. The size of a subarea depends on the set recording times. There is sufficient memory for four consecutive recordings with a maximum number of analog channels recorded and with maximum time settings. Should no subarea be free at a new disturbance, the oldest recording is overwritten.

When a recording is completed, the post recording process:

- merges the data for analog channels with corresponding data for binary signals stored in an event buffer
- compresses the data without loosing any data accuracy
- stores the compressed data in a non-volatile memory

The disturbance recordings can be viewed via SMS or SCS.

Event recorder

Application
Use the event recorder to obtain a list of binary signal events that occurred during the disturbance.

Functionality
When a trigger condition for the disturbance report is activated, the event recorder collects time tagged events from the 48 binary signals that are connected to disturbance report and lists the changes in status in chronological order. Each list can contain up to 150 time tagged events that can come from both internal logic signals and binary input channels. Events are recorded during the total recording time which depends on the set recording times and the actual fault time.

Events can be viewed via SMS and SCS.

Trip value recorder

Application
Use the trip value recorder to record fault and prefault phasor values of voltages and currents to be used in detailed analysis of the severity of the fault and the phases that are involved. The recorded values can also be used to simulate the fault with a test set.

Functionality
Pre-fault and fault phasors of currents and voltages are filtered from disturbance data stored in digital sample buffers.

When the disturbance report function is triggered, the function looks for non-periodic change in the analog channels. Once the fault interception is found, the function calculates the pre-fault RMS values during one period starting 1,5 period before the fault interception. The fault values are calculated starting a few samples after the fault interception and uses samples during 1/2 - 2 periods depending on the waveform.

If no error sample is found the trigger sample is used as the start sample for the calculations. The estimation is based on samples one period before the trigger sample. In this case the calculated values are used both as pre-fault and fault values.

The recording can be viewed on the local HMI or via SMS.

Monitoring of AC analogue measurements

Application
Use the AC monitoring function to provide three phase or single phase values of voltage and current. At three phase measurement, the values of apparent power, active power, reactive power, frequency and the RMS voltage and current for each phase are calculated. Also the average values of currents and voltages are calculated.

Functionality
Alarm limits can be set and used as triggers, e.g. to generate trip signals.

The software functions to support presentation of measured values are always present in the terminal. In order to retrieve actual values, however, the terminal must be equipped with the appropriate hardware measuring module(s), i.e. Transformer Input Module (TRM) or Optical Receiver Module (ORM).

Monitoring of DC analogue measurements

Application
Use the DC monitoring function to measure and process signals from different measuring transducers. Many devices used in process control uses low currents, usually in the range 4-20 mA or 0-20 mA to represent various parameters such as frequency, temperature and DC battery voltage.

Functionality
Alarm limits can be set and used as triggers, e.g. to generate trip signals.

The software functions to support presentation of measured values are always present in the terminal. In order to retrieve actual values, however, the terminal must be equipped with the mA Input Module (MIM).

Hardware modules

Modules

Modules

Table 1: Basic, always included, modules

Module	Description
Backplane module	The size of the module depends on the size of the case.
Power supply module (PSM)	Available in two different versions, each including a regulated DC/DC converter that supplies auxiliary voltage to all static circuits. • For case size 1/2x19” and 3/4x19” a version with four binary inputs and four binary outputs are used. An internal fail alarm output is also available. • For case size 1/1x19” a version without binary I/O:s and increased output power is used.
Main processing module (MPM)	Module for overall application control. All information is processed or passed through this module, such as configuration, settings and communication.
Human machine interface (LCD-HMI)	The module consist of LED:s, a LCD, push buttons and an optical connector for a front connected PC
Signal processing module (SPM)	Module for protection algorithm processing. Carries up to 12 digital signal processors, performing all measuring functions.

Table 2: Application specific modules

Module	Description
Milliampere input module (MIM)	Analog input module with 6 independent, galvanically separated channels.
Binary input module (BIM)	Module with 16 optically isolated binary inputs
Binary output module (BOM)	Module with 24 single outputs or 12 double-pole command outputs including supervision function
Binary I/O module (IOM)	Module with 8 optically isolated binary inputs, 10 outputs and 2 fast signalling outputs.
Data communication modules (DCMs)	Modules used for digital communication to remote terminal.
Transformer input module (TRM)	Used for galvanic separation of voltage and/or current process signals and the internal circuitry.
A/D conversion module (ADM)	Used for analog to digital conversion of analog process signals galvanically separated by the TRM.

Module	Description
Optical receiver module (ORM)	Used to interface process signals from optical instrument transformers.
Serial communication module (SCM)	Used for SPA/LON/IEC communication
LED module (LED-HMI)	Module with 18 user configurable LEDs for indication purposes

Transformer input module (TRM)

Functionality

A transformer input module can have up to 10 input transformers. The actual number depends on the type of terminal. Terminals including only current measuring functions only have current inputs. Fully equipped the transformer module consists of:

- Five voltage transformers
- Five current transformers

The inputs are mainly used for:

- Phase currents
- Residual current of the protected line
- Residual current of the parallel circuit (if any) for compensation of the effect of the zero sequence mutual impedance on the fault locator measurement or residual current of the protected line but from a parallel core used for CT circuit supervision function or independent earth fault function.
- Phase voltages
- Open delta voltage for the protected line (for an optional directional earth-fault protection)
- Phase voltage for an optional synchronism and energizing check.

A/D-conversion module (ADM)

Functionality

The inputs of the A/D-conversion module (ADM) are fed with voltage and current signals from the transformer module. The current signals are adapted to the electronic voltage level with shunts. To gain dynamic range for the current inputs, two shunts with separate A/D channels are used for each input current. By that a 16-bit dynamic range is obtained with a 12 bits A/D converter.

The input signals passes an anti aliasing filter with a cut-off frequency of 500 Hz.

Each input signal (5 voltages and 5 currents) is sampled with a sampling frequency of 2 kHz.

The A/D-converted signals are low-pass filtered with a cut-off frequency of 250 Hz and down-sampled to 1 kHz in a digital signal processor (DSP) before transmitted to the main processing module.

Binary I/O capabilities

Application

Input channels with high EMI immunity can be used as binary input signals to any function. Signals can also be used in disturbance or event recording. This enables extensive monitoring and evaluation of the operation of the terminal and associated electrical circuits.

Functionality

Inputs are designed to allow oxide burn-off from connected contacts, and increase the disturbance immunity during normal protection operate times. This is achieved with a high peak inrush current while having a low steady-state current. Inputs are debounced by software.

Well defined input high and input low voltages ensures normal operation at battery supply earth faults.

The voltage level of the inputs is selected when ordering.

I/O events are time stamped locally on each module for minimum time deviance and stored by the event recorder if present.

I/O module (IOM)

Application

Use the binary I/O module, IOM, when few input and output channels are needed. The ten output channels are used for trip output or any signalling purpose. The two high speed signal output channels are used for applica-

tions where short operating time is essential, for example time synchronization.

Functionality

The binary I/O module, IOM, has eight optically isolated inputs and ten output relays. One of the outputs has a change-over contact. The nine remaining output contacts are connected in two groups. One group has five contacts with a common and the other group has four contacts with a common, to be used as single-output channels.

The binary I/O module also has two high speed output channels where a reed relay is connected in parallel to the standard output relay.

Note: The making capacity of the reed relays are limited.

Power supply module (PSM)

Application

The 20 W power supply module, PSM, with built in binary I/O is used in 1/2 and 3/4 of full width 19” units. It has four optically isolated binary inputs and five binary outputs, out of which one binary output is dedicated for internal fail.

The 30 W power supply module, PSM, is used to provide power for the extended number of modules in a full width 19” unit. It has one binary output dedicated to internal fail.

Functionality

The power supply modules contain a built-in, self-regulated DC/DC converter that provides full isolation between the terminal and the battery system.

The 20 W power supply module, PSM, has four optically isolated binary inputs and four output relays.

Human machine interface module (HMI)

Application

The human machine interface is used to monitor and in certain aspects affect the way the product operates. The configuration designer can add functions for alerting in case of important events that needs special attention from you as an operator.

Use the terminals built-in communication functionality to establish SMS communication with a PC with suitable software tool. Connect the PC to the optical connector on the local HMI with the special front communication cable including an opto-electrical converter for disturbance free and safe communication.

LED Indication module (HMI-LED)

Functionality

The human-machine interface consists of:

- the human-machine interface (HMI) module.
- the LED module.

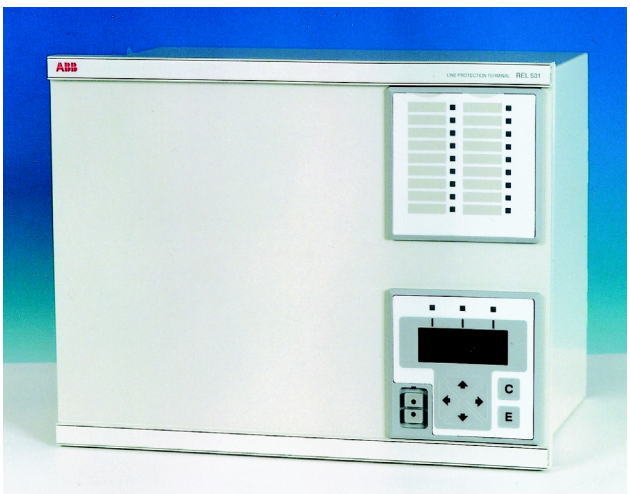

Figure 2: The figure shows the LED (upper) and the HMI (lower).

Serial communication modules (SCM)

Functionality, SPA/IEC

The serial communication module for SPA/IEC is placed in a slot at the rear part of the main processing module. The serial communication module can have connectors for two plastic fibre cables or two glass fibre cables.The incoming optical fibre is connected to the RX receiver input and the outgoing optical fibre to the TX transmitter output. When the fibre optic cables are laid out, pay special attention to the instructions concerning the handling, connection, etc. of the optical fibres. The module is identified with a number on the label on the module.

Functionality, LON

The serial communication module for LON is placed in a slot at the rear part of the Main processing module. The serial communication module can have connectors for two plastic fibre cables or two glass fibre cables The incoming optical fibre is connected to the RX receiver input and the outgoing optical fibre to the TX transmitter output. Pay special attention to the instructions concerning the handling, connection, etc. of the optical fibres. The module is identified with a number on the label on the module.

Data communication modules

Application

The remote terminal communication modules are used both for differential line protection applications and for binary transfer of up to 32 signals to remote end (RTC), for example for distance protections. The following hardware modules are available:

- V.36
- X.21
- RS530
- G.703
- Short-range galvanic module
- Fibre optical communication module
- Short-range fibre optical module

The galvanic data communication modules according to V.36, X.21 and RS530 can be used for galvanic short range communication covering distances up to 100 m in low noise environment. Only contra-directional operation is recommended in order to get best system performance.These modules are designed for 64 kbit/s operation but can also be used at 56 kbit/s.

The galvanic data communication module according to G.703 is not recomended for distances above 10 m. Special attention must be paid to avoid problems due to noise interference. This module is designed only for 64 kbit/s operation.

The short-range galvanic module can be used for communication over galvanic pilot wires and can operate up to distances between 0,5 and 4 km depending on pilot wire cable. Twisted-pair, double-screened cable is recommended.

The fibre optical communication module can be used both with multi-mode and single-mode fibres.The communication distance can typically be up to 30 km for single mode fibre, with high quality fibres even longer. This interface can also be used for direct connection to communication equipment of type FOX from ABB.

The short-range fibre optical module can only be used with multi-mode fibre .The communication distance can normally be up to 5 km. This module can also be used for direct connection to communication equipments of type 21-15xx and 21-16xx from FIBERDATA

Hardware design

Layouts and dimensions

Design

Dimensions, case without rear cover

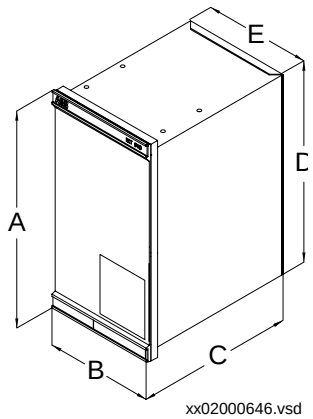

Figure 3: Case without rear cover

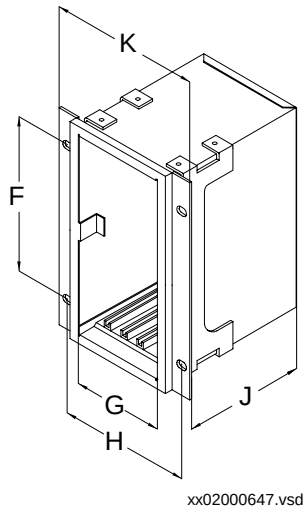

Figure 4: Case without rear cover with 19” rack mounting kit

Case size	A	B	C	D	E	F	G	H	J	K
6U, 1/2 x 19”	265.9	223.7	204.1	252.9	205.7	190.5	203.7	-	186.6	-
6U, 3/4 x 19”		336			318		316	-		-
6U, 1/1 x 19”		448.3			430.3		428.3	465.1		482.6
										(mm)
The H and K dimensions are defined by the 19” rack mounting kit										

Dimensions, case with rear cover

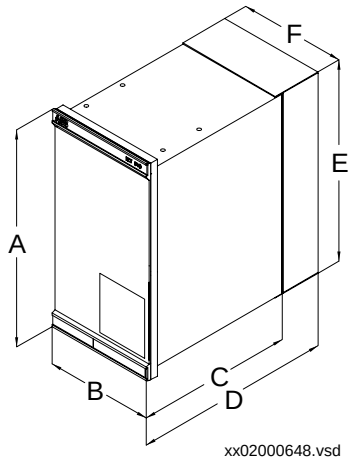

Figure 5: Case with rear cover

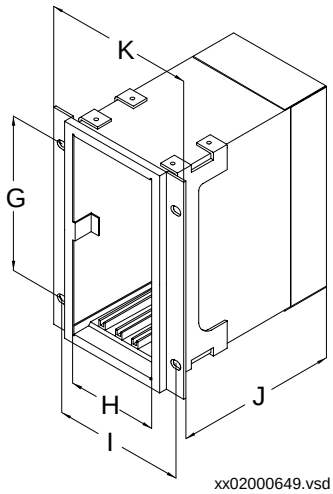

Figure 6: Case with rear cover and 19” rack mounting kit

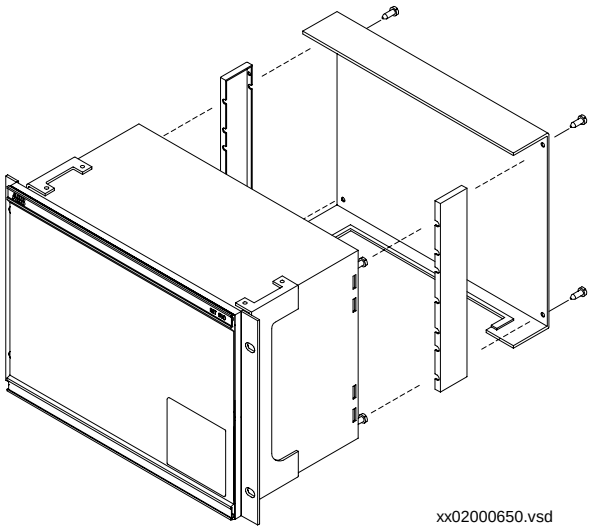

Figure 7: Case with rear cover

Case size	A	B	C	D	E	F	G	H	I	J	K
6U, 1/2 x 19”	265.9	223.7	204.1	245.1	255.8	205.7	190.5	203.7	-	227.6	-
6U, 3/4 x 19”		336				318		316	-		-
6U, 1/1 x 19”		448.3				430.3		428.3	465.1		482.6
(mm) The I and K dimensions are defined by the 19” rack mounting kit.											

Panel cut-outs for REx 500 series, single case

Flush mounting

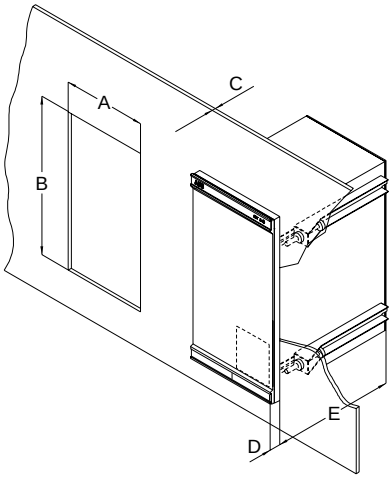

Semi-flush mounting

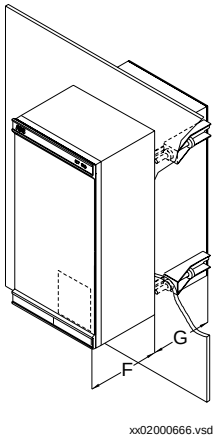

Case size	Cut-out dimensions (mm)	
	A+/-1	**B+/-1**
6U, 1/2 x 19”	210.1	254.3
6U, 3/4 x 19”	322.4	254.3
6U, 1/1 x 19”	434.7	254.3

C = 4-10 mm

D = 16.5 mm

E = 187.6 mm without rear protection cover, 228.6 mm with rear protection cover

F = 106.5 mm

G = 97.6 mm without rear protection cover, 138.6 mm with rear protection cover

Panel cut-out for REx 500 series, side by side cases

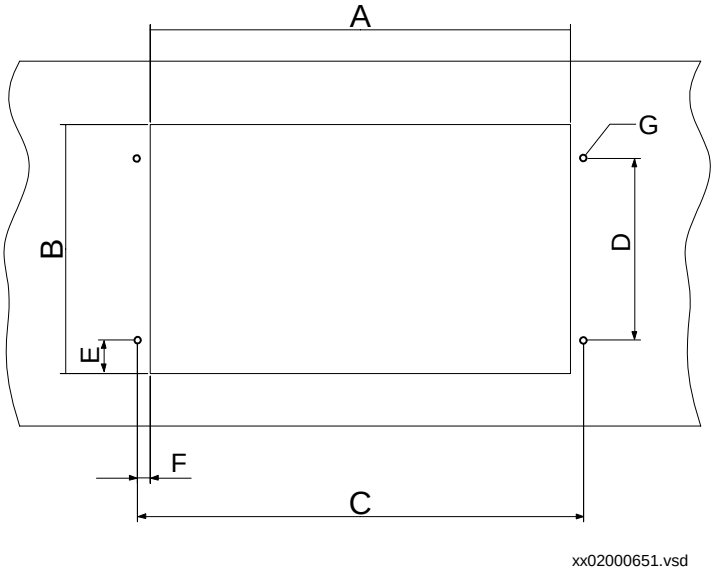

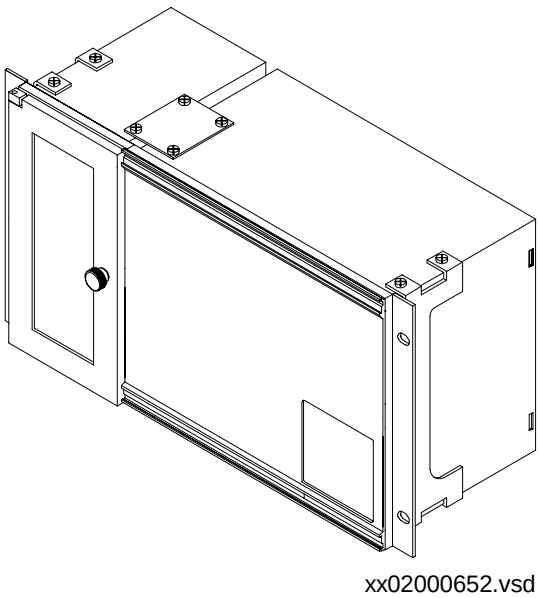

Figure 8: Flush mounting of side by side cases

Case size	Cut-out dimensions						
	A	B	C	D	E	F	G
6U, 3/4 x 19”	326.4	259.3	352.8	190.5	34.4	13.2	ø 6.4
6U, 1/1 x 19”	438.7	259.3	465.1	190.5	34.4	13.2	ø 6.4
							(mm)

Dimensions, wall mounting

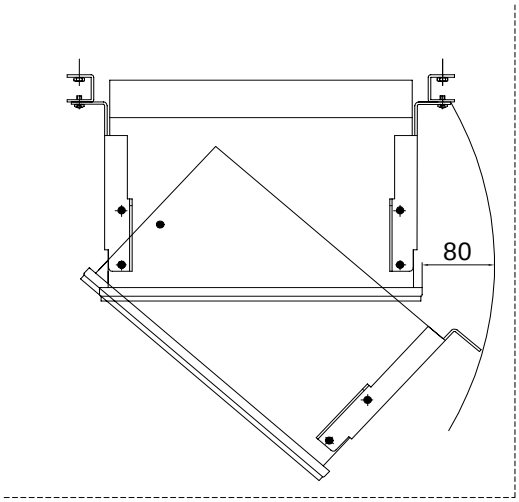

xx02000653.vsd

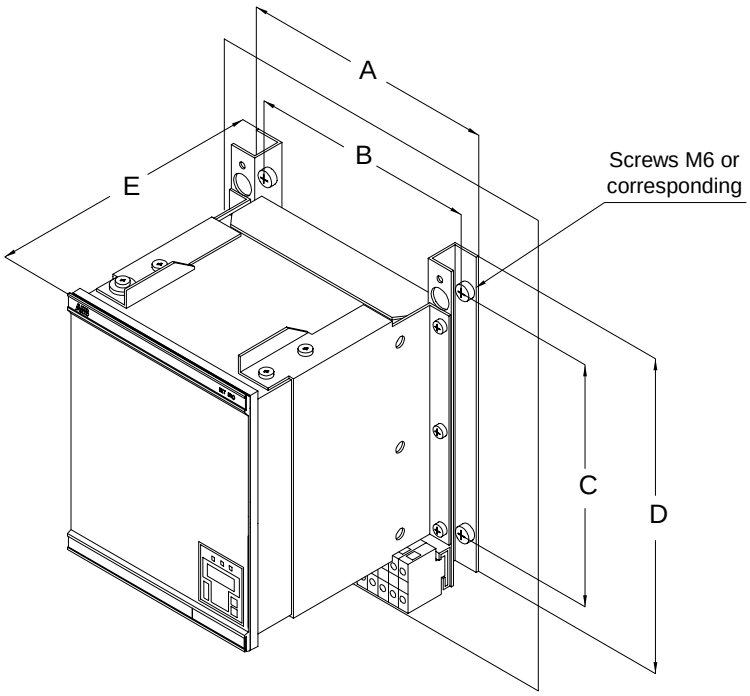

en02000654.vsd

Figure 9: Wall mounting

Case size (mm)	A	B	C	D	E
6U, 1/2 x 19”	292	267.1	272.8	390	247
6U, 3/4 x 19”	404.3	379.4			
6U, 1/1 x 19”	516	491.1			

Terminal diagram

Drawings

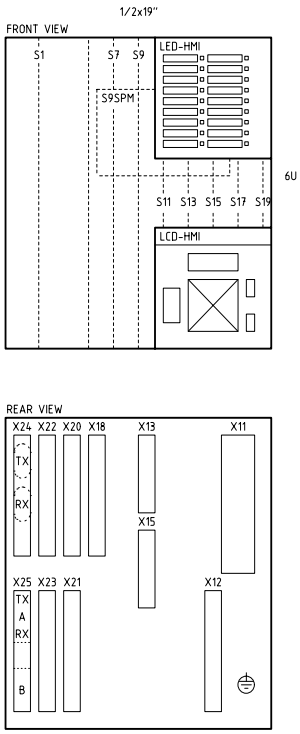

DESIGNATION CORRESPONDING TO CASING		
1/2x19"		
MODULE	FRONT	REAR
TRM 1)	S1	X11,12
ADM 1)	S7	-
ORM 1)	S7	-
MPM	S9	X13,15
PSM	S13	X18
2)	S15	X20,21
2)	S17	X22,23
3)	S19	X24,25

TABLE 1

1) OPTION TRM AND ADM OR ORM

2) BIM, BOM, IOM AND/OR MIM

3) BIM, BOM, IOM, MIM OR DCM

LED-HMI: OPTION

Figure 10: Hardware structure of the 1/2 of full width 19” case

Technical data

General

Definitions

Reference value:

The specified value of an influencing factor to which are referred the characteristics of the equipment.

Nominal range:

The range of values of an influencing quantity (factor) whithin which, under specified conditions, the equipment meets the specified requirements.

Operative range:

The range of values of a given energizing quantity for which the equipment, under specified conditions, is able to perform its intended functions according to the specified requirements.

Table 3: Unit

Material	Steel sheet
Front plate	Aluminium profile with cut-out for HMI and for 18 LED when included
Surface treatment	Aluzink preplated steel
Finish	Light beige (NCS 1704-Y15R)
Degree of protection	Front side: IP40, optional IP54 with sealing strip. Rear side: IP20

Table 4: Weight

Case size	Weight
6U, 1/2 x 19”	≤ 8.5 kg

Table 5: PSM 20/30 W

Quantity	Rated value	Nominal range
Auxiliary dc voltage	EL = (48 - 250) V	+/- 20%

Table 6: TRM, Energizing quantities, rated values and limits

Quantity	Rated value	Nominal range
Current	I_r = 1 or 5 A	(0.2-30) × I_r (0.2-15) x I_r for line differential function
Operative range	(0.004-100) x I_r	
Permissive overload	4 × I_r cont. 100 × I_r for 1 s *)	
Burden	< 0.25 VA at I = 1 or 5 A	
	U_r = 110 V **)	100/110/115/120 V
Frequency	f_r = 50/60 Hz	+/-5%
*) max. 350 A for 1 s when COMBITEST test switch is included.		

Table 7: Temperature and humidity influence

Parameter	Reference value	Nominal range	Influence
Ambient temperature Operative range	+20 °C -25 °C to +55°C	-5 °C to +55 °C	0.01%/°C
Relative humidity Operative range	10%-90% 0%-95%	10%-90%	-
Storage temperature	-40 °C to +70 °C	-	-

Table 8: Auxiliary DC supply voltage influence on functionality during operation

Dependence on:		Within nominal range
Ripple, in DC auxiliary voltage		Max 12%
Interrupted auxiliary DC voltage	Without reset	<50 ms
	Correct function	0-∞ s
	Restart time	<120 s

Table 9: Electromagnetic compatibility

Test	Type test values	Reference standards
1 MHz burst disturbance	2.5 kV	IEC 60255-22-1, Class III
Electrostatic discharge	8 kV	IEC 60255-22-2, Class III
Fast transient disturbance	4 kV	IEC 60255-22-4, Class IV
Radiated electromagnetic field disturbance	10 V/m, 25-1000 MHz	IEC 60255-22-3, Class III IEEE/ANSI C37.90.2

Table 10: Insulation

Test	Type test values	Reference standard
Dielectric test	2.0 kVAC, 1 min.	IEC 60255-5
Impulse voltage test	5 kV, 1.2/50 µs, 0.5 J	
Insulation resistance	>100 MΩ at 500 VDC	

Table 11: CE compliance

Test	According to
Immunity	EN 50082-2
Emissivity	EN 50081-2
Low voltage directive	EN 50178

Table 12: Mechanical tests

Test	Type test values	Reference standards
Vibration	Class I	IEC 60255-21-1
Shock and bump	Class I	IEC 60255-21-2
Seismic	Class I	IEC 60255-21-3

Table 13: Calendar and clock

Parameter	Range
Built-in calender	With leap years through 2098

Table 14: Internal event list

Data	Value
Recording manner	Continuous, event controlled
List size	40 events, first in-first out

Table 15: TIME, Time synchronisation

Function	Accuracy
Time tagging resolution	1 ms
Time tagging error with synchronisation at least once/60 s	+/- 1.5 ms
Drift of clock without synchronisation	+/- 3 ms/min

Table 16: Front communication

Function	Value
Protocol	SPA
Communication speed for the cable	0.3-115 Kbaud
Slave number	1 to 899
Remote change of active group allowed	Yes
Remote change of settings allowed	Yes

Table 17: Available logic function blocks as basic

Update rate	Block	Availability
6 ms	AND	30 gates
	OR	60 gates
	INV	20 inverters
	TM	10 timers
	TP	10 pulse timers
	SM	5 flip-flops
	GT	5 gates
	TS	5 timers
200 ms	TL	10 timers
	TQ	10 pulse timers
	SR	5 flip-flops
	XOR	39 gates

Line differential

Table 18: DIFL - Line differential protection

Function		Setting range	Accuracy
Current scaling, CTFactor		(0.40-1.00) in steps of 0.01	-
Minimum operate current, IMinOp		(20-150) % of (CTFactor x I_r) in steps of 1%	±10% of I_r at I ≤I_r ±10% of I at I >I_r
Slope 1		(20-150) % of I_{bias} in steps of 1%	±5%
Slope 2		(30-150) % of I_{bias} in steps of 1%	±5%
Slope 1/Slope 2 intersection		(100-1000) % of (CTFactor x Ir) in steps of 1%	±10% of I_r at I ≤I_r ±10% of I at I>I_r
Slope at saturation		1.60 x I_{bias}	±5%
Saturation min current		(100-1000) % of (CTFactor x I_r) in steps of 1%	±10% of I_r at I ≤I_r ±10% of I at I >I_r
Function		**Value**	
Operate time	I_{diff} > 2 x I_{bias} and I_{diff} >4 x IMinOp	Typical 28 ms	
Reset time at I_{diff} = 0		Max 55 ms	
Transfer trip operate time		Max 35 ms	

Current

Table 19: IOC - Instantaneous overcurrent protection

Function		Setting range	Operate time	Accuracy
Operate current I>>	Phase measuring elements	(50-2000)% of I1b In steps of 1%	-	+/- 2.5 % of I_r at I ≤I_r +/- 2.5 % of I at I > I_r
	Residual measuring elements	(50-2000)% of I1b In steps of 1%	-	+/- 2.5 % of I_r at I ≤ I_r +/- 2.5 % of I at I > I_r
Operate time at I > 10 × I_{set}			Max 15ms	-
Dynamic overreach at τ< 100 ms			-	< 5%

Table 20: TOC - Time delayed overcurrent protection

Function		Setting range	Accuracy
Operate current I>	Phase measuring elements	(10-400) % of $I1_b$ in steps of 1 %	+/- 2.5 % of I_r at I ≤ I_r
			+/- 2.5 % of I at I >I_r
	Residual measuring elements	(10-150) % of $I4_b$ in steps of 1 %	+/- 2.5 % of I_r at I ≤ I_r
			+/- 2.5 % of I at I >I_r
Time delay	Phase measuring elements	(0.000-60.000) s in steps of 1 ms	+/- 0.5 % of t +/- 10 ms
	Residual measuring elements	(0.000-60.000) s in steps of 1 ms	+/- 0.5 % of t +/- 10 ms
Dynamic overreach at τ< 100 ms		-	< 5 %

Table 21: THOL - Thermal overload protection

Function	Setting range	Accuracy
Mode of operation	Off / NonComp / Comp (Function blocked/No temp. compensation/Temp. comp.)	
Basic current IBase	(10 - 200) % of I1b in steps of 1 %	+/- 2.5% of I_r
Temperature rise at IBase TBase	(0 - 100) °C in steps of 1 °C	+/- 1°C
Time constant tau	(1 - 62) min in steps of 1 min	+/- 1 min

Function	Setting range	Accuracy
Alarm temperature TAlarm	(50 - 150) °C in steps of 1°C	
Trip temperature TTrip	(50 - 150) °C in steps of 1 °C	
Temp. difference for reset of trip TdReset	(5 - 30) °C in steps of 1°C	

Table 22: Thermal overload protection mA input

Function	Setting range	Accuracy
Upper value for mA input MI11-1_Max	-25.00 - 25.00 mA in steps of 0.01 mA	+/- 0.5% of set value
Lower value for mA input MI11-I_Min	-25.00 - 25.00 mA in steps of 0.01 mA	+/- 0.5% of set value
Temp. corresponding to the MI11-1_Max setting MI11-MaxValue	-1000 - 1000 °C in steps of 1 °C	+/- 1% of set value +/- 1°C
Temp. corresponding to the MI11-1_Min setting MI11-MinValue	-1000 - 1000° C in steps of 1 °C	+/- 1% of set value +/- 1°C

Table 23: TEF - Independent and dependent time delayed residual protection function

Parameter		Setting range	Accuracy
Start current, definite time or inverse time delay I_N		5-300% of I_r in steps of 1%	+/-5% of set value
Operate value for directional current measurement	Forward I_N at φ=65 degrees	5-35% of I_r in steps of 1%	+/-1.5% of I_r
	Reverse	60% of the setting for forward operation	+/-1.5% of I_r
Definite time delay		0.000 - 60.000 s in steps of 1ms	+/- 0.5 % +/-10 ms
Time multiplier for inverse time delay k		0.05-1.10 in steps of 0.01	According to IEC 60255-3
Normal inverse characteristic $I = I_{meas}/I_{set}$		$t = \frac{0.14}{I^{0.02} - 1} \cdot k$	IEC 60255-3 class 5 +/- 60 ms
Very inverse characteristic		$t = \frac{13.5}{I - 1} \cdot k$	IEC 60255-3 class 7.5 +/- 60 ms

Parameter	Setting range	Accuracy
Extremely inverse characteristic	$t = \frac{80}{I^2 - 1} \cdot k$	IEC 60255-3 class 7.5 +/- 60 ms
Min. operate current for dependent characteristic	100-400% of IN in steps of 1%	+/-5% of I_{set}
Minimum operate time	0.000-60.000 s in steps of 1 ms	+/- 0.5 % +/-10 ms
Characteristic angles	65 degrees lagging	+/-5 degrees at 20 V and I_{set}=35% of I_r
Logarithmic characteristic	$t = 5.8-1.35 \cdot \ln I$	+/- 5 % of t at $I = (1.3-29) \times 3I_0$
Minimum polarising voltage	1 % of U_r	At 50 Hz: 1% of U_r +/-5% At 60 Hz: 1% of U_r -15% to -5%
Reset time	<70 ms	-

Secondary system supervision

Table 24: Current circuit supervision

Function	Setting range	Accuracy
Operate current I>	5-100% of I1b in steps of 1%	+/-2.5% of I_r

Logic

Table 25: TR - Trip logic

Parameter	Value	Accuracy
Setting for the minimum trip pulse length, tTripMin	0.000 - 60.000 s in steps of 0.001 s	+/-0.5% +/-10 ms

Table 26: Serial communication (SPA)

Function	Value
Protocol	SPA
Communication speed	300, 1200, 2400, 4800, 9600, 19200 or 38400 bit/s
Slave number	1 to 899
Remote change of active group allowed	yes/no
Remote change of settings allowed	yes/no
Connectors and optical fibres	glass or plastic

Table 27: Serial communication (LON)

Function	Value
Protocol	LON
Communication speed	1.25 Mbit/s
Connectors and optical fibres	glass or plastic

Table 28: Serial communication (IEC 60870-5-103)

Function	Value
Protocol	IEC 60870-5-103
Communication speed	9600, 19200 bit/s
Connectors and optical fibres	glass or plastic

Monitoring

Table 29: Disturbance report setting performance

Data	Setting range
Pre-fault time	50-300 ms in steps of 10 ms
Post-fault time	100-5000 ms in steps of 100 ms
Limit time	500-6000 ms in steps of 100 ms
Number of recorded disturbances	Max. 10

Table 30: Disturbance recorder setting performance

Function	Setting range
Overcurrent triggering	0-5000% of Inb in steps of 1%
Undercurrent triggering	0-200% of Inb in steps of 1%
Overvoltage triggering	0-200% of Unb in steps of 1% at 100 V sec.
Undervoltage triggering	0-110% of Unb in steps of 1%

Table 31: Disturbance recorder performance

Data			Value
Number of binary signals			48
Number of analog signals			10
Sampling rate			2 kHz
Recording bandwidth			5-250 Hz
Total recording time with ten analog and 48 binary signals recorded. (The amount of harmonics can affect the maximum storage time)			40 s typically
Voltage channels	Dynamic range		(0.01-2.0) x U_r at 100/200 V sec.
	Resolution		0.1% of U_r
	Accuracy at rated frequency	$U \leq U_r$	2.5% of U_r
		$U > U_r$	2.5% of U

Data			Value
Current channels	Dynamic range	Without DC off-set	(0.01-110) $\times I_r$
		With full DC off-set	(0.01-60) $\times I_r$
	Resolution		0.5 % of I_r
	Accuracy at rated frequency	$I \leq I_r$	+/-2.5 % of I_r
		$I > I_r$	+/-2.5 % of I

Table 32: Event recorder

Function		Value
Event buffering capacity	Max. number of events/disturbance report	150
	Max. number of disturbance reports	10

Table 33: Mean values (AC-monitoring)

Function	Nominal range	Accuracy
Frequency	(0.95 - 1.05) x f_r	+/- 0.2 Hz
Voltage (RMS) Ph-Ph	(0.1 - 1.5) x U_r	+/- 2.5% of U_r, at $U \leq U_r$ +/- 2.5% of U, at $U > U_r$
Current (RMS)	(0.2 - 4) x I_r	+/- 2.5% of I_r, at $I \leq I_r$ +/- 2.5% of I, at $I > I_r$
Active power*)	at $\|\cos \varphi\| \geq 0.9$	+/- 5%
Reactive power*)	at $\|\cos \varphi\| \leq 0.8$	+/- 7.5%
*) Measured at U_r and 20% of I_r		

Table 34: MIM - mA measuring function

Function	Setting range	Accuracy
mA measuring function	+/- 5, +/- 10, +/- 20 mA 0-5, 0-10, 0-20, 4-20 mA	+/- 0.1 % of set value +/-0.005 mA
Max current of transducer to input	(-25.00 to +25.00) mA in steps of 0.01	
Min current of transducer to input	(-25.00 to +25.00) mA in steps of 0.01	
High alarm level for input	(-25.00 to +25.00) mA in steps of 0.01	
High warning level for input	(-25.00 to +25.00) mA in steps of 0.01	
Low warning level for input	(-25.00 to +25.00) mA in steps of 0.01	
Low alarm level for input	(-25.00 to +25.00) mA in steps of 0.01	
Alarm hysteresis for input	(0-20) mA in steps of 1	
Amplitude dead band for input	(0-20) mA in steps of 1	
Integrating dead band for input	(0.00-1000.00) mA in steps of 0.01	

Hardware modules

Table 35: Binary inputs

Inputs	RL24	RL48	RL110	RL220
Binary inputs	BIM: 16, IOM: 8, PSM: 4			
Debounce frequency	5 Hz (BIM), 1 Hz (IOM)			
Oscillating signal discrimi-nator.*	Blocking and release settable between 1-40 Hz			
Binary input voltage RL	24/30 VDC +/-20%	48/60 VDC +/-20%	110/125 VDC +/-20%	220/250 VDC +/-20%
Power consumption (max.)	0.05 W/input	0.1 W/input	0.2 W/input	0.4 W/input
*) Only available for BIM				

Table 36: Binary outputs

Function or quantity	Trip and Signal relays	Fast signal relays
Binary outputs	BOM: 24, IOM: 10, PSM: 4	IOM: 2
Max system voltage	250 V AC, DC	250 V AC, DC
Test voltage across open contact, 1 min	1000 V rms	800 V DC

Function or quantity		Trip and Signal relays	Fast signal relays
Current carrying capacity	Continuous	8 A	8 A
	1 s	10 A	10 A
Making capacity at inductive load with L/R>10 ms	0.2 s	30 A	0.4 A
	1.0 s	10 A	0.4 A
Breaking capacity for AC, cos φ>0.4		250 V/8.0 A	250 V/8.0 A
Breaking capacity for DC with L/R<40ms		48 V/1 A	48 V/1 A
		110 V/0.4 A	110 V/0.4 A
		220 V/0.2 A	220 V/0.2 A
		250 V/0.15 A	250 V/0.15 A
Maximum capacitive load		-	10 nF

Table 37: SMS communication via front

Function	Value
Protocol	SPA
Communication speed for the terminals	300, 1200, 2400, 4800, 9600 Kbaud
Slave number	1 to 899
Change of active group allowed	Yes
Change of settings allowed	Yes

Table 38: Cable connection requirements for SPA/IEC connection

	Glass fibre	Plastic fibre
Cable connector	ST connector	HFBR, Snap-in connector
Fibre diameter	62.5/125 µm 50/125 µm	1 mm
Max. cable length	500 m	30 m

Table 39: LON - Cable connection requirements for LON bus connection

	Glass fibre	Plastic fibre
Cable connector	ST-connector	HFBR, Snap-in connector
Fibre diameter	62.5/125 µm 50/125 µm	1 mm
Max. cable length	1000 m	30 m

Table 40: Galvanic data communication module

Interface type	According to standard	Connector type
V.36/V11 Co-directional (on request)	ITU (CCITT)	D-sub 25 pins
V.36/V11 Contra-directional	ITU (CCITT)	D-sub 25 pins
X.21/X27	ITU (CCITT)	D-sub 15 pins

Interface type	According to standard	Connector type
RS530/RS422 Co-directional (on request)	EIA	D-sub 25 pins
RS530/RS422 Contra-directional	EIA	D-sub 25 pins
G.703 Co-directional	ITU (CCITT)	Screw

Table 41: Short-range galvanic module

Data transmission	Synchronous, full duplex
Transmission rate	64 kbit/s (256 kBaud; code transparent)
Clock source	Internal or derived from received signal
Range	max 4 km
Line interface	Balanced symmetrical three-state current loop (4 wires)
Connector	5-pin divisible connector with screw connection
Insulation	2,5 kV 1 min. Opto couplers and insulating DC/DC-converter
	15 kV with additional insulating transformer

Table 42: Fibre optical communication module

Optical interface		
Type of fibre	Graded-index multimode 50/125µm or 62,5/125µm	Single mode 9/125 µm
Wave length	1300 nm	1300 nm
Optical transmitter injected power	LED -17 dBm	LED -22 dBm
Optical receiver sensitivity	PIN diode -38 dBm	PIN diode -38 dBm
Optical budget	21 dB	16 dB
Transmission distance	typical 15-20 km [a)]	typical 30-70 km [a)]
Optical connector	Type FC-PC	Type FC-PC
Protocol	ABB specific	ABB specific
Data transmission	Synchronous, full duplex	Synchronous, full duplex
Transmission rate	64 kbit/s	64 kbit/s
Clock source	Internal or derived from received signal	Internal or derived from received signal
[a)] depending on optical budget calculation		

Table 43: Short-range fibre optical module

Data transmission	Synchronous, full duplex
Transmission rate	64 kbit/s
Clock source	Internal or derived from received signal
Optical fibre	Graded-index multimode 50/125µm or 62,5/125µm
Wave length	850 nm
Optical connectors	ST
Optical budget	15 dB
Transmission distance	max 3,5 km
Protocol	FIBERDATA specific

Ordering

Guidelines

Carefully read and follow the set of rules to ensure problem-free order management. Be aware that certain functions can only be ordered in combination with other functions and that some functions require specific hardware selections.

Basic hardware and functions

Platform and basic functionality

Basic REx 5xx platform and common functions in 1/2 sized 19” casing

Manuals on CD

Operator’s manual (English)
Installation and commissioning manual (English)
Technical reference manual (English)
Application manual (English)

Binary I/O capabilities

Binary I/O resided on power supply module
Binary I/O module

Measuring capabilities

Transformer module
A/D module

Line differential

Line differential protection *(DIFL)*

Current

Instantaneous overcurrent protection *(IOC)*
- Phase element
- Residual element

Time delayed overcurrent protection *(TOC)*
- Phase element
- Residual element

Thermal phase overload protection *(THOL)*
Definite and inverse time-delayed residual overcurrent protection *(TEF)*
- Nondirectional element

Secondary system supervision

Current circuit supervision *(CTSU)*

Logic

Trip logic *(TR)*
- Three pole trip

Monitoring

Disturbance recorder *(DRP)*

Event recorder

Trip value recorder

Analog AC monitor software

Analog DC monitor software (Requires optional mA-transducer module, MIM)

Product specification

REL 551-C1	Quantity:	☐	1MRK 004 480-AA

Rule: Select only one alternative.

Engergizing quantities for binary inputs on power supply module	24/30 V	☐	1MRK 002 238-AA
	48/60 V	☐	1MRK 002 238-BA
	110/125 V	☐	1MRK 002 238-CA
	220/250 V	☐	1MRK 002 238-DA

Note: Auxiliary dc voltage EL, connected to the power supply module, is (48-250) V.

Measuring capabilities

Add measuring capabilities by selecting input energizing options from the following tables.

Rule: Select only one alternative.

Rated measuring input energizing quantities	1A	☐	1MRK 000 157-CD
	5 A	☐	1MRK 000 157-DD

Optional functions

Additional HMI language

Note: Only one alternative is possible

Second language beside English	German	☐	1MRK 001 459-AA
	Russian	☐	1MRK 001 459-BA
	French	☐	1MRK 001 459-CA
	Spanish	☐	1MRK 001 459-DA
	Italian	☐	1MRK 001 459-EA
Customer specific language	Contact your local ABB representative for availability		

Hardware

Communication interfaces for remote terminal communication

Rule: If Communication interfaces for remote terminal communication is selected Binary signal transfer to remote end (RTC) must be ordered.

Co-directional V.36/V.35 galvanic interface	☐	On request
Contra-directional V.36/V.35 galvanic interface	☐	1MRK 000 185-BA
Co-directional RS530/RS422 galvanic interface	☐	On request
X.21 galvanic interface	☐	1MRK 000 185-CA
Contra-directional RS530/RS422 galvanic interface	☐	1MRK 000 185-EA
Fiber optical modem	☐	1MRK 000 195-AA
Short range galvanic modem	☐	1MRK 001 370-AA
Short range fiber optical modem	☐	1MRK 001 370-DA
Co-directional G.703 galvanic interface	☐	1MRK 001 370-CA

Additional binary I/O capabilities

Rule: Select only one alternative.

Energizing quantities for binary I/O module	24/30 V	☐	1MRK 000 173-GB
	48/60 V	☐	1MRK 000 173-AC
	110/125 V	☐	1MRK 000 173-BC
	220/250 V	☐	1MRK 000 173-CC

SCS and SMS communication capabilities

SMS communication, only one alternative can be selected

SPA/IEC 60870-5-103 interface	Plastic fibers	☐	1MRK 000 168-FA
	Glass fibers	☐	1MRK 000 168-DA

SCS communication, only one alternative can be selected

LON interface	Plastic fibers	☐	1MRK 000 168-EA
	Glass fibers	☐	1MRK 000 168-DA

Test switch

Test switch module RTXP 24 mounted side-by-side to the terminal in RHGS case	☐	1MRK 000 371-CA
With internal earthing	☐	RK 926 215-BB
With external earthing	☐	RK 926 215-BC
On/off switch for the DC-supply	☐	RK 795 017-AA

Protection cover

Cover for rear area including fixing screws and assembly instruction	6U, 1/2 x 19”	☐	1MRK 000 020-AC

Mounting accessories

19” rack mounting kit	☐	1MRK 000 020-BR
Wall mounting kit	☐	1MRK 000 020-DA
Flush mounting kit	☐	1MRK 000 020-Y
Semiflush mounting kit	☐	1MRK 000 020-BS
Additional mounting seal for IP54 protection of flush and semiflush mounted terminals	☐	1MKC 980 001-2
Side-by-side mounting kit	☐	1MRK 000 020-Z

Accessories

Converters

V.36 to G.703 converter with 48 VDC power supply	☐	1MRK 001 295-AA
V.35/V.36 converter for short range fiber optical modem	☐	1MRK 001 295-CA
X.21/G.703 converter for short range fiber optical modem	☐	1MRK 001 295-DA

Key switch

Key switch for setting lockout	Quantity:	☐	1MRK 000 611-A

Front communication cable

Front connection cable for PC (Opto/9-pole D-sub)	Quantity:	☐	1MKC 950 001-2

Manuals

One CD with Operator’s manual, Technical reference manual, Installation and commissioning manual and Application manual is always included for each terminal.

Rule: Specify the number of extra CD’s requested

CD with all manuals	Quantity:	☐	1MRK 002 241-AA

Rule: Specify the number of printed manuals requested

Operator’s manual	Quantity:	☐	1MRK 506 104-UEN
Technical reference manual	Quantity:	☐	1MRK 506 105-UEN
Installation and commissioning manual	Quantity:	☐	1MRK 506 106-UEN
Application manual	Quantity:	☐	1MRK 506 118-UEN

Customer feedback

For our reference and statistics we would be pleased to be provided with the following application data:

Country: End user:

Station name: Voltage level: kV

Related documents

Technical overview brochure

Accessories for REx 5xx*2.3	1MRK 514 009-BEN
CAP 540*1.2	1MRK 511 112-BEN

Manufacturer

ABB Automation Technology Products AB
Substation Automation
SE-721 59 Västerås
Sweden
Telephone: +46 (0) 21 34 20 00
Facsimile: +46 (0) 21 14 69 18
Internet: www.abb.com/substationautomation