The cost benefit of modern Substation Automation in Electrical High Voltage Installations

Bertil Lundqvist
ABB Automation Technology Products
(Sweden)

Yngve Aabo
BKK Netteknik
(Norway)

ABSTRACT
The new technology in modern Substation Automation systems, with protection, local control, monitoring and serial communication gives a number of new opportunities and cost benefits when it comes to operation, maintenance and fault analysis. Also new automatic restoration systems, based on information from the substations can be considered to reduce the outage time.

This paper describes the cost benefit of the evolution of conventional control, monitoring and protection equipment for substations into **"The integrated Substations"**, fully utilising **I**nformation **T**echnology, **IT**.

Instead of separate islands with various stand-alone equipment such as protection relays, local control equipment, event recorders, disturbance recorders, Remote Terminal Units, etc., the paper discusses the cost benefits of an integrated approach for **Substation Automation**, based on modern microprocessor-, software- and communication/ information technology. With a process bus replacing the conventional cabling, a **new approach with functional analysis**, both during normal operation and following a fault, can be utilised.

Various manufacturers have described some examples of process bus application. However, in IEC a new standard, IEC 60 850- 8 station bus and –9 process bus will give new possibilities.

Keywords; Substation Automation, protection, local control, monitoring, communication, economy, process bus, function analysis.

1 INTRODUCTION

In the restructured and competitive electricity market, there is a strong pressure to reduce the costs, both the investment cost and the cost for operation and maintenance. At the same time there is an increased focus on the quality of supply. The trend is that the network companies become subject to regulations considering quality aspects.

In such a market, it is not sufficient to provide a technically satisfactory solution for the main functionality of, for example a new or retrofitted substation. The impact on the life cycle cost for investments in information technology on the operational cost, including cost for not delivered energy, and maintenance costs must be considered. It becomes more and more important to aim at a balance between investment costs and costs associated with quality of supply guarantees or penalties during the life time of the station.

This paper addresses new aspects of utilizing information from the Substation Automation (protection and control) system for both the primary equipment and the secondary system in the context of quality of supply.

In Norway unwanted operation of protection equipment is a significant contributor to energy not supplied and thereby customers' costs of interruptions. These problems received increased focus due to the introduction of financial compensation for energy not supplied.

The main objective is to give incentive to owners the networks to operate and maintain the system in a socio-economic optimal way.

Bertil Lundqvist, ABB Automation Technology Products
72159 Västerås, Sweden E-mall bertil.j.lundqvist@se.abb.com

However, the principle behind this regulation is valid in all electrical network companies, even if the regulations/ penalties are not (yet) introduced.

2 INVESTMENT CRITERIA FOR A MODERN SUBSTATION

For every investment, the real need from the power system must be identified.

2.1 Power System criteria

The most important parameters from the power system point of view are:

♦ Outage costs

The factors, that influence the outage costs are of course different for different power network companies, as outlined in the introduction. However, to reduce the outage costs some prerequisites exist:

- Technical requirements
- Availability (**M**ean **T**ime **T**o **F**ailure)
- Maintenance
- Repair/replacement time (**M**ean **T**ime **T**o **R**epair)

♦ Investment costs

The investment costs also have some major influencing parameters.

- Technical solutions
- Space
- Safety
- Environmental impact
- Commissioning

♦ Operation and maintenance strategy

The main factors for the operation and maintenance:

- Operational and maintenance information (IT strategy)

The project time and outage time for the assembly and commissioning are also parameters to be considered.

To summarize whether an investment is profitable?

♦ Direct Investment cost

♦ Costs for operation and maintenance
  - The investment's reliability and availability
  - Information availability

3 IMPACTS ON THE SECONDARY SYSTEM BY THE PRIMARY SYSTEM DESIGN.

In a conventional double busbar arrangement, the main availability influence comes from maintenance of the disconnectors. With a single busbar and by incorporating the disconnectors in the breaker, a significant increase in availability of the substation is achieved.

An example of the reduced complexity in a modern substation with a single busbar arrangement with a combined SF_6-breaker/ disconnector is shown below.

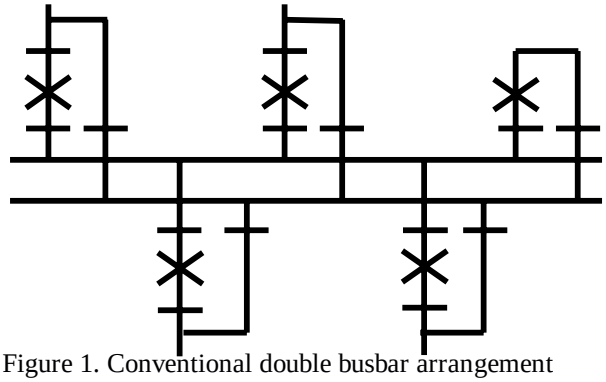

Figure 1. Conventional double busbar arrangement

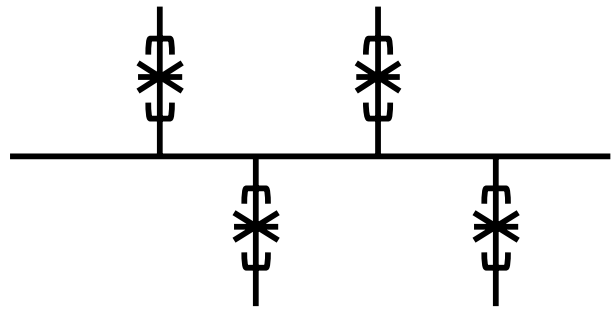

Figure 2. Single busbar arrangement with combined breaker/ disconnector

To increase availability, the breaker/ disconnector can be made as a truck breaker (draw-out). Then a faulty breaker/ disconnector can be replaced in hours, thus further increasing the availability. The availability increase has for a project in Sweden been calculated to have a factor of 4 (No draw-out)

Impacts on the secondary system

As shown above, a simplified busbar arrangement has a great impact on availability of the High-Voltage system. However, a simplified busbar arrangement has also a great impact on the complexity of the secondary system. It is easy to envisage that the simplified busbar arrangement also will give a simplified, and thus more economic, secondary system. A reduced number of mirror relays, position indications, simplified autorecloser schemes, simplified interlocking, simplified busbar protection, etc., will have a major impact on both economy and availability.

4 ECONOMICAL COMPARISION FOR THREE TYPES OF SECONDARY SYSTEM DESIGNS

Today, in principal, three types of Station Automation systems are in operation

- Conventional
- Numerical with station bus
- IT- systems with process bus (and station bus) (Test installations)

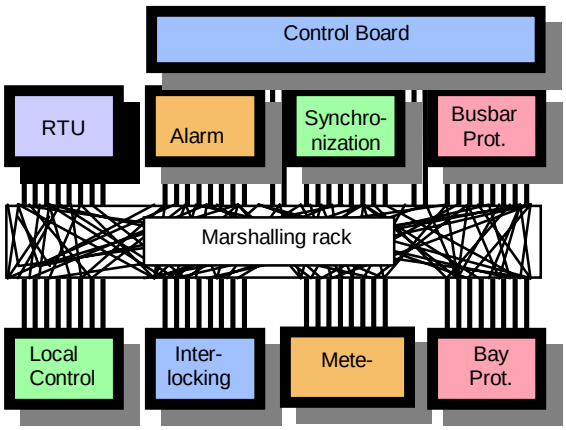

Figure 3. Conventional secondary system

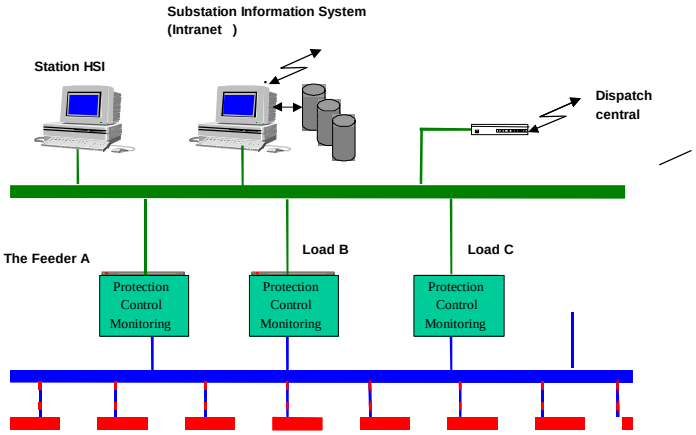

Figure 4 Numerical system with station bus

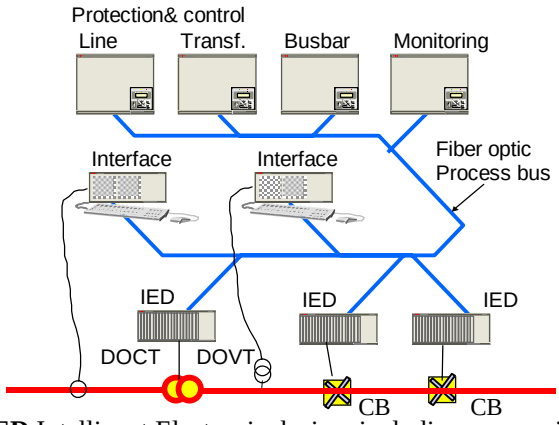

IED Intelligent Electronic devices including sensors in High Voltage apparatus
DOVT/DOVT Optical current/voltage transducers.

Figure 5 IT-system with process bus

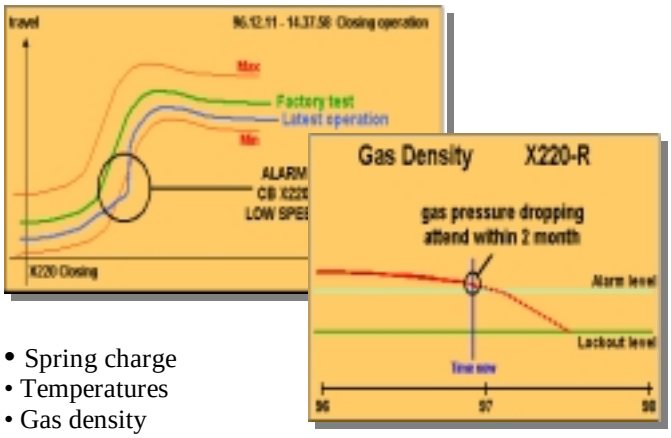

- Spring charge
- Temperatures
- Gas density
- Time-travel curve

Figure 6. Example of information from a High-Voltage breaker with built-in sensors

Investment comparison

Equipment etc	Conventional	Numerical/ station bus	IT –system/process bus
Cabling	30 %	15 %	5 %
Control Building	5 %	4 %	2 %
Control Board	4 %	-	-
SCADA/RTU/Gateway	3 %	1 %	1 %
Local control	6 %	20 %	10 %
Protection	25 %	25 %	25 %
Monitoring	3 %	2 %	10 %
DC battery	1 %	0,5 %	0,5 %
Design/Engineering	14 %	10 %	15 %
Assembly	8 %	5 %	2 %
Commissioning	1 %	0,5 %	0,5 %
Sensors in HV equipment	-	-	10 %
Local communication/server	-	5 %	10 %
Relative cost	**100 %**	**87 %**	**91 %**

5 RISK ANALYSIS

Risk analysis is a tool to optimise the design, both from a technical and an economical point of view. One of the main results of the risk analysis performed in the IEEE report -Ref [1] is that a numerical single protection system has the highest security, and almost the same dependability as a redundant system.

The increased availability, due to the self- supervision in numerical equipment, has a major impact on the result of the risk analysis. Thus, the risk analysis may require the reassessment of the protection and control system design, with an exchange from old electromechanical/static equipment to numerical equipment before the technical lifetime has expired. The difference between old and new equipment is significant.

The failure rates, repair times and other relevant parameters can be altered to mirror the fault statistics from other utilities, without any major influence on the conclusion of this report.

Risk analysis with operational information.

Power utilities should make use of risk analysis considerations for planning stations and protection and local control solutions. These considerations are in the light of the new income regulation frame and the implementation in Norway (CENS), as an example. In this analysis the consequences are connected to the incorrect functions of the protection and local control equipment

- **Dependability:** Probability to operate when it is expected. (No missing functions)
- **Security:** Probability to not operate incorrectly. (No unwanted functions).
- **Availability:** Probability of a device or system of being able to perform the expected function when it is wanted

Included in these considerations are fault and interruption statistics as well as information from the protection performance (correct and incorrect). Reliability calculations and risk analysis can be used to consider questions such as:

- Does existing equipment satisfy those requirements that we need? For example, from the CENS point of view.
- Can it be economically acceptable from the point of view of CENS to change old equipment and replace it with newer units with self-monitoring, bus systems and sensor technique?
- Are single or redundant protection systems the best solution?

With numerical substations it is possible to go a step further in the use of probability considerations. The use of probability considerations in, for example the maintenance procedures, is achieved by using the information from the monitoring system in a numerical substation automation system, together with fault statistics.

6 COSTS OF OPERATION AND MAINTENANCE

The modern systems with self-supervision and monitoring of both primary and secondary systems will require a change of maintenance philosophy both for primary and secondary equipment.

It will also be possible to operate the power system closer to its limits due to the monitoring and available information in real time of the system parameters and values.

6.1 Maintenance philosophy- Secondary equipment

Faults on the protection and local control equipment in the 33 – 420 kV transmission system are a significant contributor to the number of disturbances or forced outages in the power system. Two types of reasons dominate the number of faults and cases of energy not supplied:

Technical equipment (mostly unspecified causes) and human errors, mostly during operation of the power system, maintenance testing, or incorrect setting of the protection and local control system.

Fault statistics show that unwanted functions from the protection and local control equipment are dominant among all fault reasons. For equipment in voltage levels ranging from 33 to 420 kV, more than 50% of the energy not supplied (ENS) is attributed to unwanted functions, while almost 15 % are due to missing functions. The main reasons for unwanted functions can be grouped as follows. See also figure 7.

- Human error, 22%.

75% of these faults are introduced during work with protection and local control equipment.

- Construction, installation and maintenance, 24%.

About 50 % of these are caused by wrong settings, something that can be blamed on insufficient relay plans (see below). Incorrect commissioning can also be a reason.

- Equipment, 43%.

The main reason is probably the wrong choice of equipment (no built-in self supervision and monitoring information), and incorrect technical solutions.

<u>One way to reduce the unwanted functions is to keep the maintenance people away from the stations.</u>

This will also give an economical benefit to reduce the maintenance costs.

This report focuses on methods to supervise the secondary and primary equipment in substations with numerical solutions. The maintenance procedures in the station will thus be reduced to a minimum, and the majority only on demand.

6.2 Commissioning of numerical equipment in grid stations

From a utility point of view, it is necessary to split the commissioning into two different parts.

Factory test

As the vendor in their factory normally prefabricates new control and protection cubicles, a factory test has to be performed before shipping to the customer. The testing, which can be performed in the factory, depends of course on type of the SA system. A system with a station bus can be tested with reference to the station bus.

A system with a process bus can be almost fully tested in the factory. Thus, a large portion of the tests specified in tests on site can be performed in the factory, thus reducing the commissioning time.

Equipment tests on site – functional testing

During commissioning the manufacturer/vendor/utility personnel normally perform different tests on the different devices and bay functions in the system.

Functional testing is a very important part of putting numerical integrated substation automation systems into operation. Testing of the substation as a whole, according to the utility principal solutions, is the most important part. It is also important to put the "*not necessary function*" out of operation. From the utility point of view, it is advantageous to divide the substation functional testing into four different levels:

Level 1; The UNIT level consists of the numerical devices.
Level 2; The BAY level consists of the numerical units, the different HV-apparatus, conventional or numerical, including the connections.
Level 3; The STATION level consists of the different bays together with the substation level equipment.
Level 4; The SYSTEM level consists of the total station automation system together with the communication with the central dispatch control system.

The economical benefit of numerical solutions is of course that a lot of the testing can be done as factory test, thus reducing the outage time. A cost comparison between commissioning numerical and traditional systems will give a significant advantage to numerical equipment.

7 INFORMATION TECHNOLOGY

Stations with numerical units and serial data communication provide better possibilities to obtain relevant information when a fault occurs. This should be used for the operation and the maintainability of these stations.

In which way will this information availability influence the maintainability and fault analysis process of the protection and local control units?

When a fault occurs in the network, the equipment in the stations should behave as planned, i.e. in such a way that the consequences of the fault are minimised. This is much more important today when disconnection will have economical consequences in the form of the Norwegian penalty for not delivered energy, CENS. As mentioned before, the fault analysis is the best tool to evaluate the performance of the system including the planning of the used parameters and their settings in the station.

Following are some examples of the information, that can be accessed by using numerical equipment with communication. Note that a lot of information for maintenance purposes can also be collected during normal operation.

<u>Oscillographic recorder curves and event records, both during emergency conditions and normal operation</u>.
Detailed information from individual bay units.
Currents before, during, and after the fault.
Possibility to collect curves in the form of COMTRADE format files to "play back" in the bay units that may be under checking/control.
Information collected from primary components.
Comparison of information from different stations.

A significant change in the way in which to monitor the condition of the equipment, both under normal and fault situations, compared with that from stations without communication can be expected. This is especially true for the monitoring of:

Bay units (Protection, local control and supervision units).
Communication between bay units (self-monitored units).
Tripping circuits (if a process bus is used between bay units and primary components).
Primary components.
Communication with the rest of the world (other stations, control centre, etc.).

7.1 Function analysis

It is possible to use the available of information for everyday operations and in a system in which the fault analysis is a part (probably the most important) of the maintenance routines.

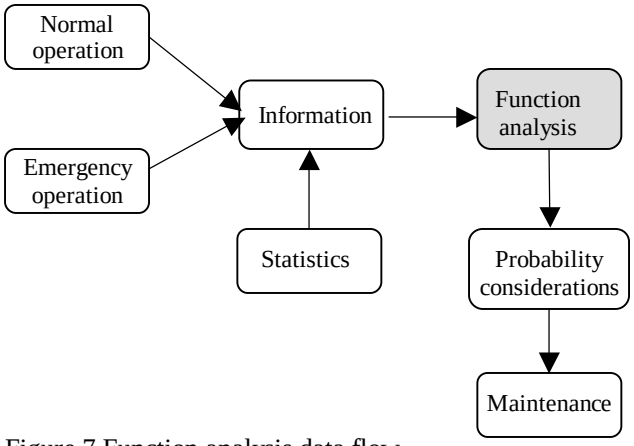

Figure 7 Function analysis data flow.

Function analysis during normal operation.
The numerical technology gives possibility for complete station self-monitoring, see figure 4 and 5. This information leads to a radical change about the knowledge of the station availability. In the past, faults in the station were discovered by maintenance work or by the occurrence of faults in the power system. In self-monitored stations this information will be available at the same moment that a fault occurs in the station components:
Station bus
Bay units (Protection and Control)
Process bus
Optical transformers

Self-monitoring increases the bay units security, dependability and availability. The indexes are defined in CIGRE. The highest is the influence on security. Security is defined as: Ability to not operate incorrectly (unwanted functions). Self-monitoring reduces the probability for unwanted functions because it is possible to restrain those functions completely or partially through associated signals. Self-monitoring will also increase the availability of protection and control units due to the reduction of the time required to detect a fault. Compared with equipment without self-monitoring, where faults were discovered under routine testing, this is a dramatic improvement.

Information from the self-monitoring system.
Under normal operation all communications to the protection and control units and the links to primary components are self-monitored. This means that more than 90% of the station is continuously monitored and will give a signal if there is a fault in the system. This information, together with the possibility to get other types of information, can ensure that the probability of a correct function for the next fault is high.

Control of the current and voltage transformer
If the currents and voltages are correct, the probability of correct function of the current and voltage transformers are high.

Control of the parameter setting
Under normal operation it is possible, with help of communication, to check the parameters in all devices. This reduces the probability of unwanted functions.

Function analysis
After a fault, it is possible, with the help of available information, to check and control most of the individual components in the station and the operation of the fault clearing system. Further it is possible to control functions from each single bay unit, internal communication, connections between bay units and primary components, signal output, auto- reclosing cycle etc.

Function analyses can be used to control the different functions and components, and can replace most of the traditional maintenance routines. A numerical station with self-monitoring can be operated with an important reduction of maintenance of both the primary and secondary equipment.

The function analysis in normal and emergency operation will lead to the following cost benefits:
A reduced number of unwanted functions when working in the stations.
Less unwanted functions due to the possibility of daily checking of the equipment via communication.
Reduced cost of maintenance.
Increased understanding of how the system functions, due to the required fault analysis work.
Higher control of the settings of the protection and control devices, and therefore a lower CENS.
Higher control of the equipment in the daily operations.

From the interruption statistics provided by the regulator (Norwegian Water Resources and Energy Directorate), we find that not delivered energy (ENS) per year in the period 1995 – 1999 has been 33,4 GWh on average. 60 % is due to forced outages (not notified interruptions) and 40 % due to planned disconnections (notified interruptions).

The annual amount of compensation for not delivered energy, CENS, in Norway can be estimated to about 90 MEUR: **60 MEUR due to not notified interruptions (forced outages)** and 30 MEUR due to notified interruptions (planned disconnections). To estimate the contribution to interruption costs or CENS from protection and control faults, the CENS amount related to forced outages (60 MEUR) is used as the starting point.

ENS due to forced outages for Norway in total can be found from the total fault statistics. The distribution system 1 – 22 kV counts for 73 % and the transmission system 33 – 420 kV 27 %.

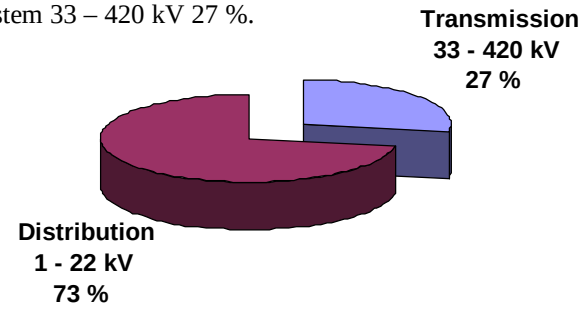

Figure 8 Energy not supplied(ENS) due to forced outages

The function analysis as a maintenance method can be used both on protection and control equipment and primary equipment. The fault statistics show, that incorrect functions from protection and control are the biggest contribution factor to the forced outages. The ENS due to protection and control amounts to approximately 17 % of ENS at the levels 33 – 420 kV. This makes a CENS amount of 60 MEUR·0,27·0,17 = **2,75 MEUR per year and about 6250 EUR per fault. [9]**

If this amount is distributed on different types of protection and control, 47 % is related to lines and cables and 32 % to transformers. Distributed on causes for failure, 40 % is due to human activities and 44 % to technical equipment. Finally, distributed on different fault types, 54 % (1,5 MEUR.) is related to unwanted operation and 13 % missing operation. [9]

The statistics from the distribution system are not very good. The recordings and reporting of faults at distribution level are voluntary. Nearly half of the network companies in Norway have been reporting data only for the last years. Since the number of protections is lower per power system component and the protection and control system simpler, it can be assumed that the contribution from protection and control in the distribution system to ENS and CENS to be somewhat lower than at the higher voltage levels. If we say 10 % this makes a CENS amount of **60 MEUR·0,73·0,10 = 4,4 MEUR** per year. Consequently, there is a reason to believe that the contribution is higher in MEUR than from protection and control in the transmission system. [9]

7.2 Additional information utilisation.

The new numerical techniques with serial communication give bigger possibilities for the exchange of information between stations and the control centre. The challenge for the utilities is to really adapt the organisation to really use the available information.

It is the manufacturer's responsibility that we users can exchange information between stations independently of who makes them. As per today, serial communication between the control centre and the stations is a problem. This can also be true for station and control centre delivered by the same manufacturer, but it is almost an unsolvable problem in the case that these are delivered by different manufacturers. The new IEC standards for station bus IEC 60850-8 and process bus IEC 60850-9 will hopefully solve these problems

8 SUMMARY

Function analysis is a way of connecting the information, that new numerical substations give, to the maintenance of a substation. It is possible to use this method both on primary and secondary equipment. Protection and control gives the highest contribution to forced outages.

The annual amount of compensation for not delivered energy, CENS, in Norway can be estimated to about 90 MEUR: **60 MEUR due to not notified interruptions (forced outages)** and 30 MEUR due to notified interruptions (planned disconnections). The cost for energy not supplied due to protection and control amounts to approximately 17 % of the total cost at the levels 33 – 420 kV. This gives the compensation cost **2,75 MEUR/year for incorrect behaviour of protection and control and about 6250 EUR per fault in the transmission system.**
The fault statistic shows that 40 % of the failures are caused by human activities and 44 % by technical equipment.

The maintenance procedures based on function analysis will have an economical impact by reducing the number of incorrect operations. A significant contribution will be made by reducing the work in the substations, and thus reduce the possibility of an unwanted function by human error. The information technology will also make it possible to supervise the entire power system in a better way, with the ultimate goal to minimise the energy not supplied and the distribution cost.

9 REFERENCES

[1] Risk analysis- a new aspect on protection and local control design, IEEE 2001,Yngve Aabo, Ronny Goin, Bertil Lundqvist
[2] Economic Justification of Local Back-Up Protection, CIGRÉ 210, Johannesburg, 1997. Messing, L.,
[3] Experience data from the Norwegian fault statistics.
[4] The new paradigm in station automation Cigré 1998 Knut Faber, Leif Jonsson, Bertil Lundqvist.
[8] "The Intelligent Air Insulated Switchgear and Substations", CEPSI, Malaysia, 1997
M. Degerfält, O. Kristofersson, M. Adolfsson
[9]G H Kjølle, Y Aabø, B T Hjartsjø, Reliability of protection and control equipment in the context of compensation for power supply interruptions, CIRED 2001