Protection system design for assurance of dependability and security

Lars Messing
ABB Automation Products
Västerås, Sweden

Sture Lindahl
ABB Automation Products
(now ABB Alstom)
Västerås, Sweden

Bertil Svensson
OKG AB
Oskarshamn, Sweden

Summary

To get a high degree of both security and dependability of the fault clearance system a "dual two out of two" concept can be used for the protection system. The system can be applied for the protection of different kind of equipment. In this paper protection of power plant main circuits are discussed.

In a "dual two out of two" protection system different combinations of protections are used. The simplest solution is that identical protections operate in parallel. With this solution there is however a risk that systematic errors will result in either lack of dependability or lack of security. Systematic errors can be due to hardware faults, errors in design or configuration of the protection system or errors in the setting of the protection.

For each type of fault or other events that have to be detected and cleared by the protection system, suitable combinations are discussed.

1. Background

Traditionally dependability has had priority over security in many fault clearance systems. This means that there is often a high degree of redundancy. In many applications for generator protection, line protection and protection of other equipment, there are two main protection systems operating in parallel. To assure the dependability the two systems are separated as much as possible. The following design criteria of the protection system is often used:

- There are two auxiliary DC-systems serving the two main protection systems. The DC-systems can be totally separated or partially separated. The simplest solution is separation via main fuses of a DC-system with one battery only.
- The two main protection systems are fed from separated measurement transformers, or from different cores (windings) in the same measurement transformer.
- The two main protection systems have separated wiring.
- The circuit breakers have separate trip coils for operation from each main protection system.

In addition to the main protection systems there are sometimes also back-up protections.

The traditional fault clearance systems, with a high degree of redundancy, give a high degree of dependability; i.e. the probability to clear faults is high. There is however a risk of low security, i.e. the probability of unwanted operation is high. In many applications this is not acceptable. The reason for this can be the following:

- Unwanted trip will often result in a disturbance more severe than the planning criteria. Therefor the consequence can be a power system collapse, with large costs as a consequence.
- Unwanted trip can lead to disconnection of energy customers. In many countries the customers can get economic compensation for interruptions of power supply. This economic compensation shall reflect the real cost of the customer, which in many cases can be very high due to customer production losses etc.
- In large thermal power plants, especially nuclear plants, an unwanted trip will often lead to a shut down of the plant for some time (from some hours and up to several days). Due to the loss of energy sales from the plant, this will lead to economic losses.

There is often a requirement to design the fault clearance systems so that both high security and dependability can be achieved.

2. Principles for design

There are several principles for design of the fault clearance system. Here we discuss two different principles where both security and dependability is at a high level.

2.1 Two out of three design

One traditional way to get a system with both high security and dependability is to use a two out of three system. This means that we have three parallel systems where at least two of them must operate to get the primary wanted function. The two out of three logic system is however often very difficult and expensive to realize. There must be three different systems working in parallel. It is preferred that the systems are separated as much as possible, with separate DC auxiliary systems, separate wiring, etc. The systems must however be linked together to realize the different logical combinations. The most extreme application would be to use a

primary breaker configuration as shown below. In practice this solution is impossible due to economic and practical reasons.

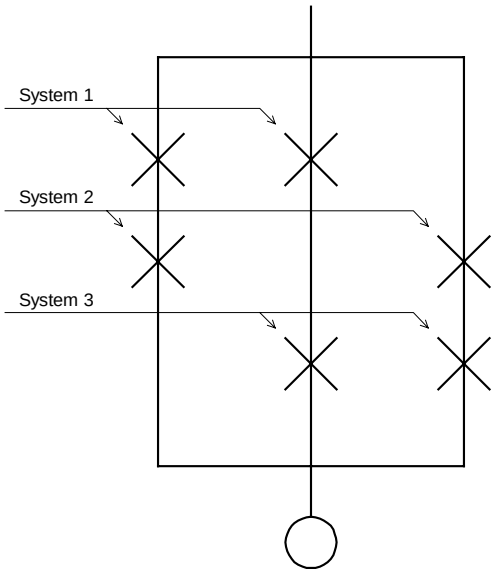

If only one breaker is used, the two out of three logic function would be realized by means of auxiliary relays in order to avoid galvanic connection between the subsystems.

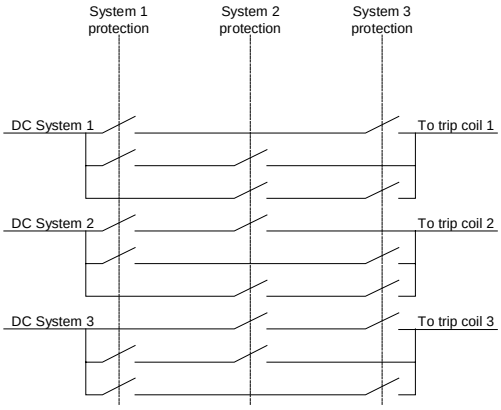

This alternative will give sufficient security but the dependability is not guaranteed in case of a breaker failure, not related to the trip coils.

2.2 Dual two out of two design

An alternative is to use a system with ”dual two out of two” logic. The base of this system is two separated subsystems. In each subsystem there are two functions where both have to operate for fault clearance function. For trip, function from one system only is needed. The principle design of the “dual two out of two” system is shown below:

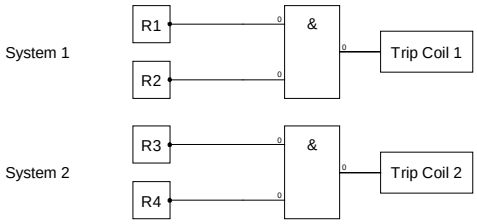

R1 and R2 are protection belonging to subsystem 1 while R3 and R4 are protection belonging to subsystem 2. In its most simple design the protections R1, R2, R3 and R4 are identical. Systematic errors in design or setting could however lead to loss of security or dependability. Therefor a mixture of different types of protection is preferred.

3. Power plant protection application

The generator and step-up transformer normally have a large number of different protections. This is due to the large number of faults and events that have to be detected and tripped. The large number of protections will give a certain risk of unwanted operation, i.e. lack of security if a conventional main 1 - main 2 protection system is used. In addition to this an unwanted trip of a large thermal power plant will often give severe economic consequences. Therefor the “dual two out of two” concept will give great benefits.

In the design of the protection system each event, of interests for the protection system, has to be studied. As an example we study the phase to phase generator stator short circuit.

3.1 Generator stator phase to phase short circuit

The following different protection types can detect the phase to phase short circuit in a generator:

- Generator differential protection. This is a sensitive protection with a very short operation time.
- Block differential protection. The sensitivity of this protection is often limited compared to the generator differential protection. The operation time is fairly short.
- Underimpedance protection. To assure selective tripping from the under-impedance protection, for some of the generator short circuits, the protection has to be delayed. An overreach zone of the underimpedance protection can however serve as an unblocking criterion for operation of other protections.
- Phase overcurrent protection. To assure selective tripping from the overcurrent protection, for some of the generator short circuits, the protection has to be delayed. An overreach zone of the overcurrent protection can however serve as an unblocking

criterion for operation of other protections. Another difficulty with the phase overcurrent protection is that the setting must be chosen so that the maximum load current will not cause an unwanted trip. For some short circuits the fault current can be rather small, especially if the fault duration is long.

- Undervoltage protection. This protection will detect faults both in the generator and outside the generator (in the step-up transformer, in the external network and in the power plant auxiliary power system. Therefor the start signal from the protection can be used as an unblocking criterion for operation of other protections. As a standalone protection the undervoltage trip has to have delayed function.
- Step-up transformer phase overcurrent protection. This protection will only detect faults in the generator when the aggregate is connected to the external network. As we normally want to detect short circuits in the generator also during the start up the generator (before phasing to the network), the protection is not acceptable as generator protection.

In the "dual two out of two" protection system we can see that there are some alternatives for the generator phase to phase short circuit protection. Below one alternative is shown.

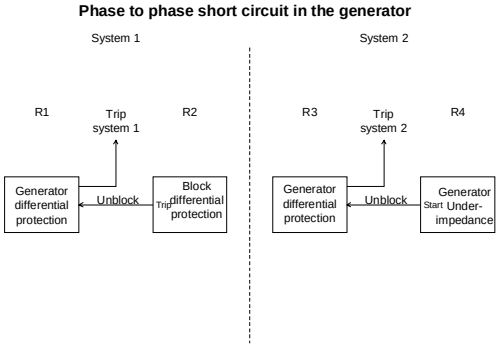

In the example we use generator differential protections in both system 1 (protection R1) and system 2 (protection R3). The reason of this is that no other protection will give instantaneous and selective trip for generator phase to phase short circuits. The block differential protection we will also detect faults in the step up transformers and is therefor suitable as unblocking criterion (criterion R2). There are several other criteria that can be chosen as unblocking signal, but in system 2 the start signal of an overreach zone in an underimpedance protection is used (criterion R4). With the proposed solution we have gained high security with almost the same dependability as by the use of redundant generator differential protection without unblocking criterion. The disadvantage with the solution is that the sensitivity of the generator differential protection is reduced to some extent.

3.2 Other faults and events of importance for power plant protection

For generation aggregates a number of fault types and events have to be studied, in order to design the protection system. We have to study the following.

3.2.1 Generator thermal overload

- Security aspects

To assure security unblocking criterion is needed.

- Dependability aspects

As the active power input to the generator normally is limited, thermal overload of a generator is due to over-excitation. Over-excitation is normally a consequence of a fault in the magnetization system. Therefor it is considered that there is no need for redundancy of the protection function.

3.2.2 Stator earth fault

For 80 % earth fault protection combinations with residual voltage and residual current protection can be used.

- Security aspects

A combination with residual voltage protection and earth fault current unblocking will give sufficient security.

For 100 % stator earth fault protection only one protection can be used. It is suggested to have signal only, from the 100 % stator earth fault protection.

- Dependability aspects

Full two out of two design will give sufficient dependability.

3.2.3 Phase to phase and phase to earth short circuit in the external network

- Security aspects

In this system we have a protection and an unblocking criterion.

- Dependability aspects

The normal fault clearance will be made by operation of protection in the network (line protection, transformer protection, etc.). Therefor the generator protection will serve as back-up protection, and is needed in one system only.

3.2.4 Rotor earth fault

It is difficult to realize more than one protection for this fault type. The "dual two out of two" system can therefor not be used.

3.2.5 Negative sequence generator current

- Security aspects

It is difficult to realize more than one protection for this fault type. The “dual two out of two” system can therefor not be used. The appearance of negative sequence current is normally a consequence of unbalance in the network, e.g. pole discordance of circuit breakers.

- Dependability aspects

The faults are normally detected and cleared by protections in the external system. Redundancy in the generator protection system is therefore not needed.

3.2.6 Deviating frequency

Deviating frequency is a consequence of power unbalance in the power system. There are several automatic actions made in the power system to restore the frequency: activation of spinning reserves, HVDC emergency power, load shedding, etc.

- Dependability aspects

It is therefor not necessary to have redundancy in the protection system for deviating frequency.

- Security aspects

To assure the security, an unblocking criterion is needed for the protection function.

3.2.7 Deviating voltage

Deviating voltage is a consequence of reactive power unbalance in the power system. There are several automatic actions made in the power system to restore the voltage: change of generator excitation, switching of shunt reactors and capacitor banks, etc.

- Dependability aspects

It is therefor not necessary to have redundancy in the protection system for deviating frequency.

- Security aspects

To assure the security an unblocking criterion is needed for the protection function.

3.2.8 Underexcitation of the generator (loss of field)

The protection can be realized by means of directional current or power protection. The unblocking can be realized by means of undervoltage or underimpedance.

- Security aspects

The dual two out of two design will give sufficient security.

- Dependability aspects

Redundancy in each system will give sufficient dependability.

3.2.9 Loss of synchronism

This is a consequence of an event in the external system (short circuit with long trip time or undamped oscillations) or loss of excitation of the generator.

- Dependability aspects

It is therefor not necessary to have redundancy in the protection system for loss of synchronism. There is also some redundancy in the underexcitation protection system.

- Security aspects

In the system, having the protection, a protection an unblocking criterion is necessary.

3.2.10 Reverse generator power

The reverse power is a consequence of loss of the primary power to the turbine. Reverse power can have serious consequences for the turbine in thermal power plants.

- Security aspects

If possible an unblocking function should be used.

- Dependability aspects

It is considered that operators supervise the situation, why protection is needed in one system only.

3.2.11 Inadvertent closing of the generator breaker

- Dependability aspects

As the inadvertent closing of the generator breaker is a fault itself and this is probably observed directly by operators, redundancy is not considered to be necessary.

3.2.12 Internal fault in the step-up transformer

Here we have a number of protections that can be combined in the “dual two out of two” protection system design. Both security and dependability can therefor be assured to acceptable values.

3.2.13 Overexcitation of the step-up transformer

The risk of overexcitation of the step-up transformer appears only at the start up sequence when the generator breaker is closed and the aggregate breaker is opened.

- Security aspects

The protection can be realized by a V/Hz protection with an underfrequency protection as unblocking criterion.

3.2.14 Breaker failure

If the generator- or aggregate breaker fails to operate correctly, this can lead to damage of the aggregate. For some faults both the generator and aggregate breaker is opened, but for other events only one of the breakers is opened. Therefor breaker failure protection is necessary for some applications.

- Security aspect

To assure the security it is necessary to have breaker failure protection with some unblocking criterion.

4. Line protection applications

The design, to assure both security and dependability is important for the generation

aggregate protection, due to the large number of protective relays used. There is however a possibility for improvement also for line protection. The events to of interest for the line protection, in a transmission system, are the following:

- Phase to phase short circuits
- Phase to earth short circuits
- Series faults (unsymmetry)
- Line circuit breaker failure
- Power swing
- Overload
- Overvoltage
- Loss of voltage

In modern line protection several functions are integrated in one unit. As is mentioned, there is a benefit of having different kinds of parallel protection.
For short circuits on the line the protection in one of the systems could be a differential protection with underimpedance unblocking. The protection in the other system could be a distance protection with overcurrent unblocking.

5. Conclusions

A protection system can be designed with high security and dependability and if the “dual two out of two” principle is used. It is however important to analyze the different faults and events of interest for the protection system. The different protection principles should be combined in a way so that principal errors are avoided. This means that the same protection principle should not be used in the parallel systems. It should also be considered if local redundancy is necessary for all faults and events to be detected and tripped by the protection. For many events remote back-up is sufficient.

6. References

Protection of modern generators, Sture Lindahl, ABB Generation AB, S-72176 VÄSTERÅS, Sweden, **11th International Conference on Power System Protection PSP'98, Bled, Slovenia, pp. 153-159, 30 September - 2 October, 1998.**

Contact person:
Lars Messing
ABB Automation Products AB
Substation Automation Division
SE-721 59 Västerås
Sweden
Tel: +46 21 32 13 02
Fax: +46 21 32 16 33
e-mail: lars.messing@se.abb.com