Transformer differential protection

RADSB

1MRK 504 002-BEN
Page 1
Issued June 1999
Changed since July 1998
Data subject to change without notice

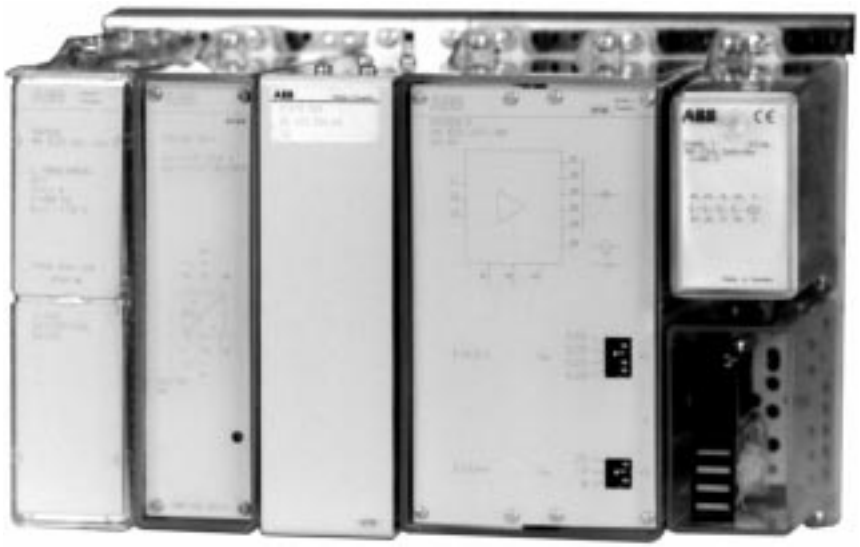

(SE970883)

Features

- Three phase differential protection with two, three, five or six through-current restraint inputs
- Complete phase and earth fault protection
- A high voltage cable, length up to about two km, can be included in the differential zone
- Harmonic restrained operate time approx. 30 ms at 3 times pick-up current
- Unrestrained operate time 10-20 ms at 2 times pick-up current with minimum impulse time of 3 ms
- Variable percentage restraint for external fault security, even at use of on-load tap-changer
- Second harmonic restraint from all three phases for inrush security
- Fifth harmonic restraint from all three phases for overexcitation security
- Sensitivity can be set to 20, 25, 35 or 50 per- cent of rated current, 1 A or 5 A
- Unrestrained operation settable to 8, 13 or 20 times relay rated current
- Provided with separate interposing CT's for ratio and phase angle matching and equalizing of zero sequence current
- Long CT secondary leads are feasible with 1 A relay
- Built-in trip relay, indicator and test switch

Type SLCE interposing current transformers:

- Secondary current 1 A or 5 A
- Three different ranges of ratios reconnectible in steps of 4 to 6%:
  - 0,65-2,60/1 A
  - 2,55-10,1/1 A
  - 2,85-11,2/5 A
- Fixed ratio with or without equalizing winding available on request
- Available as single-phase units and three-phase sets

Application

The RADSB is a protective relay intended for all types of three-phase power transformers. By including additional input restraint modules, up to 6 transformer windings or restraining inputs can be connected. The relay is also well suited for generator and step-up transformer overall protection, often including the auxiliary transformer in the protected zone.

The non-linear percentage restraint characteristic provides the required restraint for external faults. This makes the relay suitable for use with multi-winding transformers, autotransformers or in a system where one transformer winding is directly connected to two

Application (cont'd)

or more breakers. The characteristics are designed to provide excellent internal fault sensitivity.

The RADSB relay also has an unrestrained instantaneous function which responds to the total differential current (less any dc component).This will provide redundant operation for severe internal faults.

The restraining voltages from the second and fifth harmonic filters for each phase are paralleled and the result used for harmonic restraint for each phase. The polyphase harmonic restraint circuitry prevents the relay from operating on inrush currents yet has a minimum effect on relay sensitivity if an internal fault occurs during energizing. The fifth harmonic is used to prevent operation of the relay due to possible overexcitation of the transformer. Overexcitation protection should be provided by a delayed V/Hz relay e.g. type RATUB which has an inverse-time operating characteristic.

Interposing CT's are used to balance the main CT ratios. In addition, interposing CT's may be used to reduce the effective lead burden of long secondary leads. The differential zone of the relay can include up to about two kilometers of high voltage cable, since adequate filtering provides security against high current oscillations. In such a case, the current in the CT circuit is reduced by specific interposing CTs.

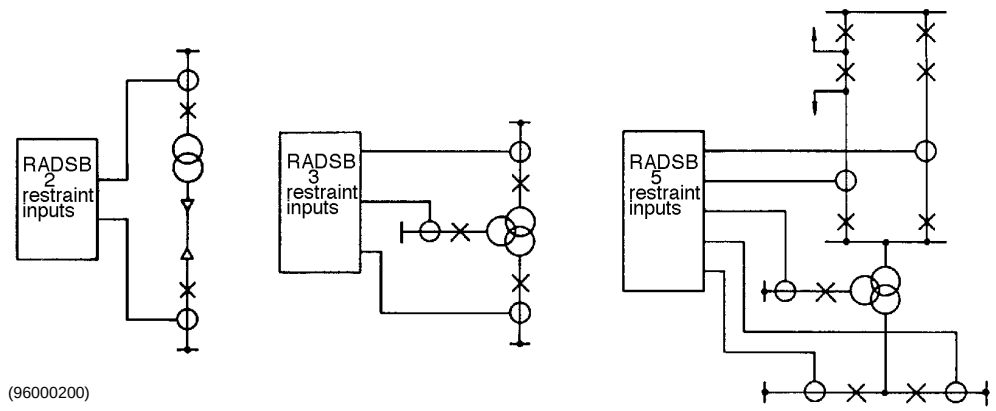

Fig. 1 Application examples for the RADSB transformer different relay

Design

The RADSB relay is available with two, three, five or six through-current restraint inputs, and can be used for dual-winding or multi-winding transformers which have one or more circuit-breaker for each winding. The relay is built up of the following modules:

- Test switch, type RTXP 18
- Dc-dc converter, type RXTUG 22H
- Transformer units, type RTQTB 060 and 061
- Measuring unit, type RXDSB 4
- Tripping relay, type RXMS 1 or RXME 18
- Indicator, type RXSGA 1 or flag indicator relay, type RXSF 1

In versions with an indicator, LED's indicate unrestrained operation and restrained operation and also the phase which caused the latter operation. In versions with a flag relay, a red flag becomes visible when the differential relay operates. All versions are listed in the ordering table.

The RADSB relay can be connected directly to the main current transformers; however, when this is not practical, interposing CT's are used for ratio and phase-angle matching purposes. Interposing CT's provide an additional point of insulation so that different sets of main CT's can be earthed independently of each other. In the case of long CT leads, interposing current transformers can be used to reduce the secondary CT lead burden to the relay (use of 1 A relay is advantageous).

When internal faults such as short-circuits between phases, earth faults or inter-turn short-circuits occur, the differential relay rapidly initiates disconnection of the supply to the transformer. On the other hand, the RADSB is stable for differential currents

which are caused by external faults, inrush currents or overvoltages. The operate values for restrained and unrestrained operation are set with switches on the measuring unit. The operate times of the relay are shown in Fig. 2.

RADSB has static measuring circuits with active filters to enable optimum utilization of the harmonics in the differential current while restraining inrush currents and overvoltages. The restraint limits in the case of external faults are shown in Fig. 3.

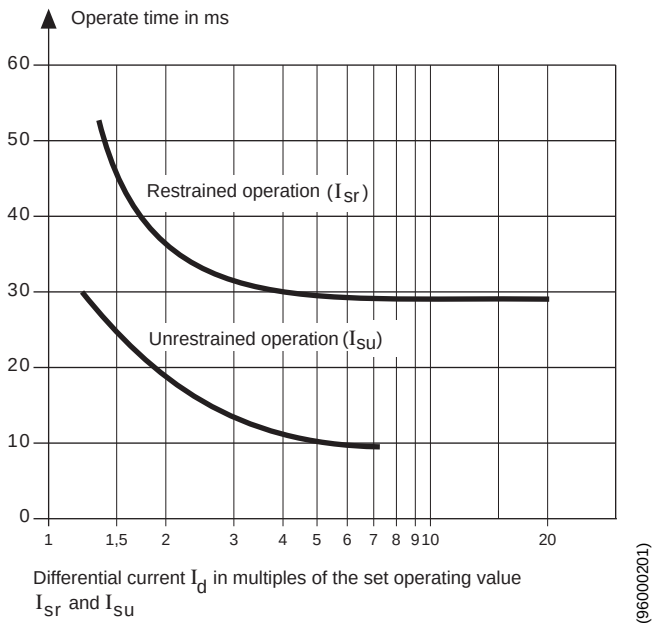

Fig. 2 Operate times for restrained and unrestrained operation, with RXMS 1 as the tripping relay

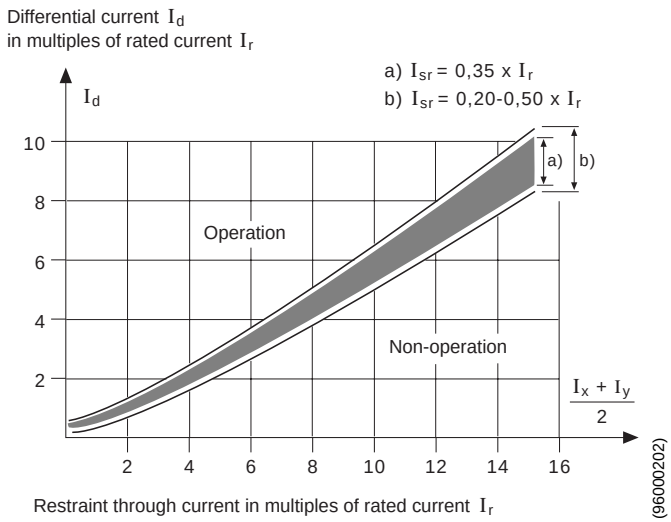

Fig. 3 The restraint characteristic for external faults is variable and is adapted to the magnitude of the through current $(I_x+I_y)/2$ where I_x and I_y are the highest incoming and out-going currents, respectively, of the transformer

Design (cont'd)

Type SLCE interposing current transformers:

The reconnectible SLCE 12 has three secondary windings connected to a terminal block with six terminals, marked 1 to 6, and two primary windings with intermediate taps connected to a terminal block with six terminals, marked 7 to 12. The transformer also has a third terminal block with terminals marked P1-P2, S1-S2 to which external connections are to be made. By means of different connections of the primary and secondary windings, a large number of current ratios is obtained. If, however, SLCE 12 is ordered with a specific ratio, it will be delivered connected and marked for this ratio.

The transformer can be obtained as single-phase units or in a three-phase set with three transformers mounted on an apparatus plate for 19" rack mounting. The set includes a terminal block X1, marked 1 to 12, to which external connections are to be made. Internal connections between the terminal block and the primary and secondary terminals of the transformers are made before delivery.

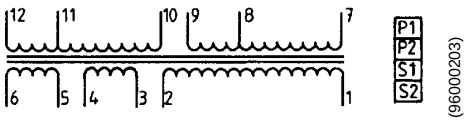

Fig. 4 Terminal markings of separate SLCE 12

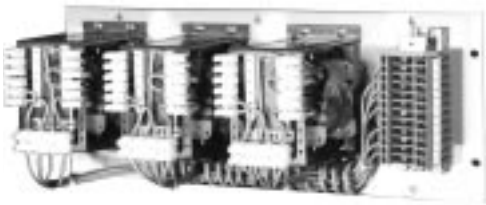

(90142)

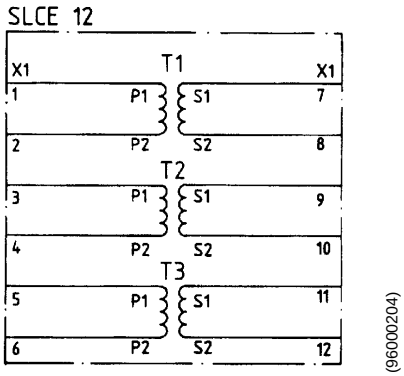

Fig. 5 Terminal markings of the three-phase set with 3 SLCE 12

Technical data

Table 1: Rated and operate values

RADSB		
Rated current, I_r	1 or 5 A	
Rated frequency, f_r	50-60 Hz	
Restrained operate value, I_{sr}	Settable 0,20, 0,25, 0,35 and 0,50 x I_r	
Unrestrained high speed operate value, I_{su}	Settable 8, 13 and 20 x I_r	
Restraining limit values: Energizing Overvoltage External faults	 2:nd harmonic = 17% of the fundamental 5:th harmonic = 38% of the fundamental Acc. to curves in Fig. 3	
Operate time: (see Fig. 2) $I_d = 3 \times I_{sr}$ $I_d = 2 \times I_{su}$	RXMS 1 approx. 30 ms 10-20 ms	RXME 18 approx. 60 ms approx. 40 ms
Overload capacity: continuously 1 s	I_r = 1 A 10 A 100 A	I_r = 5 A 20 A 250 A
Permitted ambient temperature	-25°C to +55°C	
Auxiliary voltage, EL	24-250 V dc +10%, -20%	
Power consumption: Restraint circuit Differential circuit Auxiliary circuit normal service operation	 approx. 0,025 VA/phase at I_r = 1 A approx. 0,25 VA/phase at I_r = 5 A approx. 0,025 VA/phase at I_r = 1 A approx. 0,25 VA/phase at I_r = 5 A approx. 7 W approx. 11 W	
Dimensions and weight	See Ordering, Table 6: RADSB selection	
SLCE 12, standard version		
Rated secondary current, I_r	1 or 5 A	
Current ratios	Reconnectible in 4-6% steps 0,65-2,60/1 A 2,55-10,1/1 A 2,85-11,2/5 A	
Rated frequency, f_r	50-60 Hz	
Rated output	1,5 VA	2,5 VA
Accuracy class	10 P	10 P
Accuracy limit factor	30	20
Remanence factor (max. remaining flux density in multiples of the saturation flux density)	0,2	
Overload capacity: continuously 10 s 1 s	 $2,5 \times I_r$ $15 \times I_r$ $75 \times I_r$	
Power consumption	1,0-2,8 VA depending on selected ratio	
Permitted ambient temperature	-20°C to +55°C	
Max. external conductor area	10 mm^2	
Weight: single-phase unit 3-phase unit	 3,6 kg approx. 12 kg	

Technical data (cont'd)

Table 2: Insulation tests (IEC 255-5)

RADSB	
Dielectric tests current circuits other circuits	 2,5 kV, 50 Hz,1 min 2,0 kV, 50 Hz,1 min
Impulse voltage test	5,0 kV, 1,2/50 µs, 0,5 J
SLCE 12	
Dielectric tests between primary and secondary windings and to exposed conductive parts	 2,5 kV, 50 Hz,1 min

Table 3: Electromagnetic compatibility tests

Power frequency test (SS 436 15 03)	 0,5 kV, class PL4
Fast transient test (SS 436 15 03)	 4-8 kV, class PL 4
1 MHz burst test (IEC 255-22-1)	 2,5 kV, class III
Electrostatic test (IEC 255-22-2) contact discharge air discharge	 6 kV, class III 8 kV, class III
Radiated electromagnetic field test (IEC 1000-4-3)	 10 V/m, 26 - 1000 MHz, class III
Conducted electromagnetic test (IEC 1000-4-6)	 10 V 0,15-80 MHz
Fast transient test (IEC 255-22-4)	 4 kV, class IV
Electromagnetic emission test (EN 55 011)	 0,15-100 MHz, class A

Table 4: Mechanical tests

Vibration tests (IEC 255-21-1) response test endurance test	 0,075 mm/1 g, 10-150 Hz, class II 2 g, 10-150 Hz, 20 sweeps, class II
Shock tests (IEC 255-21-2) response test withstand test	 5 g, 11 ms, 3 pulses, class I 15 g, 11 ms, 3 pulses, class I
Bump test (IEC 255-21-2)	10 g, 16 ms, 1000 pulses, class I

Table 5: Contact data

	RXMS 1	RXME 18	RXSF 1	RXSGA 1 RXTUG 22H
Highest system voltage DC/AC	300/250 V	450/400 V	300/250 V	250/250 V
Current carrying capacity continuously during 1 s	 4 A 20 A	 6 A 30 A	 5 A 50 A	 5 A 15 A
Making and conducting capacity during 0,2 s during 1 s	 30 A 10 A	 30 A 20 A	 30 A 10 A	 30 A 10 A
Breaking capacity ac, cos φ > 0,4, 250 V dc, L/R, < 40 ms 48 V 110 V 220 V	 10 A 1,2 A 0,3 A 0,15 A	 20 A 18 A 3 A 1 A	 10 A 1,5 A 0,4 A 0,2 A	 8 A 1 A 0,4 A 0,2 A

Diagrams

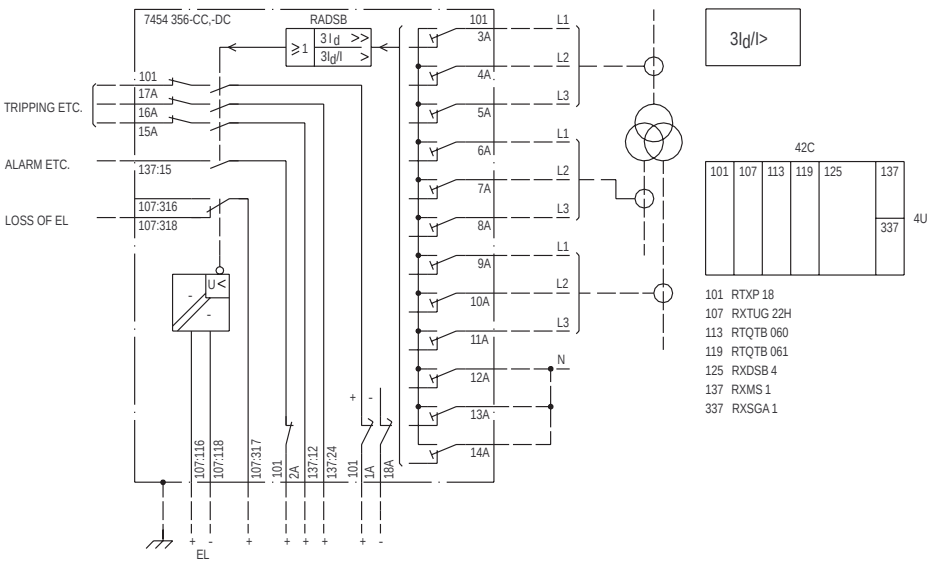

Fig. 6 Variant with 3 restraint inputs and tripping relay type RXMS 1
Terminal diagram No. 7454 356-DBA

Diagrams (cont'd)

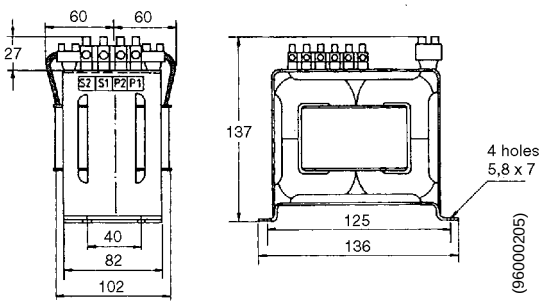

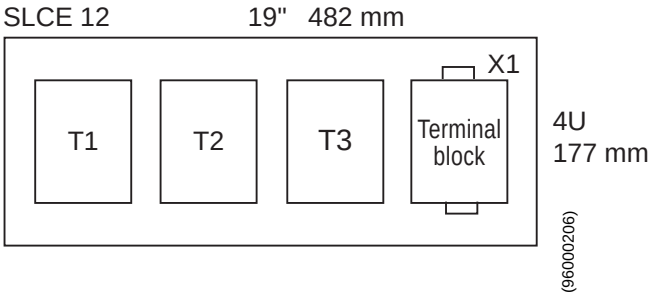

Fig. 7 SLCE 12 and apparatus with 3 SLCE 12. Dimensions in mm

Ordering

Specify:

- Quantity
- Ordering No. (from Table 6: RADSB selection)
- Rated current, I_r
- Rated frequency, f_r
- Options:
- Interposing CT's (see Table 7: Interposing CT selection)
- Three-phase auxiliary CT set mounted on a 4U 19" apparatus plate with terminal block
- Desired wording on the lower half of the test switch face plate max. 13 lines with 14 characters per line.

Type SLCE interposing current transformers:

- Type SLCE 12 or 16
  (alt. three-phase set with 3 SLCE 12)
- Quantity
- Ordering No. (from Table 7: Interposing CT selection)
- Desired ratio connected (factory setting)

Mounting:

- RADSB is delivered on apparatus bars. When additional mounting is required use a 4U equipment frame for 19" rack mounting or a type RHGX 12 or 20 case for panel mounting.

  For installation and connection material see Accessories (COMBIFLEX connection and installation) and Mounting system sections of the catalogue.

Table 6: RADSB selection

No. of restraint inputs	Type of tripping relay	Indicator	Flag relay	Dimensions	Weight	Circuit/ Terminal diagram	Ordering No.
two	RXMS 1	–	–	4U 36C	6 kg	7454 344-AE/ 7454 344-ADA	RK 625 001-AC
two	RXME 18	–	(RXME 18)	4U 36C	6 kg	7454 344-BE/ 7454 344-BDA	RK 625 001-BC
two	RXMS 1	RXSGA 1	–	4U 36C	6 kg	7454 344-CE/ 7454 344-ADA	RK 625 001-CC
two	RXMS 1	–	RXSF 1	4U 36C	6 kg	7454 344-EB/ 7454 344-EAA	RK 625 001-EA
three	RXMS 1	RXSGA 1	–	4U 36C	9 kg	7454 356-CC/ 7454 356-DBA	RK 625 005-CA
three	RXMS 1	–	RXSF 1	4U 36C	9 kg	7454 356-DC/ 7454 356-DBA	RK 625 005-DA
five	RXMS 1	RXSGA 1	–	4U 60C	11 kg	7454 359-CC/ 7454 359-DBA	RK 625 006-CA
five	RXMS 1	–	RXSF 1	4U 60C	11 kg	7454 359-DC/ 7454 359-DBA	RK 625 006-DA
six	RXMS 1	RXSGA 1	–	4U 60C	13 kg	7454 361-CB/ 7454 361-CBA	RK 625 010-CA

Table 7: Interposing CT selection

Ratio	Type	Ordering No. Single-phase units	Ordering No. Three-phase set on plate
Reconnectible standard design:			
0,65-2,60 A/1 A	SLCE 12	4785 040-VP	RK 795 104-AA
2,55-10,1 A/1 A	SLCE 12	4785 040-VR	RK 795 104-AA
2,85-11,2 A/5 A	SLCE 12	4785 040-VS	RK 795 104-AA
With equalizing winding (D-connected). One ratio.			
Please specify the ratio	SLCE 12		RK 795 104-BA
Without equalizing winding. Order specific fixed ratio.			
Please specify the ratio	SLCE 12		RK 795 104-CA
For long CT circuits:			
5/0,4 A	SLCE 16/350	4785 040-ATL	
1/0,4 A	SLCE 16/350	4785 040-AUA	
0,4/1 A	SLCE 12/200	4785 040-AUB	
0,4/5 A	SLCE 12/200	4785 040-AUC	

References

RADSB User's Guide Calculation and connection guide for interposing transformers	1MDU04007-EN
Power transformer protection Application Guide	AG03-5005E
Auxiliary relays RXMS 1, RXME 18 and signal relay RXSF 1	1MRK 508 015-BEN
DC-DC converter RXTUG 22H	1MRK 513 001-BEN
Test system COMBITEST	1MRK 512 001-BEN
COMBIFLEX connection and installation components	1MRK 513 003-BEN
Relay mounting systems	1MRK 514 001-BEN
Dimensions	1MRK 514 004-BEN

Manufacturer

ABB Automation Products AB
Substation Automation Division
SE-721 59 Västerås
Sweden
Tel: +46 (0) 21 34 20 00
Fax: +46 (0) 21 14 69 18