Voltage restraint overcurrent relay and protection assemblies

RXISK 2H and RAISK

1MRK 509 033-BEN
Page 1
Issued: September 2001
Changed since: June 1999
Data subject to change without notice

(SE970171)

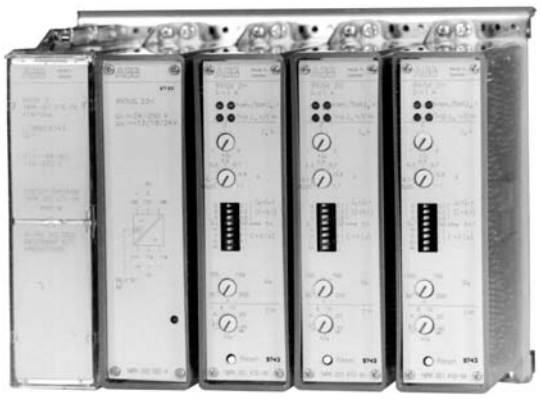

(SE970896)

Features

- Voltage restraint overcurrent stage with five different inverse or definite time characteristics
- One instantaneous high overcurrent stage
- Suitable as phase short-circuit protections for generators and other applications where voltage restraint is an advantage
- Microprocessor design
- Single phase measuring elements
- A compact alternative to voltage controlled overcurrent relays
- Two binary inputs to reset indications and to block the start and trip functions
- Optional test switch

Application

Voltage restrained overcurrent protection provides improved sensitivity of overcurrent relaying by making the set overcurrent operating value proportional to the applied input voltage. Voltage restraint overcurrent relays are often used as an alternative to impedance relays on small to medium (5-150MVA) size generators to provide back-up to the differential relay. Other applications of voltage restrained overcurrent relays exist in networks to provide better coordination and fault detection than plain overcurrent relays. This is especially the case where the fault-current may vary and drop below the normal rated line-current under different fault current source conditions. The operating time can be set to five different inverse curves or definite time delay. When selecting the inverse time delay, the delay time is a function of the applied current and proportional to the applied input voltage within the specified voltage range. This means that the operating delay is shortened by a reduction in voltage as well as an increase in current.

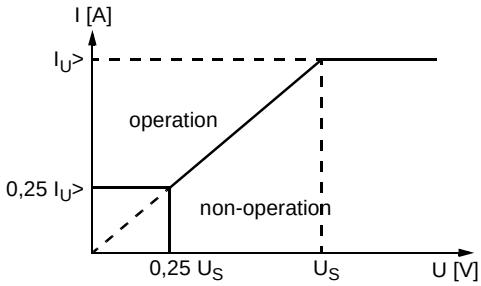

Fig. 1 The overcurrent operating characteristic is proportional to the input voltage within the specified voltage range.

One instantaneous overcurrent element is provided in addition to the inverse or fixed time-delayed element.

Design

The RXISK 2H occupies two vertically orientated seat-modules in the COMBIFLEX plug-in design.

The voltage restraint overcurrent relay RXISK 2H is a protective class II equipment in which protection against electric shock does not rely on basic insulation only. It also provides additional safety precaution, such as double insulation or reinforced insulation.

The RXISK 2H measuring relay is based on two microprocessors having two input transformers to provide suitable measuring signals for the measuring of a single phase current and voltage. The analog inputs are provided with filtering of the input signals prior to the analog to digital conversion needed for the microprocessors. The front of the relay contains the needed setting devices, i.e. potentiometers and setting and selection switches. The relay has four light emitting diodes for indication of in service, start and trip status. The diodes also serve as indicators for the self supervision function. In case of a failure, the 4 LEDs will start to flash. Upon complete failure, the green in service LED will extinguish. During normal operation the green LED will be lit to indicate proper in service condition.

Wiring is performed to the terminal base holding the unit, using COMBIFLEX sockets crimped onto the connection leads. Maximum 1.5 mm^2 lead area is used for AC voltage and DC and 2.5 mm^2 for AC current. See 1MRK 513 003-BEN for installation details.

The RAISK is the completely assembled protection. The assembly is available with or without test switch.

The needed DC comes from a DC/DC converter power supply type RXTUG 22H, ensuring that all requirements concerning EMC, immunity and emission are met. An output supervisory auxiliary relay having one change-over contact is provided on the dc/dc converter to indicate healthy operating conditions and dc failure. I.e the auxiliary relay drops out to provide an alarm signal upon loss of dc. See 1MRK 513 001-BEN.

Technical data

Table 1: Voltage and current input

Rated voltage U_r	120 V
Rated current I_r	1 A or 5 A
Scale constant I_s	0,1, 0,20, 0,4 and 1,0 A 0,5, 1,0, 2,0 and 5,0 A
Effective voltage range	0-300 V
Effective current range	(0,25-60) x I_s
Rated frequency f_r Operating frequency range	50-60 Hz 45-66 Hz
Power consumption for: $U = U_r$ =120 V 1 A variantI = I_s = 0,1 A I = I_s = 1 A 5 A variantI = I_s = 0,5 A I = I_s = 5 A	 0,25 VA 0,5 mVA 50 mVA 1,5 mVA 100 mVA
Overload capacity voltage: continuously during 10 s Overload capacity current: 1 A variantcontinuously 5 A variantcontinuously 1 A variantduring 1 s 5 A variantduring 1 s	 250 V 300 V 4 A 20 A 100 A 350 A

Table 2: Voltage restraint overcurrent function

Function	Stage I_U>
Setting range I_U>	(1,0-3,0) x I_S
Setting range U_S	50-200 V
Voltage restraint characteristic	See Fig. 2
Operate time, typical	50 ms
Reset time, typical	60 ms
Reset ratio, typical	90%
Transient over-reach L/R = 10, 50 and 100 ms	< 3%
Overshoot time	< 35 ms
Recovery time	< 60 ms
Frequency dependence 45-65 Hz	< ± 5%
Influence of harmonics in: U100/120 Hz, 20% 150/180 Hz, 20% 250/300 Hz, 20% I100/120 Hz, 20% 150/180 Hz, 20% 250/300 Hz, 20%	 < 4% < 8% < 2% < 6% < 8% < 3%

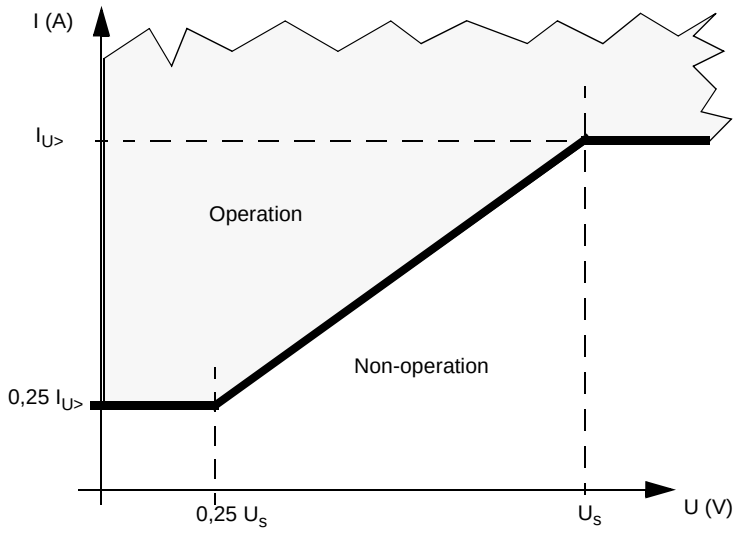

Fig. 2 Operating characteristic for voltage restraint overcurrent function

Technical data (cont'd)

Table 3: Overcurrent function

Function	Stage I>>
Setting range	(1,0 - 40) x I_S and ∞
Operate time, typical I = 0 => 3 x I>> I = 0 => 20 x I>>	 35 ms 25 ms
Reset time, typical I = 3 => 0 x I>> I = 20 => 0 x I>>	 50 ms 65 ms
Consistency of operate value	< 2%
Reset ratio	> 90%
Transient over-reach, L/R = 10, 50 and 100 ms	< 3%
Overshoot time	< 25 ms
Frequency dependence 45 - 65 Hz	< ±5%
Influence of harmonics in: 100 / 120 Hz, 20% 150 / 180 Hz, 20% 250 / 300 Hz, 20%	 < 3% < 6% < 3%

Table 4: Time function

Time function		I_U >			
Time delay		Inverse and definite time (Normal, Very, Extremely, Long time and RI inverse time)			
Setting range	Definite time Inverse time	0,05-8,1 s k = 0,05-1,1			
		The tolerances for inverse and definite time delay are calculated under the condition that the current before operation was 0 x I_S.			
Accuracy	Definite time	1% and ±50 ms			
	Inverse time	NI, VI, EI and LI	2	x op. value	12,5% and ±30 ms
		NI, VI, EI and LI	5	x op. value	7,5% and ±30 ms
		NI, VI, EI and LI	10	x op. value	5% and ±30 ms
		NI, VI and LI	20	x op. value	5% and ±30 ms
		EI	20	x op. value	5% and +80 -30 ms
		RI	1,0	x op. value 1	2,5% and ±30 ms
			1,3	x op. value 1	2,5% and ±30 ms
			1,5	x op. value	5% and ±30 ms
			10	x op. value	5% and ±30 ms
			20	x op. value	5% and ±30 ms
Consistency		< 0,5%			

Table 5: Auxiliary DC voltage supply

Auxiliary voltage EL for RXTUG 22H Auxiliary voltage to the relay			24-250 V DC, ±20% ±24 V (from RXTUG 22H)
Power consumption at RXTUG 22H input	24-250 V,	before operation after operation	Max. 3,5 W Max. 4,5 W
without RXTUG 22H	±24 V,	before operation after operation	Max. 1,5 W Max. 2,5 W

Table 6: Binary inputs

Binary input voltage RL	48-60 V and 110-220 V DC, -20% to +10%
Power consumption 48-60 V 110-220 V	 Max. 0,3 W Max. 1,5 W

Table 7: Output relays

Contacts	3 change-over
Maximum system voltage	250 V AC / DC
Current carrying capacity continuous during 1 s	 5 A 15 A
Making capacity at inductive load with L/R >10 ms during 200 ms during 1 s	 30 A 10 A
Breaking capacity AC, max. 250 V, cos φ > 0,4 DC, with L/R < 40 ms,48 V 110 V 220 V 250 V	 8 A 1 A 0,4 A 0,2 A 0,15 A

Table 8: Electromagnetic compatibility (EMC), immunity tests
All tests are performed together with the DC/DC-converter, RXTUG 22H

Test	Severity	Standard
Surge	1 and 2 kV, normal service 2 and 4 kV, destructive test	IEC 61000-4-5, class 3 IEC 61000-4-5, class 4
AC injection	500 V, AC	SS 436 15 03, PL 4
Power frequency field immunity	1000 A/m	IEC 61000-4-8
1 MHz burst	2,5 kV	IEC 60255-22-1, class 3
Spark	4-8 kV	SS 436 15 03, PL 4
Fast transient	4 kV	IEC 60255-22-4, class 4
Electrostatic discharge In normal service with cover on	 8 kV (contact) 15 kV (air) 8 kV, indirect application	 IEC 60255-22-2, class 4 IEC 60255-22-2, class 4 IEC 61000-4-2, class 4
Radiated electromagnetic field	10 V/m, 26-1000 MHz	IEC 61000-4-3, Level 3
Conducted electromagnetic	10 V, 0,15-80 MHz	IEC 61000-4-6, Level 3
Interruptions in auxiliary voltage 110 VDC, no resetting for interruptions	2-200 ms < 100 ms	IEC 60255-11

Table 9: Electromagnetic compatibility (EMC), emission tests

Test	Severity	Standard
Conducted	0,15-30 MHz, class A	EN 50081- 2
Radiated	30-1000 MHz, class A	EN 50081- 2

Technical data (cont'd)

Table 10: CE-demand

Test	Reference standard
Immunity	EN 50082-2
Emission	EN 50081-2
Low voltage directive	EN 50178

Table 11: Insulation tests

Test	Severity	Standard
Dielectric current circuit other circuits over open contact	 2,5 kV AC, 1 min 2,0 kV AC, 1 min 1,0 kV AC, 1 min	IEC 60255-5
Impulse voltage	5 kV, 1,2/50 µs, 0,5 J	IEC 60255-5
Insulation resistance	> 100 MΩ at 500 V DC	IEC 60255-5

Table 12: Mechanical tests

Test	Severity	Standard
Vibration	Response: 2,0 g, 10-150-10 Hz Endurance: 1,0 g, 10-150-10 Hz, 20 sweeps	IEC 60255-21-1, class 2 IEC 60255-21-1, class 1
Shock	Response: 5 g, 11 ms, 3 pulses Withstand: 15 g, 11 ms, 3 pulses	IEC 60255-21-2, class 1
Bump	Withstand: 10 g, 16 ms, 1000 pulses	IEC 60255-21-2, class 1
Seismic	X axis: 3,0 g, 1-35-1 Hz Y axis: 3,0 g, 1-35-1 Hz Z axis: 2,0 g, 1-35-1 Hz	IEC 60255-21-3, class 2, extended (Method A)

Table 13: Climatic conditions

Climatic condition	Partially weather protected locations, switchgear environment, class 3K3
Storage	-20 °C to +70 °C
Permitted ambient temperature	-5 °C to +55 °C

Table 14: Weight and dimensions

Equipment	Weight	Height	Width
RXISK 2H without RXTUG 22H	0,7 kg	4U	6C

Diagrams

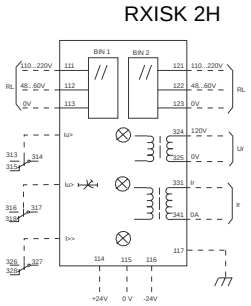

Fig. 3 Terminal diagram RXISK 2H

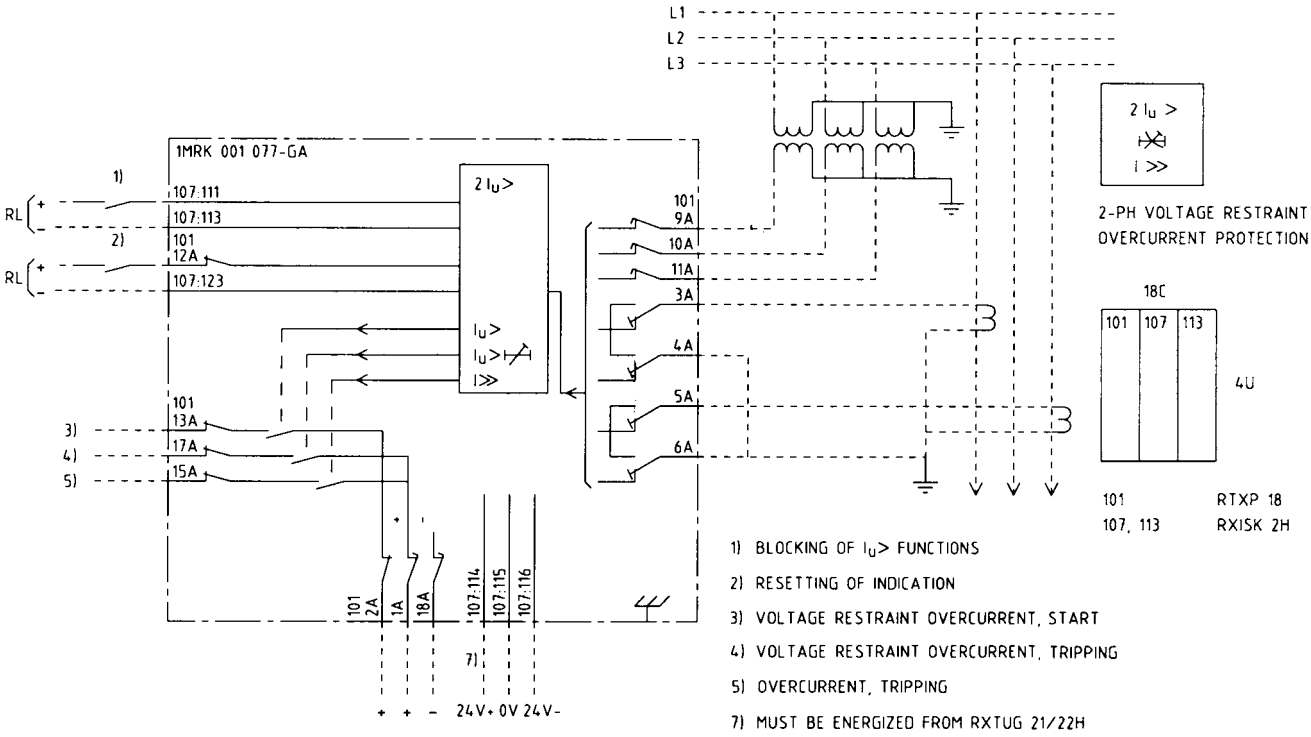

Fig. 4 Terminal diagram 1MRK 001 077-GAA

Diagrams (cont'd)

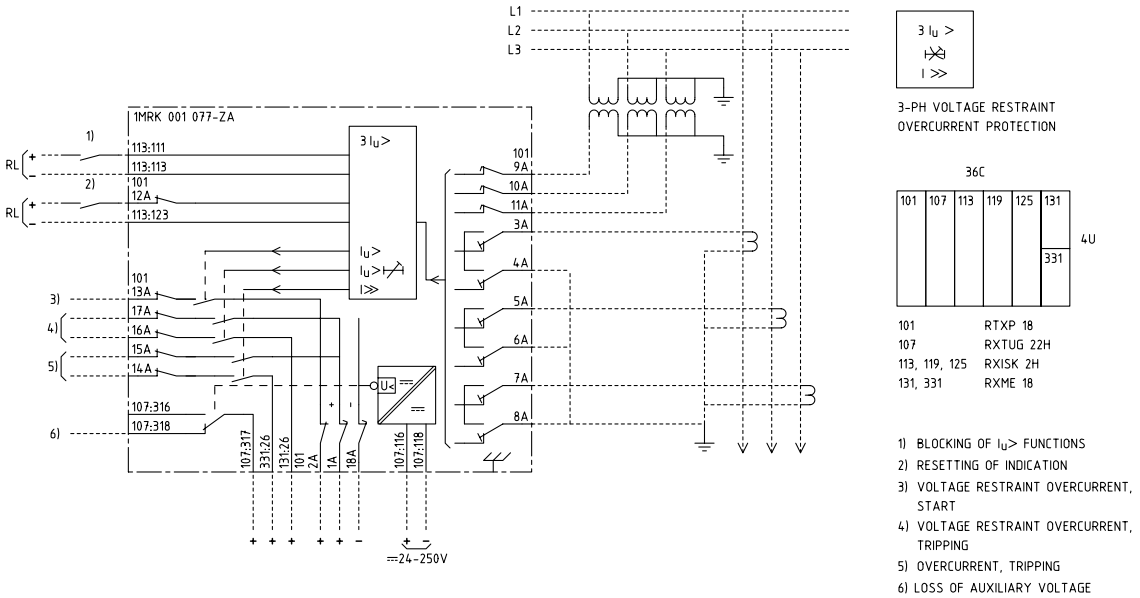

Fig. 5 Terminal diagram 1MRK 001 077-ZAA

Protection assemblies

RAISK

The protection assemblies are of protective class I equipment in which protection against electric shock does not rely on basic insulation only. It includes additional safety precautions in such way that accessible conductive parts are connected to protective earth.

Protection assemblies are built up based upon voltage restraint overcurrent relay RXISK 2H. Test device RXTP 18 and DC/DC converter RXTUG 22H can also be included for specific application requirements. Test device RTXP 18 is a tool for relay testing.

DC/DC-converter RXTUG 22H can be used either separately for a single protection or to feed also other protections with up to 9 units of the same relay family. With RXTUG 22H all requirements concerning disturbance emission and immunity with this protection assembly will be met.

The assemblies have output contacts as specified for the relay RXISK 2H, which in most cases are fully sufficient. Protections are normally available with output logic with heavy duty relay RXME 18 (RK 221 825-XX) with indicating flag and can upon request be completed with an output logic of free choice. Output relays are connected to separate auxiliary voltage.

The extremely flexible mounting system COMBIFLEX together with a modern CAD-system enables us to present a unique flexibility for designing assemblies upon the customers requests.

The interface voltage for enable or block impulses can be connected to either 48-60 V DC or 110-220 V DC by connecting the voltage circuit to separate terminals. At delivery all relays are connected for 110-220 V DC.

RAISK 2 Two-phase voltage restraint overcurrent protection

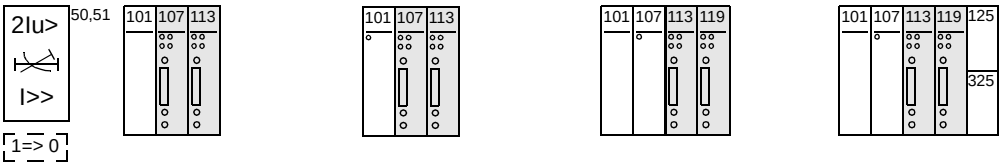

101 RTXP 18	101 RXTUG 22H	101 RTXP 18	101 RTXP 18
107 RXISK 2H	107 RXISK 2H	107 RXTUG 22H	107 RXTUG 22H
113 RXISK 2H	113 RXISK 2H	113 RXISK 2H	113 RXISK 2H
		119 RXISK 2H	119 RXISK 2H
			125 RXME 18
			325 RXME 18
Order No. / Circuit diagram	Order No. / Circuit diagram	Order No. / Circuit diagram	Order No. / Circuit diagram
1MRK 001 076-GA / 1MRK 001 077-GA	1MRK 001 076-HA / 1MRK 001 077-HA	1MRK 001 076-KA / 1MRK 001 077-KA	1MRK 001 076-LA / 1MRK 001 077-LA

RAISK 3 Three-phase voltage restraint overcurrent protection

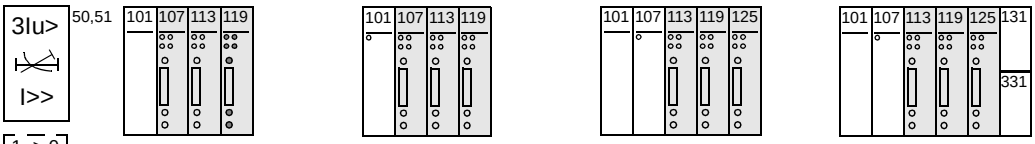

	101 RTXP 18		101 RXTUG 22H		101 RTXP 18		101 RTXP 18	
	107 RXISK 2H		107 RXISK 2H		107 RXTUG 22H		107 RXTUG 22H	
	113 RXISK 2H		113 RXISK 2H		113 RXISK 2H		113 RXISK 2H	
	119 RXISK 2H		119 RXISK 2H		119 RXISK 2H		119 RXISK 2H	
					125 RXISK 2H		125 RXISK 2H	
							131 RXME 18	
							331 RXME 18	
	Order No.	Circuit diagram	Order No.	Circuit diagram	Order No.	Circuit diagram	Order No.	Circuit diagram
3 Ph	1MRK 001 076-NA	1MRK 001 077-NA	1MRK 001 076-YA	1MRK 001 077-YA	1MRK 001 076-PA	1MRK 001 077-PA	1MRK 001 076-ZA	1MRK 001 077-ZA

Mounting alternatives

All assemblies can be delivered in the following mounting alternatives:

- on apparatus bar
- in equipment frame 60C
- in RHGS
- in RHGX

Ordering

Specify RAISK Protections

- Quantity
- Ordering number
- Code A, H, M
- Desired wording on the lower half of the test switch face plate max. 13 lines with 14 characters per line.

Specify RXISK (loose relays)

- Quantity
- Ordering number

Overcurrent relay

Type	Rated current Ir	Filter	Article No.	Code for phase
RXISK 2H	1 A	50-60 Hz (standard)	1MRK 001 410-AA	☐ A1
RXISK 2H	5 A	50-60 Hz (standard)	1MRK 001 410-BA	☐ A2

Auxiliary voltage

For included auxiliary relays

	Code
24 V dc	☐ H5
48-55 V dc	☐ H6
110-125 V dc	☐ H7
220-250 V dc	☐ H8

Mounting

Mounting alternatives	Size	Article No.	Code
Apparatus bars			☐ M10
Equipment frame without door	4U 19”	1MRK 000 137-GA	☐ M11
Equipment frame with door	4U 19”	1MRK 000 137-KA	☐ M12
RHGX 4	4U 12C	RK 927 001-AB	☐ M71
RHGX 8	4U 24C	RK 927 002-AB	☐ M72
RHGX 12	4U 36C	RK 927 003-AB	☐ M73
RHGX 20	4U 60C	RK 927 004-AB	☐ M74
RHGS 30	6U x 1/1 19” rack	1MRK 000 315-A	☐ M81
RHGS 12	6U x 1/2 19” rack	1MRK 000 315-B	☐ M82
RHGS 6	6U x 1/4 19” rack	1MRK 000 315-C	☐ M83

References

COMBIFLEX Generator Protection - Application Guide	1MRK 502 003-AEN
COMBIFLEX Installation and connection details	1MRK 513 003-BEN
COMBIFLEX accessories	1MRK 513 004-BEN
COMBIFLEX dimensions	1MRK 514 004-BEN
COMBITEST	1MRK 512 001-BEN

Manufacturer

ABB Automation Technology Products AB
Instrumentation & Control
Substation Automation
SE-721 59 Västerås
Sweden
Tel: +46 (0) 21 34 20 00
Fax: +46 (0) 21 14 69 18