Auxiliary current transformer, 1 or 5 A for RADSB

SLCE 12

1MRK 513 008-BEN
Page 1
Issued June 1999
Changed since July 1998
Replaces B03-9280
Data subject to change without notice

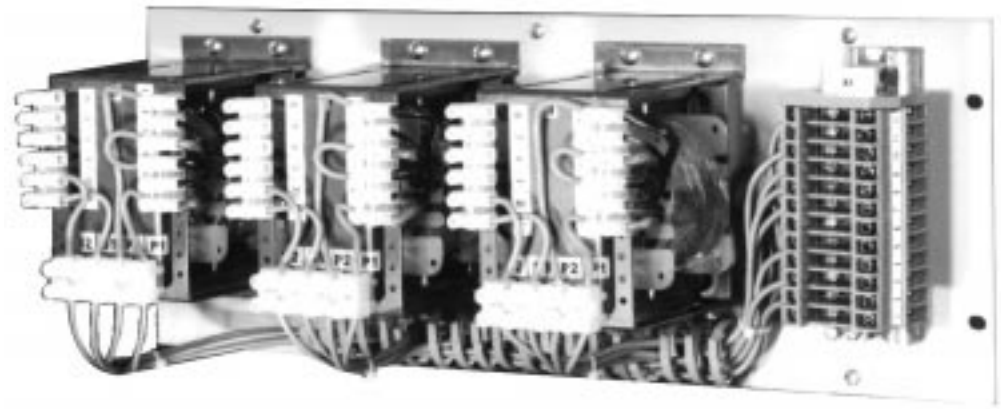

90142

Features

- Secondary current 1 A or 5 A
- Three different ratios, reconnectable in steps of 4 to 6%:
  - 0.65-2.60/1 A
  - 2.55-10.1/1 A
  - 2.85-11.1/5 A
- Fixed ratio with or without equalising winding available on request
- Available separate or in three-phase sets

Application

The SLCE 12 is mainly used as auxiliary current transformer for transformer differential relays type RADSB.

SLCE 12 can also be used for other applications where matching or electrical isolation is required.

Design

The reconnectable SLCE 12 has three secondary windings connected to a terminal block with six terminals marked 1 through 6 and two primary windings with intermediate taps connected to a terminal block with six terminals marked 7 through 12. The transformer also has a third terminal block with terminals marked P1-P2, S1-S2 to which external connections are to be made. By means of different connections of the primary and secondary windings, a large number of current ratios is obtained. However, if SLCE 12 is ordered with a specific ratio, it will be delivered connected and marked for this ratio.

The transformer can be obtained separate or in a three-phase set with three transformers mounted on an apparatus plate for 19" rack mounting. The set includes a terminal block marked 1 through 12, to which external connections are to be made. Internal connections between the terminal block and the primary and secondary terminals of the transformers are made before delivery.

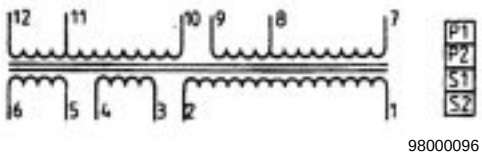

Fig. 1 Terminal markings of separate SLCE 12

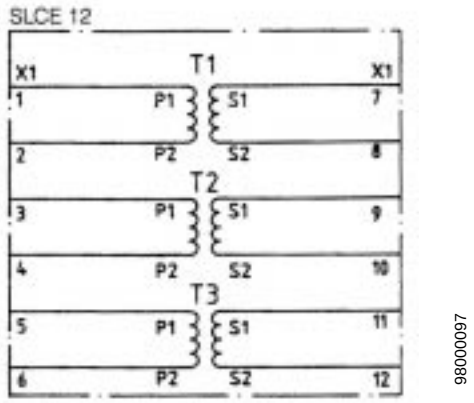

Fig. 2 Terminal markings of three-phase set with three SLCE 12

Technical data

Rated secondary current I_n	1 A or 5 A
Current ratios	Reconnectable in 4-6% steps. Available standard versions: 0.65-2.60/1 A 2.55-10.1/1 A 2.85-11.1/5 A
Rated frequency	50-60 Hz
Rated output	2.5 VA
Accuracy class Saturation factor	10 P 20
Remanence factor (max. remaining flux density in multiples of the saturation flux density)	0.2
Overload capacity: Withstands; Continuously For 10 seconds For 1 second	 2.5 x I_n 15 x I_n 75 x I_n
Power consumption	1.0-2.8 VA depending on connection
Dielectric test voltage: Between primary and secondary windings Between windings and ground	 2.5 kV, 50 Hz, 1 min 2.5 kV, 50 Hz, 1 min
Permitted ambient temperature	-20 to +55 °C
Max. external conductor area	10 mm^2
Mass	3.6 kg

Ordering

Standard version, reconnectable
Specify:

- Type SLCE 12 (alt. three-phase set with three SLCE 12)
- Quantity
- Ordering no. (for three-phase sets, state RK 795 104-AA and ordering no. for each SLCE 12 included)
- Desired ratio connected

Ordering table, standard versions

Current ratio, A	Ordering no.
0.65-2.60/1 A	4785 040-VP
2.55-10.1/1 A	4785 040-VR
2.85-11.2/5 A	4785 040-VS
Three-phase set with three SLCE 12	RK 795 104-AA

Special version, fixed ratio
Specify:

- Type SLCE 12 (alt. three-phase set with three SLCE 12)
- Quantity
- Special version (fixed ratio)
- For three-phase sets, state:
  - RK 795 104-BA for version with equalising winding
  - RK 795 104-CA for version without equalising winding
- Desired ratio

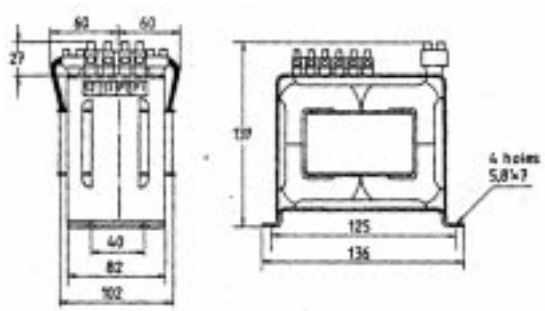

98000098

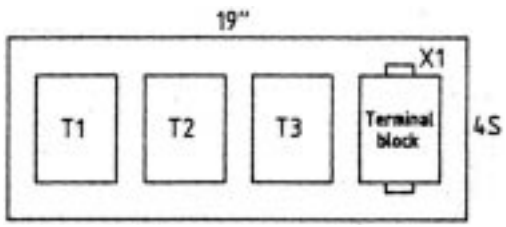

98000099

Fig. 3 SLCE 12 and apparatus plate with three SLCE 12. Dimensions in mm.

References

Detailed description of SLCE 12	RK 625-301E
Calculation and connection guide for auxiliary transformers for RADSB	UG 03-5012E
RADSB	1MRK 504 002-BEN

Manufacturer

ABB Automation Products AB
Substation Automation Division
SE-721 59 Västerås
Sweden
Tel: +46 (0) 21 34 20 00
Fax: +46 (0) 21 14 69 18