Multi-purpose percentage restraint differential protection

RADSC

1MRK 509 016-BEN
Page 1
Issued June 2002
Changed since June 1999
Data subject to change without notice

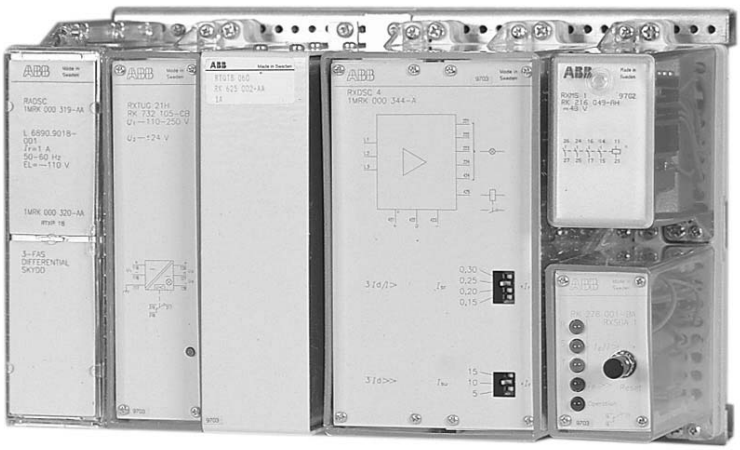

(SE970169)

Features

- Complete phase and earth fault protection for generators, motors, reactors, cables or short lines, capacitor banks and busbars
- A high voltage cable or line, length up to about 2 km, can be included in the protected section
- Compact design
- Percentage restraint for external fault security, 20-75% slope above rated current
- Sensitivity can be set to 15, 20, 25 or 30% of rated current, 1 A or 5 A
- Unrestrained operation settable to 5, 10 or 15 times relay rated current
- Restrained operate time 20 ms at 3 times pick-up current
- Unrestrained operate time 15 ms at 3 times pick-up current with minimum impulse time of 3 ms
- Separate interposing CT's may be used for ratio matching purposes
- Built-in 6 contact trip relay, phase indicator and test switch
- Long CT secondary leads are feasible with 1 A relay
- DC/DC converter with built-in loss-of-voltage alarm contact

Application

The RADSC is a low impedance differential protection intended for all types of applications where a fast percentage restraint function is desired. Typical applications include generators, large motors, cables and short lines, shunt and series reactors. The relay is insensitive to the DC component. By including additional input restraint modules, up to 6 inputs can be connected.

The percentage restraint characteristic provides the required restraint for external faults. This makes the relay suitable also for use with multi-CT inputs, e.g., simple busbar applications, with up to 6 circuits. The characteristics are designed to provide excellent internal fault sensitivity.

The RADSC relay also has an unrestrained instantaneous function which responds to the total differential current (less any dc component). This will provide redundant operation for severe internal faults.

Application (cont'd)

Interposing CT's are used to balance the main CT ratios when necessary. In addition, interposing CT's may be used to reduce the effective lead burden of long secondary leads. The differential zone of the relay can include up to about two kilometers of high voltage cable, since adequate filtering provides security against high current oscillations. In such a case, the current in the CT circuit is reduced by specific interposing CTs.

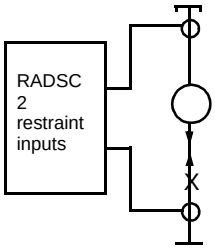

Fig. 1 Application example for the RADSC as generator differential relay

Design

The RADSC relay is available with two, three, five or six through-fault restraint inputs. The relay is built up of the following modules:

- Test switch, type RTXP 18
- DC/DC converter, type RXTUG 22H
- Transformer units, type RTQTB 060 and 061
- Measuring unit, type RXDSC 4
- Tripping relay, type RXMS 1
- Indicator, type RXSGA 1

The RXSGA 1 indicator LED's indicate unrestrained operation and restrained operation and also the phase which caused restraint operation.

The RADSC relay can be connected directly to the main current transformers; however, when this is not practical, interposing CT's are used for the ratio matching purposes. Interposing CT'S provide an additional point of insulation so that different sets of main CT's can be earthed independently of each other. In the case of long CT leads, interposing current transformers can be used to reduce the secondary CT lead burden to the relay in which case the use of 1 A relays is advantageous.

For long CT leads, an additional current reduction may be achieved to reduce lead burden by using auxiliary CT's to step down current to 0,4 A. See table.

When internal faults such as short-circuits between phases or earth faults occur, the differential relay rapidly initiates tripping. On the other hand, the RADSC is stable for differential currents which are caused by external faults. The operate values for restrained and unrestrained operation are set with switches on the measuring unit. The operate times of the relay are shown in Fig. 2.

The through current restraint characteristic is shown in Fig. 3.

The restraint current is $\frac{I_x + I_y}{2}$, where I_x and I_y are the largest currents in to and out from the protected section respectively.

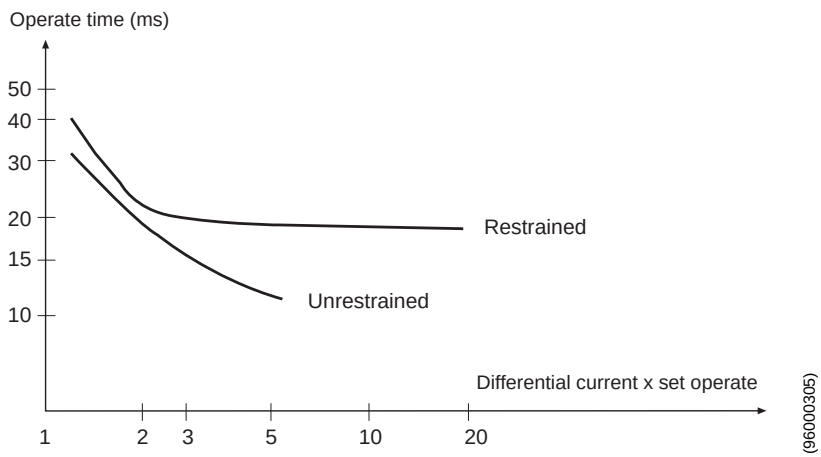

Fig. 2 Operate times for restrained and unrestrained operation

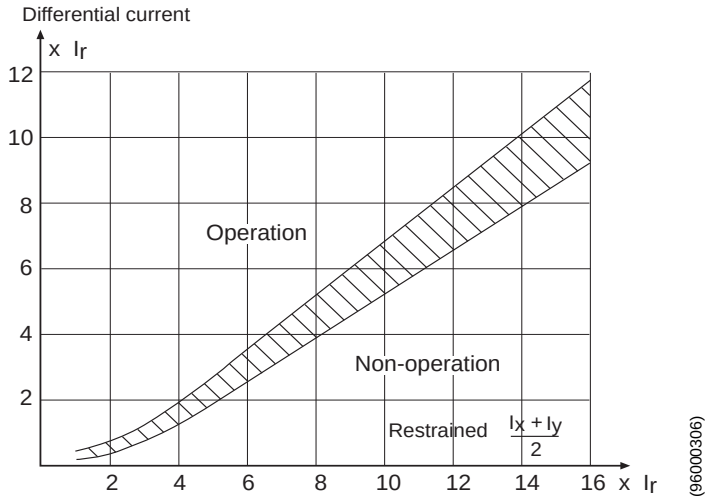

Fig. 3 Through current restraint characteristic

Type SLCE interposing current transformers:

The reconnectible SLCE 12 has three secondary windings connected to a terminal block with sex terminals, marked 1 to 6 and two primary windings with intermediate taps connected to a terminal block with six terminals, marked 7 to 12. The transformer also has a third terminal block with terminals marked P1-P2, S1-S2 to which external connections are to be made. By means of different connections of the primary and secondary windings, a large number of current ratios is obtained. If, however, SLCE 12 is ordered with a specific ratio, it will be delivered connected and marked for this ratio.

The transformer can be obtained as single-phase units or in a three-phase set with three transformers mounted on an apparatus plate for 19" rack mounting. The set includes a terminal block X1, marked 1 to 12, to which external connections are to be made.

Internal connections between the terminal block and the primary and secondary terminals of the transformers are made before delivery.

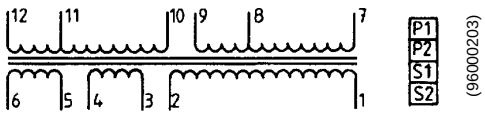

Fig. 4 Terminal markings of separate SLCE 12

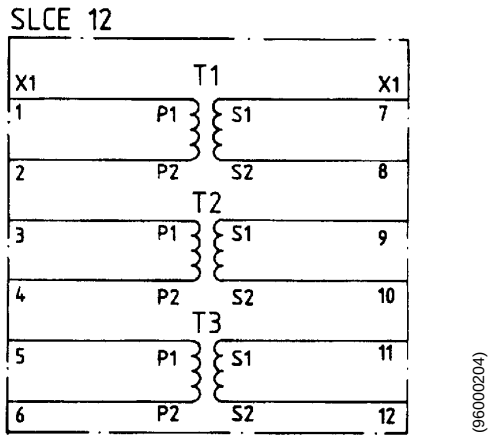

Fig. 5 Terminal markings of three-phase set with 3 SLCE 12Technical data

Technical data

Table 1: Energising quantities, rated values and limits

RADSC		
Rated current, I_r	1 or 5 A	
Rated frequency, f_r	50 and 60 Hz	
Restrained operate value, I_{sr}	Settable 0,15, 0,20, 0,25 and 0,3 times I_r	
Unrestrained high speed operate value, I_{su}	Settable 5, 10 and 15 times I_r	
Resetting ratios	> 85%	
Operate time: at $I_d = 3 \times I_{sr}$ at $I_d = 3 \times I_{su}$	 approx. 20 ms approx. 15 ms	
Minimum impulse time	3 ms at $I_d = 3 \cdot I_{su}$	
Resetting time	< 50 ms	
Overload capacity: continuously for 1 s	I_r = 1 A 10 A 100 A	I_r = 5 A 20 A 250 A
Permitted ambient temperature	-25°C to +55°C	
Auxiliary voltage, EL	24-250 V dc +10%, -20%	
Power consumption: Restraint circuitry I_r = 1 A I_r = 5 A Differential circuitry I_r = 1 A I_r = 5 A Auxiliary voltage circuitry normal service operation	 approx. 0,03 VA/phase approx. 0,3 VA/phase approx. 0,03 VA/phase approx. 0,3 VA/phase approx. 7 W approx. 11 W	

Table 2: Insulation tests (IEC 255-5)

Dielectric tests current circuits other circuits	 50 Hz, 2,5 kV, 1 min 50 Hz, 2,0 kV, 1 min
Impulse voltage test	1,2/50 µs, 5,0 kV, 0,5 J

Table 3: Electromagnetic compatibility tests

Power frequency test	(SS 436 15 03)	0,5 kV, class PL4
Fast transient test	(SS 436 15 03)	4-8 kV, class PL 4
1 MHz burst test	(IEC 255-22-1)	2,5 kV, class III
Electrostatic test contact discharge air discharge	(IEC 255-22-2)	 6 kV, class III 8 kV, class III
Radiated electromagnetic field test	(IEC 1000-4-3)	10 V/m, 26 - 1000 MHz, class III
Conducted electromagnetic test	(IEC 1000-4-6)	10 V 0,15-80 MHz
Fast transient test	(IEC 255-22-4)	4 kV, class IV
Electromagnetic emission test	(EN 55 011)	0,15-100 MHz, class A

Table 4: Mechanical tests

Vibration test Response test Endurance test	(IEC 255-21-1)	 0,035/0,5 g, 10-150 Hz, class I 1 g, 10-150 HZ, 20 sweeps, class I
Shock tests Response test Withstand test	(IEC 255-21-2)	 5 g, 11 ms, 3 pulses, class I 15 g, 11 ms, 3 pulses, class I
Bump test	(IEC 255-21-2)	10 g, 16 ms, 1000 pulses, class I

Table 5: Contact data

Contact data for RXMS 1, RXSGA 1 and RXTUG 22H: see 1MRK 504 002-BEN

Table 6: Type SLCE 12 reconnectible interposing current transformers

Rated secondary current, I_r	1 A or 5 A
Current ratios	Reconnectible in 4-6% steps. Available standard versions: 0,65-2,60/1 A 2,55-10,1/1 A 2,85-11,2/5 A
Rated frequency, f_r	50-60 Hz
Rated output	1,5 VA
Accuracy class Accuracy limit factor	10 P 30
Remanence factor (max. remaining flux density in multiples of the saturation flux density)	0,2
Dielectric tests: between primary and secondary windings between these windings and earth	 50 Hz, 2,5 kV, 1 min 50 Hz, 2,5 kV, 1 min
Overload capacity: continuously for 10 s for 1 s	 2,5 x I_r 15 x I_r 75 x I_r
Power consumption	1,0-2,8 VA depending on connection
Permitted ambient temperature	-20 °C to +55 °C
Max. external conductor area	10 mm^2
Weight	3,6 kg

Diagrams

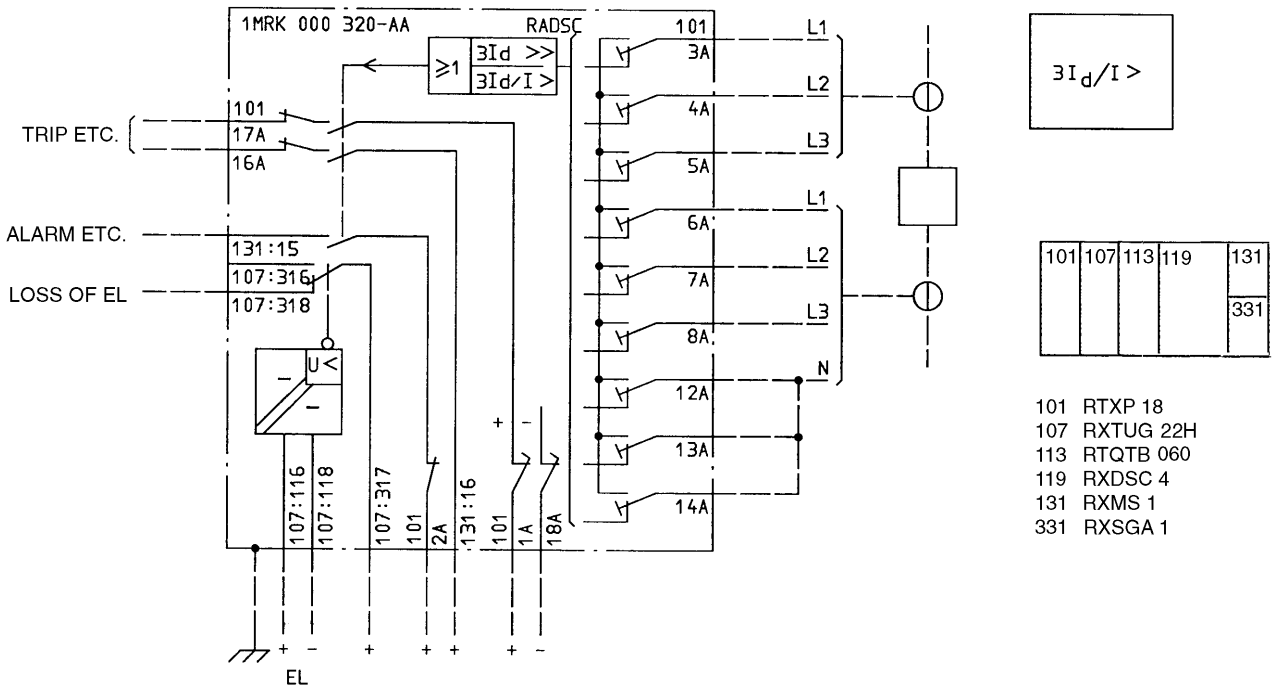

Fig. 6 Variant with two input circuit restraints. Terminal diagram No. 1MRK 000 320-AAA

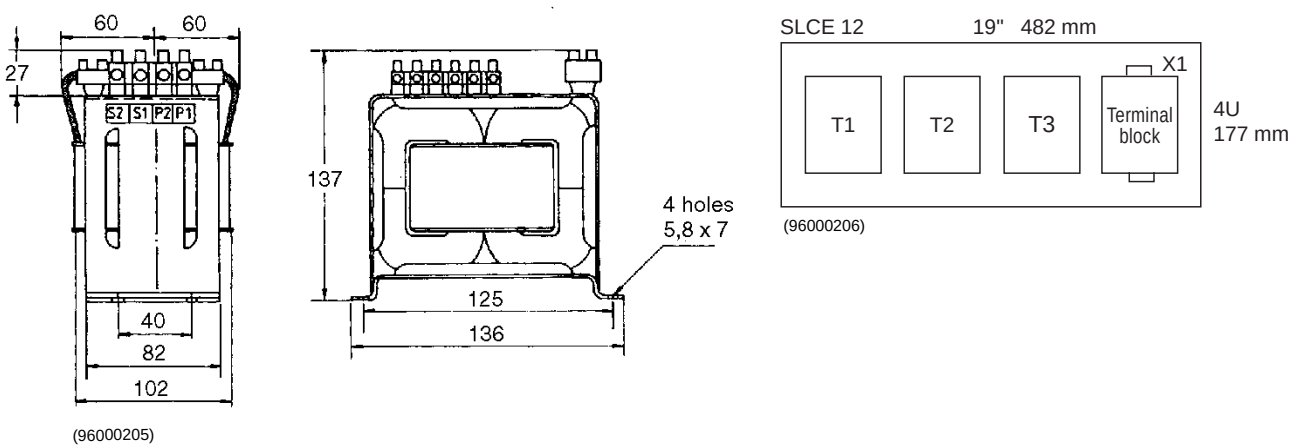

Fig. 7 SLCE 12 and apparatus plate with 3 SLCE 12. Dimensions in mm

Ordering

Differential protection

Specify:

- Quantity
- Ordering No. (from table 7)
- Rated current, I_r
- Desired wording on the lower half of the test switch face plate max. 13 lines with 14 characters per line.

Type SLCE interposing current transformers

- Type SLCE 12 or 16 (alt. three-phase set with 3 SLCE 12) mounted on a 4U 19” apparatus plate with terminal block
- Quantity
- Ordering No. (from table 8)
- Desired ratio connected (factory setting)

Mounting

- RADSC is delivered on apparatus bars. When additional mounting is required use a 4U equipment frame for 19” rack mounting or a type RHGX or RHGS case for panel mounting.
- For installation and connection material see Accessories (COMBIFLEX connection and installation) and Mounting system sections of the catalogue.

Table 7: RADSC selection

No. of restraint inputs	Type of tripping relay	Indicator	Dimensions	Weight	Ordering No.	Circuit/Terminal diagram
two	RXMS 1	RXSGA 1	4U 36C	6 kg	1MRK 000 319-AA	1MRK 000 320-AA/AAA
three	RXMS 1	RXSGA 1	4U 42C	9 kg	1MRK 000 319-BA	1MRK 000 320-BA/BAA
five	RXMS 1	RXSGA 1	4U 60C	11 kg	1MRK 000 319-CA	1MRK 000 320-CA/CAA
six	RXMS 1	RXSGA 1	4U 60C	13 kg	1MRK 000 319-DA	1MRK 000 320-DA/DAA

Table 8: Interposing CT selection

Ratio	Type	Ordering No. Single-phase units	Ordering No. Three-phase set on plate
Reconnectible standard design:			
0,65-2,60 A/1 A	SLCE 12	4785 040-VP	RK 795 104-AA
2,55-10,1 A/1 A	SLCE 12	4785 040-VR	RK 795 104-AA
2,85-11,2 A/5 A	SLCE 12	4785 040-VS	RK 795 104-AA
Fixed ratio, please specify	SLCE 12		RK 795 104-CA
For long CT circuits:			
5/0,4 A	SLCE 16/350	4785 040-ATL	
1/0,4 A	SLCE 16/350	4785 040-AUA	
0,4/1 A	SLCE 12/200	4785 040-AUB	

References

RADSC User's Guide	1MDU09023-EN
Calculation and connection guide for interposing transformers	1MDU04007-EN
Transformer differential protection RADSB	1MRK 504 002-BEN
Auxiliary relay RXMS 1	1MRK 508 015-BEN
Test system COMBITEST	1MRK 512 001-BEN
DC-DC converter RXTUG 22H	1MRK 513 001-BEN
COMBIFLEX connection and installation components	1MRK 513 003-BEN
Relay mounting systems	1MRK 514 001-BEN
Dimensions	1MRK 514 004-BEN

Manufacturer

ABB Automation Technology Products AB
Control & Force Measurement
Substation Automation
SE-721 59 Västerås
Sweden
Tel: +46 (0) 21 34 20 00
Fax: +46 (0) 21 14 69 18