Station Automation

COMBIFLEX®
Generator Protection Terminal
RAGCX

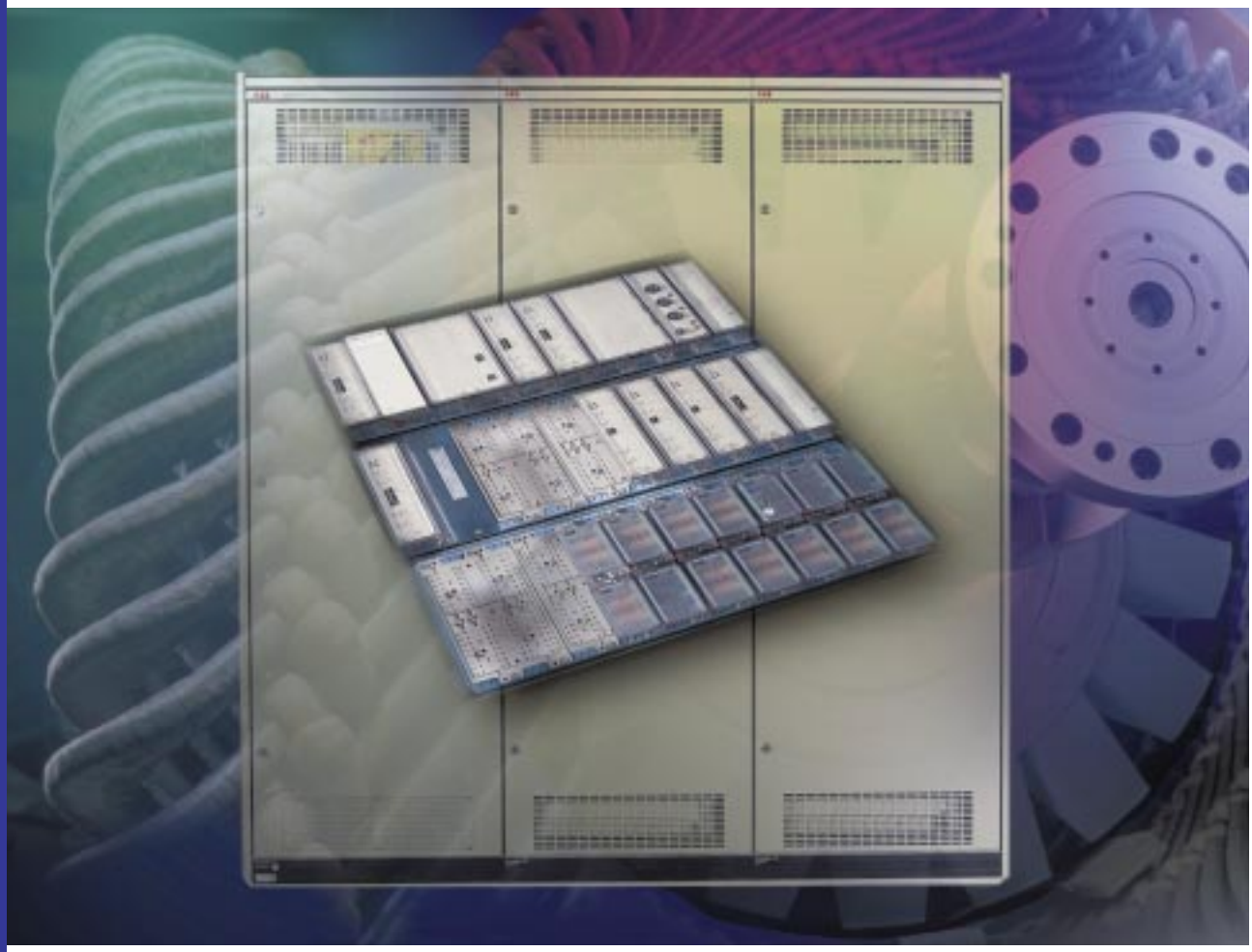

ABB Network Partner

High demands on generator safety systems

Generators in power systems

Generators are designed to operate at high output for many years, and at the same time cope with abnormal load conditions for short periods. The machines are monitored to minimise impact of incidents. Electrical or mechanical faults will occur, and the generator must be provided with protective relays which will disconnect the machine from the network when a fault is detected, and if necessary stop it completely. The standards for generator protection vary between different countries and power companies. A protection system for generators must be modifiable and flexible. The COMBIFLEX system is based on plug in modules which contain different system functions.

A reliable system

RAGCX Generator Protection is secure and reliable with many built-in functions to provide positive protection for the generator even during abnormal loading conditions. RAGCX combines the relays in two separate systems for maximum reliability. Both systems are equipped with separate D.C. voltage supply and has independent measuring functions.

A flexible system

RAGCX is a modular system. The modular design with its choice of add-on modules means that protection can be tailored to suit different types of generators and customer specific demands.

System suppliers and partners

ABB Network Partner designs, sells, supplies and maintains COMBIFLEX. The strategy has always been to develop and ensure that the power industry has leading edge, cost effective solutions. With the market's most up-to-date systems for control, monitoring and protection for switchgear, transformers and generators, we are a partner in the true sense of the word. Over the years, ABB Network Partner AB has delivered thousands of generator protection systems, accumulating a unique competence in this area.

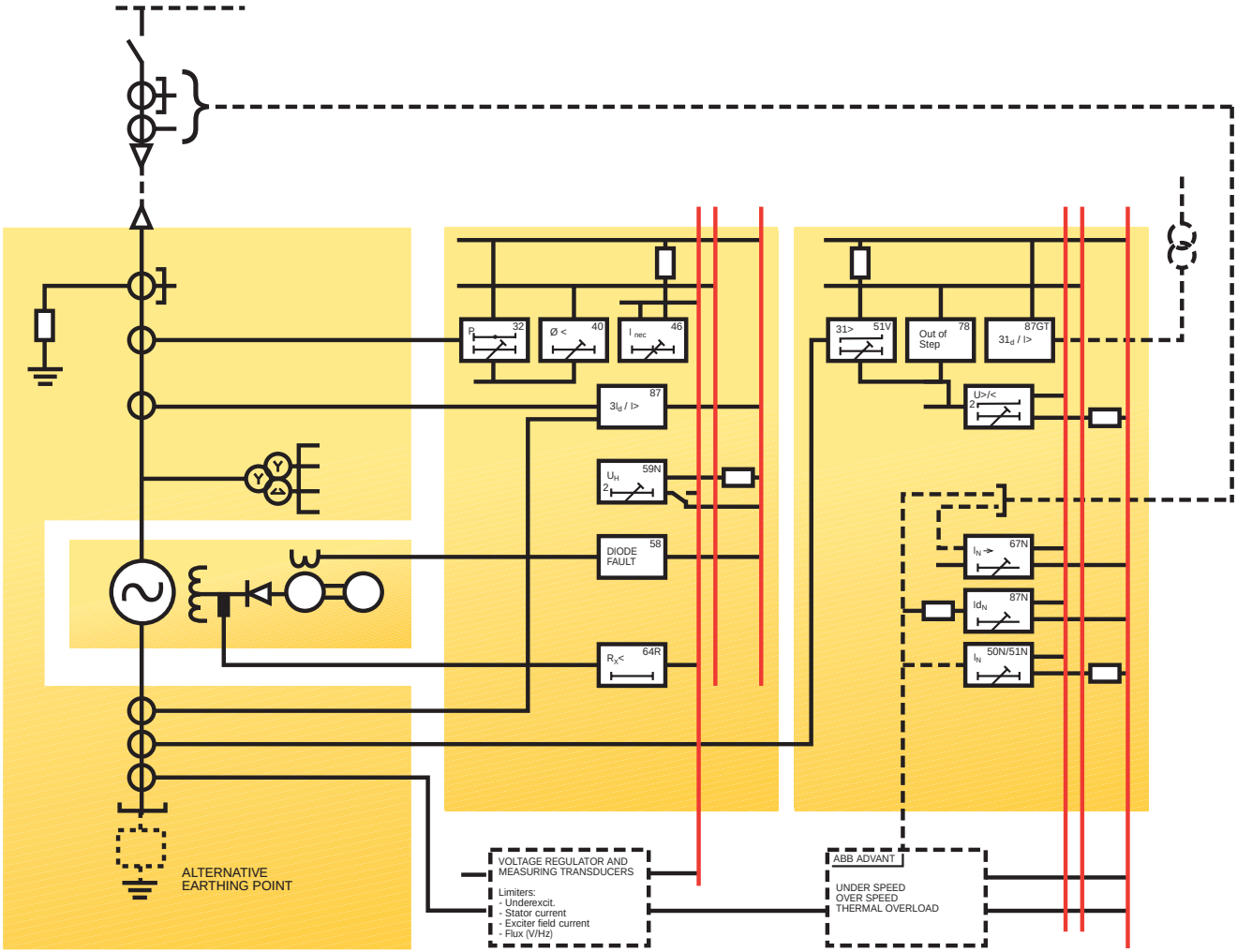

A typical ABB STAL 25 MW gas turbine protection system based on the RAGCX concept of two subsystems. The RAGCX offers maximum redundancy through the use of independent measuring elements for the different protection functions.

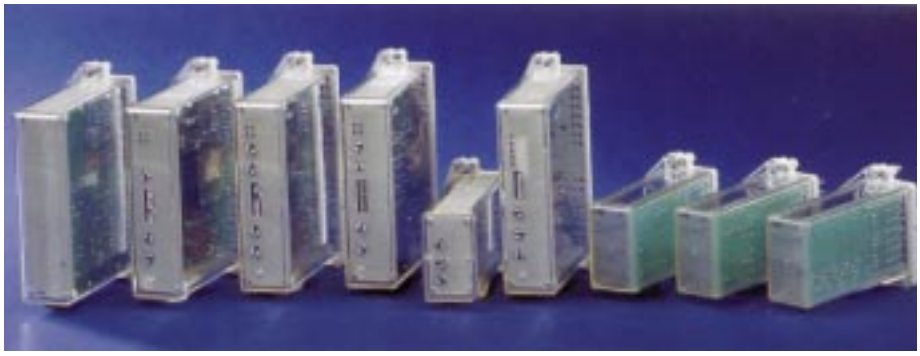

RAGCX provides maximum reliability thanks to its two separate systems having its own DC inputs and measuring functions to guarantee protection capability.
The flexibility of the new COMBIFLEX relay program enables easy adaptability to specific generator applications.

COMBIFLEX© RAGCX
A dependable concept

Maximum reliability is obtained through well defined and tested measuring functions. The outputs are connected to a trip relay matrix for each measuring relay. Each unit has outputs to signal relays and indications of different functions. A trip matrix built up from auxiliary relays reduces the need for additional equipment and simplifies construction. Each measuring function has its own outputs for different signals. This provides installations with a flexible and highly accurate protection system which can accommodate many different types of generators.

Measuring functions in RAGCX

The COMBIFLEX range includes products that can be used as measuring elements for different applications, as individual logic circuit elements or as complete units for a range of different required protection functions. All the products are compatible with components for testing, connection and marking.

RAGCX includes the following functions:
• The stator earth fault protection can be obtained as a neutral point voltage protection or as an earth fault current relay.
• The stator differential protection is percentage stabilised which provides stability against external faults and the shortest operating time is less than 25ms.

The example shown here is a rack with three 4U equipment frames containing different relay functions. The two upper racks include units for a redundant relay system. The lower includes optional extras and a trip matrix with auxiliary relays.

• Both the voltage dependent overcurrent and optionally the alternate underimpedance protection have one or two setting levels.
• The overload protection can operate with definite time or with several different inverse time characteristics.
• The reverse power protection has high angular accuracy and the protection can be set to a low percentage (0,5%) of the generator rating. Hence the reverse power protection can be used for every type of generator/turbine combination. If desired the function can even be used as a “low level” forward power protection.
• The loss of excitation protection is based on the measurement of capacitive (-85°) current.
• The rotor earth fault protection is based on injecting of d.c. or a.c. current. This means that two different relays are available.
• Inverse time negative sequence currents, inverse time thermal overload and frequency relays are options that provide added capability within the protection system. The options include an inverse time V/Hz function to protect generators and transformers against overexcitation.

Standardised and complete

RAGCX generator protection terminals are delivered as complete systems in one, two or three 19 inch racks, 4 units high. The compact design makes it suited for retrofit and extensions of existing installations.
RAGCX generator protection terminals are built from standard plug-in modules in the COMBIFLEX design. The new products are CE certified and compatible with the EU-directives.

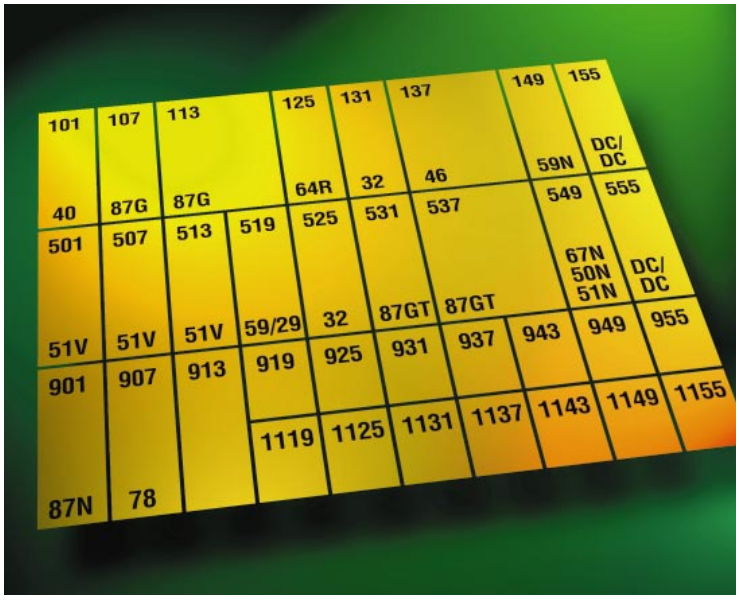

The building block principle used by COMBIFLEX and RACGX, using the 19" rack system, is both work and time saving, providing flexible protection solutions for all types of applications. The three individual rack frames shown are four units high with space for up to ten two-seat measuring relay modules or twenty single-seat relays.

Example RAGCX-package
Standard functions for gas turbines

RACK 1 (SUB 1)

				ANSI
101	RXPDK	21H	Loss of excitation protection	40
107	RTQTB	060	Transformer unit for	87G
113	RXDSC	4	Generator differential protection	87G
125	RXPDK	22H	Rotor earth fault protection	64R
131	RXPPK	2H	Reverse power protection	32
137	RXIIK	4	Negative sequence current protection	46
149			Spare	
155	RXTUG	22H	DC/DC Converter	

RACK 2 (SUB 2)

501	RXEDK	2H	Neutral point voltage protection	59N
507	RTQTB	060	Transformer unit for	87GT
Option				
513	RXDSB	4	Block differential protection	87GT
Option				
525	RXIDK	2H	Nondirect E/F prot.	50N/51N
Option				
531	RXISK	2H	Voltage restraint o/c protection	51V
537	RXISK	2H	Voltage restraint o/c protection	51V
543	RXISK	2H	Voltage restraint o/c protection	51V
549	RXEDK	2H	Over/under voltage protection	59/27
555	RXTUG	22H	DC/DC Converter	

RACK 3

			ANSI
901	RXPDK 2H (SUB2)	Restricted differential or directional earth fault protection	87N/67N
Option			
907	RXZK 23H (SUB2)	Out of step protection	78
Option			
913	RXMB1	Generator Circuit Breaker Off	
919	RXMB1	Auxiliary relay	59N/59N
925	RXMB1	Auxiliary relay	87G/87GT
931	RXMB1	Auxiliary relay	40/46
937	RXMB1	Auxiliary relay	67N/87N
Option			
943	RXMB1	Trip relay/Trip relay	
955	RXMB1	Auxiliary relay DC/DC Converter	
1113	RXMB1	Trip relay	
1119	RXMB1	Auxiliary relay	51V/32
1125	RXMB1	Auxiliary relay DC/DC Conv.	On/78
1131	RXKL1	Time relay	
1137	RXKL1	Time relay	
1143	RXMB1	Trip relay	
1149	RXMB1	Auxiliary relay	59/27
1155	RXMB1	Auxiliary relay / Trip relay	

A simple and flexible system design

COMBIFLEX is designed to meet the demands for modern generator protection. The modular concept with several independent processors means greatly improved system reliability.

A part of the Panorama Station Automation concept

COMBIFLEX is built for the future:
New technology gives new and better functions. The system complements other ABB microprocessor- based relay- and control equipment, for example the 500 series and the SPACOM range. COMBIFLEX is an integrated part of the overall Panorama Station Automation concept. The reliability of the product range has been proven and documented from over 25 years of use in different environments and applications, including nuclear power plants.

COMBIFLEX- easy to install, connect and identify

COMBIFLEX is the result of decades of practical experience. The system has been built to fit the standard 19 inch rack, making it easy to mount with other components to the same international standard. This presents many different ways of building relay and control panels.

The wire connection method used in COMBIFLEX has more than 25 years of practical industrial use and has proven to be extremely reliable. The system combines flexibility with simple installation. The system provides double snap connectors for every electric connection point.

The electrical connections are non exposed to increase safety for personnel. All of the connections are locked by a spring which also contributes to the high level of safety. The CAD system design of the RAGCX system makes easy adaption to customer requirements possible.

The standardised COMBIFLEX identification system is part of the monitoring and installation system that ensures accurate and safe operation.

The system is an important part of the chain, because it includes all stages from identification of measuring relays and other components to deciding the connections in circuit and connection diagrams. The system facilitates computer aided design.

The complete panel for excitation, control and protection of a STAL gas turbine generator set. The RAGCX relay is in the center of the middle panel.

When building complete protection units several different components are needed in order to provide a well designed system. Separate units are combined into a complete system- overall co-ordination and integration is extremely necessary.

The COMBIFLEX modular system has proved its flexibility and quality in more than 25 years of practical use. By combining a variety of new platform based numeric relay components the RAGCX generator protection systems are designed to meet the demands of today and tomorrow.

The Panorama Engineering Tool is a library on a CD, which simplifies working with relay applications.

The Engineering Tool can be connected to a CAD system and is accessible on-line during construction.

This CD is an aid for those who work with protection and control terminals. It contains extensive information to make construction work easier:

- Product information
- Illustrations
- Information about construction and symbols

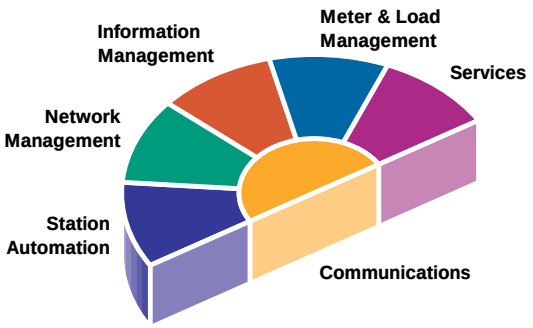

Panorama is the standard for a comprehensive range of integrated solutions for the efficient and reliable management of power networks. Using innovative information technology, Panorama delivers total control of the process, from generation to consumption. The Panorama standard covers six application areas, each offering specific solutions.

COMBIFLEX is a modularised system designed to meet the demands of the future. New technology provides new and improved function and complement other ranges of micro processor based protection and control equipment, for example the 500 series and SPACOM products.
The COMBIFLEX system is an integrated part of the Panorama Station Automation concept.

ABB Network Partner AB
S-721 71 Västerås
Sweden
Telephone +46 21 32 13 00
Telefax +46 21 14 69 18
Internet: www.abb.se/net

1MRK 502007 - SEN