Digitric 100

Versatile, universal controller for all standard applications

Installation, commissioning, configuration, parameterization, and operation

Manual

42/61-10010 EN Rev. 02

ABB

Digitric 100
Versatile, universal controller for all standard applications

Manual
Document No. 42/61-10010 EN

Edition: 05.02
Revision: 02

Manufacturer:
ABB Automation Products GmbH
Höseler Platz 2
42579 Heiligenhaus
Germany

Phone: +49 2056 12-5181
Fax: +49 2056 12-5081

© Copyright 2002 by ABB Automation Products GmbH
Subject to technical changes.

This technical documentation is protected by copyright. Translating, photocopying and diseminating it in any form whatsoever - even editings or excerpts thereof - especially as reprint, photomechanical or electronic reproduction or storage on data processing systems or networks is not allowed without the permission of the copyright owner and non-compliance will lead to both civil and criminal prosecution.

Table of contents

Page

Preface ... 9

Delivery state ... 9

Switching on the device ... 9

1 How to use this instruction ... 10
- 1.1 Visual orientation hints ... 10
- 1.2 Hints for the configuration and parameterization tables ... 10
- 1.3 Hints for the configuration menu ... 11

2 General safety instructions ... 12

3 Description and application ... 13
- 3.1 Description ... 13
- 3.2 Basic unit ... 13
- 3.3 Operating and indicator elements on the front panel ... 13
- 3.4 Programmer ... 14
- 3.5 Controller outputs ... 14
- 3.6 Parameterization ... 14
- 3.7 Configuration ... 14

4 Installing Digitric 100 ... 15
- 4.1 Identifying the device ... 15
- 4.2 Choosing the installation site ... 15
- 4.3 Mounting ... 16
- 4.3.1 Panel cutout ... 16
- 4.3.2 Mounting instructions ... 17

5 Connecting Digitric 100 ... 19
- 5.1 Signal connections of the basic unit ... 19
- 5.2 Signal connections for modules and PC ... 21
- 5.3 Connecting the power supply ... 31

6 Retrofitting ... 34
- 6.1 Safety instructions in accordance with DIN VDE ... 34
- 6.2 Mounting the module ... 34

6.2.1 Assembling of a module ... 35
6.3 Modifying modules ... 42
6.4 Adding input AI02 ... 43
6.5 Disabling the password ... 44
6.6 Updating the firmware ... 44

7 Operation ... 45
7.1 Operating elements on the Digitric 100 front panel ... 45
7.2 LC Display ... 46
7.3 Alarm handling ... 49
7.4 Automatic mode (A) ... 50
7.5 Manual mode (M) ... 51
7.6 Setpoints ... 52
7.7 Ratio controller ... 53
7.8 Programmer ... 55
7.8.1 Selecting the program ... 55
7.8.2 Starting the program ... 55
7.8.3 Displays during program execution ... 56
7.8.4 Stopping the program ... 57
7.8.5 Fast forward/backward ... 58
7.9 DDC control ... 59
7.9.1 Resetting (cancelling) the program ... 59
7.10 Stations ... 61
7.10.1 Manual station ... 61
7.10.2 Setpoint station ... 62
7.10.3 Ratio station ... 62
7.10.4 Positioner ... 63
7.11 Remote control (Profibus or Modbus) ... 63

8 Error information on the display ... 64

9 Menu structure ... 66
9.1 Indication 2 ... 68
9.1.1 Parameter display ... 68
9.1.2 Inputs/outputs ... 69
9.1.3 Effective PID parameter ... 70
9.1.4 Identification ... 70

9.1.5 Library identification ... 71
9.1.6 Version display ... 71
9.2 Operate 2 ... 72

10 Password protection ... 74

11 Parameterization ... 76
11.1 Parameterization menu ... 76
11.2 Selecting and changing parameters ... 77
11.3 Parameter categories ... 78
11.3.1 Instrument parameterization ... 78
11.3.2 Loop 1 parameterization ... 78
11.4 Self-tune ... 81
11.4.1 Procedure ... 81
11.4.2 Parameters ... 81
11.4.3 Starting self-tuning ... 82
11.4.4 Accepting the parameters ... 84
11.4.5 Rejecting the parameters ... 85
11.4.6 Cancelling self-tuning ... 85

12 Configuration ... 86
12.1 Selecting the configuration ... 86
12.2 Configuration table structure ... 87
12.3 Sequence of configuration ... 87
12.4 Changing the configuration ... 88
12.5 Exit configuration menu ... 89

13 Configuration examples ... 90
13.1 Device ... 91
13.1.1 Hardware ... 91
13.1.2 Password ... 92
13.2 AI definition ... 93
13.2.1 General ... 94
13.2.2 Sensor problems ... 94
13.2.3 Dimension ... 95
13.2.4 Filtering ... 95
13.2.5 mA inputs ... 96

13.2.6 Thermocouple input 96
13.2.7 Resistance thermometer input 96
13.2.8 Teletransmitter input 97
13.3 Characteristic curve 97
13.4 Setpoints 98
13.4.1 Setpoint 1 98
13.4.2 Setpoint SP2 to SP4 = Ratio setpoint SR1 to SR3 99
13.4.3 Computer setpoint 99
13.4.4 Setpoint ramp 99
13.5 Programmer 100
13.5.1 Configuring programs 100
13.5.2 Parameterizing programs 101
13.5.3 Programming table for a program 102
13.6 Fixed-value control 104
13.6.1 Task 104
13.6.2 Configuration 104
13.6.3 Example 1 105
13.6.4 Example 2 106
13.7 Multi-component control 108
13.7.1 Application 108
13.7.2 Configuration 108
13.8 Ratio control 110
13.8.1 Ratios and setpoints 110
13.8.2 Ratio control: Mixed control 112
13.9 Multiplication 115
13.10 Parameter changeover/control (Gain scheduling) 117
13.10.1 Parameter changeover 117
13.10.2 Parameter control 118
13.11 State correction 120
13.11.1 Input and output routing 120
13.11.2 Terms and abbreviations 120
13.11.3 Configuration for gas and steam 121
13.11.4 Configuration for water mass flow 122
13.11.5 Configuration for drum water level 122
13.11.6 Gas and steam 123
13.11.7 Water mass flow 126

13.11.8 Drum water level . . . 127
13.11.9 Configuring an analog output for outputting state correction results . . . 128
13.12 Control outputs . . . 130
13.12.1 Two-point controller . . . 131
13.12.2 Three-point controller . . . 132
13.12.3 Motorized valve control (Step controller) . . . 133
13.12.4 Positioner . . . 133
13.12.5 Controller with relay output . . . 133
13.12.6 Continuous controller . . . 134

14 Service . . . 135
14.1 Information (general) . . . 136
14.2 Hardware information . . . 136
14.3 Display unit . . . 137
14.3.1 Contrast of the LCD . . . 137
14.4 Adjustment . . . 138
14.4.1 Example: Adjusting the Pt100, 2-wire, for AI01 . . . 138
14.4.2 Example: Adjusting a teletransmitter, 1500 ohms, on AI01 . . . 139
14.5 Calibration . . . 141

15 Supervisor . . . 142
15.1 Plausibility . . . 143
15.2 Master reset . . . 144
15.3 Template (Quick configuration) . . . 145

16 Quick configuration in the Template menu . . . 146
16.1 Setting the controller to the desired language . . . 148
16.2 Navigating through the template . . . 149
16.3 Possible entries in the template . . . 150
16.4 Basic variants in the template . . . 151
16.5 Additional variants in the template . . . 152
16.6 Alarm variants in the template . . . 154
16.7 Type of analog input AI01 and AI02 in the template . . . 156
16.8 Examples for template variants . . . 157

17 Tables for menus: Indication2/Operate2/Selftune/Service/Supervisor . . . 158

18 Tables for the configuration menu 166

19 Tables for the parameter setting menu 185

20 Error codes 190

20.1 Device errors 190
20.1.1 Error codes 191
20.1.2 Error details 193
20.2 Error codes of the controller selftune routine 194
20.3 Error codes of the input/output level 195

21 Technical data 196

Inputs 196
Outputs 197
Serial interfaces 197
CPU data 198
Power supply 198
Environmental conditions 198
Electromagnetic compatibility 198
Connection, case, safety 199
Modules 199
Analog inputs 200
Binary inputs/outputs 202
Analog outputs 204
Interface modules 204

22 Packaging for transport or return to the manufacturer 205

23 Index 206

Preface

This documentation No. 62/61-10010 delivered with the Digitric 100 controller contains instructions for:

commissioning,
installation,
configuration,
parameterization
operation

The following additional documents are available upon request:

Operating instructions for IBIS-*R*, IBIS-*R*+	42/62-50020
Operating instructions for IBIS-R+	42/62-50030
Interface description (MODBUS)	42/62-50040
Interface description (Profibus DP-V1)	42/62-50050

The operating instructions in this manual include all important information for menu-guided configuration and parameterization of he Digitric 100 controller. All necessary entries can be made locally via the device's front panel operating elements, or remotely from a PC with the IBIS-*R*+ configuration and parameterization program.

The configuration options of the Digitric 100 menu are also available in the IBIS-*R*+ program. The description of this program is beyond the scope of this manual.

Delivery state

The devices are delivered off stock and without customized settings. The factory setting is adjusted to the following functions:

– Single-loop continuous controller
– Input: 4...20 mA
– Output: 4...20 mA
– Language: German
(setting to english or french is shown in Section 16.1, Setting the controller to the desired language)

The factory setting and its definitions are described in detail in this manual. Customized versions are available upon special request.

Switching on the device

Upon power-on or return of the power after power failure the device automatically performs a selftest of the internal functions. The progress of the test program can be seen on the display. Usually, no special attention has to be paid to this display.

1 How to use this instruction

1.1 Visual orientation hints

<Enter>	Control buttons on the device front panel, with description
<Ind>	
<Menu>, <Enter>	Buttons that are always enabled for operator actions
[P-SP]	Texts or text parts shown by the digital indicator
[P-SP], A	Flashing texts or text parts shown by the digital indicator
/8/	Reference to the numbers/fields specified in Fig. 7-1
M❂, A❂	Light emitting diode (LED) at the button of the same name is lighted
M●, A●	
Menu●, Enter●	Light emitting diode (LED) at the button of the same name is off
Sxt	External setpoint source
Manual	Operating mode

1.2 Hints for the configuration and parameterization tables

I	Instrument
AI	Analog input
AO	Analog output
BIO, BI/BO	Binary input/output
L1	Control loop No. 1
SC	State correction
Pxx	Programmer for program PO1 to P10
P01	Parameter 1
B01	Block 01
Q01	Question 01
Parameterization	
L1-P01	Loop 1, Parameter 01 = Gain
Configuration	
I-B01, Q01	Instrument, block 1, question 1 = language
L1-B03-Q02	Loop 1, block 3, question 2 = multi component structure

1.3 Hints for the configuration menu

The input values AIx, BIx and the outputs AO1 and BOx are global variables in the device.

The binary inputs can simultaneously trigger several functions, e.g. changeover between AI01 and AI02 with simultaneous parameter changeover.

The binary outputs can output several logically ORed data.

Be careful when configuring the controller.

Input and output names and numbers

Basic unit:
The analog inputs and outputs have the designations AI01 and AI02 or AO01. AI02 is an optional input that can be connected to the main board.

The binary inputs/outputs are called BIO01 and BIO02. They are used as input BI0x or as output BO0x, depending on the configuration.

The relay outputs are called BO03, BO04 and BO05 and are NO contacts.

Modules:
Besides the optional AI02 the Digitric 100 controller also provides a module slot.

Up to 4 analog or up to 6 binary input/outputs can be processed in the plug-in modules. In the device, the inputs and outputs have the following designation:

AI1y	Analog input No. y of the module in slot 1
AI12	Input 2 of the module in slot 1
BI16	Binary input 6 in slot 1
BO14	Binary output 4 in slot 1

2 General safety instructions

Safety instructions

This chapter contains important instructions for your safety!
Read and observe.

Instructions for proper use

These operating instructions are a reference manual for the Digitric 100 process controller.

Proper and safe operation of the Digitric 100 controller requires proper transportation and storage, installation and commissioning by qualified personnel, proper use and careful maintenance.

Only qualified personnel who are familiar with the installation, commissioning, operation and maintenance of this or similar devices are authorized to work on Digitric 100.
Observe
– the present operating instructions,
– the safety instructions attached to the device
– the relevant safety regulations and standards for the installation and operation of electrical systems.

The regulations, standards and directives referred to in these operating instructions are applicable in Germany. When using the Digitric 100 controller outside the German Federal jurisdiction, the relevant regulations, standards and directives applicable in the country where the device is used must be observed.

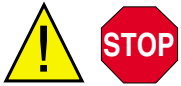

Digitric 100 has been designed, produced and tested in accordance with EN 61 010-1 = IEC 1010-1 = DIN VDE 0411 Part 1 "Safety Requirements for Electrical Measuring, Control and Laboratory Apparatus" and has been supplied in a safe condition. The present operating instructions contain warnings and cautions marked accordingly, which must be followed by the user to retain the device in a safe condition and to ensure safe operation. Otherwise, persons can be endangered or the device itself or other devices or equipment may be damaged or fail.

If you should need any information which is not contained in the present operating instructions please contact the ABB Service.

Proper use

Digitric 100 is a single-loop compact controller for the instrumentation of single control loops which can be connected to supervisory controllers and systems.

To ensure proper use, read and observe the "Technical data" in the data sheets and in Section 21, Technical data of this manual.

3 Description and application

3.1 Description

The industrial controller Digitric 100 is a compact controller for the instrumentation of single control loops. It is universal and can be used for both simple and complex control tasks.

3.2 Basic unit

1 universal input for the process value
Thermocouples, Pt100 resistance thermometers, teletransmitters and 0/4...20 mA standard signals can be connected to the basic unit without requiring any hardware changes. When using non-linearized temperature transmitters the linearization is performed in the controller.
The appropriate linearization tables for all standard transmitters are stored in the device.

1 output 0/4-20 mA for the output signal or other values, e.g. setpoint or actual value, electrically isolated.

2 binary inputs/outputs 24 V DC which can be configured as inputs or outputs, as required. They can be used as controller outputs or alarm outputs, but also as inputs for switching over the controller (e.g. from manual to automatic mode.)

3 relays for the output signal or alarm outputs, or for error messages.

One **2nd universal input** for additional functions (e.g. external setpoint, input circuit, ratio control, etc.)
This input is optional and can be plugged onto the main board.
Thermocouples, Pt100 resistance thermometers, teletransmitters and 0/4...20 mA standard signals can be connected to the basic unit without requiring any hardware changes. When using non-linearized temperature transmitters the linearization is performed in the controller.
The appropriate linearization tables for all standard transmitters are stored in the device.

1 module slot for extending the inputs/outputs.

3.3 Operating and indicator elements on the front panel

Various operating and indicator elements inform the operator about the process status and permit direct operator intervention. Numerical and plain text displays give an exact reading of setpoints and output values and allow the operator to modify the settings if required.

3.4 Programmer

Every device contains a configurable programmer for defining a time-dependent setpoint. Up to 10 programs with 15 segments each can be saved in the device.

3.5 Controller outputs

S1 On/Off controller, PID action
S2 Controller for heating-off-cooling, optionally with two switching or one continuous and one switching output.
M Motorized valve control (step control)
C Continuous controller, optionally with split-range output with two continuous output signals

3.6 Parameterization

The parameter level - which can be protected with a password - can be accessed in the menu level. On this level the existing device function parameters like controller gain or time constant can be set.

3.7 Configuration

List configuration
The configuration level - which can be protected with a password - can be accessed in the menu level. On this level the standard functions can be selected from a list saved in the device. Digitric 100 can be configured either locally via its front panel operating elements, or remotely from a PC with **IBIS_R+**. Remote configuration can considerably simplify the configuration procedure if several devices with the same setting are to be configured.

4 Installing Digitric 100

4.1 Identifying the device

See the rating plate attached to the side of the device for the device ID.

4.2 Choosing the installation site

Digitric 100 is designed for front mounting in control rooms, in cabinets and on machines. When choosing the installation site observe the environmental and mechanical capabilities specified in the "Technical data" section.

Warning
To ensure full protection against accidental contact only use the device in the installed state.

4.3 Mounting

4.3.1 Panel cutout

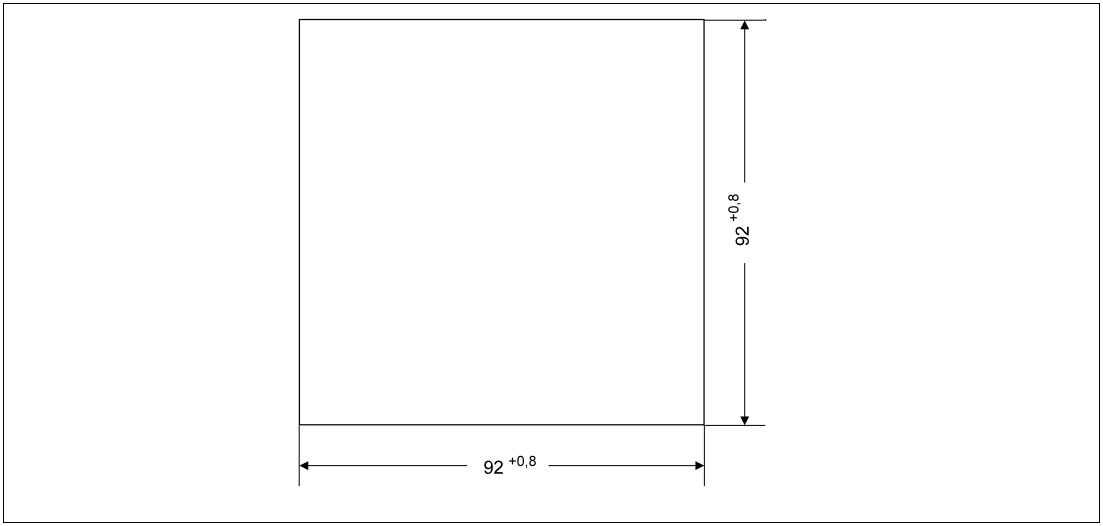

Fig.4-1 Panel cutout (dimensions in mm)
Z-19166

- Panel cutout to DIN 43 700: $92^{+0.8}$ mm $\times$ $92^{+0.8}$ mm
- When mounting the devices side by side, observe a minimum spacing of 10 mm between them
- Provide for a sufficient spacing above and below the devices to ensure proper ventilation
  Minimum spacing above and below: 40 mm
  Note
  The spacing between the devices must not be affected by the cables.

4.3.2 Mounting instructions

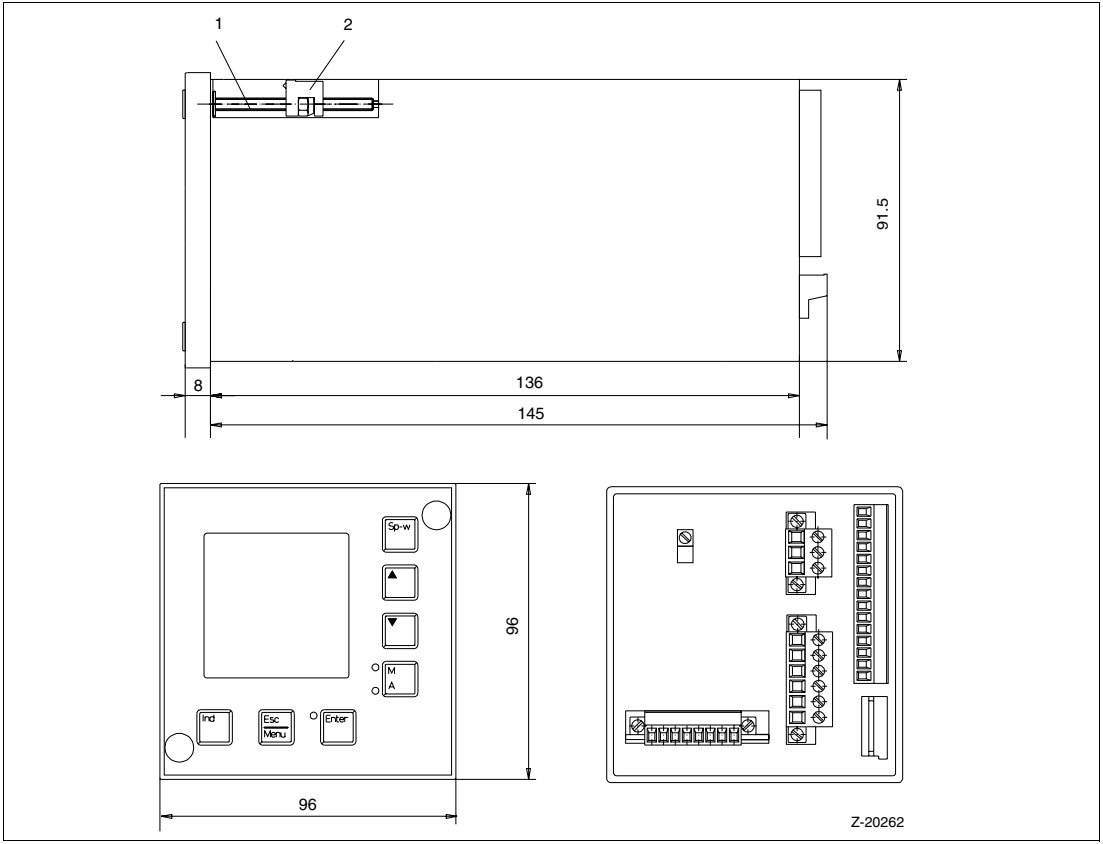

Fig.4-2 Dimensional drawings (dimensions in mm)
Z-19168 1 Fastening screw for tensioning clamp 2Tensioning clamp

Mounting procedure

Step	Action
1.	Remove at the front both screw covers.
2.	Turn the fastening screw for the tensioning clamp (1) counterclockwise until you are able to snap in the tensioning clamp (2) behind the panel.
3.	Insert the device into the panel cutout from the front.
4.	Turn the fastening screw of the tensioning clamp (1) clockwise until the tensioning clamp snaps in behind the front panel and retains the device reliably. Make sure that there is a conductive bonding between the housing, the fastening screw and the panel. **Note** The conductive bonding is required to ensure the electromagnetic compatibility (EMC) of the device.
5.	Pull in both screw covers.

5 Connecting Digitric 100

Note When the device is switched on, an internal test routine is started and runs down for around 15 seconds. The progress of the self-test is seen on the display.

5.1 Signal connections of the basic unit

(see Fig. 5-1 and Fig.5-2)
Connect with pluggable screw-terminals for wire or stranded wire, wire CSA up to 1.5 mm^2, for relays up to 2.5 mm^2.

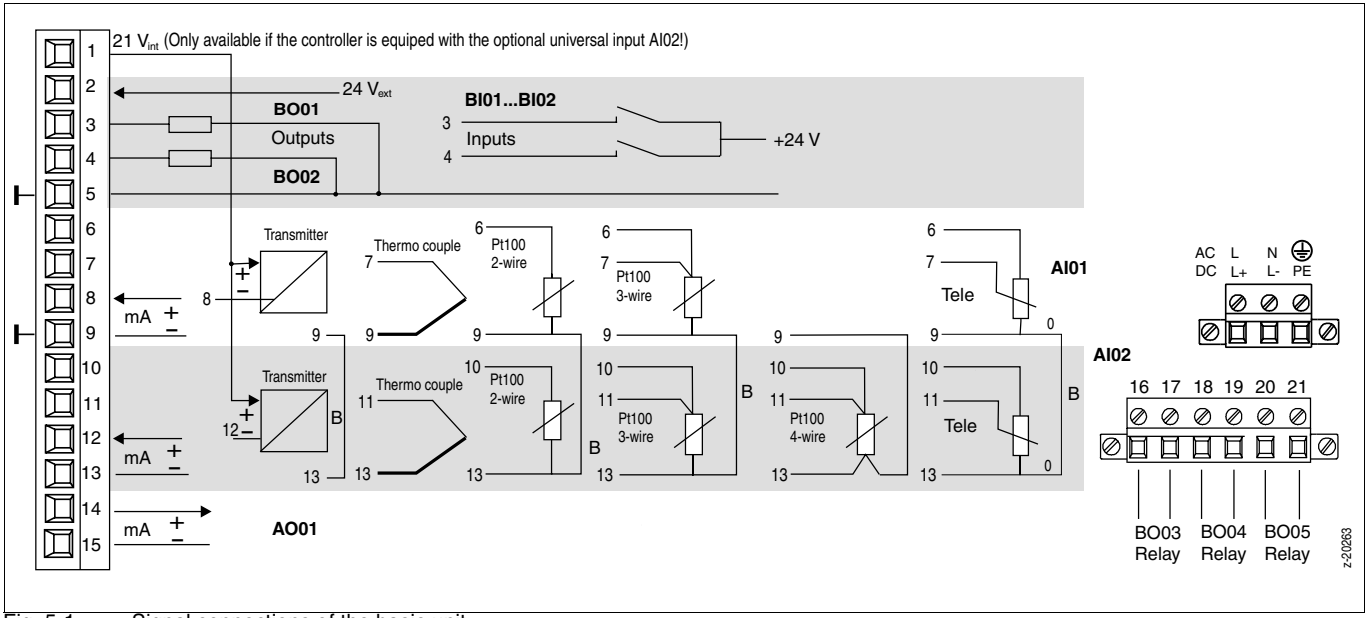

Fig. 5-1 Signal connections of the basic unit
(description see next page)

Description for Fig. 5-1

1 21 V int (Only available if the controller is equiped with the optional universal input AI02!)
2 Input of power supply for binary outputs
3 Binary port 1 (a binary port can be used as binary input or output))
4 Binary port 2
5 Zero potential
6 Analog input 1
7 Analog input 1
8 Analog input 1
9 Analog input 1+ 2 (AI02 optional)
10 Analog input 2 (AI02 optional)
11 Analog input 2 (AI02 optional)
12 Analog input 2 (AI02 optional)
13 Analog input 2 (AI02 optional)
14 Analog output 1
15 Analog output 1
16, 17 Relay output (NO contact) BO03
18, 19 Relay output (NO contact) BO04
20,21 Relay output (NO contact) BO05
AO01 Analog output 1 (0/4...20 mA)
AI01 Universal input
AI02 Optional universal input
B The bridge is only required for transmitter supply via terminal 1 or Pt100 (2-wire/3-wire) or teletransmitter supply via AI 02. The bridge must provide a low-resistance connection between terminals 9 and 13 on the shortest way.
BI01,BI02 Binary inputs
BO01, BO02Binary outputs
BO03,BO04,BO05Relay outputs (NO contacts)
Tele Teletransmitter
21-V int. Optional supply for 2-wire transmitter and/or binary inputs and outputs (is available only if 2. universal input is installed).
24-V ext. External power supply

5.2 Signal connections for modules and PC

Overview

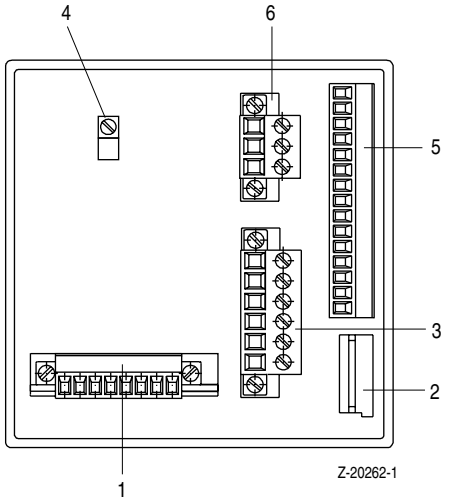

Fig.5-2 Digitric 100, rear view with terminal strip

1 Module slot
2 PC connection (configuration interface)
3 Relay outputs
4 Cable clamp for connecting the cable shield
5 Signal connections for basic unit
6 Power connection

Modules (can be retrofitted)
A module can be retrofitted at a later time. The following table shows an overview of the available module types. The optional analog input AI02 is plugged onto the main board of the device and is not considered as a module.

Module type	Designation	ID	see	Catalog number
Inputs				
AI4_mV=AE4_mV	4-fold thermocouple with electronic isolation	E	Fig.5-5	62619-0346280
AI2_mA/mV_OI= AE2_mA/mV_TR	2-fold thermocouple or mA with opto isolation	B	Fig.5-4	62619-0346250
AI4_PT_2W =AE4_PT_2L	4-fold Pt100 2-wire circuitry	F	Fig.5-6	62619-0346255
AI2_PT_3/4W =AE2_PT_3/4L	2-fold Pt100 3/4-wire circuitry	G	Fig.5-7	62619-0346281
AI4_F=AE4_F	4-fold frequency input	H	Fig.5-8	62619-0346444
AI4_mA=AE4_mA	4-fold mA with electronic isolation	A	Fig.5-3	62619-0346254
Binary inputs/outputs				
BIO6_BIN =BEA6_BIN	6-fold binary input/output	M	Fig.5-11	62619-0346282
Outputs				
AO3_mA =AA3_mA	3-fold 20 mA	N	Fig.5-9	62619-0346252
AO3_mV =AA3_mV	3 -fold 10 V	P	Fig.5-10	62619-0346253
BO4_REL =BA4_REL	4-fold relay	T	Fig.5-12	62619-0346263
Interfaces				
RS 485	RS 485, independent of protocol, bus-compatible, transmission rate of up to 187500 bauds	U	Fig.5-14	62619-0346324
RS 232	RS 232, independent of protocol, not bus compatible	Y	Fig.5-13	62619-0346326
PROFIBUS	PROFIBUS DP /DP-V1 (slave)	Z	–	62619-0346470

Table 5-1 Module overview

AI4_mA=AE4_mA: Analog input module 4 × mA
4 inputs, 0/4...20 mA, with electronic isolation

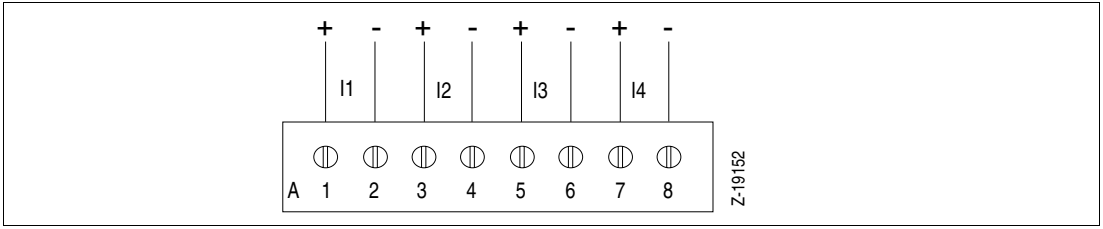

Fig.5-3 Analog input module 4 × mA
z-19152

AI2_mA/mV-OI=AE2_mA/mV_TR: Analog input module 2 × mA or thermocouple / mV
2 inputs, 0/4...20 mA with opto isolation; each input can be switched to thermocouple/mV (-10...80 mV) by setting the jumper accordingly (see "Modifying modules").

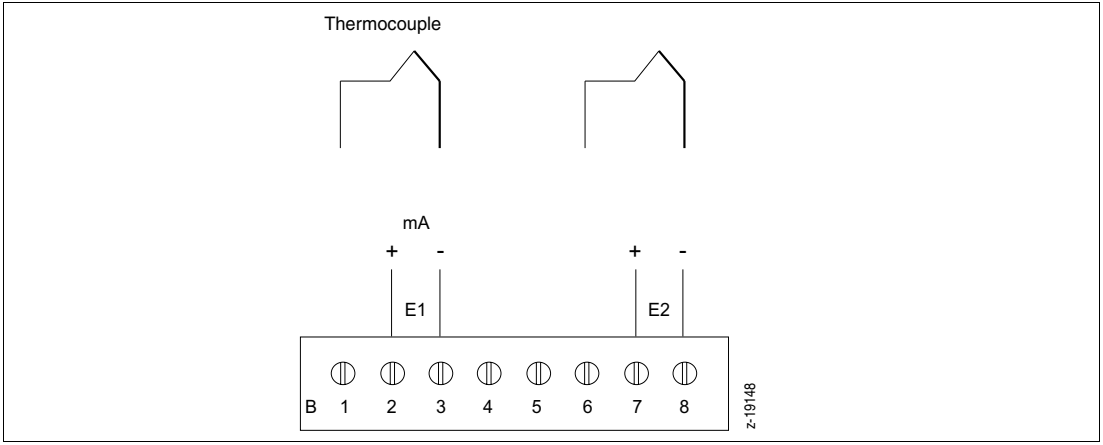

Fig.5-4 Analog input module 2 × mA or thermocouple / mV (z-19148)

AI4_mV=AE4_mV: Analog input module 4 × thermocouple
4 inputs, -10...80 mV, with electronic isolation

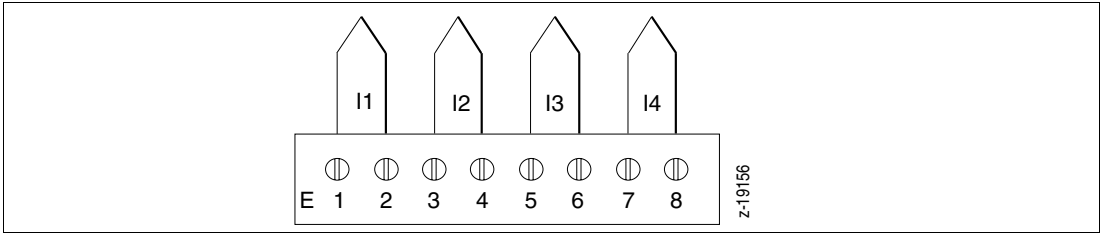

Fig.5-5 Analog input module 4 × thermocouple
z-19156

AI4_PT_2W=AE4_PT_2L: Analog input module 4 × Pt100, 2-wire
4 inputs for 2-wire Pt100

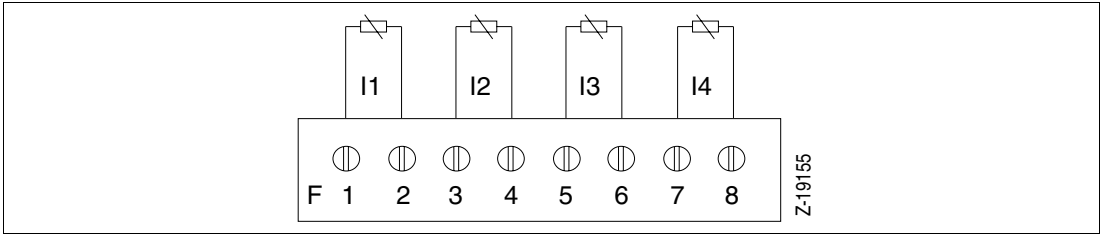

Fig.5-6 Analog input module 4 × Pt100, 2-wire
z-19155

AI2_PT_3/4W=AE2_PT_3/4L: Analog input module 2 × Pt 100, 3-wire/4-wire
2 inputs for 3-wire or 4-wire Pt 100 or teletransmitter

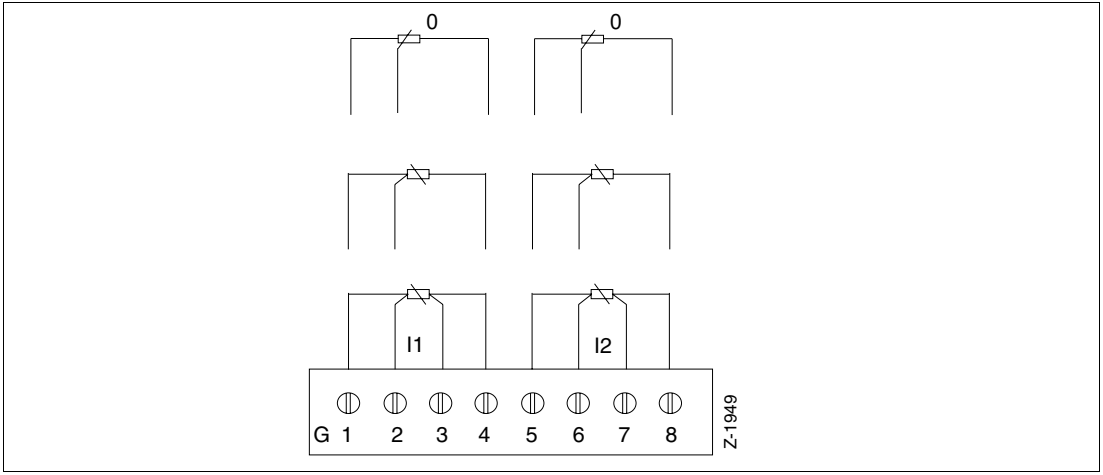

Fig.5-7 Analog input module 2 × Pt100, 3-wire or 4-wire
z-19149

AI4_F=AE4_F: Frequency input module 4 × F
4 frequency inputs

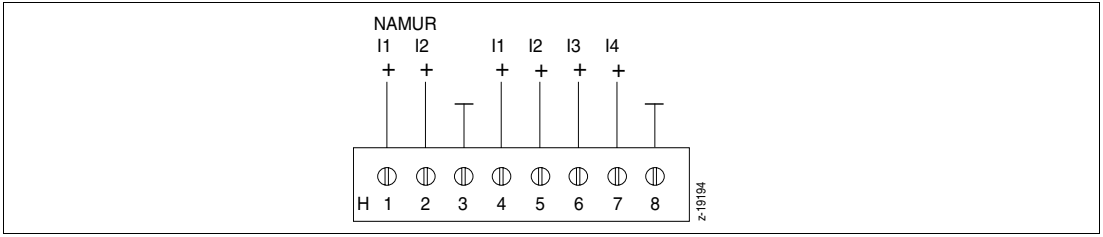

Fig.5-8 Frequency input modules 4 × F (z-19194)

Input	Frequency measurement	Time measurement	Pulse counter	Increment	Increment with zero point
I1	AIx1[1]	AIx1	AIx1	AIx1	AIx1
I2	AIx2	AIx2	AIx2		
I3	AIx3	AIx3	AIx3	AIx3	Zero
I4	AIx4	AIx4	AIx4		disabled

Table 5-2 1 if 0...20 kHz only input 1

The four inputs of a module can be used with the same measuring task, only.

With increment measurement the rotation or moving direction is recognized. Two inputs are linked and give a resulting input.

With increment measurement with zero point recognition the rotation or moving direction is recognized and set to zero via a third input. This permits an absolute travel/angel measurement. Three inputs are linked to each other and give a resulting input. The fourth input cannot be used in this case.

AO3_mA=AA3_mA: Analog output module 3 × mA
3 current outputs 0/4...20 mA on maximum 750 Ω, short-circuit-proof, open-circuit-proof

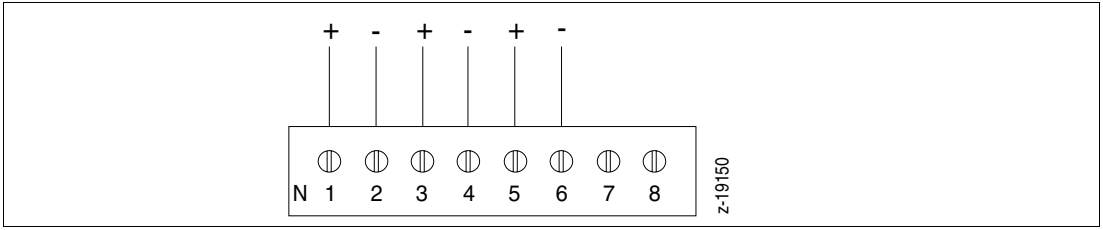

Fig.5-9 Analog output module 3 × mA

AO3_V=AA3_V: Analog output module 3 × V
3 voltage outputs 0/2...10 V

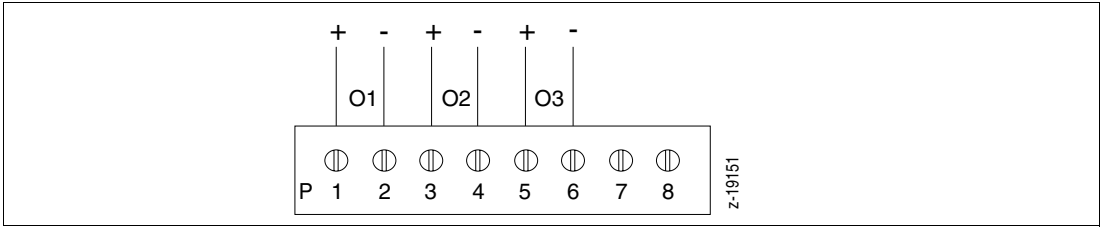

Fig.5-10 Analog output module 3 × V

BIO6_BIN=BEA6_BIN: Binary input/output module (with electrical isolation)
6 binary inputs, can be configured as inputs or outputs

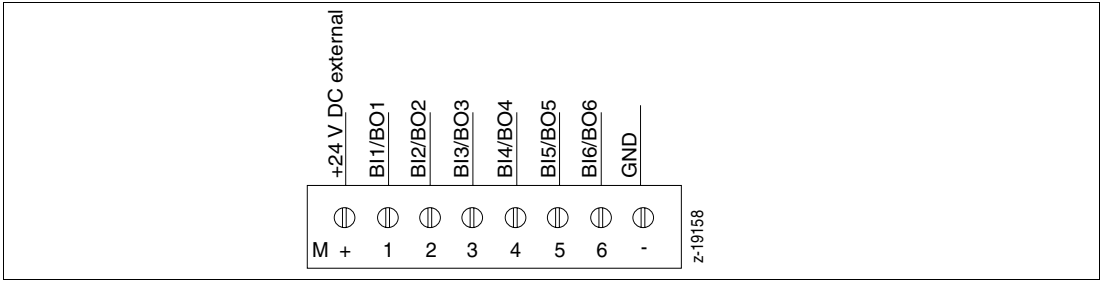

Fig.5-11 Binary input/output module 6 × binary
z-19158

BO4_REL=BA4_REL: Binary output module 4 × relay
4 relays with NO contacts

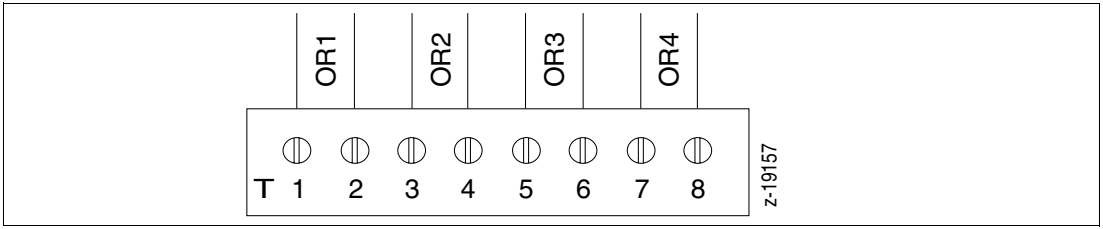

Fig.5-12 Binary output module 4 × relay
z-19157

Warning
Maximum switching voltage 250 V AC, maximum switching current 1 A, cosφ = 0.9
If extra low voltages (≤ 50 V) and mains voltages (≥ 100 V) are to be applied to the same module, one relay between those must remain unused to provide the necessary air gaps and creep distances between the individual circuits in accordance with EN 61 010-1.

RS-232 interface module

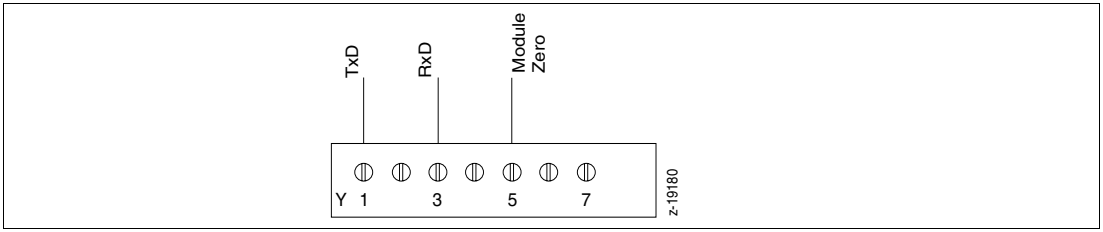

Fig.5-13 RS 232 Interface module
z-19180

Connection of the interface via 9-pin SUB-D connector plug, pin assignment see below

SUB-D connector	**RS 232 interface**
Pin 2 RxD	Pin 1 TxD
Pin 3 TxD	Pin 3 RxD
Pin 5 GND	Pin 5 Zero

RS-485 interface module (with electrical isolation)

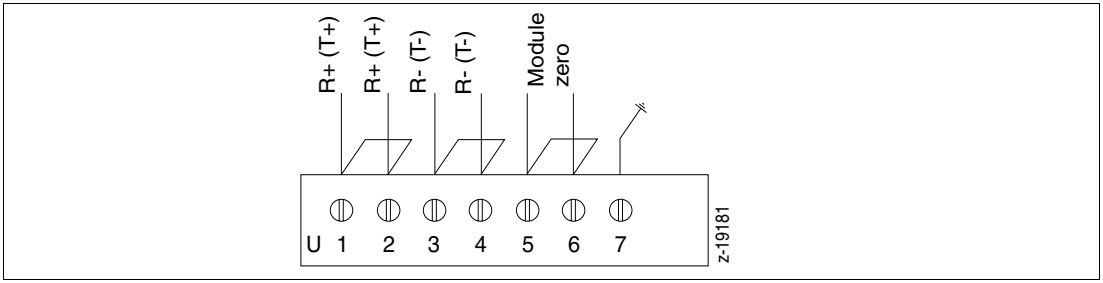

Fig.5-14 RS 485 interface module
z-19181 The jumpers are only required if the interface link must not be interrupted when the connector is un plugged.

Connection of the interface via 9-pin SUB-D connector plug, pin assignment see below

SUB-D connector	**RS 485 interface module**
Pin 3 RxD	Pin 1 R+
Pin 8 RxD	Pin 3 R–
Pin 5 GND	Pin 5 Zero

Note

The bus cable is a shielded cable with at least 3 wires: a twisted wire pair used for signal transmission, and an insulated wire for realizing the equipotential bonding between the "module zero" conections and all other electrically isolated bus stations.

The cable shield is necessary to comply with the EMC requirements and additionally improves the EMI/RFI resistance of the interface. The cable shield is connected via the cable clamp to the rear panel (see Fig.5-2).

Potential equalization is vital to ensure proper operation of the interface. The insulated wire in the data transmission cable can only provide for potential equalization if all other bus stations (except the PC) are also electrically isolated.

When using bus stations that are not opto isolated, usually an additional potential equalization cable with a sufficient CSA must be added.

PROFIBUS
See operating instructions 42/62-50050

5.3 Connecting the power supply

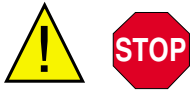

Warning

Observe the regulations for the installation of high-voltage systems with a rated voltage of up to 1000 V (DIN VDE 0100) when selecting the cable material and installing the power connections.

Prior to making any other connections always provide an equipment grounding conductor between the PE connector and protective earth, to ensure protection against accidental contact.

Note

The protective earth conductor (PE) must also be connected if only a 24 V power supply is used.

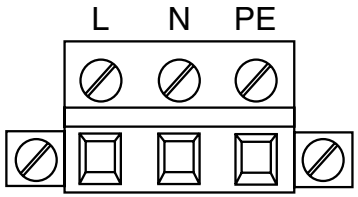

Fig.5-15 z-19161
115/230 V AC power connection
L live conductor
N neutral conductor
PE conductor

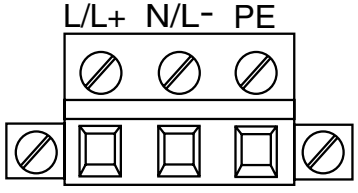

Fig.5-16 z-19163
24 V UC power connection
DC Plus on L/L+
Zero on N/L-
AC L/L+ and N/L-
PE conductor

Connecting the power supply

Warning

Observe the regulations for the installation of high-voltage systems with a rated voltage of up to 1000 V (DIN VDE 0100) when selecting the cable material and installing the power connections. Prior to making any other connections always provide an equipment grounding conductor between the PE connector and protective earth, to ensure protection against accidental contact.

Note
The protective earth conductor (PE) must also be connected if only a 24 V power supply is used.

Warning

Prior to opening the device always disconnect all hazardous voltages (mains voltage for power supply and on relay modules). The permissible operating voltage of the device is seen on the rating plate attached to the side of the device.

Warning

Exclusively connect the 24 V DC device to supply systems with extra low voltage and protective separation from other circuits.

	A special, externally installed isolating switch in accordance with EN 61 010-1, section 6.12,2 must be provided to disconnect the device from power if required. The live power connector "L“ or „L/L+“ has an internal fuse T 2.5 A 250 V. No additional fuse protection is required for the controller. Connect via pluggable screw terminals for wire or stranded wire, CSA up to 2.5 mm^2. **Warning** Prior to switching on the device make sure that the rated operating voltage of the device is identical with the mains voltage. See the rating plate attached to the side of the device for specifications. Note When the device is switched on, an internal test routine is started and runs down for around 15 seconds. The progress of the self-test is seen on the display.

6 Retrofitting

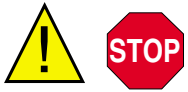

6.1 Safety instructions in accordance with DIN VDE

When opening covers or removing parts - except if this is possible without using a tool - be aware that live parts may be exposed. Note that even connections may be live. Prior to opening the device and when working on the device always disconnect it from power. Only experts who are aware of the potential risks are allowed to work on the open device when it is live.
Capacitors inside the device may still be charged, even when the device has already been disconnected from power.
If you are in doubt whether safe operation is still ensured, immediately put the device out of operation and secure it against being put in service by accident.

It must be assumed that safe operation is no longer ensured if the device
- has visible damages
- does no longer work
- has been stored under detrimental conditions
- has been submitted to harmful transport conditions and may have been damaged during transport

6.2 Mounting the module

Warning
Prior to mounting the module switch off all hazardous voltages (mains voltage for power supply and on relay modules).

During operation the module must be in the housing, and the housing must be closed properly (rear panel in place).

6.2.1 Assembling of a module

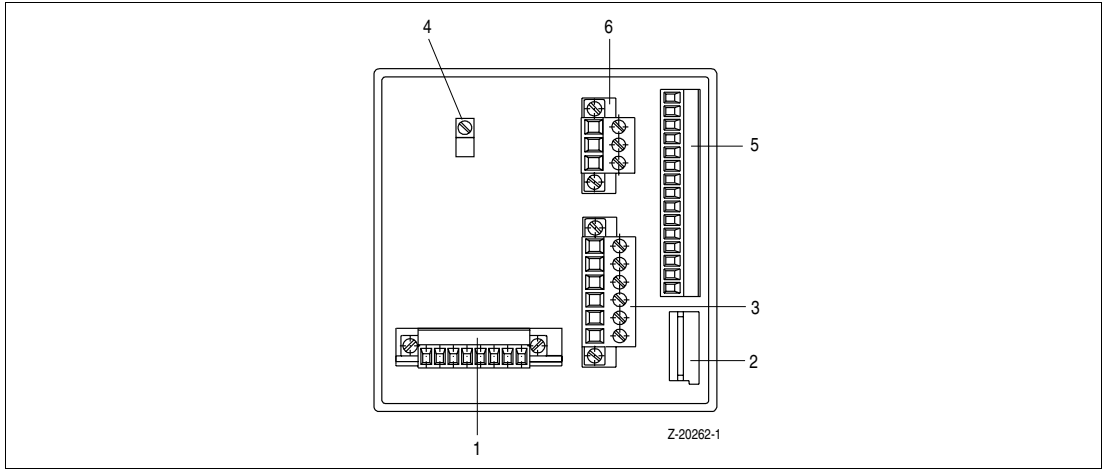

Fig.6-1 Digitric 100, rear view with terminal strips

1	Module slot	2	PC terminal (configuration interface)
3	Relay outputs	4	Cable clamp for connecting the cable shield
5	Terminal of basic I/O	6	Power connector

If no module is assembled in the module slot (1) the empty slot can be equipped with a module. It is also possible to replace a existing module by another module. You will find a detailed description on the following pages.

Note If you assemble a Modbus-module (RS 232 or RS 485) or a Profibus-DP-module, you have to connect the shield of the cable with the cable clamp (4) to the rear wall of the controller.

Note After the mechanical assembly the module has to be in addition recognized at the controller.

This can be done by CONFI-INSTRUMENT-B11-Q01=1 (automatic recognizing of a assembled module) or by CONFI-INSTRUMENT-B12-Q01=x (Recognizing of a defined type of module).

Description how to assemble or exchange a module

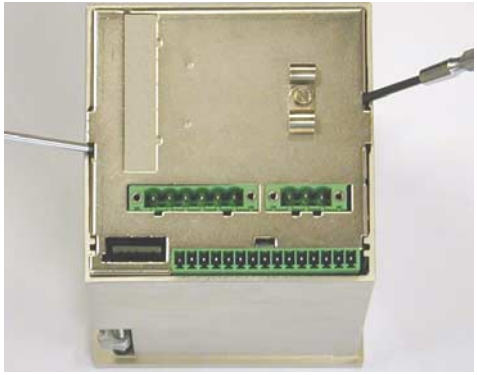

Fig.6-2 Open rear of controller

(R-20270)

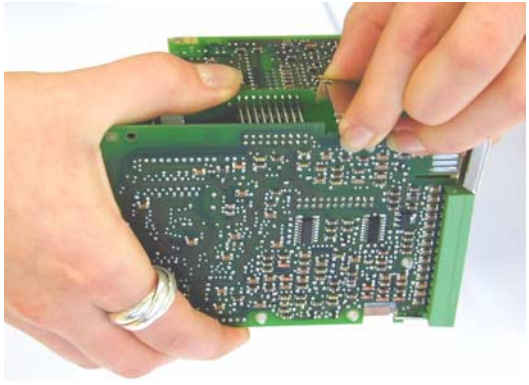

Fig.6-3 Unfix clamp

(R-20271)

1. Unfix rear wall by using two screw drivers according Fig.6-2.

2. Pull rear wall together with CPU- and Power supply-board out of the housing of the controller.

3. To ease the assembly of the module pull the clamp of the rear wall out of the fixture at the electronic boards Fig.6-3.

Note

Please take care that you disassemble all connectors (power supply, standard I/O, relays, module) at the rear wall before doing this. With assembled connectors you cannot unfix the rear wall.

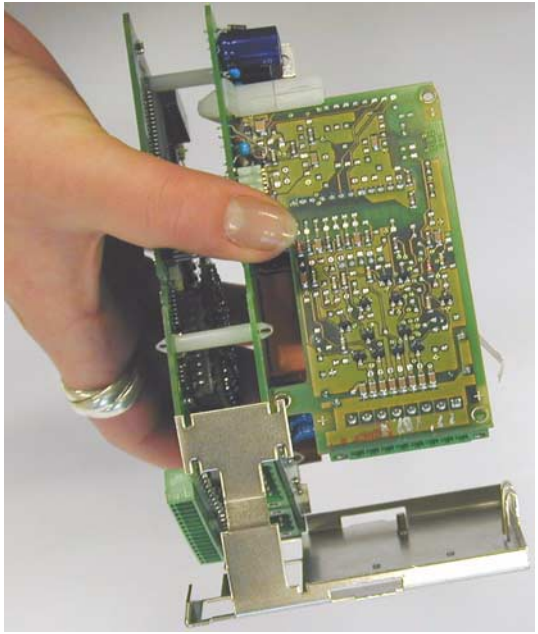

Fig.6-4 Unfixed clamp
(R-20273)

4. See in the Fig.6-4 the controller with unfixed rear wall.
Assembled in the rear wall you will find a small cover plate which is used to cover (no module assembled) or shape the hole in the rear wall (module assembled).

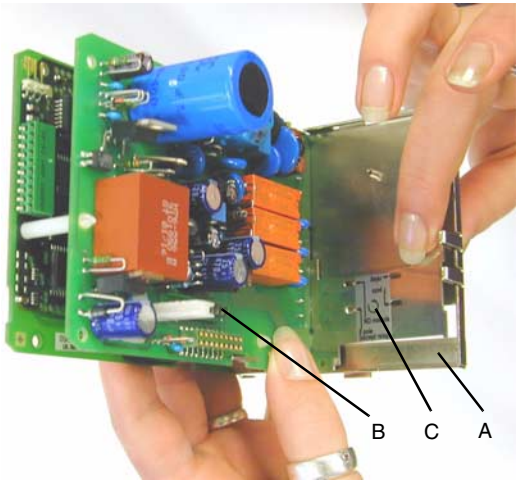

Fig.6-5 (R-20272) Fix cover plate
A Rear wall
B Connector for module
C Cover plate

There are 4 different positions to fix the cover plate in the rear wall.

The position that has to be used is dependent on the type of module:

a) No module (Fig.6-6)
b) Module with 7 pins (Fig.6-7)
c) Module with 8 pins (except relay-module) (Fig.6-8)
d) Relay-module (Fig.6-9)

Fix the cover plate in the suitable position (dependent on the type of module).

5. Set the module into the guide rail of the housing and push the module completely into the connector on the electronic board (B).

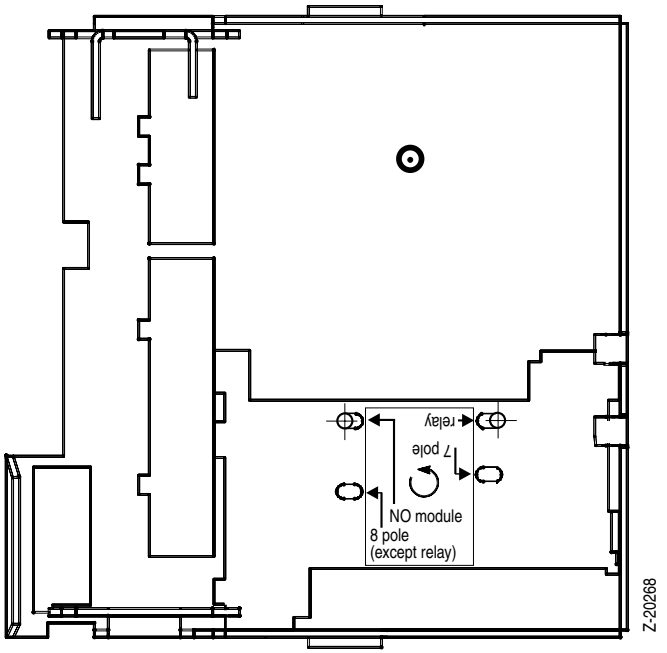

Fig.6-6 No module

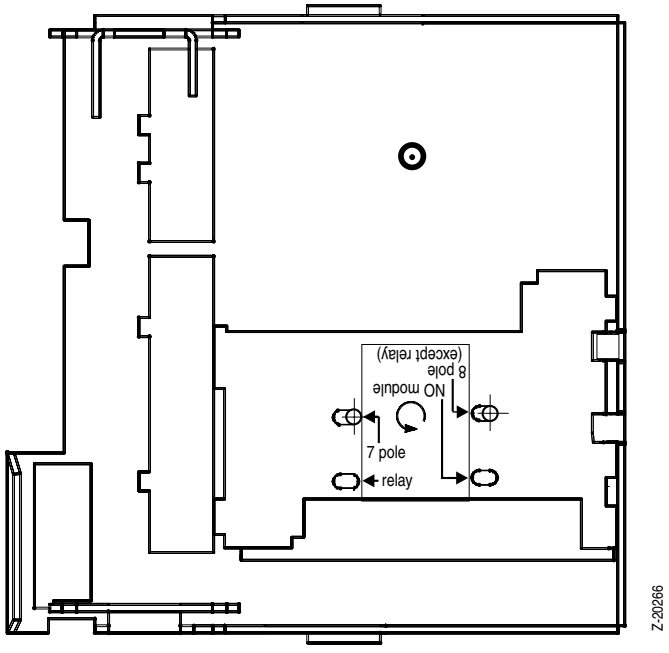

Fig.6-7 Module with 7 pins

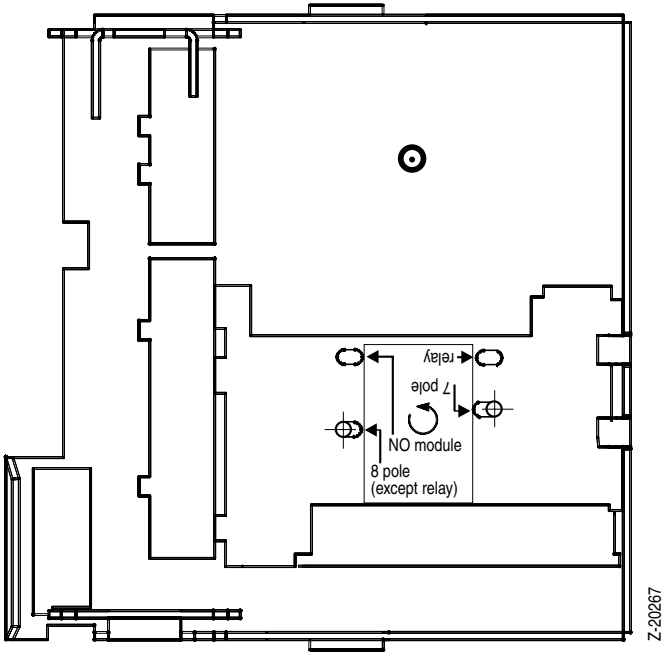

Fig.6-8 Module with 8 pins (except relay-module)

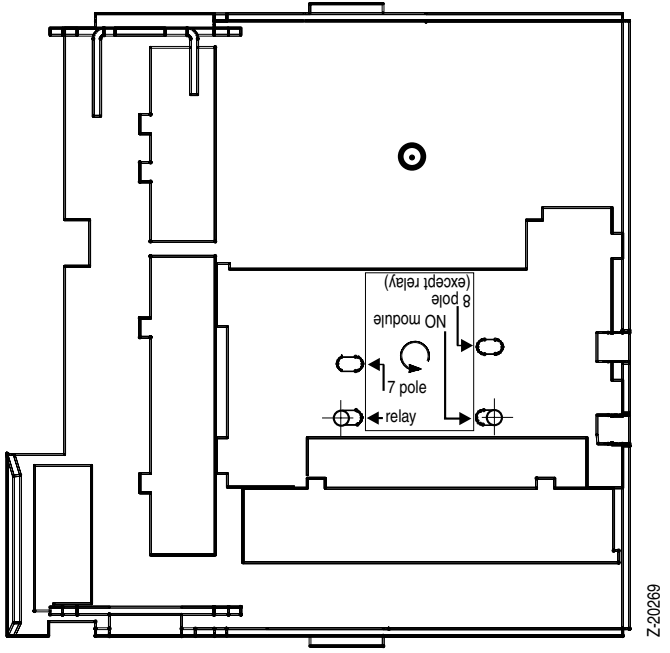

Fig.6-9 Relay module

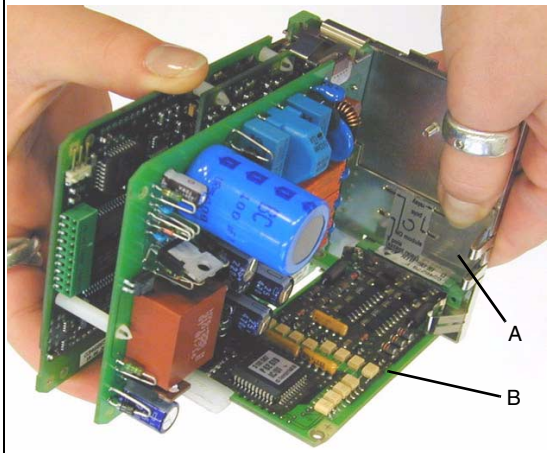

Fig.6-10 (R-20274)
Rear wall fixed
A Fixed rear wall with cover plate
B assembled module

6. Connect clamp of the rear wall into the electronic boards.

7. Push the rear wall with electronic boards slowly into the housing until the rear wall snaps into the final position in the housing.

If you want to exchange a module you have to proceed accordingly.

Note

If you assemble a Modbus-module (RS 232 or RS 485) or a Profibus-DP-module, you have to connect the shield of the cable with the cable clamp to the rear wall of the controller.

6.3 Modifying modules

Analog input module 2 × mA or thermocouple / mV

2 inputs, 0/4...20 mA, or thermocouple and mV (-10...80 mV) with opto isolation.

Each of the two inputs can be configured for 0/4...20 mA or thermocouple /mV by setting the jumper accordingly.

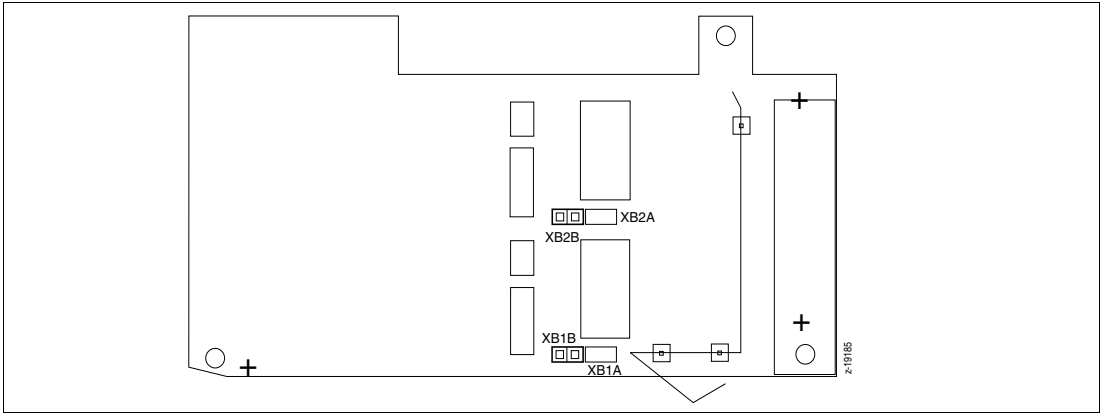

Fig.6-11 Analog input module 2 × mA or thermocouple / mV

z-19185

	Input 1:		Input 2:
mA	XB1A bridged	mA	XB2A bridged
mV	XB1B bridged	mV	XB2B bridged

6.4 Adding input AI02

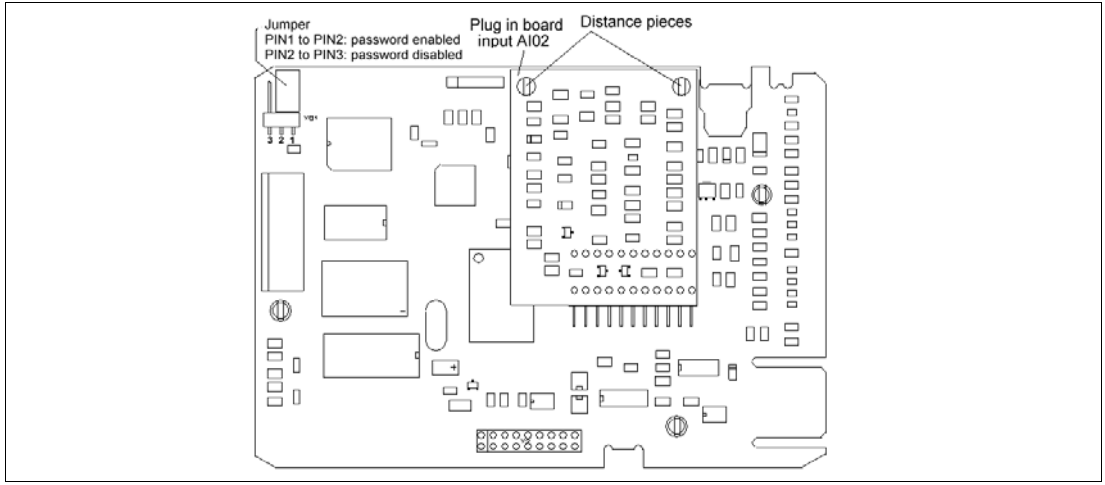

Fig.6-12 Main board with piggyback board AI02

If required, the optional universal input AI02 can be added at a later time and connected to the main board as piggyback board. Disconnect the controller from power, dismount it, and then open it to access the boards.

6.5 Disabling the password

1. Switch off power.
2. Dismount and open the device.

If the jumper is set in such a way that it links pin 1 and pin 2, the set password is active and valid. If the jumper is set to pins 2 and 3, the set password will be ignored.

3. Set the jumper accordingly (see Fig.6-12).
4. Close and mount the device.
5. Switch on power.

The password-protected menu levels are now freely accessible.

6. Read and, if applicable, change the password (see Section 13.1.2).
7. Repeat steps 1 and 2 and then set the jumper back to its initial position.

6.6 Updating the firmware

Please contact ABB Service if you need a firmware update. ABB Service will then download the new firmware revision via the optional RS 232 module.

7 Operation

7.1 Operating elements on the Digitric 100 front panel

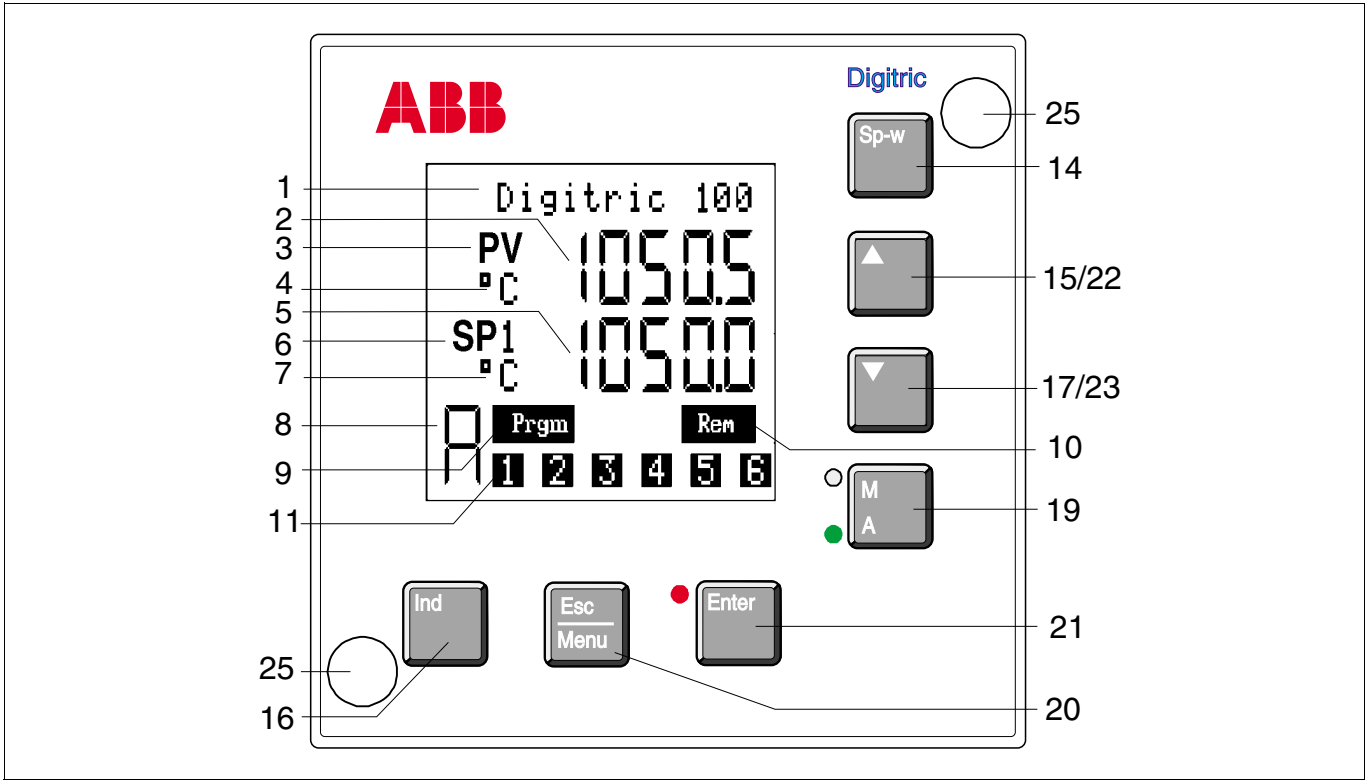

Fig. 7-1 Operating elements on the Digitric 100 front panel
(description see next page)

Description for Fig. 7-1

1	Text line
2	Digital indicator for process value PV
3	Designation of the process value
4	Dimension of the process value
5	Digital indicator: indicates setpoint SP in automatic mode and output value OUT in manual mode
6	Designation of the value indicated in 5
7	Dimension of the value indicated in 5
8	Alarm indicator
9	Indicator for programmer activity
10	Remote control indicator
11	Freely configurable binary messages (6 binary flags)
14	Setpoint changeover (see Section 7.6 “Setpoints“)
15	Button for incrementing the values indicated in 5, 6 and 7
16	Toggle switch for indicators 5, 6 and 7
17	Button for decrementing the values indicated in 5, 6 and 7
19	Mode switch for selecting manual or automatic mode, with indicator LEDs
20	Button for accessing the configuration or parameterization level
21	Button for alarm acknowledgement and confirmation of data (configuration and parameters)
22	Up button for incrementing in manual mode
23	Down button for decrementing in manual mode
25	Cap for covering fastening elements for panel mounting

7.2 LC Display

The values seen in the “2nd line“ column of the table below can be accessed in two different ways: 1. From left to right: Press <Ind> button (several times). 2. From right to left: Press and hold <Ind> button	

Input circuit/ function		1st line	2nd line Controller								Programmer	
Fixed value		PV	SP1-SP4		Sxt	SPC	P0x	–	Err	OUT	ALi	PS	PGt
Multi components		PV	SP1-SP4		Sxt	SPC	P0x	–	Err	OUT	ALi		
Multiplication		PV	SP1-SP4		Sxt	SPC	P0x	–	Err	OUT	ALi		
Ratio (RPV, SR)		RPV	SR1-SR3		Rxt	SRC	P0x	SR	Err	OUT	ALi		
Ratio (PV, SR*IC2)		PV	SR1-SR3		Rxt	SRC	P0x	SR	Err	OUT	ALi		
Fixed value/Ratio (RPV, SR)	FV	RPV	SP1	SR1-SR3	Rxt	SRC	P0x	SR	Err	OUT	ALi		
	Ratio	RPV	SP1	SR1-SR3	Rxt	SRC	P0x	SR	Err	OUT	ALi		
Fixed value/ratio (PV, SR*IC2)	FV	PV	SP1	SR1-SR3	Rxt	SRC	P0x	SR	Err	OUT	ALi		
	Ratio	PV	SP1	SR1-SR3	Rxt	SRC	P0x	SR	Err	OUT	ALi		
Extreme value (max, min, PV, SP)		PV	SP1-SP4		Sxt	SPC	P0x	–	Err	OUT	ALi		
Load control - air		same as ratio											
Load control - fuel		same as fixed value											
Manual station		PV	–		–	–	–	–	–	OUT	ALi	–	–
Setpoint station		–	SP1-SP4		Sxt	SPC	P0x	–	–	–	–	PS	Pt
Ratio station		PV	SR1-SR3		Rxt	SRC	P0x	SR					
Positioner		PV=OUTfb	SP1-SP4		Sxt	SPC	P0x	–	Err	OUT	ALi		
Alarm station		PV	(SP1-SP4)		(Sxt)	(SPC)	(P0x)	–	(Err)		ALi	PS	Pt

Table 7-1 Grayed indicators flash. These values are only displayed, but are currently not active.

PV	Measured value (with ratio control: measured value in the quotient numerator)
SP1-SP4	Setpoints 1 to 4
SR1 - SR3	Ratio setpoints 1 -3
Sxt, Rxt	External setpoint
SPC, SRC	Computer setpoint
P0x	Programmer setpoint (indicated as P01 to P10)
IC2	With ratio control: measured value in the quotation denominator

Setpoints are only indicated when they are enabled in the configuration.

(continued on the next page)

Description for Fig. 7-1, continued from previous page:

SR	Setpoint active during ratio control (R* IC2) or (R*IC2)/(1-R)
Err	Control deviation
OUT	Controller output or position feedback
ALi	Alarm limits AL1 to AL4, if enabled

Programmer:

PS	Currently executed program segment PS
Pt	Program run time since startup

7.3 Alarm handling

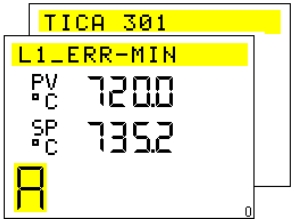

Fig.7-2 Alarm message
z-19000

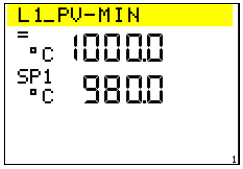

Fig.7-3 Alarm value is set to 100.0
z-19001

When an alarm or error occurs or an alarm value is exceeded during an operating cycle,
– a flashing “A“ appears in the bottom right corner of the display,
– the error or alarm source is indicated in the first line of the display instead of the TAG name,
– the <Enter> LED is lighted.

Note
Unconfirmed operating instructions displayed in the text line have priority over error codes. As long as the operating instruction is still unconfirmed, the alarm is only indicated by the flashing “A“. Alarm acknowledgement is not possible in this situation!

Displaying the exceeded alarm value
Press <Ind> to display the alarm value.

Acknowledging the alarm
press <Enter> (standard configuration):

If there is no other alarm:
The display is reset and the normal values are indicated.

The LED is extinguished, whether the alarm is still active or not.

If there are other alarms
More alarms are indicated in the same way as described above and have to be acknowledged individually.

7.4 Automatic mode (A)

Possible operator actions

When the controller is switched over from manual to automatic mode, the active setpoint is seen on the digital indicator. Other values can be selected by pressing the <Ind> button.

<M/A>	Switch over from manual to automatic mode
<SP-w>	Switch over the setpoint (if configured)
<▼> <▲>	Increment/decrement the setpoint
<Menu>	Switch over to another menu level

7.5 Manual mode (M)

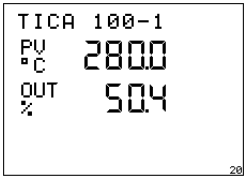

Fig.7-4 Output OUT is indicated
z-19020

The functions of the < ▲> and <▼> buttons are defined either through configuration or, in case of the step controller, through the appropriate wiring. Usually, a more critical state - e.g. a higher furnace temperature - is reached by pressing the < ▲> button.

After the controller has been changed over from automatic to manual mode, the output variable OUT is shown by the digital indicator. Other values can be selected by pressing the <Ind> button.

In the case of controllers with double output (split range or heating-off-cooling) the display 0...100% corresponds to the full output range of both outputs.

Example:
Heating-off-cooling (with normal characteristic curve)
OUT = 0 % corresponds to 100 % cooling
OUT = 50 % corresponds to 0 % cooling and 0 % heating
OUT = 100 % corresponds to 100 % heating

Possible operator actions

< ▲> <▼>	OUT indicator: change the output signal Press and hold <Enter>, additionally press <▼>: control output jumps to end value -5 % Press and hold <Enter>, additionally press < ▲>: control output jumps to end value +105 %
<▼> < ▲>	SP indicator: increment/decrement the setpoint
<M/A>	Switch over from manual to automatic mode
<SP-w>	Switch over the setpoint (if configured)
<Menu>	Select another menu level

7.6 Setpoints

The <SP-w> button can be used to toggle between several setpoint sources, provided that the controller has been configured accordingly.

Possible setpoint sources are:
– setpoints SP1 to SP4 (SR1 to SR3) that can be selected on the device by pressing the < ▲> or <▼> button or
– an external setpoint Sxt (Rxt) via analog input
  or
– a computer setpoint SPC (SRC) via serial interface
  or
– a programmer with 10 programs P01 to P10

Display in field /6/:

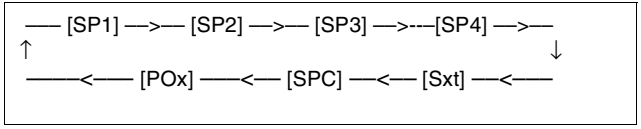

for ratio control

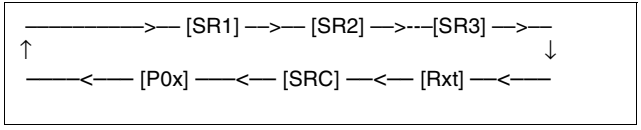

Unconfigured setpoints are suppressed.

Pressing the <SP-w> button will call up the current setpoint for display by the digital indicator, independent of the number of available setpoints.

The setpoint is indicated immediately, but first flashes and becomes active with a delay of 3 seconds. This means that only the last setpoint selected becomes active when the setpoints are switched over quickly.

7.7 Ratio controller

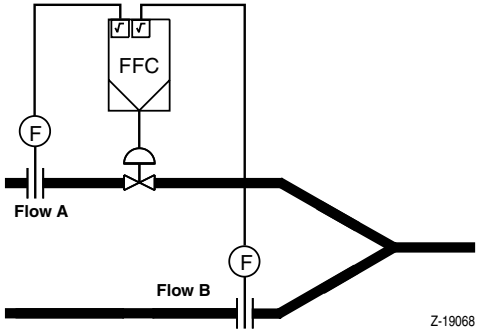

Fig.7-5 Ratio control

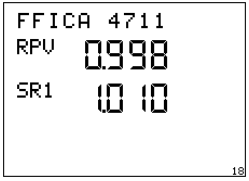

Fig.7-6 Display RPV and SR1,
z-19018 SR1 is adjustable

The ratio controller controls

$$RPV(\text{ratio process value}) = SR(\text{set ratio}) = \frac{FlowA}{FlowB}$$

or, depending on the configuration,

$$RPV = SR = \frac{FlowA}{FlowA + FlowB}$$

The ratio controller can output the actual ratio to an analog output (0/4...20 mA) if configured accordingly.

When the RPV and SR displays are configured, the ratio setpoint is indicated in the fields /5/, /6/ and /7/ of the digital indicator and can be set.

If configured accordingly, several setpoint sources (SR1 to SR3, Rexternal or program generator) can be selected by pressing the <SP-w> button.
The measured actual ratio is indicated in the fields /2/, /3/ and /4/.

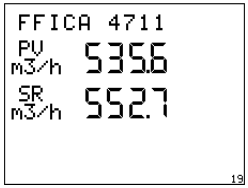

Fig.7-7 Process value PV = flow A and SP = setpoint flow A

z-19019

When the PV and SP displays are configured, the calculated setpoint of flow A is indicated in the fields /5/, /6/ and /7/. The fields /2/, /3/, /4/ indicate the measured actual value of flow A.

Fig.7-8 SR1 is adjustable

z-190051

Press the <Ind> button to call up the SR1value in the display fields (/5/, /6/, /7/) and then change it.

7.8 Programmer

A programmer can be configured in the controller. Up to 10 different programs with 15 segments each can be saved. Refer to Section 12, Configuration for details about setting the values.

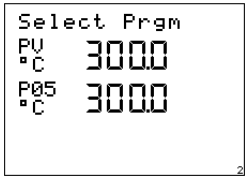

Fig.7-9 z-19002 Program has been selected, but not yet started

7.8.1 Selecting the program

If the programmer is configured, the [Pxy] display can be selected by pressing the <SP-w> button. The flashing Pxy display indicates the number of the currently selected program.

Press < ▲> or <▼> to toggle between up to 10 saved programs (P01 to P10).

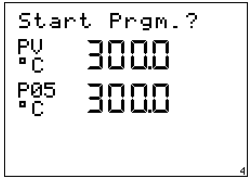

Fig.7-10 z-19004 Start?

7.8.2 Starting the program

Once the Pxy display has stopped flashing, the program can be started by pressing the <Enter> button. The question if the program is to be started appears for 3 second in the text line. Confirm with <Enter>. The question mark is replaced with an exclamation mark for a few seconds. If the selection is not confirmed with <Enter> within 3 seconds, the selection is ignored and program selection is enabled again.

Fig.7-11 Displaying the current program setpoint 300.0 °C
z-19006

Fig.7-12 Program is in the 11th segment
z-19007

Fig.7-13 Program run time so far 2h:17min:02s
z-19008

7.8.3 Displays during program execution

Press the <Ind> button to switch over the display, either while the program is being executed or after it has stopped. Besides the current setpoint the following items can be indicated:

– Program segment
– Program run time

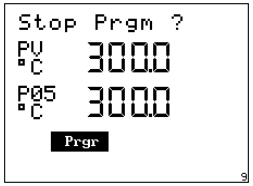

Fig.7-14 Question: Stop program?
z-19009

Fig.7-15 Programmer has stopped
z-19011 Program (Prgm) is flashing

7.8.4 Stopping the program

When the <Enter> button is pressed again once the program is running, the question for the system stop seen here appears.

When the question is answered with yes by pressing the <Enter> button, a confirmation is shown for 3 seconds.

The program is stopped, and the [Prgm] indicator flashes. The question mark is replaced with an exclamation mark for a short time to confirm.

Fig.7-16 Fast forward indication
z-19012

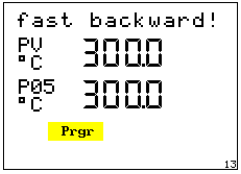

Fig.7-17 Fast backward indication
z-19013

7.8.5 Fast forward/backward

When a program has been stopped, a fast forward/backward run can be achieved by pressing the < ▲> or <▼> button. Actuating the < ▲> button will shift the program forward to values later in time. When this button is pressed, the fast forward action is confirmed in the display.

How far the program has run forward can be derived from the set-point, the segment indicator or the time indicator.

A fast backward run of the program can be started by pressing the <▼> button.

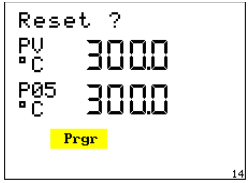

Fig.7-18 Question: Reset?
z19014

Fig.7-19 During running program switching to other setpoints is not possible
z19-016

7.8.6 Resetting (cancelling) the program

If a program is restarted after it has been run down completely, it starts automatically in the 1st segment. No reset is required in this case.

A stopped program ca be reset or cancelled by pressing the <SP-w> button.

If the question is answered with yes by pressing the <Enter> button within 3 seconds, the program is reset to the start. The message “Reset!“ appears for a short time.

If the operator attempts to switch during a running program to another setpoint (e.g. SP1) by actuating the <SP-w> button, the warning “Program runs“ appears in the display for 3 seconds, see Fig.7-19.

7.9 DDC control

With DDC control a supervisory computer provides for control. In case of a computer failure the Digitric controller bumplessly takes over control.

Possible operating modes

● LED is off
⊙ LED is flashing with 0.5 to 1 Hz
⊗ LED is flashing with 2 Hz
☼ LED is on
CR The computer is ready, i.e. there is regular data traffic via the serial interface.
M, A LEDsto the side of button 19 on the front panel (Fig. 7-1)

DDC configuration with manual backup mode

Operating mode	LED M	LED A	CR
Manual	☼	●	0
Automatic	●	☼	0
DDC	disabled		0
Manual	☼	●	1
Automatic	●	☼	1
DDC	☼	☼	1
Backup mode			
M-backup	☼	⊗	0
M-backup	☼	⊙	1

DDC configuration with automatic backup mode

Operating mode	LED M	LED A	CR
Manual	☼	●	0
Automatic	●	☼	0
DDC	disabled		0
Manual	☼	●	1
Automatic	●	☼	1
DDC	☼	☼	1
Backup mode			
M-backup	⊗	☼	0
M-backup	⊙	☼	1

No computer ready signal (CR = 0)
As long as no computer ready (CR) signal is available, the controller cannot be switched to DDC mode.

Computer ready (CR = 1)
The changeover to DDC operation is enabled. In “manual“ mode LED A flashes with low frequency. In “automatic“ backup mode LED M flashes with low frequency.

It is possible to switch from DDC operation to manual or automatic mode at any time.

Computer not ready
If the CR signal is not received any longer, the controller takes over control in the configured mode.
In backup mode "manual" LED A flashes with increased frequency.
In backup mode "automatic" LED M flashes with increased frequency.
It is not possible to switch over to another mode (non-DDC).
The LED of the disabled mode flashes. The LED of the active mode is lighted permanently.

7.10 Stations

7.10.1 Manual station

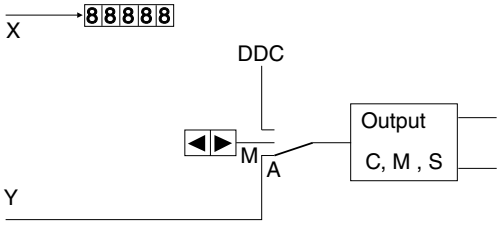

Manual-automatic station

Fig.7-20 (z-19026)

Operating mode	LED M	LED A	CR
Manual	☼	●	0
DDC	disabled		0
Manual	☼	●	1
DDC	☼	●	1
Backup mode			
M-backup	☼	●	0
M-backup	☼	●	1

The manual station is a controller that can be used in “manual“ mode only.
All indicators that can be selected by pressing <Ind> do not display setpoints or the control deviation in this mode. The PV indicator can indicate a measured value which can be monitored for limit values.
The operation of the manual station depends on the respective configuration.

Manual station
With the manual station the control output can be set manually. All output types of the controller are possible.

Manual/automatic station (not step controller)
In automatic mode, this station applies an externally fed **continuous** signal to the output. It is possible to switch over to manual mode and set the output manually.
No step output is possible.

DDC manual station (no step controller)
The DDC manual station combines the functionality of the manual station with the manual function of the DDC controller.

7.10.2 Setpoint station

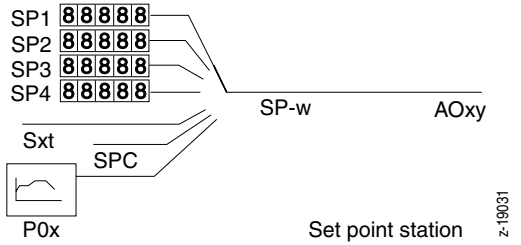

Fig.7-21

The setpoint station generates setpoints and outputs them as 0/4...20 mA signal.

All indicators for the process value or control deviation are disabled.

The button <Sp-w> can be used to switch between different setpoint sources and the program generator, if configured.

7.10.3 Ratio station

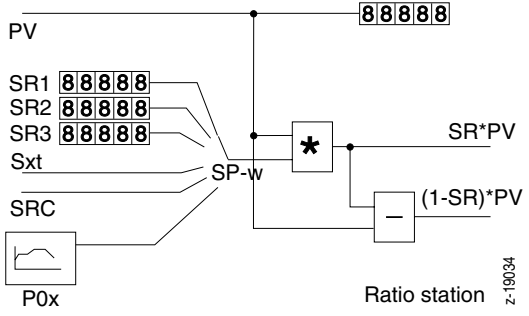

Fig.7-22 (z-19034)

The ratio station multiplies an input signal with a setable ratio factor SR. The input signal is treated as a measured value. Limit values may be set.

The signal (SR * input) is available as output signal.

7.10.4 Positioner

The positioner is a motorized valve controller (step controller) which tracks the actuator position (valve position) to an external setpoint. This task requires position feedback. The returned position is indicated on the controller as the process value PV and the position feedback OUT.

7.11 Remote control (Profibus or Modbus)

Only remote control Fig.7-23 Remote control is active z-19035	The [Rem] indicator is active. The control buttons on the controller front panel are disabled, with some exceptions. **Possible operator actions** <Ind> Permits to switch over the display <Menu> Accesses the configuration menu, among other reasons to start remote control. Press <Menu> to switch to the menu level from which remote control can be disabled.

8 Error information on the display

Operating notes	Meaning	Configuration
locked by BI	Access to parameterization, configuration, service, and supervisor level is blocked through a binary input.	I-B02-Q01 I-B02-Q02
generate	After configuration the instrument is busy with the program generation.	
locked for ST	Self-tuning is blocked for this control loop. It can only be released via the configuration.	L1- B01-Q05
no adj. possible	The selected input has not been activated for the type intended for the adjustment (e. g. no Pt100 input). This message is displayed for mA position feedback or remote transmitters fed with constant current, if the difference between start and end value is smaller than 10%.	
no adjustment	The configured module does not permit an adjustment respectively does not require an adjustment.	
local only	The instrument has only been configured for local operation. It cannot be switched to exclusive remote operation.	I-B04-Q01
remote only	The instrument has been configured for remote operation. For local operation it must be enabled via menu “Operate 2” or via the configuration.	I-B04-Q01

Table 8-1 Error information

Error message	Cause	Remedy
Error xxxx	An error occurred while processing the program. The number is intended as help for the service.	If this message does not disappear within a few seconds you can try to initiate a restart by switching off the supply voltage for approximately 60 s. If the error persists, the factory settings must be restored via the “supervisor” menu or the configuration must be reloaded via IBIS_*R* .
IP stopped!	Processing has been temporarily stopped. This error occurs during downloading.	If this message does not disappear within a few seconds after downloading you can try to initiate a restart by switching off the supply voltage for approximately 60 s. If the error persists, the factory settings must be restored via the “supervisor” menu or the configuration must be reloaded via IBIS-*R+* .
Slot 1!	When downloading a configuration the configuration request a module that is located in the instrument.	Insert the correct module in slot 1 and register the module (I-B11-Q01 = 1).
invalid resp.	The response entered may be incompatible with other existing settings. Enter is activated together with this message.	Get the invalid response on the display with <Enter> and change it.

Table 8-2 Error information

9 Menu structure

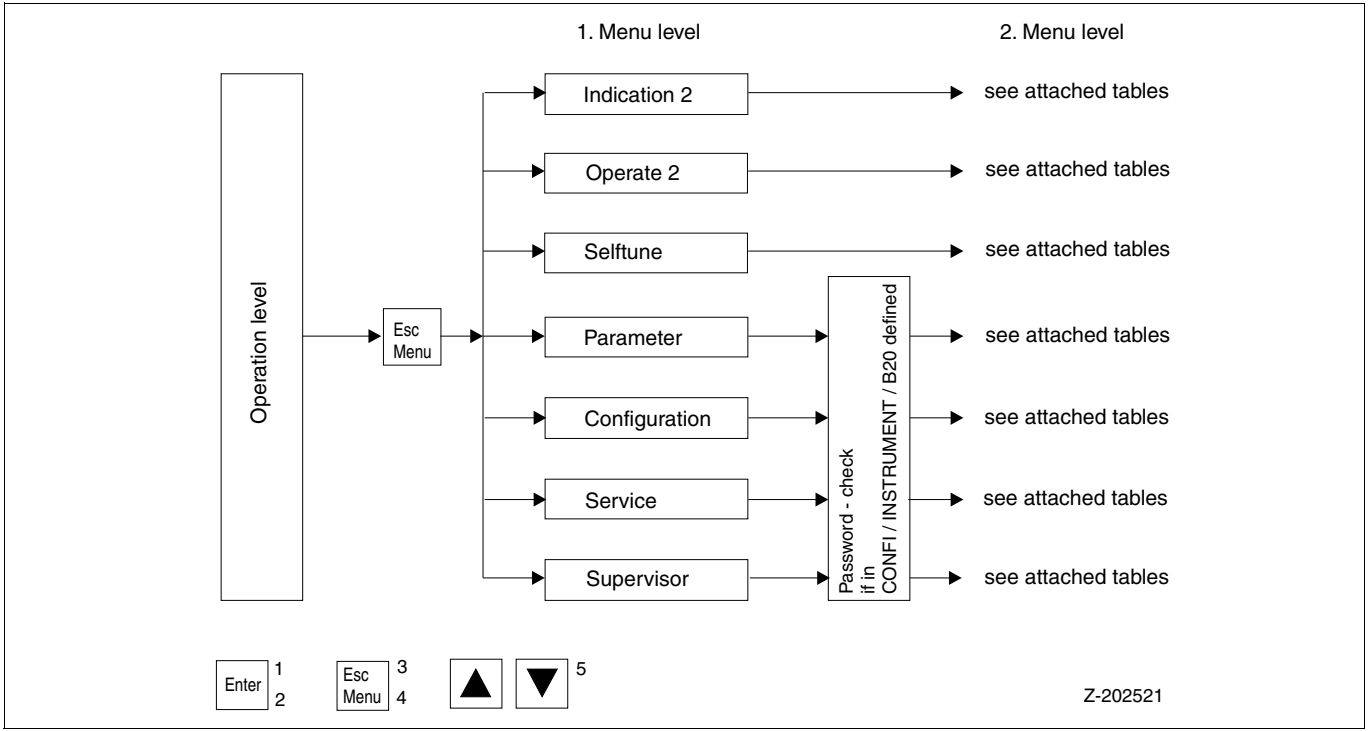

Fig. 9-1 Menu structure
1 Confirm selection, go down one menu level
2 Change or confirm input, go down one menu level
3 Go up one menu level without change(press 3 s → main operating level)
4 From main operating level to menu
5 Move sideways within one menu level

Indication 2
In this menu you can view all parameters, measuring values, and settings of the controller, but you cannot change them (see also tables and section 9.1).

Operate 2
In this menu you can toggle between local and remote operation.
(See also tables and section 9.2)

Selftune
Self-tuning is enabled in the configuration menu under
CONFI / LOOP1 / B01 / Q05
After enabling it can be used without knowing a password
(see also tables and section 11.4).

Parameter
This menu contains the settings of the parameters required for the configured functionality. During parameterization the control action stays on (see also tables and section 11).

Configuration
This menu contains sub-menus for instrument function definition (e. g. actuator output type).
During configuration the control action is switched off (actuator outputs are frozen). (See also tables and section 12.)

Service
This menu contains sub-menus for calibration, Adjustment, etc. (see also tables).
Calibration is only required in exceptional cases. If it is not executed in an expert manner, the instrument is rendered unusable (see also tables and Section 14, Service).

Supervisor
This menu contains the sub-menus: Master reset, Plausibility, and Template (see also tables and Section 15, Supervisor).

9.1 Indication 2

9.1.1 Parameter display

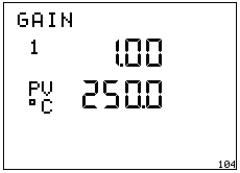

Fig.9-2 Parameter display
z-19104

In this menu you can display all parameters of the instrument.

Parameter changes can only be performed via the password-protected parameterization menu.

9.1.2 Inputs/outputs

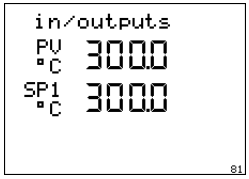

Fig.9-3 -19081 Start menu for displaying inputs and outputs

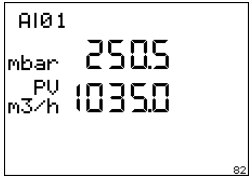

Fig.9-4 z-19082 Analog input AI01 = 250.5 mbar

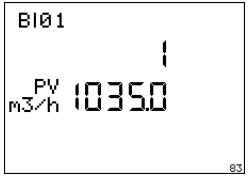

Fig.9-5 z-19083 Binary input BI01 = 1

In this menu you can display all binary and analog inputs and outputs used in the application.

Press <Enter> to switch to the next menu level.

The value of analog input AI01 is displayed in the first line of the selected scale.

The bottom line shows the PV. In simple control tasks with only one measuring value both values are identical, possibly with different decimal point position.

Press < ▲> and <▼> to select the desired input or output.

Currently, binary input BI01 has the value logical “1”.

9.1.3 Effective PID parameter

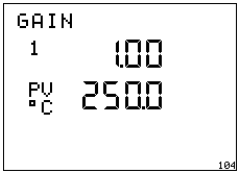

Fig.9-6 PID parameter display
z-19104

In this menu you can display the effective PID parameters of the instrument.

Parameter changes can only be performed via the password-protected parameterization menu.

9.1.4 Identification

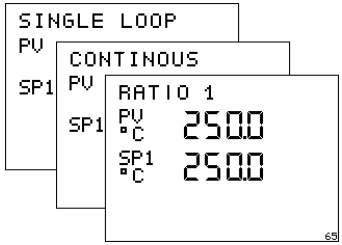

Fig.9-7 The display shows an example of the
z-19065 information when called from Loop 1.

Selecting menu option ”Identification“ displays the function of the selected control loop.

9.1.5 Library identification

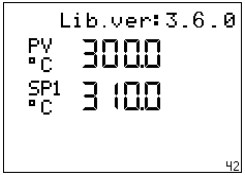

Fig.9-8 Library identification
z-19080

The configuration is based on library 3.6.0. This information is only relevant for processing the configuration with IBIS-R+.

9.1.6 Version display

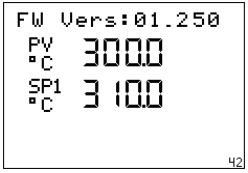

Fig.9-9 The firmware (instrument software) has the index 01.250
z-19042

This is the firmware version used in the instrument itself. It may be required to know this version number when using the IBIS-R PC software.

9.2 Operate 2

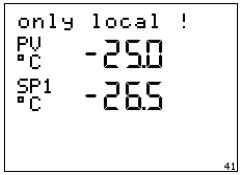

Fig.9-10 Not intended for remote operation
z-19041

If the instrument has been configured exclusively for remote operation, the remote operation can be disabled temporarily – e. g. for emergency intervention – via menu “Operate 2”.

Depending on the configuration the following display appears when selecting the menu option:

Not intended for remote operation
The operation cannot be changed.

Note
Remote operation means that values are input to the instrument via Modbus RTU respectively PROFIBUS DP.

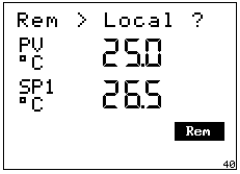

Fig.9-11 Remote operation is activated
z-19040

Remote operation is activated
Remote operation “Rem” can be toggled to local operation.
The question “Toggle to local operation?“
= "Rem>Local?" is confirmed with <Enter> or negated with <Esc>.

If the instrument is toggled to local operation the keys are enabled and [Rem] starts flashing.

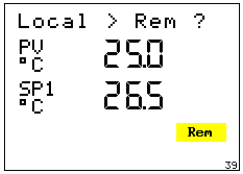

Fig.9-12 Remote operation is deactivated
z-19039

Remote operation is deactivated
Remote operation is – temporarily – switched off. Press <Enter> to restore the operating condition “Remote operation” as defined by the configuration. Then, the instrument can only be remote-operated.
[Rem] stops flashing.

10 Password protection

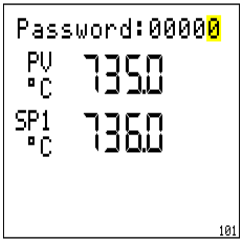

Fig.10-1 Input of password. 1st field from the right
z-19101

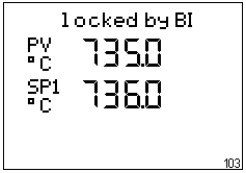

Fig.10-2 Locking the parameterization and configuration level via binary input
z-19103

If the password protection has been configured (I-B20), you must enter a password to access the protected levels, by changing the predefined value “00000”.

The password is a 5-digit number.

1. Shift a flashing (changeable) field:
   <Ind>
2. Change digit:
   < ▲> and <▼>
3. Confirm password:
   <Enter>

When the password is correct, the desired level is entered. You can now switch between all levels of the menu system without having to re-enter the password (Question: I-B20-Q01).

If the password is not correct, the main operating level is displayed again.

If a hardware lock has been configured (I-B02-Q01) and the binary input is set, the message “locked by BI” is displayed when attempting to open a protected level.

The message is displayed for 3 s, then the operating level is automatically switched back.

Cancelling the password input

Cancel with <Esc>

Forgotten password
If a password is no longer known, the password can be reset by temporarily rearranging a jumper within the instrument. For this action the control loop must be switched off. For further information refer to section 6.5.

11 Parameterization

During parameterization the instrument in online, i. e. all functions are in operation.

During parameterization the instrument should be set to manual, since the parameter changes could interfere with the automatic operation.

11.1 Parameterization menu

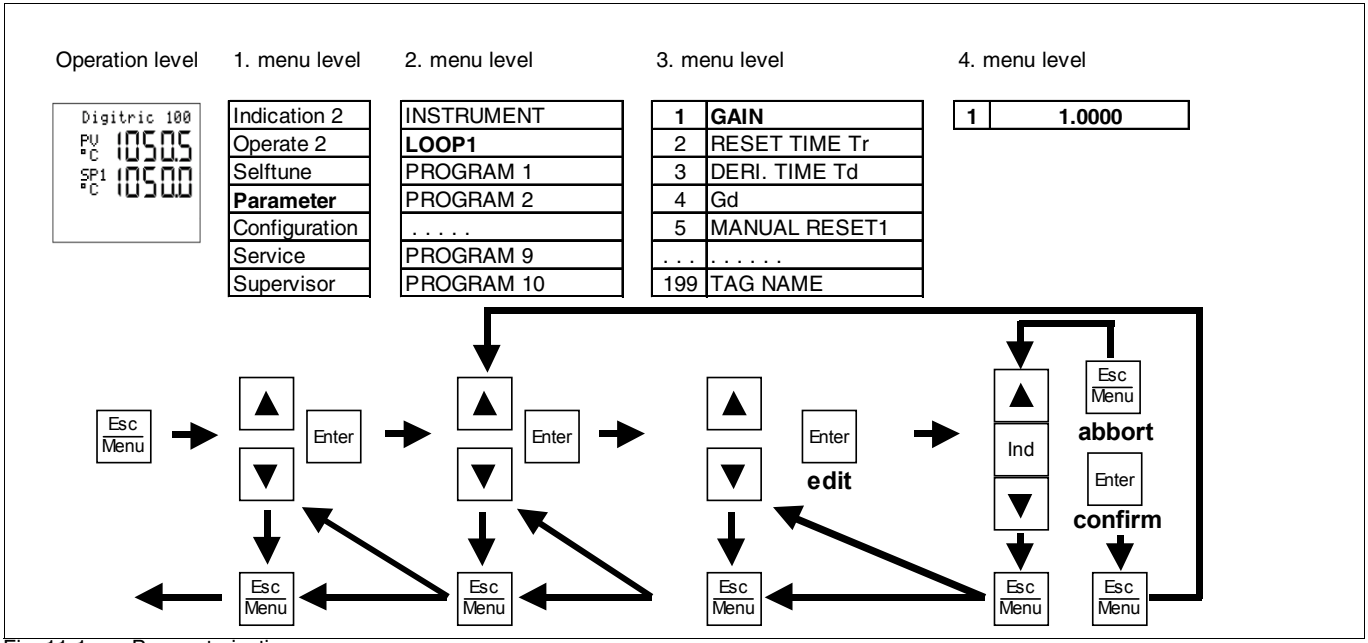

Fig. 11-1 Parameterization menu

11.2 Selecting and changing parameters

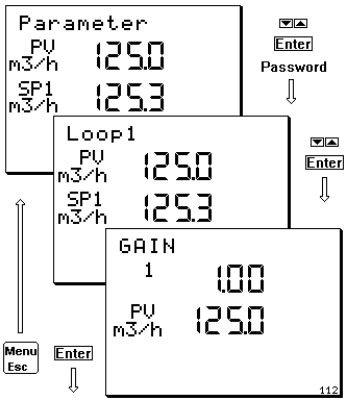

Fig.11-2 Selecting parameters
z-19112

Fig.11-3 Gain selected for changing
z-19104

(Menu ●)

1. Go to parameterization menu:
   <Menu>
2. If required, enter password (procedure according to items 4 through 8):

(Menu)

3. Select parameter:
   < ▲> and <▼>
4. Enable parameter change:
   <Enter>

(Enter ❂)

A parameter position flashes.

5. Change the flashing position:
   <Ind>
6. Shift the decimal point:
   Press and hold <Ind>
7. Change value:
   < ▲> and <▼>
8. Accept changed parameter (including decimal point change):
   <Enter>
   or
   Discard changes:
   <Esc>

Enter ●.

11.3 Parameter categories

The parameter tables in these instructions (Section 11, Parameterization) have the following headings:

Instrument	all parameters valid for the entire instrument.
Loop 1	parameters specific for a control loop.
Program 1-10	Programs 1 through 10 for the programmer

(refer to section “programmer”).

11.3.1 Instrument parameterization

The parameterization for the instrument consists of the four linearization tables. The dimension (EU) depends on the configured application. It is not shown in the tables.

The tables can only be parameterized if the tables are linked into the configuration (e. g. AI-Bx-Q02).

11.3.2 Loop 1 parameterization

PID parameters (L1-P01 through L1-P19) and possibly L1-P25 through L1-P29

For a standard PID controller, only these parameters are accessible

Control output OUT1		**Control output OUT2 (e. g. “Cooling”)**	
01	Gain	25	Gain 2
02	Reset time Tr (only if integral part present)	26	Reset time 2 Tr
03	Derivative time Td (only if derivative part present)	27	Derivative time 2 Td
03	Derivative gain Gd (only if derivative part present)	28	Derivative gain 2 Gd
05	Manual reset MR (if no integral part present)	29	Manual reset 2 MR

The OUT2 parameters are valid for a 2nd control output (heating-off-cooling or split-range, if available).

If a parameter control has been configured (L1-B02-Q7...Q18), the required parameters from range P06 through P21 (OUT1) resp. P30 through P37 (OUT2) are in effect and visible on the display. The values currently in effect are also shown in P01 through P05 in menu option “Indication 2”/“Actual PID parameters” if parameter control (Gain scheduling) is active.

For parameter changeover, a binary input is used to toggle between start and end value of the values (P06 through P21 for OUT1, P30 through P37 for OUT2) parameterized for parameter control.

Self-tune L1-P125 - L1-P128
Using parameters P125 through P128 you can define limits for self-tuning, in order to guarantee that illegal operating situations cannot occur.

Control output (parameters L1-P55 through L1-P72)
Parameters P55 through P72 are only visible if the corresponding output function has been configured (L1-B01-Q02).

Control signal limits (P67 through P70) are always available. The factory setting render them ineffective.

The safety values P71, P72 depend on the configuration (L1-B07-Q03, Q05, Q06, and L1-B10-Q03, Q05).

Setpoint values (parameters L1-P75 through L2-P84)
Parameters P75 through P80 define the limits for the setpoint values and their change rate. The factory settings of parameters P77 through P80 render them ineffective.

Parameters P81 through P84 are only visible, if the setpoint values have been configured as parameters. (L1-B05-Q02 ff.)

Alarm values (parameters L1-P91 through L1-P96)
If alarm value has been configured for monitoring the change rate, parameter P96 defines the time period during which the value set by P91 through P95 must not be exceeded as change.

There are only three values possible for P96:
1 = 0:00:01 h = 1 second
2 = 0:01:00 h = 1 minute
3 = 1:00:00 h = 1 hour

Example:
Alarm value 1 is supposed to switch at a change rate of more than 15°C/min:

AL1	L1-B08-Q01 = 11	(AL1: function dPV/dt)
	L1-P96 = 2	min
	L1-P91 = 15	15 (°C, if SP in °C)

Input evaluations (parameters L1-P101 through L1-P104)
These parameters are explained in the description of the input circuits.

Input ratio (parameters L1-P115 through L1-P117)
These parameters are only effective in ratio input circuits. They determine the limits of the ratio setpoint and the bias.

Disturbance feedforward (parameter L1-P120, L1-P121)
These parameters determine the transition function of a differential disturbance feedforward.

TAG name (parameter L1-P199)

Fig.11-4 Parameter 199 “TAG name” selected for changing
z-19105

Parameter 199, the TAG name, is set in the text line (maximum 12 characters).

< ▲> and <▼>	allow the setting of A...Z, a...z, +, ., /, %, _,), (, °, 9...0, space, –
<Enter>	terminates the input and takes over the text input.
<Ind>	moves the input position.

Exit parameterization level
<Menu> jumps one level up in the menu system.
If you press and hold this key longer than 5 seconds, the menu system is exited and you move back to the operation level.

11.4 Self-tune

Notes

Self tuning should only be started, if the process value has been constant for some time. Before starting selftune this can be achieved in manual mode.

For parameterizing a controller with the function HEATING-OFF-COOLING, the temperature of the controlled system must be high enough for cooling to become active, before self-tuning for COOLING can be activated.
Self tuning cannot be performed for motorized valve control (step control) and positioners. (See also tables.)

11.4.1 Procedure

For exciting the controlled process a jump is applied to the controlled process at the beginning of the self-tuning. This jump is taken away after an adjustable duration.
From this jump the controller recognizes the type of controlled process and the first parameters. For controlled process with compensation another jump is applied, in order to calculate the parameters more precisely.

11.4.2 Parameters

Four parameters have been defined for self-tuning in the parameter menu, these parameters must be adapted to the controlled process, if need arises:

Jump L1-P125
This value must be selected in such a way that a detectable change occurs in the controlled process, without the controlled process operating in a critical range. Factory setting: +5.0 %.

Max. jump duration L1-P126
Duration of first jump. The duration should be at least 1/10 of the expected control compensation time Tg. Factory setting: 0.25 min (15 s).

If the duration of the first test jump is long enough to accommodate a complete jump response (in either direction), no further jump will occur, not even for controlled processes with compensation.

Max. pos. control deviation L1-P127
Max. neg. control deviation L1-P128
If the control variable is likely to exceed the defined range, the first actuator pulse is decreased to the initial value.
Factory setting: 99999 EU
If – for controlled processes with compensation – a second jump is applied to the process the controller reduces this second jump in such a way that the limits will no longer be exceeded.

11.4.3 Starting self-tuning

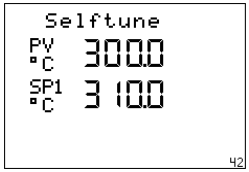

Fig.11-5 Self tuning
z-19043

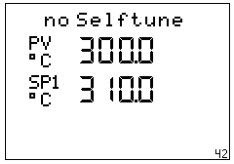

Fig.11-6 Locked for self-tuning
z-19143

Fig.11-7 Start self-tuning?
z-19047

1. Call up self-tuning:
<Menu> < ▼> < ▼>

2. Self-tuning can only be started if it has been enabled in the configuration menu (L1-B01-Q05 > 0)
If self-tuning is locked, the message
“no Selftune” is displayed.

3. After selecting the menu option
“Selftune”,
start self-tuning:
<Enter>

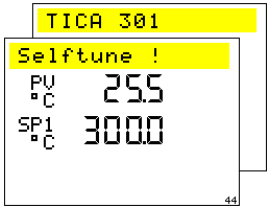

Fig.11-8
z-19044

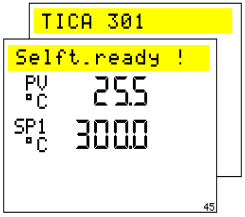

Fig.11-9
z-19045

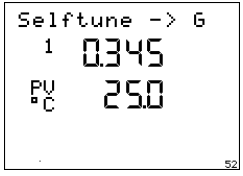

Fig.11-10
z-1952

The display jumps back to the main operating level. Now, loop selection is possible. The display in the text line of the loop with activated self-tuning toggles between TAG name and “Self-tuning”.

Attention

While the parameters are determined, the loop is in manual operation. Actuator output and setpoint must not be changed manually in this situation. Manual operation is enabled for emergency intervention.

When self-tuning is finished, the display changes. When self-tuning is re-entered, (figure 11-6, then figure 11-11), the calculated values are offered for confirmation.

4. Switch between display of Gain, Tr and Td:
   <▲>,<▼>
5. To change the displayed value:
   <Enter>
   <▲>,<▼>

or

Exit self-tuning:
<Esc>

11.4.4 Accepting the parameters

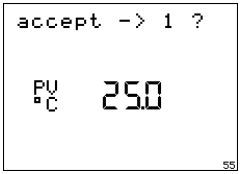

Fig.11-11 Accept ->1?
z-19055

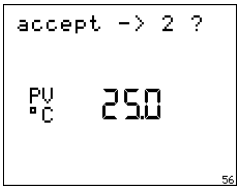

Fig.11-12 Accept ->2?
z-19056

After the determined values have been displayed and change, if required, they can be accepted.

1. Accept values:
   <Enter>

For controllers with two actuator functions HEATING-OFF-COOLING or split-range you must decide whether the determined parameter set is to be used for HEATING (Accept ->1) or COOLING (Accept -> 2).

11.4.5 Rejecting the parameters

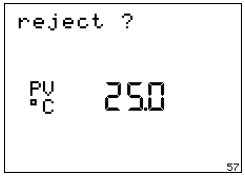

Fig.11-13 Reject?
z-19057

1. Reject parameters:
   <Enter>

The previously set values are retained.

11.4.6 Cancelling self-tuning

Fig.11-14 Cancel self-tuning?
z-19046

While self-tuning is executing, you can cancel self-tuning by re-entering the menu level and opening the self-tuning menu option.

1. Cancel self-tuning:
   <Enter>

or

2. Do not cancel self-tuning:
   <Menu>

The display jumps back to the menu level.

12 Configuration

In this Section you will find a detailed description of the configuration of the controller via front keys in the menu "configuration".
Please be advised that the configuration can also be done via the PC software IBIS-R.
In addition we want to point out the "quick configuration" facility in the menu "template". You will find a detailed description in Section 16, Quick configuration in the Template menu.
The "quick configuration" is very convenient and absolutely sufficient for many applications.

12.1 Selecting the configuration

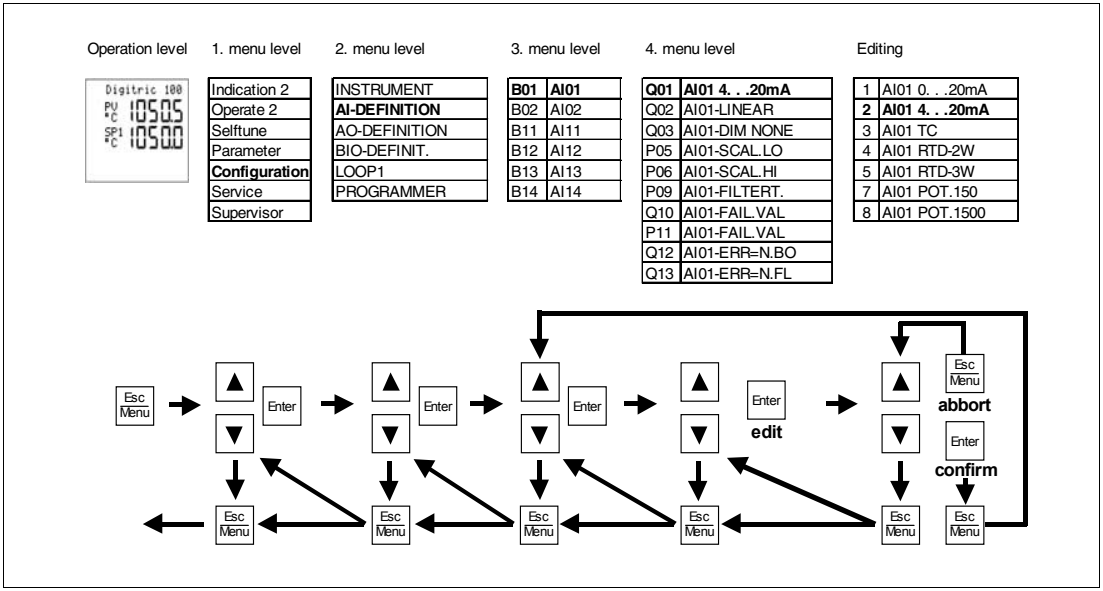

Fig.12-1 Configuration menu, example: configuring analog input AI01

12.2 Configuration table structure

The configuration tables depicted in these instructions (see end of the manual) are structured as follows:

Instrument	all parameters valid for the entire device.
AI definition	Analog inputs with the functions defining sensors, linearization, filtering, scaling
AO definition	Define signal ranges of the analog outputs
BIO definitions	Define binary inputs/outputs as inputs or outputs
Loop 1	Configure control function with the functions for actuator output, input relations, PID structure
State corr.1	Select and parameterize state correction.
Programmer	Activate programs

12.3 Sequence of configuration

The following sequence for the configuration of a new instruments is recommended:

1. Instrument
2. Analog inputs
3. State correction, if applicable
4. Analog outputs
5. Binary inputs/outputs
6. Control function

12.4 Changing the configuration

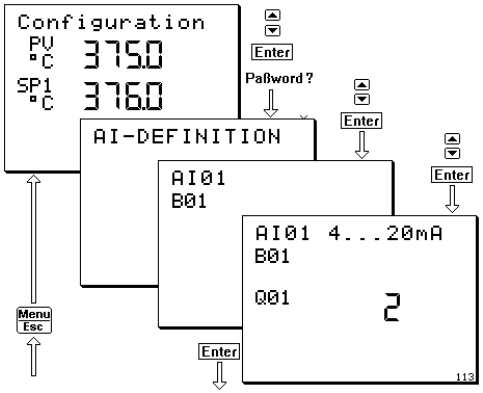

Fig.12-2 Selection of →AL-Def.→ B01 → Q01
z-19113

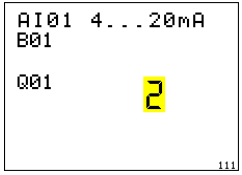

Fig.12-3 Changing the configuration
z-19111

During configuration, questions (Qx) or parameters (Px) may be offered for modification.

1. Enable the selected question/parameter for modification:
   <Enter>

Enter ❍

The enabled change flashes.

Questions are answered with a one- or two-digit number. Parameters require the input of values with up to 5 digits (see section “Parameterization”).

2. Change the flashing position:
   <▲>,<▼>
3. Move the flashing position:
   <Ind>
4. Shift the decimal point:
   Press and hold <Ind>

The text associated with the currently flashing number is displayed in the text line.

5. Accept selected answer:
   <Enter>

Enter ●

The answer stops flashing.

12.5 Exit configuration menu

Fig.12-4 Check answer
z-19138

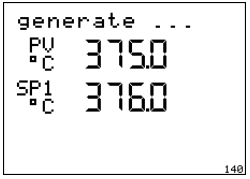

Fig.12-5 Generate…
z-19140

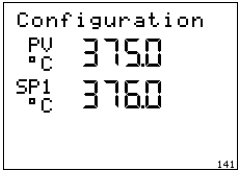

Fig.12-6 Configuration
z-19141

<Menu> jumps one level up in the menu system.

If you press this key longer than 5 seconds, the menu system is exited.

If the plausibility function is enabled (see section “Supervisor”), the instrument checks the configuration for completeness and plausibility when exiting the configuration menu.

Subsequently, the function settings are processed for execution.

After successful configuration the instrument switches back to the configuration menu.

1. Exit configuration menu:

<Esc>

13 Configuration examples

This chapter describes examples for some of the most important configurations. The configuration tables listed later in this document contain more details about the possible configuration options.

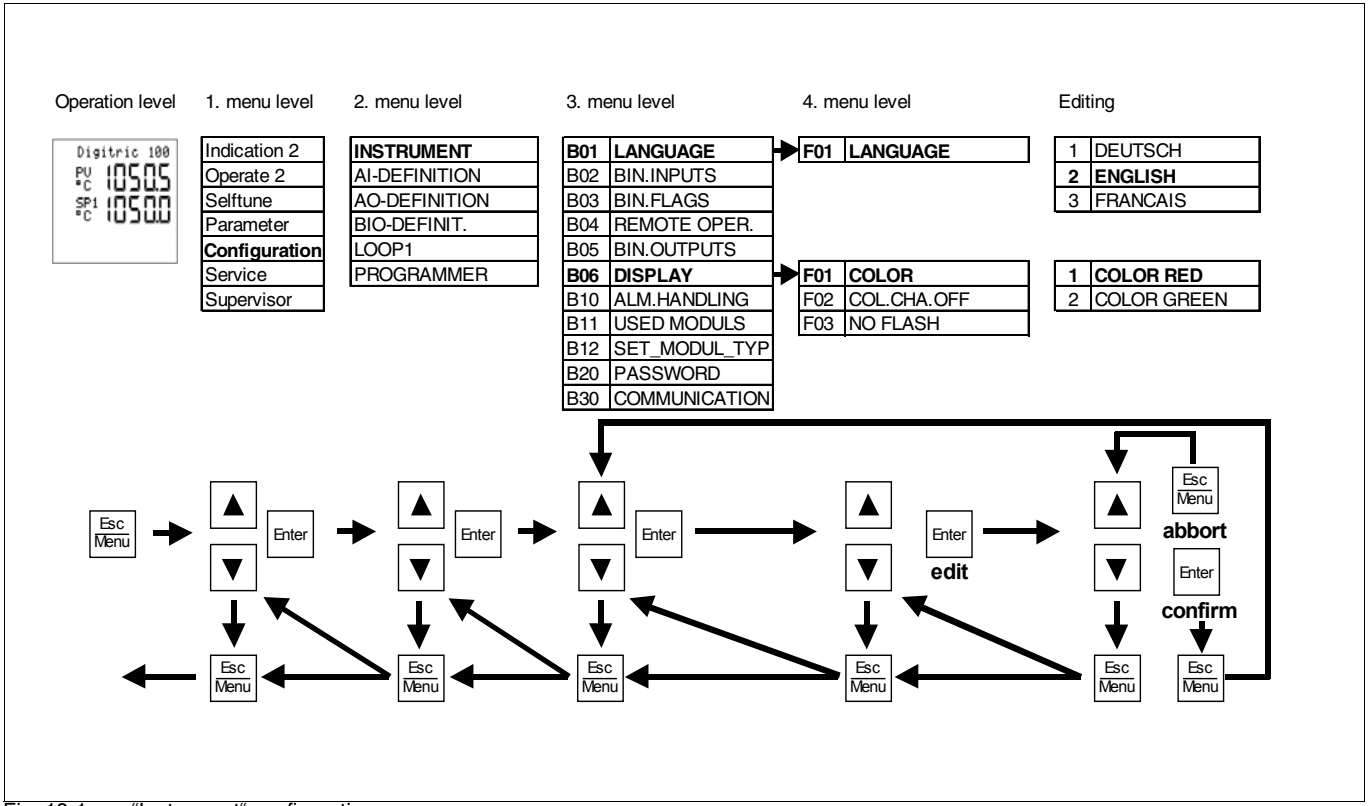

Fig. 13-1 “Instrument“ configuration menu

13.1 Device

13.1.1 Hardware

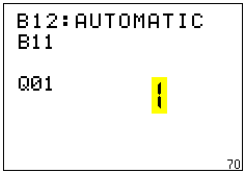

Fig.13-2
z-19070

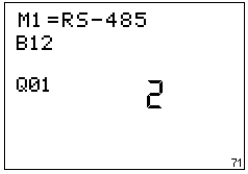

Fig.13-3
z-19071

Special attention should be paid to item I-B11-Q01 “Hardware definition“. Which input/output modules can be configured depends on the available modules that are registered in I-B12-Q01. When the hardware recognition is enabled (I-B11-Q01=1), the existing module is automatically recognized and entered in I-B12-Q01. I-B11-Q01 is then automatically reset to zero.

A module that does not (yet) exist can be entered manually in I-B12 to be considered for the configuration. However, the device cannot be commissioned with an incomplete hardware. In this case, the error message “Slot 1“ is output.

13.1.2 Password

Fig.13-4 Setting the password
z-19117

The password is a number of up to 5 digits.

I-B20-Q01 = 0	Existing password is deactivated
I-B20-Q01 = 1	Password protection is enabled. Upon exit from the menu system the password protection will become active immediately.
I-B20-Q01 = 2	Upon exit from the menu system the password protection will only be activated after 3 seconds. Within this delay it is possible to select the parameter or configuration level again without re-entering the password.
I-B20-Q02	Active password, changes enabled. Parameter(s) being changed.

13.2 AI definition

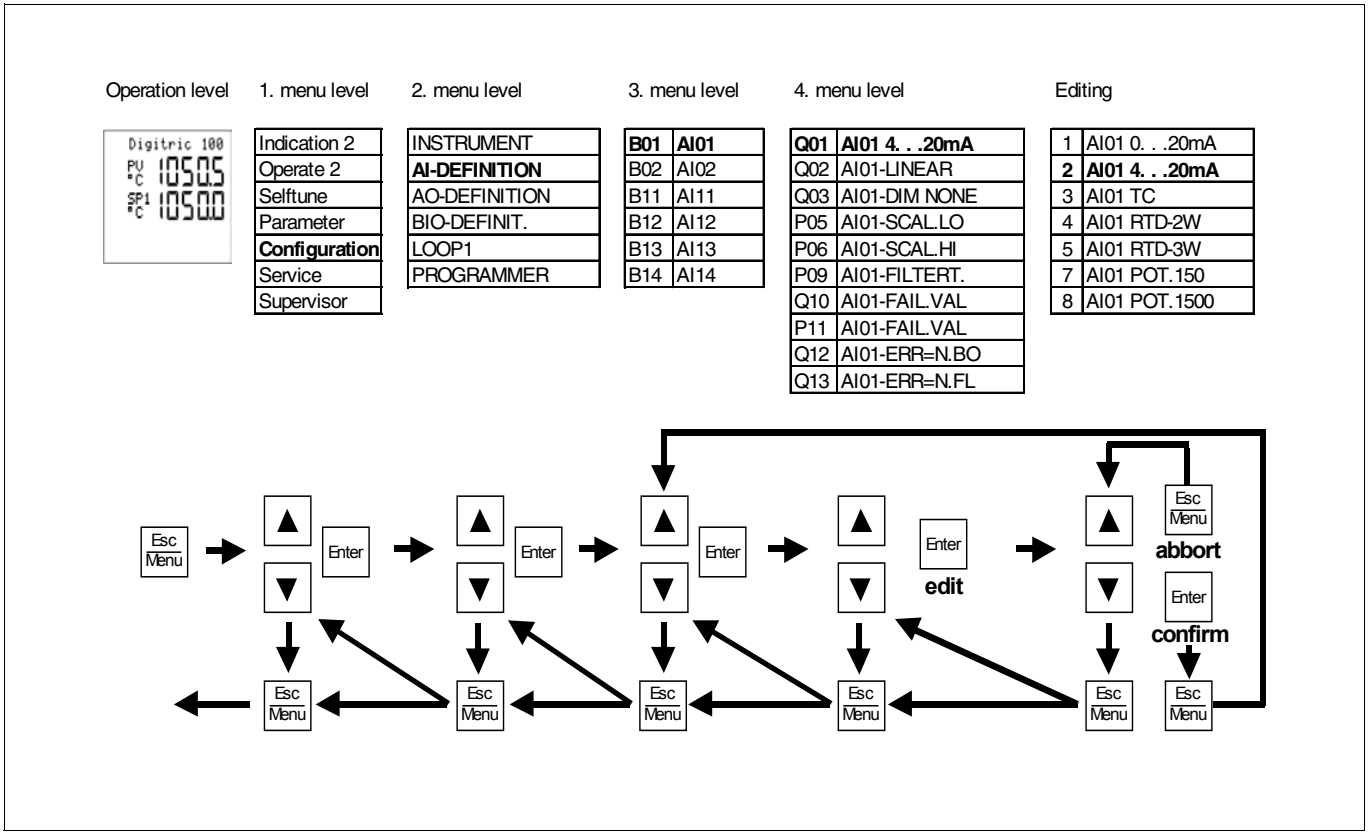

Fig. 13-5 Analog input menu

13.2.1 General

All analog input must be scaled to permit their further use in the device. The scaling is used to define the measuring values, which are then used as floating point values for all further processing steps in the device.

How the digital input, i.e. process value PV, is displayed in terms of the range and number of digits to the right of the point can be set independently.

Example:
Thermocouple type K
Measuring range of the sensor: -200...+1400 °C
Control range: 300.0...500.0 °C

AI01 is the universal input of the basic unit. The sensor is connected according to its type and connection diagram. The input type must be entered in the device module AI-B01-Q01.

AI02 is an optional universal input connected to the main board.

AI1y are the analog inputs of the module in slot 1; y represents the number of the input on the module.

13.2.2 Sensor problems

All inputs and sensor types are monitored.

1. Reaction of the controller:

AI-Bxy-Q10 = 1
In case of sensor troubles or cable break the missing measured value is replaced with a default value, which may be outside the normal measuring range to force the corresponding controller action.

AI-Bxy-Q10 = 2
L1-B07-Q06=1
An unchanged measured value is simulated to the controller. The controller output does **not** react on the sensor trouble.

2. Signal transmission:
With AI-Bxy-Q12 > 0 and AI-Bxy-Q13 > 0 signal transmission is possible independently of the controller reaction.

13.2.3 Dimension

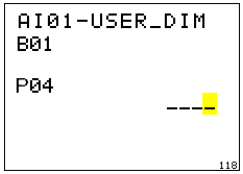

Fig.13-6 Defining a user-specific dimension
z-19118

Every input is scaled separately and can be provided with an own dimension.

In the first step, the dimension "° C" is assigned by default to all temperature sensor inputs.

AI-Bxy-Q03
provides various dimensions for selection. If the needed dimension is not available, a 4-digit dimension can be created in AI-Bxy-P04 by setting AI-Bxy-Q03 = 1.

13.2.4 Filtering

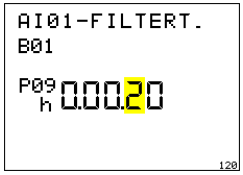

Fig.13-7 Filter time constant 0.00.20 h = 20 s
z-19120

All measuring signals can be attenuated with a first degree delay filter to suppress all measured value variations and the troubles resulting from them. The time constant can be set with AI-Bxy-Q09
(max. 0.02.00 h = 2 min).

13.2.5 mA inputs

AI-Bxy-Q01 = 1,2	Signal range 0 or 4 to 20 mA.
AI-Bxy-Q03	Measured value is indicated linearly and with the selected scaling.
AI-Bxy-P05	Display with measured value 0 or 4 mA.
AI-Bxy-P06	Display with measured value 20 mA.
AI-Bxy-Q02 = 2,3	Measured value is square-rooted. Below PV0 the resulting measured value is forced to 0 or replaced with a linear calculated value.
AI-Bxy-P08	Used for setting PV0.
AI-Bxy-Q02 = 4...14	If the measured value is provided by a non-linearized temperature transmitter, the sensor characteristic may be used by default. With AI-Bxy-P05 and P06 the transmitter range can be set.

Example:

Transmitter
300 to 700 °C, type K = 0... 20 mA, mV-proportional:

AI-Bxy-Q01 = 1
AI-Bxy-Q02 = 6
AI-Pxy-Q05 = 300,0
AI-Pxy-Q06 = 700,0
AI-Bxy-Q03 = 3 (automatic)

13.2.6 Thermocouple input

AI-Bxy-Q01 = 3	Thermocouple.
AI-Bxy-Q02 = 4...13	Selection of thermocouple type.
AI-Bxy-Q03 = 3	Can be switched to °F; AI-Bxy-Q03 = 4.
AI-Bxy-Q07 = 0...4	Depending on the reference junction compensation.

13.2.7 Resistance thermometer input

AI-Bxy-Q01 = 4, 5, 6	Depending on the used connection type
AI-B01-Q02	There are 2 ranges for AI01: = 13 -200.0...+200.0 °C = 15 -200.0...+800.0 °C
AI-B02-Q02	As AI01, if existing, 4-wire circuitry is also possible.

With 2-wire circuitry line balancing (adjustment) is required (see Section “Service“).

13.2.8 Teletransmitter input

Usually, the upper and lower range values must be adjusted for teletransmitter measurement. Refer to Section “Service“ for detailed instructions. The scaling and linearization are the same as for mA-inputs.

Universal input AI01for teletransmitter measurement:

AI-B01-Q01 = 7 or 8

Universal input AI02 for teletransmitter measurement:

AI-B02-Q01 = 7 or 8

13.3 Characteristic curve

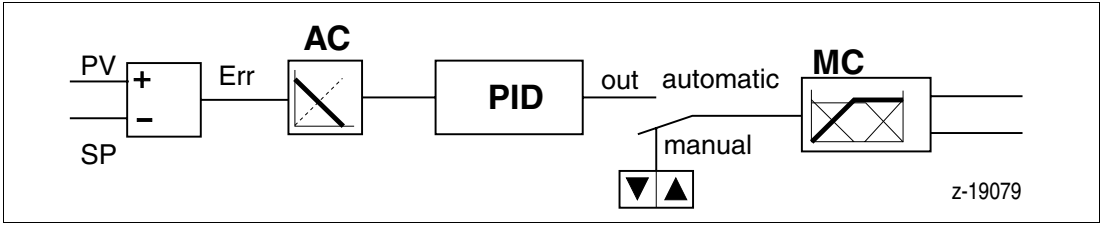

Fig.13-8

There are two characteristic curves for controllers. Proceed in the order seen below to set them:

Manual characteristic curve (MC) L1-B01-Q03

The manual characteristic defines how the controller output reacts upon actuation of the manual control buttons <▲> and <▼> (this function is defined by the type of wiring when using step controllers).

The requirements specified for this result from the safety aspects that are relevant for the control unit.

Example:

Valve is spring-opened and is closed in proportion with the output current, i.e. it is open when not under power.

or

Valve is spring-closed and is opened in proportion with the output current, i.e. it is closed when not under power.

Through selection of the proper characteristic curve it is possible to open the valve by actuating the < ▲> button, independent of the type. An open valve is indicated through y = 100 %.
The MC block may additionally define splitting of the PID function output signal into two output signals with the same or different characteristic curves (split-range).

Automatic characteristic curve (AC) L1-B02-Q01
The automatic characteristic curve defines how the controller reacts upon a change of the controlled variable, i.e. whether the output shall increase or decrease with increasing process value. Is the system cooling to be intensified with increasing temperature, or shall heating be reduced?

Observe the selected manual characteristic curve when setting the automatic characteristic curve.

13.4 Setpoints

Up to 7 setpoint sources are available in the controller:

– up to 4 setpoints (SP1 to SP4) that can be entered manually or via the serial interface
– 1 external setpoint Sxt, in conjunction with an analog input,
– 1 computer setpoint SPC and
– 1 programmer with 10 programs P01 to P10.

Which of the setpoints are available is defined by configuring the device accordingly.

13.4.1 Setpoint 1

L1-B05-Q01 = 0	Setpoint SP1 can be switched off for applications with only an external setpoint. Setpoint SP1 cannot be activated with ratio control.
L1-B05-Q01 = 1	Setpoint can be changed via the control buttons or via the interface.
L1-B05-Q01 = 2	When another setpoint is active, the setpoint SP1 follows the active setpoint. This permits bumpless transfer to setpoint SP1.
L1-B05-Q02 = 0	The current setpoint is not saved in the configuration. It cannot be transmitted to another device together with the configuration data.
L1-B05-Q02 = 1	On the parameter level L1-P81 is set as setpoint SP1 and saved accordingly. This value can be transmitted to other devices. Setpoint changes on the operation level resulting from the process are not saved in the configuration.

13.4.2 Setpoint SP2 to SP4 = Ratio setpoint SR1 to SR3

It can be configured for every setpoint if:

– it can be changed via the front panel
– it can be changed and saved as parameter L1-P82 to L1-P84 or
– it is active as absolute value or differential value as compared to setpoint 1 (difference can only be set on the parameter level).
– For ratio control the setpoints SP2 to SP4 always correspond to the ratio setpoints SR1 to SR3. Setpoint SP 1 does not exist.

13.4.3 Computer setpoint

The computer setpoint can only be modified via the interface.

13.4.4 Setpoint ramp

The setpoint ramp is always active, but is practically disabled through the factory setting 99999 EU/s.

The setpoint ramp function can be enabled with L1-P77 (increasing ramp) or L1-P79 (decreasing ramp).

Setpoint display during transfer from old setpoint to target setpoint:

L1-B05-Q09 = 1	Target setpoint displayed
L1-B05-Q09 = 2	Current setpoint, defined by the ramp is displayed

13.5 Programmer

One programmer saving up to 10 programs with 15 segments each is available.

13.5.1 Configuring programs

The individual programs can be activated in the configuration menu (P-B01-Q01 to Q10):

0 Program is not active and cannot be selected via the front panel.

1 The program starts with the initial setpoint programmed with P-P01.

2 The program starts with the actual value at that time (PV_0) and not with the initial setpoint.

The gradient $\frac{|P2-P1|}{T1}$ is calculated.

The program setpoint then runs up/down as a ramp value with a positive or negative gradient until reaching the setpoint P_2. The duration of segment 1 is prolonged/shortened accordingly. If $P_1 = P_2$ (i.e. gradient is 0), the program setpoint changes within the configured time T_1 from PV_0 to P_2.

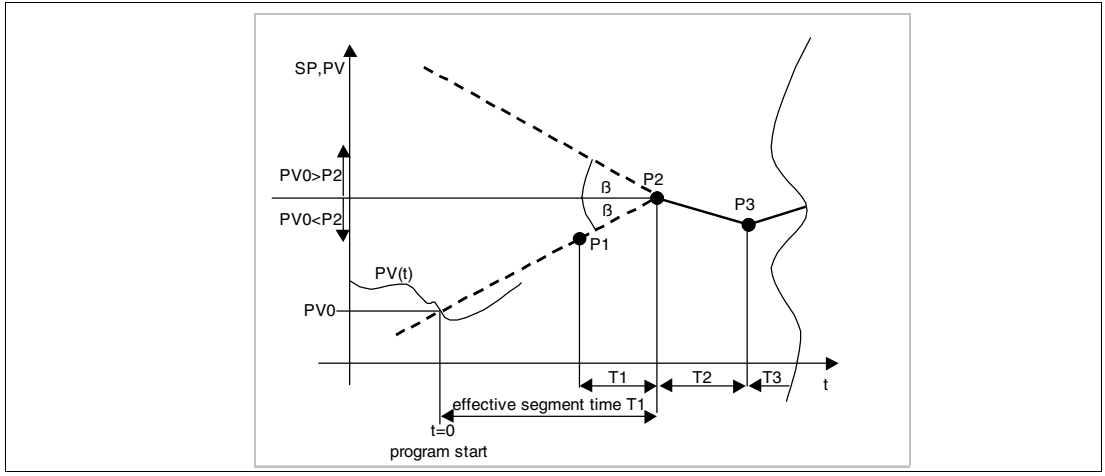

Fig.13-9 Program start

Additionally, it can be configured how programs shall behave when the power returns (P-B02-Q01):

0 Program is reset upon power return

1 Program restarts in the previous operating mode, i.e. continues at the same point where it has stopped when the power outage occurred:
Exception:
If the program is configured to start up with the actual value, this is not valid when the program is in the first segment when the power outage occurs.

13.5.2 Parameterizing programs

Parameters P-P01 to P-P31
The program generator parameters Px-P01 to Px-P31 define the behavior of the setpoint in dependence of the time. Parameter Px-P01 is the initial value. The value of parameter Px-P02 is reached after a time period Px-P17. For a step response the time has to be set to “0“.

Note

A segment with an end value of -9999 will terminate the program when the previous segment has been run through.

Parameters P-P32 to P-P46
There are four binary tracks that are time-synchronous with the segments of the setpoint program. These four binary tracks can be set in each segment. The sum of the wanted outputs is to be entered in the respective parameter:
Binary track 1 set in segment s: Px-P(31+s) = 1
Binary track 2 set in segment s: Px-P(31+s) = 2
Binary track 3 set in segment s: Px-P(31+s) = 4
Binary track 4 set in segment s: Px-P(31+s) = 8
Example:
Binary tracks 1, 3 and 4 are to be set in segment 2:
Px-P33 = 13 = 1 + 4 + 8.
The 4 binary tracks can be applied to the binary outputs of the controller under L1 - B11 - Q10 to Q13.

Parameters P-P47 to P-P49
The parameters Px-P47 to Px-P49 can be used to configure a loop between the segments number Px-P47 and Px-P48. After reaching the end of the segment Px-P48, the program generator will run through this loop until the total number of runs reaches the amount set under Px-P49. After this, the remaining segments will be processed.

Parameters P-P50 to P-P64
The parameters P-P50 to P-P64 are used to define whether or not the program is stopped in the individual segments when the measured value cannot follow the given setpoint.
This will stop the ramps, and hold times will only run when the measured value is within the tolerance band (setpoint ± tolerance). The factory setting 99999 disables this function.

13.5.3 Programming table for a program

x = program; x = 01 to 10

segment	setpoint	segment time	tolerance (+/-)	4 binary tracks
1	Px-P1 = start value Px-P2 = end value	Px-P17	Px-P50	Px-P32
2	Px-P3 = end value	Px-P18	Px-P51	Px-P33
3	Px-P4 = end value	Px-P19	Px-P52	Px-P34
4	Px-P5 = end value	Px-P20	Px-P53	Px-P35
5	Px-P6 = end value	Px-P21	Px-P54	Px-P36
6	Px-P7 = end value	Px-P22	Px-P55	Px-P37
7	Px-P8 = end value	Px-P23	Px-P56	Px-P38
8	Px-P9 = end value	Px-P24	Px-P57	Px-P39
9	Px-P10 = end value	Px-P25	Px-P58	Px-P40
10	Px-P11 = end value	Px-P26	Px-P59	Px-P41
11	Px-P12 = end value	Px-P27	Px-P60	Px-P42
12	Px-P13 = end value	Px-P28	Px-P61	Px-P43
13	Px-P14 = end value	Px-P29	Px-P62	Px-P44
14	Px-P15 = end value	Px-P30	Px-P63	Px-P45
15	Px-P16 = end value	Px-P31	Px-P64	Px-P46

Table 13-1 Programming table

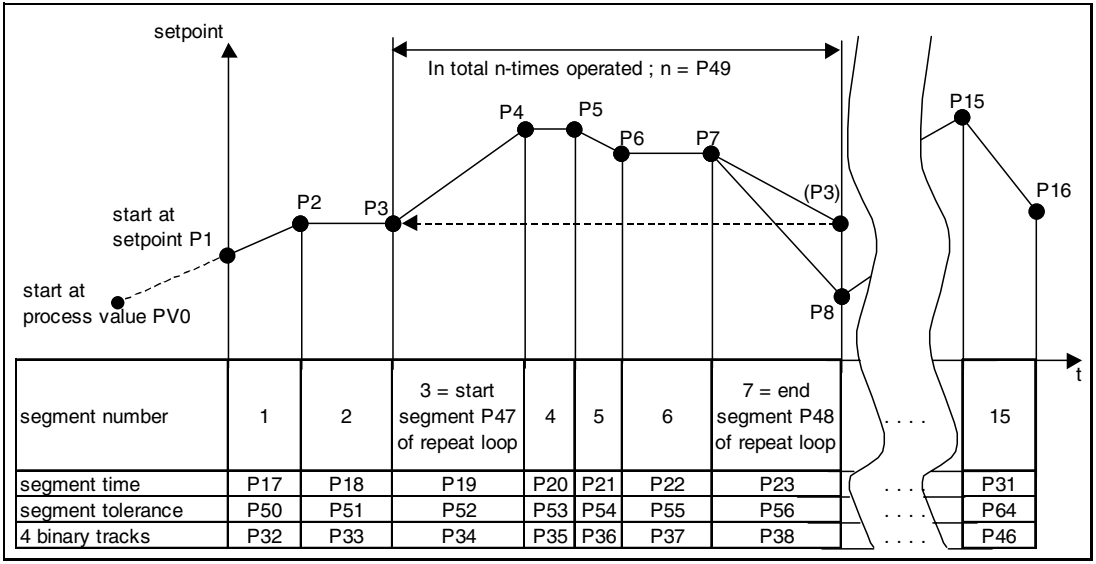

segment number	1	2	3 = start segment P47 of repeat loop	4	5	6	7 = end segment P48 of repeat loop	. . . .	15
segment time	P17	P18	P19	P20	P21	P22	P23	. . . .	P31
segment tolerance	P50	P51	P52	P53	P54	P55	P56	. . . .	P64
4 binary tracks	P32	P33	P34	P35	P36	P37	P38	. . . .	P46

Fig.13-10 Programmer with loop, segments 3 to 7

13.6 Fixed-value control

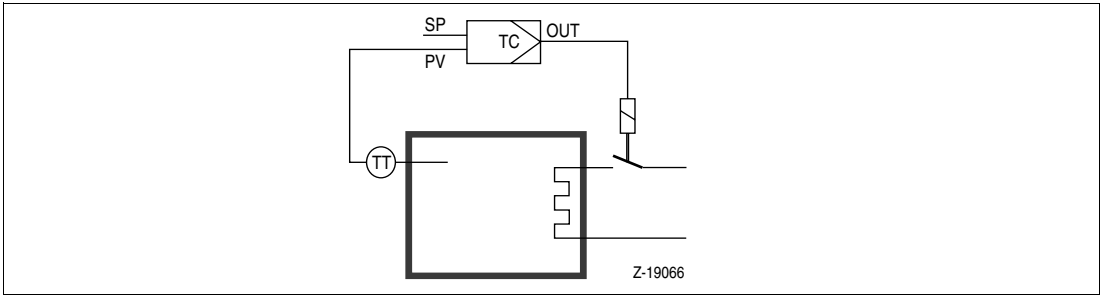

Fig.13-11 Fixed-value control

13.6.1 Task

The process value PV is controlled until reaching setpoint SP generated inside or outside the controller. When used for steam or gas flow control, a state correction function may be enabled additionally (see “State correction“).

13.6.2 Configuration

Input linkages

L1-B03-Q01 = 1;	Input circuit for fixed-value control.
L1-B03-Q02	Not used.
L1-B03-Q03	Usually 2; Err in EU.
L1-B03-Q04	Dimensions for PV/SP display.
L1-B03-P05	User-defined dimension.
L1-B03-Q06	Decimal point position in the digital indicator.
L1-B03-P07	Value (number) for lower range value of digital indicator.
L1-B03-P08	Value (number) for upper range value of digital indicator
L1-B03-P16	Desired lower range value for analog indicator
L1-B03-P17	Desired upper range value for analog indicator

The difference between L1-B03-P08 and L1-B03-P07 is the reference value for Gain. For a P-controller with Gain = 1 an output change of 100% results from a input change of P08 - P07.

13.6.3 Example 1

Thermocouple type K, measuring range -200...+1400 °C: Correct values will be achieved between -200 °C and +1400 °C.

Control range

900.0 to 1100.0 °C with one digit to the right of the decimal point:

L1-B03-Q04 = 3 Indication in °C

L1-B03-Q06 = 1 Decimal point position 0000.0

Note

When the number of digits or decimals of the measured value exceeds the number of digits of the display, the number of decimals is automatically reduced.

L1-B03-P07 = 900 Lower range value

L1-B03-P08 = 1100 Upper range value

No need to change the position of the decimal point.

Analog indicator

L1-B03-P16 = 900 Lower range value

L1-B03-P17 = 1100 Upper range value

Any other setting between -200 and +1400 is possible and permitted if it makes sense from the point of view of the plant. No need to change the position of the decimal point.

Annotation

Since Digitric 100 has no analog indicator, this setting is only relevant if the signal is applied to an analog output (0/4...20 mA).

Setpoint limits

The setpoint limits should be set to useful values within the range of control.

L1-B03-P75 SP_{min} = 900 (°C)

L1-B03-P76 SP_{max} = 1050 (°C)

13.6.4 Example 2

Fixed-value control with state correction.
The inputs needed to calculate the flow rate must be configured in the appropriate units (mbar, bar, °C). The resulting signal can, for example, be calculated in m^3/h.

Measuring range

0...20000 m^3/h	After state correction

Control range
Same as measuring range

L1-B03-Q04 = 7	Indication in m^3/h
L1-B03-Q06 = 0	No decimal point position

Note
With a display up to 20000 no digit to the right of the decimal point is possible.

L1-B03-P07 = 0	Lower range value
L1-B03-P08 = 20000	Upper range value

Analog indicator

L1-B03-P16 = 0	Lower range value
L1-B03-P17 = 20000	Upper range value

Setpoint limits
The setpoint limits should be set to useful values within the range of control.

L1-B03-P75	SPmin = 5000 (m^3/h)
L1-B03-P76	SPmax = 18000 (m^3/h)

Analog input routing
Usually, the following is valid for single-loop controllers without modules:

L1-B04-Q01 = 1:	Input AI01 = process value PV.

However, another configuration is also possible. The second analog input AI02 can execute various tasks:

1. Position feedback for step controllers
   L1-B01-Q04 = 2
2. External setpoint
   L1-B05-Q06 = 2

3. 2nd switchable measured value source
   L1-B04-Q02 = 2 together with
   L1-B04-Q06 = 1 to 16, depending on the available binary input

Note

The two measured values must have the same dimension, but may have different measuring ranges.
Examples:
– Level control of two different tanks.
– Temperature control with thermocouple measurement up to 1200 °C and pyrometer measurement between 1000 and 2500 °C.

4. Parameter control
   Gain: L1-B02-Q07 = 13 or/and
   Tr: L1-B02-Q10 = 13 or/and
   Td: L1-B02-Q13 = 13 or/and
   MR: L1-B02-Q16 = 13 or/and
5. Disturbance variable feedforward
   L1-B02-Q25 = 2 together with
   L1-B02-Q26 = 1 to 4
6. Output tracking
   (Output is temporarily forced to value of input 2, not for step controllers)
   L1-B10-Q10 = 2 together with
   L1-B09-Q11 = 1 to 16 (Blxy)

13.7 Multi-component control

The multi-component input circuit is used to calculate the actual value PV from several measured variables.

13.7.1 Application

Summation circuits for measuring signals or setpoints.

Example: Control of the cumulative values of two flow rate signals.

Additionally, state correction is possible and can be integrated for gas or steam flow measurement (see the respective section of this manual).

13.7.2 Configuration

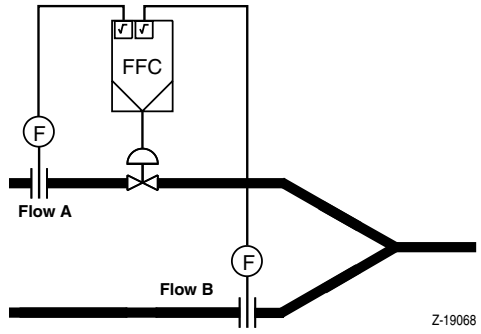

Fig.13-12 Flow rate summation

If only two values are to be summed up in a single-loop controller, it may be sufficient to use the basic device.

Input circuit for multi-component measurement

L1-B03-Q01 = 2	Err = IC1 × CONST1 + CONST2 (IC2 + CONST3 ×IC3) - SP
L1-B03-Q02 = 2 or 5	
L1-P101 = 1	
L1-P102 = 1	
L1-P103 = 0	with only two inputs
L1-B03-Q03 to P08	depending on the input configuration
L1-B03-P16	Start value of the analog indicator
L1-B03-P17	End value of the analog indicator

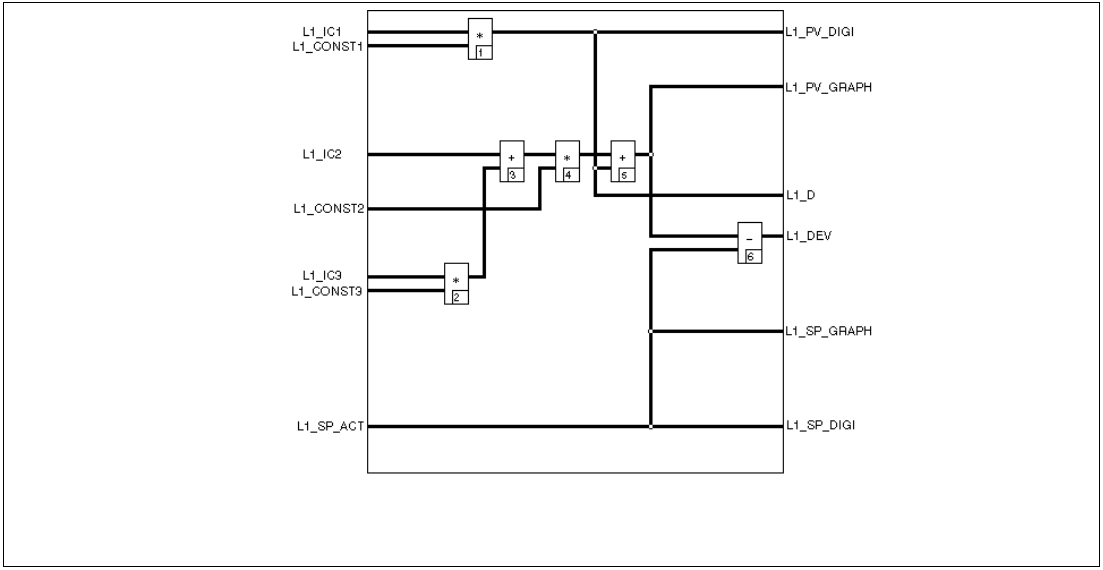

Fig.13-13 Multi-component input circuit
z-19095

.L1_ICx Inputs of the multi-component input circuit routed via L1-B04-Q0x with the analog inputs AIxy
.L1_CONSTx Evaluation factors CONST1 to CONST3 = L1-P101 to L1-P103
.L1_SP_ACT Current setpoint
.L1_PV_DIGI Digital indicator for PV
.L1_SP_DIGI Digital indicator for SP
.L1_PV_GRAPH Analog indicator for PV
.L1_SP_GRAPH Analog indicator for SP
.L1_D To derivative action
.L1_DEV Control deviation

13.8 Ratio control

The ratio input circuit is used to proportion the controlled variable to the measured variable.

13.8.1 Ratios and setpoints

Several ratio sources SR1 to SR3 (setpoint = SP2 to SP4), one external ratio setpoint (input current), the programmer, and a computer ratio setpoint are available as ratio setpoints.

All ratio input circuits can also be used as fixed value/ratio input circuits. In this case, the setpoint SP1 is added.

The circuitry can be configured in such a way that the setpoint SP1 is tracked as long as it is not used, to ensure bumpless transfer from ratio to fixed value control.

Configuration:
L1-B05-Q01 = 3 The setpoint SP1 is tracked during ratio control.
The ratio setpoint SR1 can be configured to track another ratio setpoint in case of fixed value control or when another setpoint is used. Thus, a bumpless transfer to the ratio setpoint SR1 is possible.

Configuration:
L1-B05-Q03 = 6 The setpoint 2 = SR1 is tracked to the current ratio.

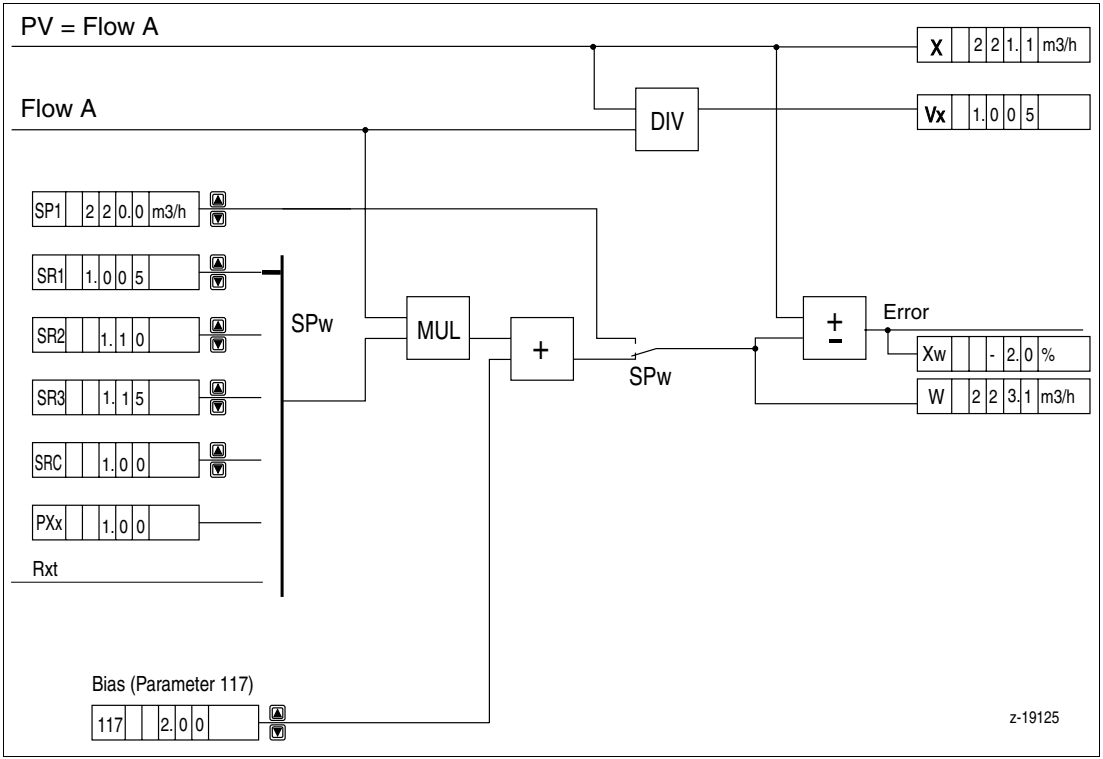

Fig.13-14 Schematic diagram of the input linkages for “ratio A/B“ without signal conditioning for A and B and without scaling or limiting parameters.

13.8.2 Ratio control: Mixed control

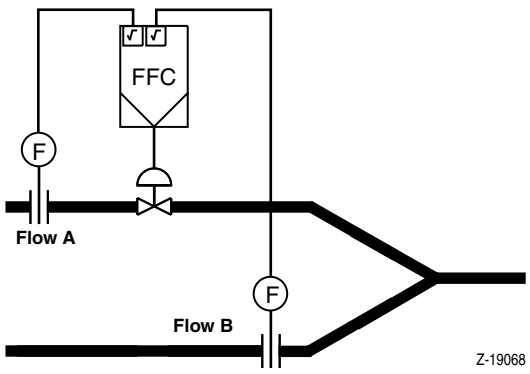

Fig.13-15 Mixture control
z-19068

There are two different ways to set the appropriate setpoint ratio in mixed control applications used in the field of process engineering:

Mixture ratio of the two components:
Ratio 1 RPV = Flow A / Flow B
Example: neutralization control
Portion of a component related to the final product:
Ratio 2 RPV = Flow A / (Flow A + Flow B)
Example: fat content of milk products
The input routing is as follows: Flow A always has to be linked with IC1, Flow B with IC2.

Besides the necessary input routing in dependence of the input modules and their arrangement the following configuration is required.

Configuration of ratio 1: (A/B)
Mixture control RPV = Flow A / Flow B
RPV is the actual value and can theoretically assume any value between 0 and an infinite value.
L1-B03-Q01 = 4 or 5 Ratio or fixed value/ratio
The following user-specific settings can be made for the analog indicators:
L1-B03-Q15 = 2 Ratio process value (RPV) and setpoint (SR)
L1-B03-Q03 = 0 Control deviation in %
or
L1-B03-Q15 = 1 Flow A and flow B× SR (ratio setpoint)
L1-B03-Q03 = 1 Control deviation, indicated in the same EU as flow 1, e.g. in m^3/h
Annotation:
Digitric 100 itself has no analog indicator. However, this settings will be important for external indication of 0/4...20mA signals that are output to an analog output.

Configuration of flow A:

L1-B03-Q04	Dimension e.g. m^3/h
L1-B03-Q06	Decimal point, depending on the application
L1-B03-P07	Lower range value (usually 0)
L1-B03-P08	Upper range value

Configuration of the ratio:

L1-B03-Q09	Digital indicator RPV (ratio value) and SR (set ratio) or PV (flow A) and SR (set ratio) × flow B
L1-B03-Q10	Dimension for R, e.g. without or %
L1-B03-Q12	Digits to the right of the decimal point for the R display
L1-B03-P14	Flow A (20 mA) / flow B (20 mA) Numerical value of the quotient of the scaled input signals with equal measuring values in mA, e.g. end value.
L1-B03-Q15	Analog indicator RPV (ratio process value) and SR (set ratio) or PV (flow A) and SR × flow B
L1-B03-P16	Analog indicator, start of wanted display range
L1-B03-P17	End of wanted display range
L1-B03-Q18	Output of the display defined through L1-B03-Q15 to P17 via analog output

Configuration of ratio 2: (A/(A+B))

Mixture control for portion of the final product RPV = flow A/ (flow A + flow B)

RPV as an actual value or SR (setpoint) can only assume a value between 0 and 1. Therefore, the scaling is set to 0...100% or even smaller.

The configuration is the same as for ratio 1, but with the following exceptions:

L1-B03-Q10 = 2	usually %
L1-B03-P14 =	[flow A (20 mA)] / [flow A (20mA) + flow B (20 mA)] Numerical value of the quotient of the scaled input signals with equal measuring values in mA, e.g. end value.
L1-B03-Q15	Analog indicator RPV (ratio process) and SR (Set ratio) or PV (flow A) and (SR × flow B)/(1-SR)

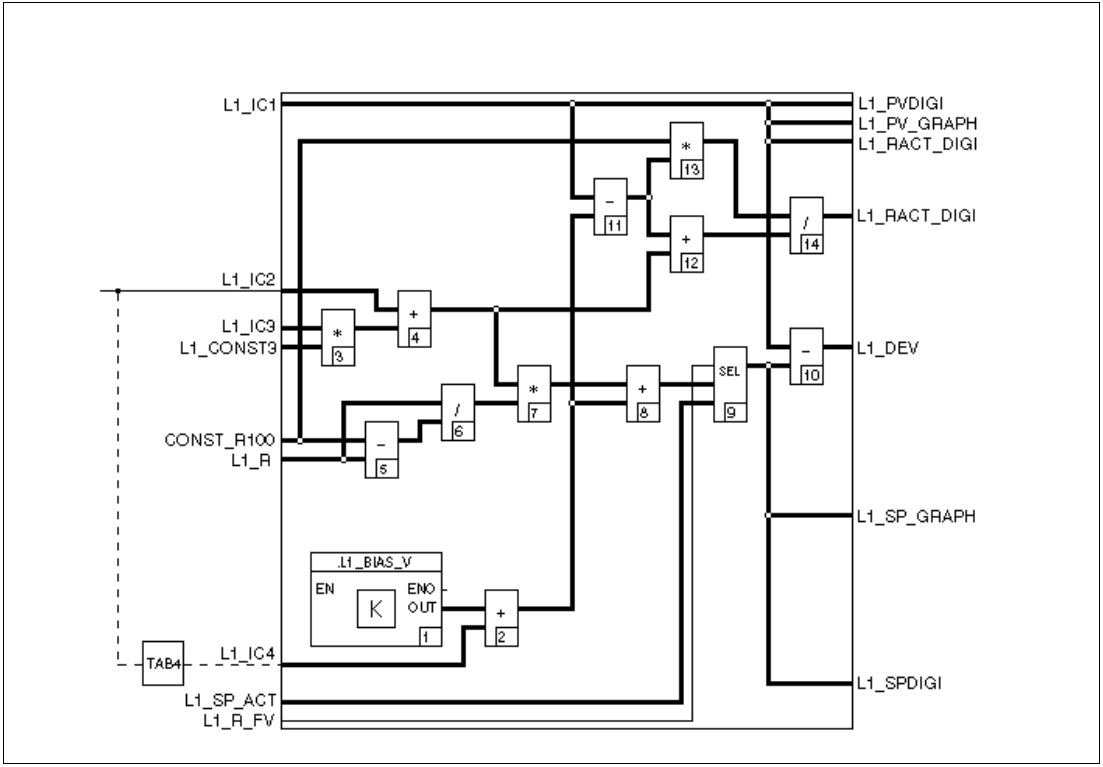

Fig.13-16 Input circuit for fixed value /ratio control 2 (Z-19126)
.L1_ICx Inputs of ratio input circuit are routed to the analog inputs via L1-B04
.L1_R R-sepoint CONST_R100 100
.L_SP_ACTCurrent fixed value setpoint.L1_PVDIGI Digital indicator for PV
.L_-SPDIGI Digital indicator for SP.L1_RACTDIGI Digital indicator for Ractual
.L1_PV_GRAPH Analog indicator for PV.L1_SP_GRAPHAnalog indicator for SP
.L1_RV_FV Switching between fixed value and ratio

13.9 Multiplication

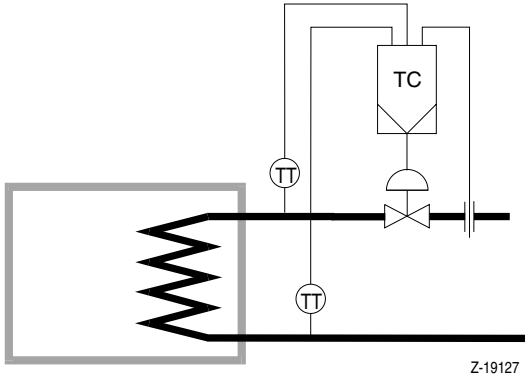

Fig.13-17 Heat control

The multiplication input circuit permits product control with two input variables. Instead of an input variable the weighted total may consist of two variables.

Err = IC1 × (IC2 +CONST3 × IC3)-SP

One possible application is a heat control system. The incoming or outgoing flow of a heat carrier (e.g. water) is measured on a heat consumer, as well as the temperature difference between the flow and the return flow.
To ensure high-precision measurement, the pressure and temperature are determined and then used to correct the flow rate accordingly (for water usually only the temperature is corrected). The corresponding flow or return flow temperature - depending on where the flowmeter is located in the circuit (flow or return flow) - is used for correction.

Configuration
The three inputs are to be scaled with their dimensions.
Input linkages:

L1-B03-Q01 = 3	Multiplication

Routing of state correction:

SC1-B02-Q01 =	Flow signal depending on the used input
SC1-B02-Q02 = 0	No pressure correction
SC1-B02-Q03 =	Flow temperature, depending on the used input
SC1-B02-Q04 = 0	No density correction

Routing of input linkages:

L1-B04-Q01 = 91	Corrected flow signal from state correction 1
L1-B04-Q02 =	Flow temperature, depending on the used input
L1-B04-Q03 =	Return flow temperature, depending on the used input
Parameter:	Setting L1-P103 = -1 will change the addition into the required subtraction.

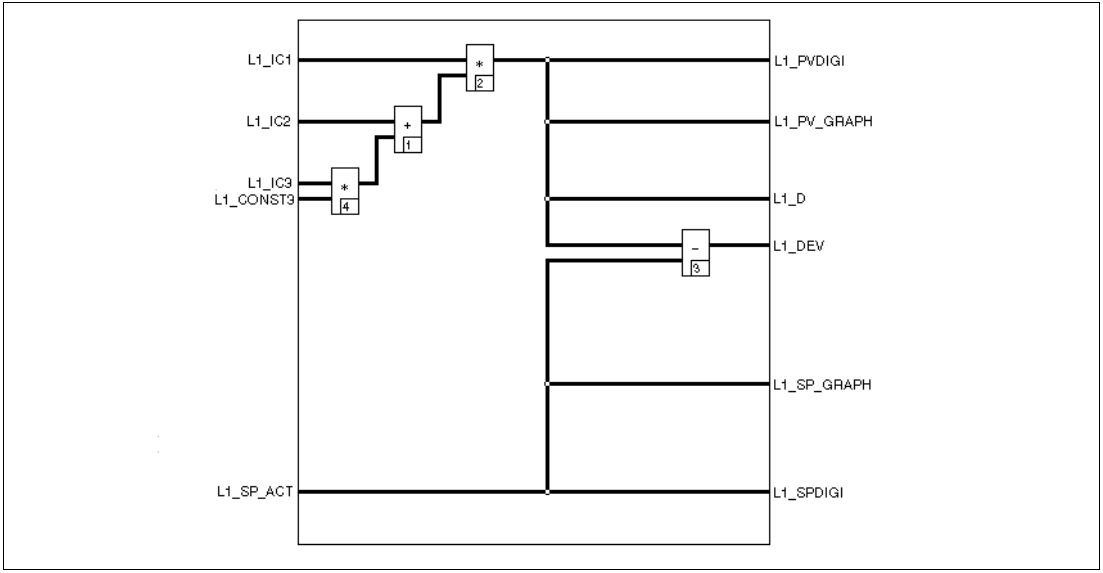

Fig.13-18 Multiplication input circuit
Z-19096

.L1_ICx Inputs of the input circuit
Ratio routed to analog inputs via L1-B04
.L1_CONST3 Weighting factor for IC3
.L1_SP_ACTCurrent setpoint

.L1_PVDIGI Digital indicator for PV
.L1_SPDIGI Digital indicator for SP
.L1_PV-GRAPHAnalog indicator for PV
.L1_SP-GRAPHAnalog indicator for SP
.L1_D To derivative action
.L1_DEV Control deviation

13.10 Parameter changeover/control (Gain scheduling)

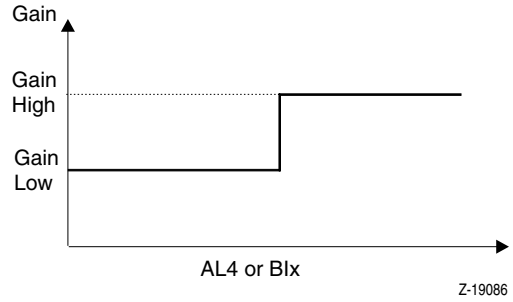

Fig.13-19 Gain changeover

Parameter control and changeover permit to adapt the parameters to reproducible changes of the process.

13.10.1 Parameter changeover

One or several parameters can be changed over in dependence of a limit value or binary input. This is, for example, necessary when changing over between two different measuring signals (process variable).

The changeover is not required when switching between transmitters with different measuring ranges for the same physical variable. The input scaling will not affect the measured value when the changeover is made.

Configuration and parameterization:
L1-B02-Q07 = 11 or 12
Changeover through AL4 or BIx
L1-P07 = Gain-Low
L1-P08 = Gain-High

Special case: P-PI changeover:
Example: Tr-Low is set to 0. As long as Tr-Low is active, there will be no integral action.

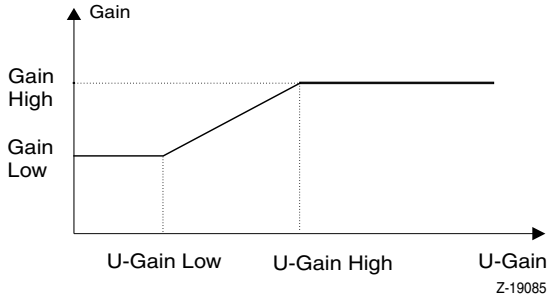

$$Gain = \frac{(G\text{-}Hi)(U_{G\text{-}Hi} - U_{G\text{-}Lo}) + (G\text{-}Lo)(U_{G\text{-}Hi} - U_{G\text{-}Lo})}{U_{G\text{-}Hi} - U_{G\text{-}Lo}}$$

Fig.13-20 Linear parameter control,
U is the controlling variable

13.10.2 Parameter control

Linear

The active parameter is changed linearly between a start value and an end value in dependence of a freely selectable analog variable (setpoint, measured value, output variable, etc.).

Configuration and parameterization:

L1-B02-Q07 = 1 to 5 or 13
Gain control through selected variable
e.g. setpoint (L1-B02-Q07 = 2)

L1-P06 = Gain-Low
L1-P07 = Gain-High
L1-P08 = U-Gain Low
L1-P09 = U-Gain High

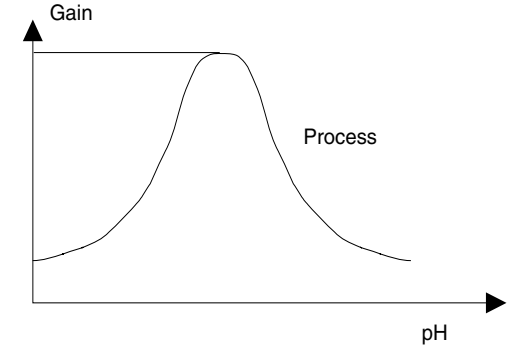

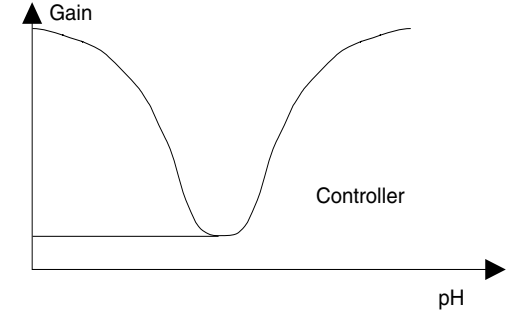

Z--19099

Fig.13-21 Non-linear parameter control through measured value pH

Non-linear

With pH-value control the gain considerably varies with the pH value. The greatest gain is reached with pH 7, the lowest gain values are reached with pH0 and pH14. Therefore, reciprocal gain is provided in the controllers.

Configuration:

L1-B02-Q07 = 7	Parameter control through process variable PV via table 1

Table 1 is parameterized with the control loop gain (derived from the volumetric analysis curve).

13.11 State correction

The measuring instruments for gas or steam flow measurement are designed for special pressure and temperature values. If the actual values differ from the design values, considerable measuring errors may occur. Therefore, correction circuits are provided for correcting these errors. They are suitable for correcting both ideal and real gases.

The state correction calculates from the current measuring values the standardized flow (at 0 °C and 1.013 bar). The state correction can be used together with all input linkages.

Usually, additional analog inputs are required for state correction, and state correction is only possible when the function has been integrated in the configuration (e.g. with L1-B04-Q01 = 91 (flow control with state correction)).

13.11.1 Input and output routing

The state correction inputs can be routed in dependence of the analog input module slots. **Note that the inputs must be scaled**. It is negligible whether a temperature value is connected directly or via a transmitter.

13.11.2 Terms and abbreviations

Index “r“ stands for “calculated values“ (values for orifice design)

Qv	Operating volume flow in m^3/h
Qn	Volume flow in the normal state in m^3/h
Qm	Mass flow in the normal state in t/h
P	in bar absolute or overpressure (depending on transmitter type)
Pr	Absolute pressure
T	Temperature in °C
Pn	Standard pressure 1.0135 bar
Tn	Standard temperature 273.15 K = 0 °C
RHO	Density in kg/m^3
RHO-MIN	Correction range for RHO
RHO-MAX	Correction range for RHO
Patm	Atmospheric pressure in bar abs(olute)
Pr	in bar abs(olute)
Zn	Real gas factor with Pn and Tn (compressibility)

Pmin/Pmax Correction range for P same as for transmitter
Tmin/Tmax Correction für T
P20...28 Real gas factors (factory setting 1.00) (compressibility)

	Tmin	Tmean	Tmax
Pabsmin	P20	P23	P26
Pabsmean	P21	P24	P27
Pabsmax	P22	P25	P28

Table 13-2

HAB Spacing of connection piece in mm gives water level in mm
Tvgl Temperature of reference column in °C.

13.11.3 Configuration for gas and steam

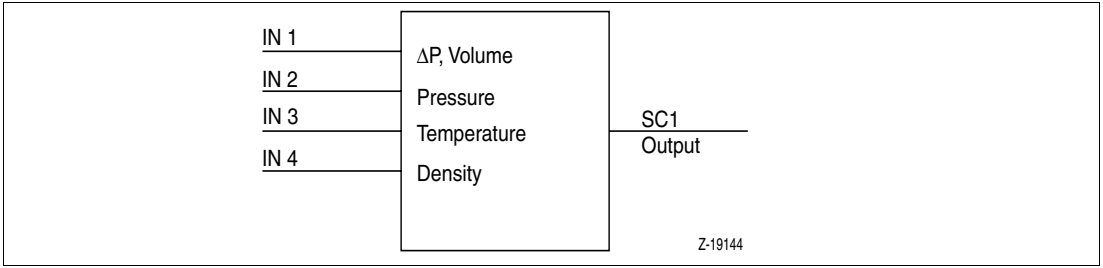

Fig.13-22 State correction for gas and steam
See Table 13-3 to Table 13-5 for details about the parameter and configuration data.

13.11.4 Configuration for water mass flow

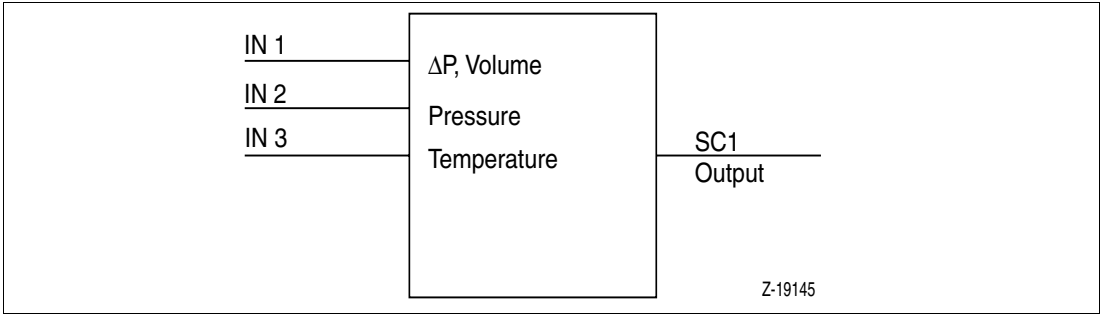

Fig.13-23 State correction for gas, steam and drum water level
See Table 13-6 to Table 13-8 for details about the parameter and configuration data.

13.11.5 Configuration for drum water level

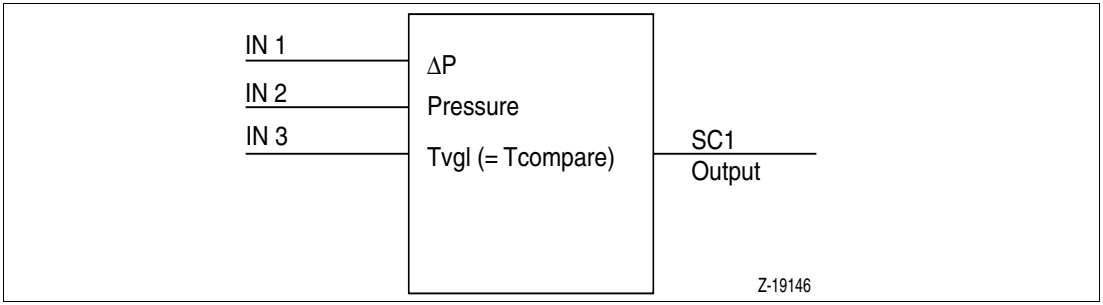

Fig.13-24 Water level
See Table 13-7 and Table 13-8 for details about the parameter and configuration data.

13.11.6 Gas and steam

	Question/ parameter	Gas, differential pressure measurement		Gas, volume measurement	Steam, mass flow, differential pressure		Saturated steam, mass flow, differential pressure pressure correction		Saturated steam, mass flow, differential pressure temp. correction		Unit
	SC1-B01	linear	square-rooted		linear	square-rooted	linear	square-rooted	linear	square-rooted	
	Q01	1	1	2	3	3	4	4	5	5	–
Square rooting	Q29	0	1		0	1	0	1	0	1	–
Standard flow Qn,r or	P02	Value	Value	Value							Nm^3/h
Mass flow Qm, r	P02	Value	Value	Value	Value	Value	Value	Value	Value	Value	kg/h
Differential pressure $\Delta P,r$	P03	Value			Value		Value		Value		mbar
Atmospheric pressure Patm,r,abs	P04	Value	Value	Value	Value	Value	Value	Value			bar abs
Pressure P,r,abs	P05	Value	Value	Value	Value	Value	Value	Value			bar abs
Temperature T,r	P06	Value	Value	Value	Value	Value			Value	Value	°C
Real gas factor Z(Pr,Tr),r	P07	Value	Value	Value							–
Standard density ρn, r	P08	Value	Value	Value							kg/m^3

Table 13-3 Design values of the measuring equipment (calculated values)

linear	No square-rooting of the transmitter or analog input
square rooted	Square rooting of the transmitter or analog input
grayed	No entry required, all entries will be ignored

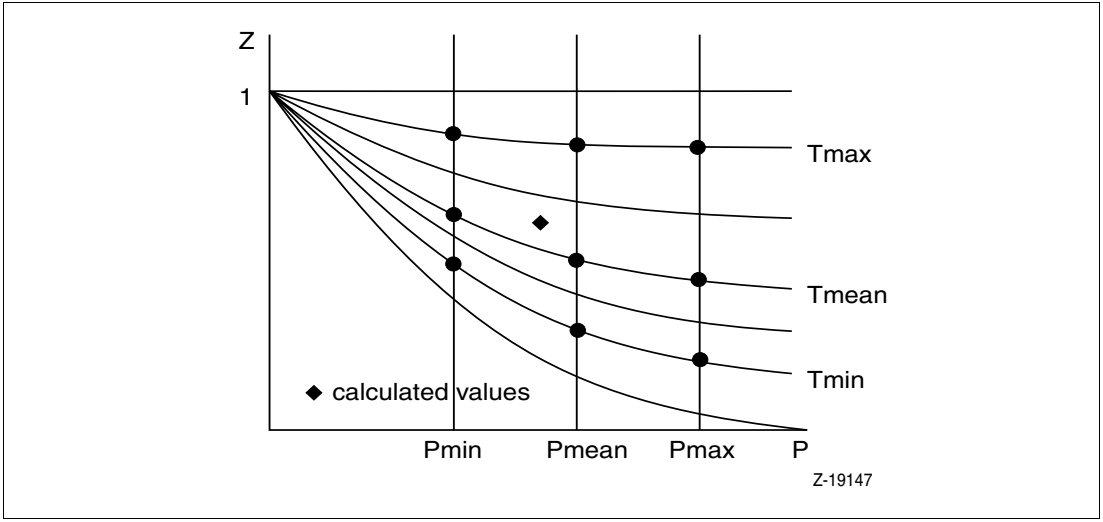

Fig.13-25 Basic characteristic curve for Z = f(P,T)

	Tmin	Tmean	Tmax
Pabs,min	Value (P20)	Value (P23)	Value (P26)
Pabs,mean	Value (P21)	Value (P24)	Value (P27)
Pabs,max	Value (P22)	Value (P25)	Value (P28)

Table 13-4 Real gas factors (factory setting 1.00 for ideal gases).
For orifice calculation the real gas factors have to be determined and provided for commissioning.

	Question/ parame-ter	Gas, differential pressure measurement		Gas, volume measure-ment	Steam, mass flow, differential pressure		Saturated steam, mass flow, differential pressure, pressure correction		Saturated steam, mass flow, differential pressure, temp. correction		Unit
	SC1-B01	linear	square-rooted		linear	square-rooted	linear	square-rooted	linear	square-rooted	
	Q01	1	1	2	3	3	4	4	5	5	–
Pressure transmitter											
Overpressure	Q18	1	1	1	1	1	1	1	1	1	–
Absolute pressure	Q18	2	2	2	2	2	2	2	2	2	–
Correction limits:											
Min. pressure	P10	Value	Value	Value	Value	Value	Value	Value			bar
Max. pressure	P11	Value	Value	Value	Value	Value	Value	Value			bar
Min. temperature	P12	Value	Value	Value	Value	Value			Value	Value	°C
Max. temperature	P13	Value	Value	Value	Value	Value			Value	Value	°C
Min. density	P14	Value	Value	Value							kg/m^3
Max. density	P15	Value	Value	Value							kg/m^3

Table 13-5 Measuring values and correction ranges

The limits for pressure correction must be entered in accordance with the pressure transmitter:

– Overpressure transmitters require pressure limits in overpressure.
– Absolute pressure transmitters require pressure limits in absolute pressure.

If one or several measuring signals are missing, the correction limits must be identical with the calculated values. If the pressure measurement signal is missing, it must be specified in Q18 whether the limits are absolute pressure or overpressure limits.

13.11.7 Water mass flow

	Question/ parameter	Water, differential pressure measurement		Water, volume measurement	Unit
	SC1-B01	linear	square-rooted		
	Q01	6	6	7	–
Square rooting	Q29	0	1		–
Mass flow Qm, r	P02	Value	Value	Value	kg/h
Differential pressure ΔP,r	P03	Value			mbar
Atmospheric pressure Patm,r,abs	P04	Value	Value	Value	bar abs
Pressure P,r,abs	P05	Value	Value	Value	bar abs
Temperature T,r	P06	Value	Value	Value	°C
Real gas factor Z(Pr,Tr),r	P07	Value	Value	Value	kg/m^3
Standard density ρn, r	P08	Value	Value	Value	kg/m^3
Pressure transmitter					
Overpressure	Q18	1	1	1	–
Absolute pressure	Q18	2	2	2	–
Correction limits:					
Min. pressure	P10	Value	Value	Value	bar
Max. pressure	P11	Value	Value	Value	bar
Min. temperature	P12	Value	Value	Value	°C
Max. temperature	P13	Value	Value	Value	°C
Min. density	P14	Value	Value	Value	kg/m^3
Max.density	P15	Value	Value	Value	kg/m^3

Table 13-6 Design values of the measuring equipment (calculated values)

Note

The limits for pressure correction must be entered in accordance with the pressure transmitter:
– Overpressure transmitters require pressure limits in overpressure.
– Absolute pressure transmitters require pressure limits in absolute pressure.

If one or several measuring signals are missing, the correction limits must be identical with the calculated values. If the pressure measurement signal is missing, it must be specified in Q18 whether the limits are absolute pressure or overpressure limits.

13.11.8 Drum water level

	Question	Level measurement	Unit
	Q01 =	8	
Spacing of connection piece HAB	P16 =	Value	mm
Tverg	P17 =	Value	°C
Tmin	P12 =	Value	°C
Tmax	P13 =	Value	°C

Table 13-7 Design values of the measuring equipment (calculated values)

With missing temperature measurement Tmin = Tmax must be set to the reference column temperature.

	Question	Level measurement	Unit
Differential pressure, end value ΔP	Q01 =	Value	mbar
Min. pressure correction, limit Pmin	Q10 =	Value	bar
Max. pressure correction, limit Pmax	Q11 =	Value	bar
Output range, start value	Q30 =	Value	mm
Output range, end value	Q31 =	Value	mm

Table 13-8 Measuring values and correction ranges

13.11.9 Configuring an analog output for outputting state correction results

With the configuration seen in Fig.13-26 the state correction directly provides the calculated results to the input circuit as measuring values.

If an additional analog current/voltage output with the state correction results is required, this can be defined by using the following parameters:

SC1-B01-P30	Lower range value = measuring value for 0% = 0/4 mA or 0/2 V
SC1-B01-P31	Upper range value= measuring value for 100% = 20 mA or 10 V

The values for P30 and P31 may be within or outside the expected calculating results.

SC1-B01-Q32 and SC1-B01-P33 can be set, but are not mandatory and have no effect on the device itself. However, they will simplify possible later verifications of the configuration.

With SC1-B03-Q01 an unused analog output is configured for outputting the correction results.

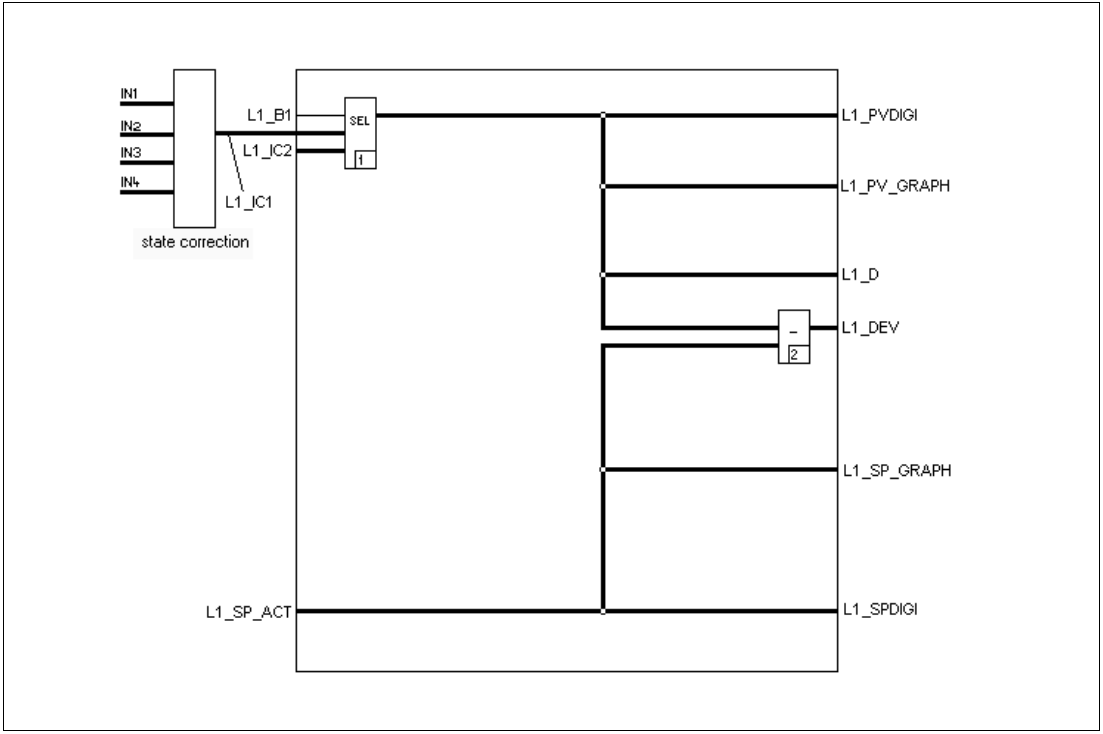

Fig.13-26 Input circuit for fixed value with additional state correction (Z-19072)
Input routing of the state correction SC1-B02-Qx
.L1_B1 Changeover IC1 <–> IC2 with switch BI01
.L1_ICx Inputs of fixed value input circuit routed via state correction
.L1_SP_ACT Current setpoint.L1_PVDIGIDigital indicator for PV
.L1_SPDIGI Digital indicator for SP.L1_PV_GRAPHAnalog indicator for PV
.L1_SP_GRAPHAnalog indicator for SP.L1_Dto derivative action
.L1_DEVControl deviation

13.12 Control outputs

The following control outputs can be configured:

Two-point controller
– with transistor output or
– with relay output
(high-low-off control e.g. Δ – Y – Off = On/Off controller with series contact)

Three-point controller (heating- off-cooling)
– with transistor output or
– with relay output
optionally 1 output also continuous (parameters L1-P25 to P27 active)

Step controller and positioner
– with transistor output or
– with relay output

Continuous controller
optionally with split-range (parameters L1-P25 to P27 are active)

In the following examples the binary outputs BO01 and BO02 are used. Of course using other BOxy is also possible.

13.12.1 Two-point controller

Single-loop controller with transistor output in the basic device

Binary definition:

BIO-B01-Q01 = 3	BIO01 is an output with NO contact operation = BO01
L1-B01-Q02 = 3	Two-point controller
L1-B10-Q04 = 1	Control output OUT1 to BO01

Two-point controller for high-low-off

Binary definition:

BIO-B01-Q01 = 3	BIO01 is an output with NO contact operation = BO01
BIO-B02-Q01= 2	BIO02 is an output with NC contact operation = BO02
L1-B01-Q02 = 3	On/Off controller with series contact
L1-B08-Q03 = 4	Alarm value 3 as Errmax series contact
L1-P93 = -3 bis -5 %	Exact value to be set in the commissioning phase
L1-B10-Q04 = 1	Control output to BO01
L1-B11-Q03 = 2	Alarm value 3 on BO02 switches from “low“ to “high“

Note If the controller is set to manual mode, the changeover to "high" is still valid.

Single-loop controller with relay output

For controllers with relay output the available outputs have to be configured accordingly.

13.12.2 Three-point controller

(Heating - off - cooling)

Single-loop controller with transistor output in the basic unit

BIO-B01-Q01 = 3	BIO01 is an output with NO contact operation = BO01
BIO-B02-Q01 = 3	BIO02 is an output with NO contact operation = BO02
L1-B01-Q02 = 5	Three-point controller
L1-B10-Q04 = 1	1st control output (heating) OUT1 to BO01
L1-B10-Q05 = 2	2nd control output (cooling) OUT2 to BO02

Three-point controller (heating - off - cooling) with continuous control output for heating

Binary definition

BIO-B01-Q01 = 3	BIO01 is an output with NO contact operation = BO01
L1-B01-Q01 = 6	
L1-B10-Q05 = 1	Switching control output (cooling) OUT2 to BO01
L1-B10-Q01 = 1	Continuous output (heating) OUT1 to AO01

Single-loop controller with relay output

For controllers with relay output the available outputs have to be configured accordingly.

13.12.3 Motorized valve control (Step controller)

When using the basic unit with optional AI02, the second measuring input can be used for position feedback or another function.

L1-B01-Q04 = 2	Position feedback to AI02

AI-B02-Q01 = 7	AI02 = 0...150 Ω

See “Service“ section for information about adjusting 0 and 100 %.

Outputs:

BIO-B01-Q01 = 3	Binary BIO01 is an output with NO contact operation = BO01
BIO-B02-Q01 = 3	Binary BIO02 is an output with NO contact operation = BO02
L1-B10-Q04 = 1	Control output “more“ OUT1 to BO01
L1-B10-Q05 = 2	Control output “less“ OUT2 to BO02

13.12.4 Positioner

A positioner is a step controller that moves an electrical actuator to a - usually externally given - position. A positioner needs a position feedback signal as measured value.

L1-B01-Q01 = 11	Positioner
L1-B03-Q01 = 1	Fixed value input circuit
L1-B04-Q01 = 1	Position feedback to AI01
L1-B05-Q06 = 2	External setpoint to AI02

Control output same as for step controller

13.12.5 Controller with relay output

It is also possible to use the relay outputs (BO03, BO04, BO05) instead of the transistor outputs BO01 and BO02.

13.12.6 Continuous controller

Continuous controllers have a 0/4...20 mA control output.

One control output (factory setting):
L1-B01-Q02 = 1
AO-B01-Q01 = 1 or 2 depending on signal range
L1-B10-Q01 = 1 1st control output OUT1 to AO01

Two control outputs (split range)
Output module in slot 1 (only one exists in the basic unit).
L1-B01-Q01 = 7
L1-B10-Q02 = 11 2nd control output to 1st output of output module in slot1
AO-B31-Q01 = 1 or 2 depending on the signal range

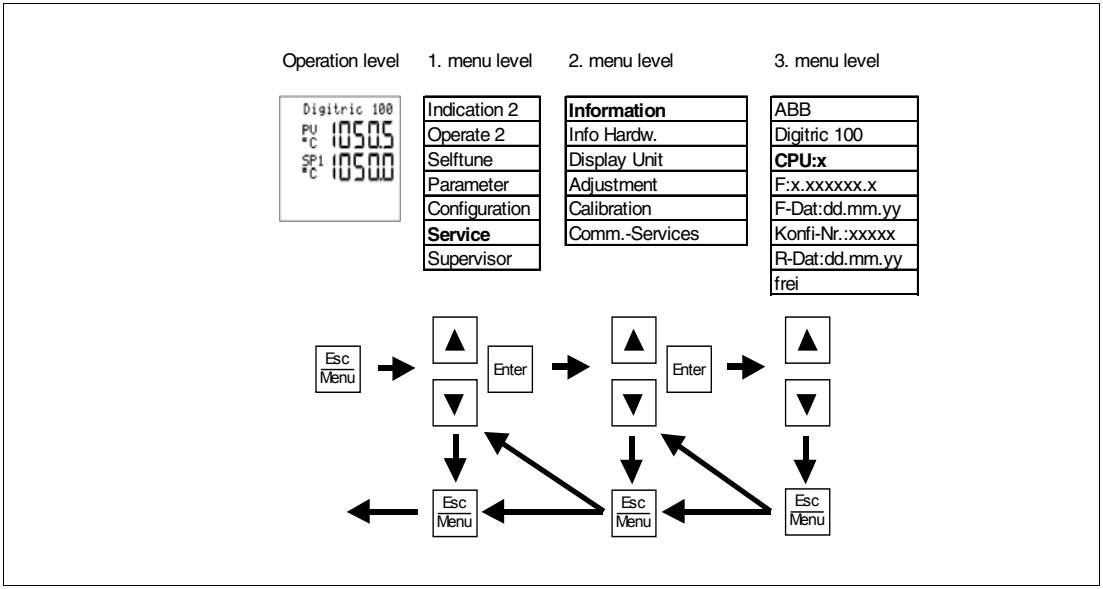

Fig.14-1 Service menu

14.1 Information (general)

This menu shows the information saved in the device by the manufacturer during the production or later during repair. The information cannot be edited by the customer.

Item	Description	Display
1	Manufacturer	ABB
2	Device type	Digitric 100
3	Board index	CPU: ...
4	Manufacturing number	F: ...
5	Manufacturing date	F-Dat: ...
6	Configuration number	Konfi-Nr..: ...
7	Repair date	Rep.-Dat: ...
8	Free text	...

14.2 Hardware information

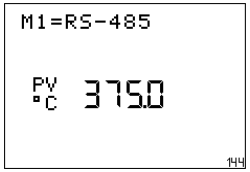

Fig.14-2 (z-20264)

Fig.14-3 (z-20265)

This window indicates the hardware configuration of the device, i.e. the module type plugged in and whether or not the optional universal input AI01 exists.

The module is not automatically available in the configuration.

It must be registered with I-B11-Q01 = 1.

14.3 Display unit

14.3.1 Contrast of the LCD

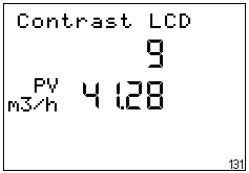

Fig.14-4
(Z-19131)

Contrast of the LCD

1. Select the desired contrast:
   (9 steps, step 1 = smallest contrast):
   <▼> <▲>
2. Accept selected changes:
   <Enter>

14.4 Adjustment

This menu is used to adjust the controller for measurement with 2-wire Pt 100 resistance thermometer and teletransmitters.

See the menu tables in Section 17 for instructions.

14.4.1 Example: Adjusting the Pt100, 2-wire, for AI01

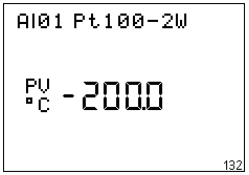

Fig.14-5 Adjustment for AI01 selected
Z-19132

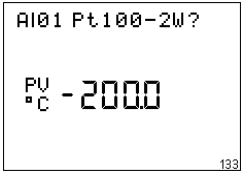

Fig.14-6 Do you want to start adjustment?
Z-19133

Warning

Do not adjust with open input!

Adjustment is selected separately for the individual inputs of the basic unit and the modules.

Submenu item AIxy Pt100-2W can be selected only if Pt 100 2-wire-measurement has been configured for the respective input before.

Procedure

0. Shorten the cable between the sensor and the controller on the sensor side.

The controller indicates the set default value in the bottom line.

1. Call 1st adjustment on the controller:
<Enter>
"?" in the first line is added.

Enter ☼

2. Start adjustment:
<Enter>

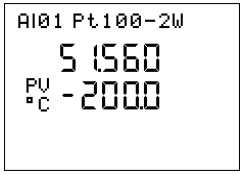 Fig.14-7 Z-19134	Upon completion of the adjustment the message „“AIxy adjusted“ appears in the text line for 3 seconds, and an adjustment value is written in the first line of the display and then saved. Enter ● This completes adjustment. 3. Exit adjustment menu: <Esc> 4. **Undo the short circuit on the sensor!**

14.4.2 Example: Adjusting a teletransmitter, 1500 ohms, on AI01

The menu items for teletransmitter adjustment can be selected only if the respective input has been configured for “teletransmitter“ or for “0/4... 20 mA“. The adjustment procedure is the same in both cases. The adjustment is always required when the teletransmitter or a measuring signal (e.g. position feedback) cannot be used fully as a valid measuring value.

Application
Position feedback with potentiometer via teletransmitter input (AI01 or Pt100 module for 3-wire/4-wire circuitry or via current input AI02, 0...20 mA.

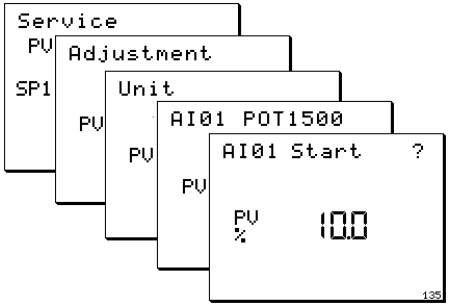

Fig.14-8
Z-19135

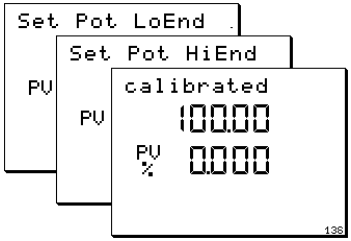

Fig.14-9
Z-19136

Zero adjustment

1. Select the adjustment function from the Service menu by actuating <Enter> several times.

The message „AI01 Start“ prompts you to set the teletransmitter mechanically to its initial position.

2. Set the teletransmitter mechanically to its initial position.
3. Confirm the message “AI01 Start“ with <Enter> .

Adjustment is carried out, and the message “AI01 End“ appears.

End value adjustment

4. Set the teletransmitter mechanically to its end position.
5. Confirm the message “AI01 End“ with <Enter>.

The message “AI01 calibrated!“ indicates that you are returned to the next higher operating level.

Press <Esc> to return to the main operating level.

14.5 Calibration

Refer to the tables in Section 17 for the complete calibration routines.

Note

The inputs and outputs are calibrated in factory. Recalibrating is only required in some exceptional cases.

The calibration routine is used to calibrate the two inputs of the basic unit. External transmitters with the appropriate accuracy are required for this.
When calling up the calibration routine, you can select input AI01 or AI02 of the basic unit for calibration for the configured type of measurement.

The exact measuring values in the specified ranges must be applied to the terminals. Press <▼> and <▲> to set the display to the applied value and then confirm with <Enter>.

Example: Calibrating mA-input AI01

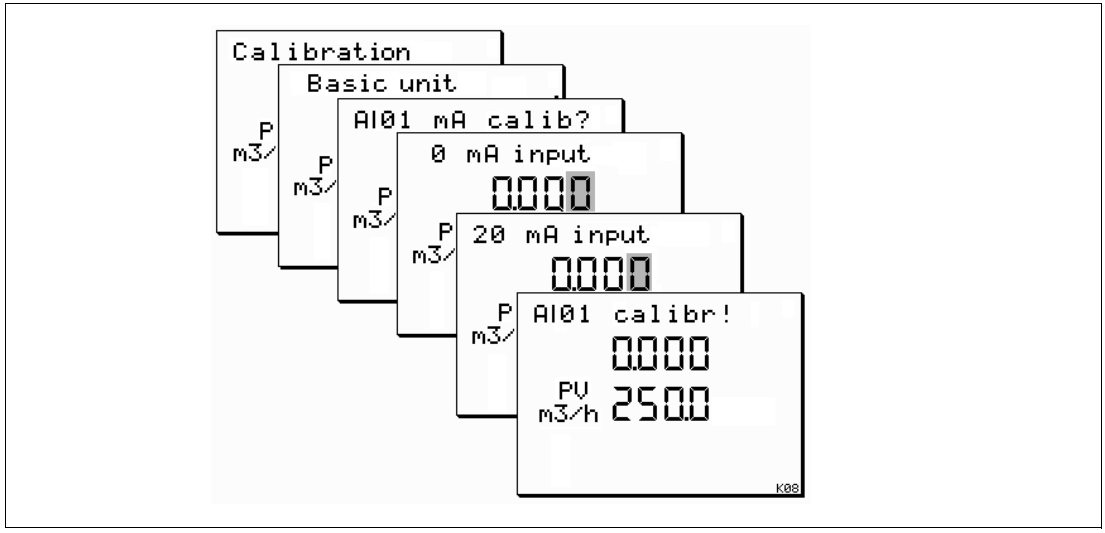

Fig.14-10 Calibrating mA-input AI01
Z-19075

15 Supervisor

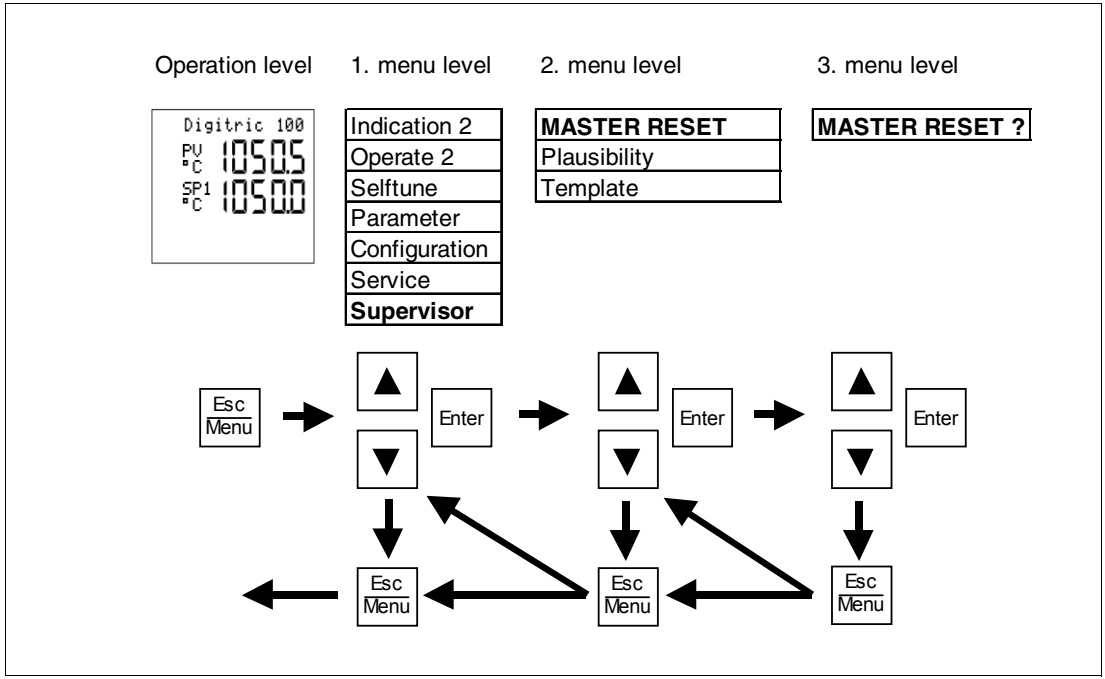

Fig.15-1

15.1 Plausibility

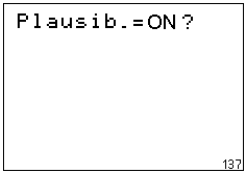

Fig.15-2 Activating the plausibility check
Z-19137

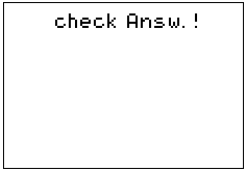

Fig.15-3 Message upon exit from the configuration mode
Z-19138

The plausibility check function is used to check the entries made in the configuration mode for correctness and completeness.

After selecting the plausibility function, the system prompts you to activate or deactivate the plausibility check.

1. Toggle between questions:
   <▼>, <▲>

Enter

2. Confirm question:
   Enter ☼

The question mark will disappear.

Enter ●

With active plausibility function the message seen in Fig.15-3 appears when you exit the configuration mode.

15.2 Master reset

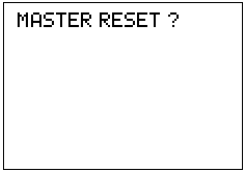

Fig.15-4 Configuration and master reset
Z-19139

With the master reset function you can reset the entire configuration to the factory setting.

Caution
The master reset function will overwrite all user-set configuration data with the factory setting. Only the language setting will remain as is.

1. Select the master reset menu

Upon selection of the menu item you will be asked whether or not the factory setting is to be restored (Fig.15-4).

Enter ☼

Either

2. Confirm question:
   <Enter>

"?" will be replaced with "!". The factory setting will be restored, messages on the screen indicate the progress of the procedure. You will be returned to the operation level automatically.

Enter ●

or

3. Cancel:
   <Esc>

15.3 Template (Quick configuration)

The “Template“ menu is used for quick configuration of the controller. This function helps you to realize pre-defined settings quickly. See the “Quick configuration“ section of this manual for details.

Similar to the master reset function the template function sets the controller to a pre-defined configuration without the necessity to use the configuration menu.
Note that with this function all user-defined parameters and configuration data will be overwritten and, thus, lost!

A 5-digit character string and some additional answers can be entered in the template menu.
Example: **100A0**

This means the template menu allows for a quick configuration of the controller. The configuration data loaded with this function can be further modified in the configuration menu if required.
Parameters can be set as usual in the “Parameter“ menu.

Refer to Section 16 for details about the template.

16 Quick configuration in the Template menu

Prior to executing the template first make sure that the controller is set to English user language. Otherwise, set it to English (see Section 16.1 for details) or use the German or French operating instructions instead. Since the controller is usually set to the German language ex factory, you might set it to English language.

The template available under the Supervisor/Template menu item is used for quickly configuring the Digitric 100 controller. See Fig. 16-1 for details about how to select the template. Section 16.2 describes how to navigate through the template. Possible entries are described in Section 16.3.

A 5-digit template variant is the core of the template.
The first digit defines the base variant of the controller configuration. See Section 16.4 for an overview of the possible variants.

The second digit is the sub variant for the controller configuration. See Section 16.5 for an overview of the possible variants.

The third digit is the alarm variant of the controller configuration. See Section 16.6 for an overview of the possible variants.

The fourth digit defines the type of universal controller input AI01.
The fifth digit defines the type of optional universal controller input AI02.
See Section 16.7 for an overview of the possible variants.

Upon execution of the template the controller is booted with the new configuration.

Warning **The previous configuration and parameter settings will be overwritten and cannot be restored.**

The configuration can be further optimized in the Configuration menu, if required. It is, for example, possible to change the valve action from “Reverse“ (default setting in the template) to “Direct“.

The parameter settings can be further optimized in the Parameters menu.

2-wire Pt 100 resistance thermometers and resistance teletransmitters (potentiometers) usually require further adjustment under “Service/Adjustment“.

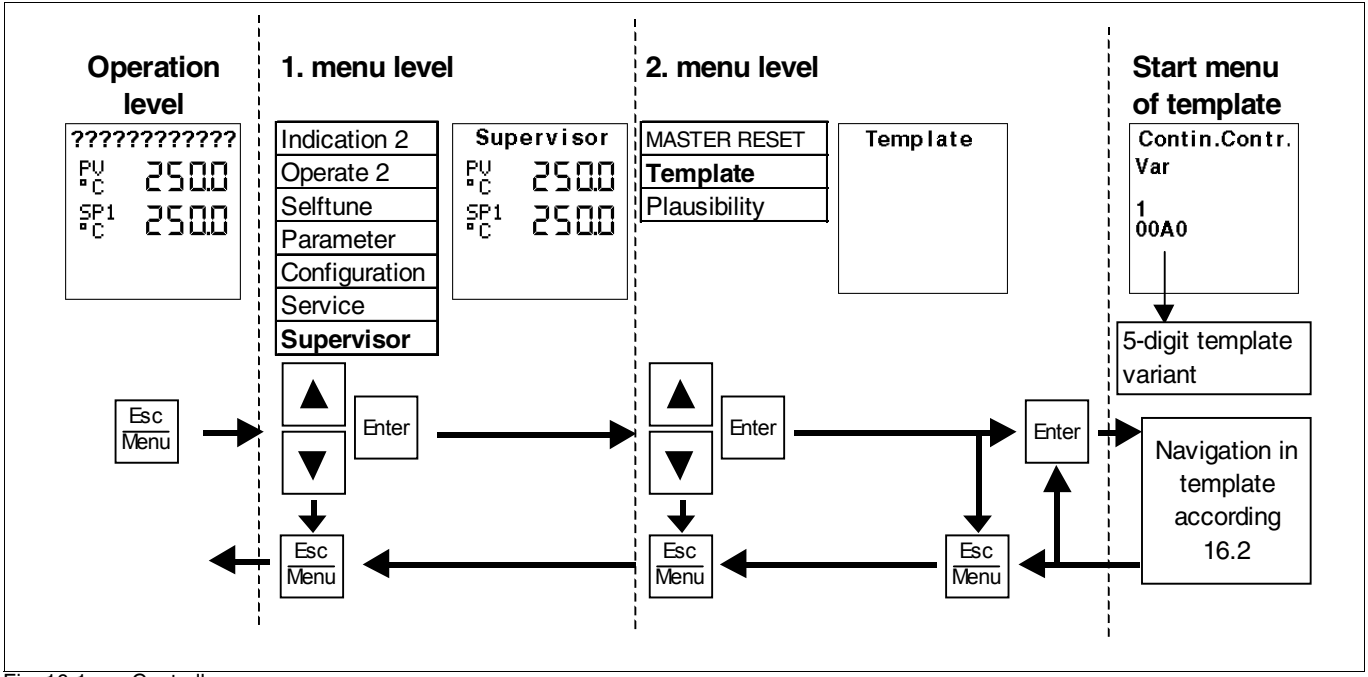

Fig. 16-1 Controller menu

16.1 Setting the controller to the desired language

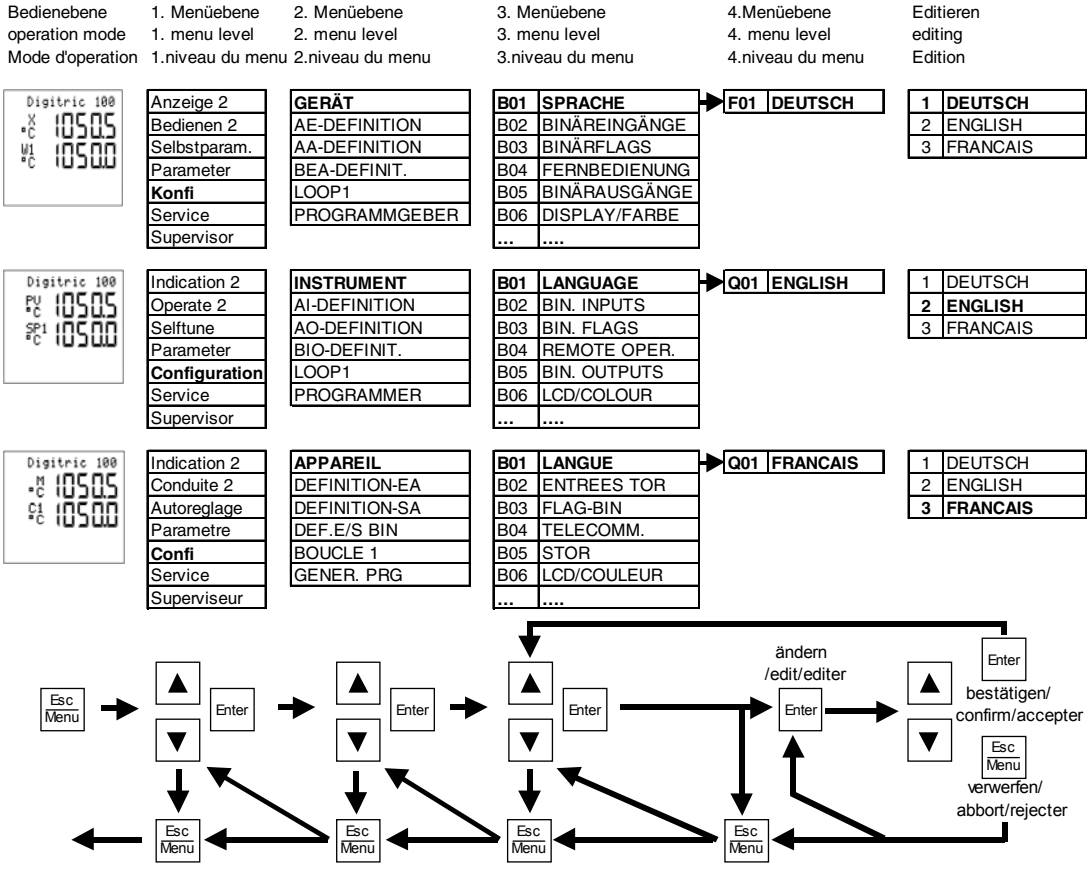

16.2 Navigating through the template

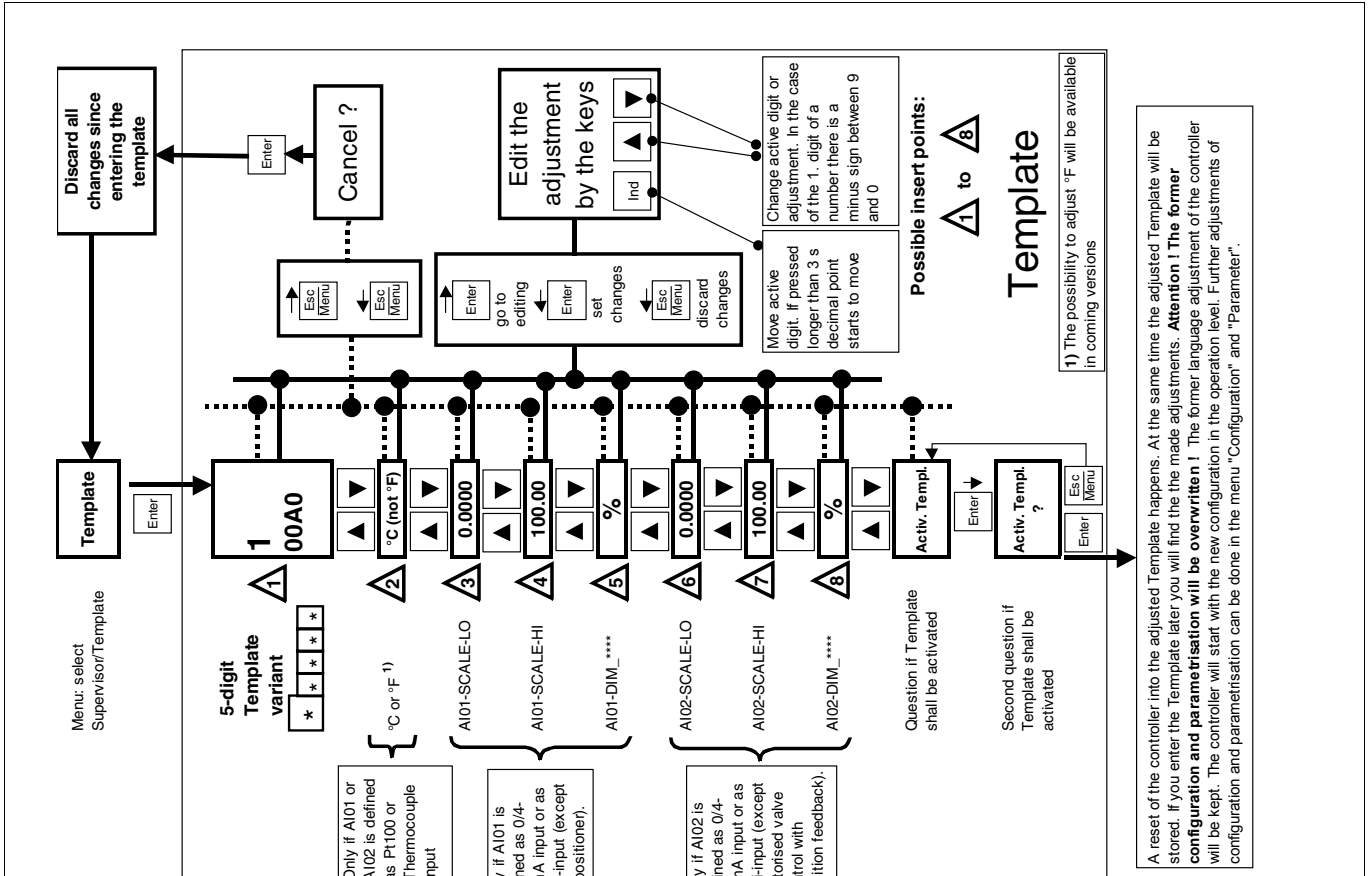

Insert point	Present ?	Effect of input	Choices of input
1	Yes, always	The 5-digit Template variant defines the configuration of the controller. The Template must be chosen to suit the required control	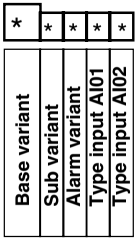
2	Only if AI01 or AI02 are defined as Pt100 or thermocouple input	Defines if temperatures are measured in °C or °F	°C (not °F) °F (not °C) 1)
3	Only if AI01 has been defined by the 4. digit of the Template variant as 0/4-20mA input or as poti-input (except positioner)	Start value of scale AI01, that means measured value for 0 or 4 mA at the input AI01. AI01-SCALE-LO	Number between -9999 and 99999, decimal point can be moved
4		End value of scale AI01, that means measured value for 20 mA at the input AI01. AI01-SCALE-HI	
5		Dimension (units) of the value measured at AI01 AI01-DIM_****	**** = dimen. / **** = dimen. 0 none / 12 pH 2 % / 13 mm 3 °C / 14 m 4 °F / 15 m/h 5 mbar / 16 mV 6 bar / 17 V 7 m3/h / 18 mA 8 kg/h / 19 A 9 t/h / 20 s 10 l/h / 21 Hz 11 hl/h / 22 kHz
6	Only if AI02 has been defined by the 5. digit of the Template variant as 0/4-20mA input or as poti-input (except motorised valve control with position feedback)	Start value of scale AI02, that means measured value for 0 or 4 mA at the input AI02. AI02-SCALE-LO	Number between -9999 and 99999, decimal point can be moved
7		End value of scale AI02, that means measured value for 20 mA at the input AI02. AI02-SCALE-HI	
8		Dimension (units) of the value measured at AI02 AI02-DIM_****	Same as insert point 5

1) The possibility to adjust °F will be available in coming versions

Table of Base variants (1.digit in 5-digit Template-code)

Base variant / type control	Control scheme	Notes for parametrisation: Adjusting of PI parameters	Notes for parametrisation: Adjusting of specific parameters of the chosen control type
* * * * *	PI-control, analog outputs 4-20 mA, scaled on 0 to 100%, one internal set point SP1, manual/automatic mode to be switched via key. The manual characteristic is for controllers with one control output OUT(1) "direct", for controllers with dual outputs OUT2/OUT1 it is "inverse-direct". The automatic characteristic is "inverse".		
1 **Continuous controller**	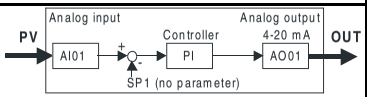	Parametrisation OUT or OUT1: Gain: **Para/Loop1/1=value** factory setting: G=1 Reset time Tr **Para/Loop1/2=value** factory setting: Tr=0.1min	none
2 **On/Off controller** (time proportioned relay output)	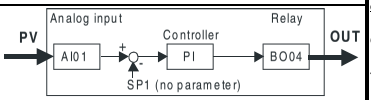		Switches/minute OUT1: **Para/Loop1/57=value** factory setting: 6/min
3 **Heat-0-Cool control (3-point)** with 2 relay outputs	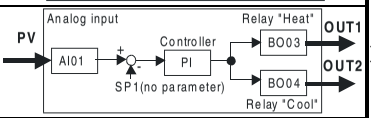		Switches/minute OUT1: **Para/Loop1/57=value** factory setting: 6/min Switches/minute OUT2: **Para/Loop1/58=value** factorysetting: 6/min
4 **Heat-0-Cool control** with relay (Cool) and analog output (Heat)	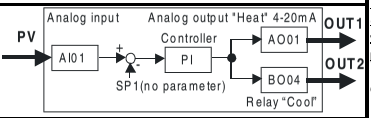	Parametrisation OUT2 (not for motorised valve control and positioner): Gain: **Para/Loop1/25=value** factory setting G=1 Reset time Tr: **Para/Loop1/26=Wert** factory setting: Tr=0.1min	Switches/minute OUT2: **Para/Loop1/58=value** factory setting: 6/min
5 **Motorised valve control with 2 relay outputs** (for electric actuator)	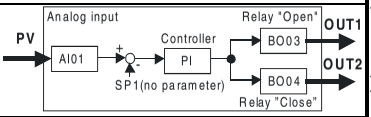		Minimum On-time of relay outputs: **Para/Loop1/56=value** factory setting:0,05 s
6 **Positioner** (motorised valve control with position feedback being the PV)	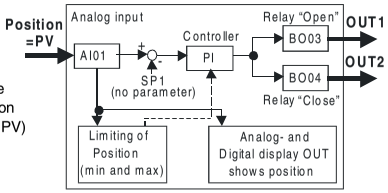	Dead zone (in% of scale) **Para/Loop1/55=value** If |ERR| < Dead zone, OUT will be frozen (important for motorised valve control + positioner, both relays will be "open")	Minimum On-time of relay outputs (factory setting=0,05 s) **Para/Loop1/56=value** position minimum: **Para/Loop1/67=Min.** position maximum: **Para/Loop1/68=Max.**
7 **Split range control with 2 analog outputs** (only with additional module AO3_mA)	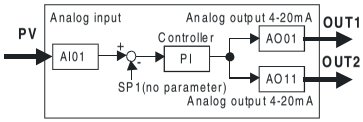		none
8 **Ratio station**	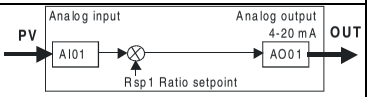	none	Set point ratio limits in **Para/Loop1/115 + 116**
9 **Setpoint station**	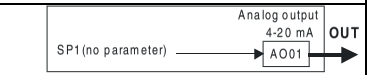	none	The scaling of the (unused) input AI01 will be used for scaling of the output AO01
10 **Alarm station** with binary or relay outputs	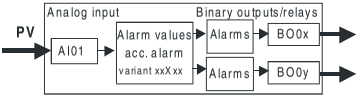	none	Alarm values and hysteresis have to be parametrised. See alarm variants xxCxx, xxDxx, xxIxx and xxJxx

Table of Sub variants (2.digit of 5-digit Template-code)

Sub variant/ extension * (*) * * *	The base control (Base variant) will be extended or modified according the chosen Sub variant . With "?" marked or striped elements are according the chosen Base variant	Additonal parametrisation	Limitations
0	**No Extras.** The Base variant will not be modified at all **See Base variant**	-	-
A	**Additional external set point at AI02.** This SPext exists in addition to the internal setpoint SP1. For Base variant 8 there will be instead of set points SPext and SP1 the Ratio set points Rspext and Rsp1 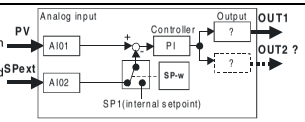	-	**Not possible for Base variant 10. The instrument must be equiped with AI02**
B	**Ratio control A/B, display Rpv, Rsp in%.** The value A will be controlled in that manner, that a set ratio to a measured value B will be achieved.The display shows the ratios Rpv and Rsp in % 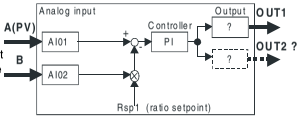	Ratio setpoint-limiting: minimum: **Para/Loop1/115=Min.** maximum: **Para/Loop1/116=Max.**	**Not possible for Base variants 8, 9 and 10. The instrument must be equiped with AI02**
C	**Ratio control A/(A+B), display Rpv, Rsp in%.** The value A will be controlled in that manner, that a set ratio to the sum of A and a measured value B will be achieved.The display shows the ratios Rpv and Rsp in % 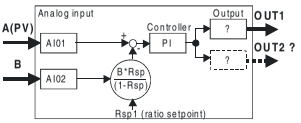		
D	**Process value as linear combination of 2 measured values** Out of the measured values at the inputs AI01 and AI02 a set point can be calculated by following equation: **PV=CONST1*IC1+ CONST2*(IC2+100*CONST3)** 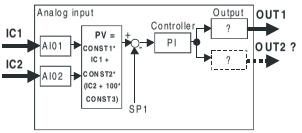	Constant 1: **Para/Loop1/101=value** Constant 2: **Para/Loop1/102=value** Constant 3: **Para/Loop1/103=value** Note: Also negativ values are possible	**Not possible for Base variants 6, 9 and 10. The instrument must be equiped with AI02**
E	**Process value as multiplication of 2 measured values** The process value will be calculated out of 2 measured values at the inputs AI01 and AI02 according the equation: **PV=IC1*(IC2+100*CONST3)** 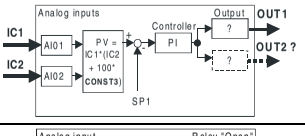	Constante 3: **Para/Loop1/103=Wert** Note: Also negativ values are possible	
F	**position feedback for motorised valve control (Base variant 5) on AI02.** The position of the electric actuator (valve, butterfly valve etc.) is measured at AI02. The position is visible at the controller and can be limited. 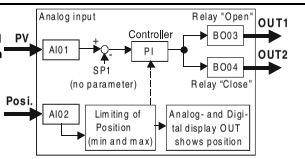	Limiting of position position minimum: **Para./Loop1/67=Min.** position maximum: **Para./Loop1/68=Max.** Note: The values of Min and Max relate to the scaling of AI02.	**Only possible for Base variant 5. The instrument must be equiped with AI02**

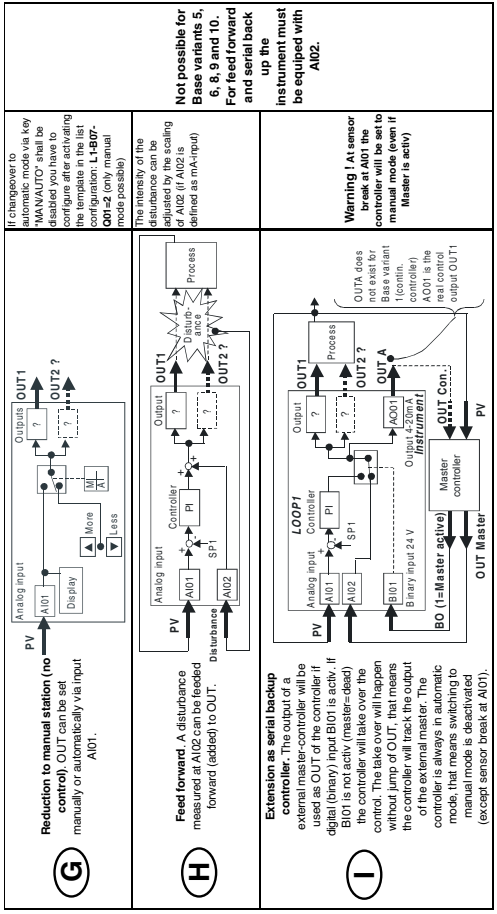
G
Reduction to manual station (no control). OUT can be set manually or automatically via input AI01.
PV
Analog input
AI01
Display
More
Less
Outputs
OUT1
OUT2 ?
If changeover to automatic mode via key 'MAN/AUTO' shall be disabled you have to configure after activating the template in the list configuration: L1-B07-Q01=2 (only manual mode possible)
H
Feed forward. A disturbance measured at AI02 can be feeded forward (added) to OUT.
Analog input
AI01
AI02
Disturbance
Controller
PI
SP1
Output
OUT1
OUT2 ?
Disturb-ance
Process
The intensity of the disturbance can be adjusted by the scaling of AI02 (if AI02 is defined as mA-input)
Not possible for Base variants 5, 6, 8, 9 and 10. For feed forward and serial back up the instrument must be equipped with AI02.
I
Extension as serial backup controller. The output of a external master-controller will be used as OUT of the controller if digital (binary) input BI01 is activ. If BI01 is not activ (master=dead) the controller will take over the control. The take over will happen without jump of OUT, that means the controller will track the output of the external master. The controller is always in automatic mode, that means switching to manual mode is deactivated (except sensor break at AI01).
LOOP1
Controller
Analog input
AI01
AI02
Binary input 24 V
BI01
BO (1=Master active)
Master controller
OUT Master
Output 4-20mA (instrument)
AO01
OUT Con.
OUTA does not exist for Base variant 1(contin. controller) AO01 is the real control output OUT1
Warning ! At sensor break at AI01 the controller will be set to manual mode (even if Master is activ)

Table of Alarm variants (3.digit in 5-digit Template-code)

Alarm variant (* * * * *)		Scheme of Alarms connected to digital outputs	Parametrisation	Limitations
0	No alarms on Digital outputs.	-	-	Not for Base variant 10
A	**Alarms to BO05 (Relay NO-contact)**	**Collective alarm PVmin, PVmax, ERRmin, ERRmax to one digital output.** The digital output will be activated if PV < PVmin **(AL1)** PV > PVmax **(AL2)** PV < SP-ERRmin **(AL3)** X > SP+ERRmax **(AL4)** The deactivation happens with a hysteresis H	**Para./Loop1/91 = PVmin** factory setting: -9999 **Para./Loop1/92 = PVmax** factory setting:+99999 **Para./Loop1/93 = ERRmin** factory setting: +99999 **Para./Loop1/94 = ERRmax** factory setting:+99999 **Para./Loop1/95 = Hysteresis** factory setting:1.0000	**Not possible for: xBxxx xCxxx xGxxx 9xxxx 10xxxx**
B	**Alarms to BO02 (24V Trans-istor)**			
C	**Alarms PVmin1 and PVmax1 to BO03. Alarms PVmin2 and PVmax2 to BO05**	**Alarm PVmin1 and PVmax1 to BO0x. Alarm PVmin2 and PVmax2 to BO0y.** The digital output BO0x will be activated if: PV < PVmin1 **(AL1)** PV > PVmax1 **(AL2)** The digital output BO0y will be activated if: PV < PVmin2 **(AL3)** PV > PVmax2 **(AL4)** The deactivation happens with a hysteresis H	**Para./Loop1/91 = PVmin1** factory setting: -9999 **Para./Loop1/92 = PVmax1** factory setting:+99999 **Para./Loop1/93 = PVmin2** factory setting: -9999 **Para./Loop1/94 = PVmax2** factory setting:+99999 **Para./Loop1/95 = Hysteresis** factory setting:1.0000	**Not possible for: 3xxxx 5xxxx 6xxxx 9xxxx xBxxx xCxxx**
D	**Alarms PVmin1 and PVmax1 to BO01. Alarms PVmin2 and PVmax2 to BO02**			**Not possible for: 9xxxx xBxxx xCxxx xIxxx**
E	**Alarms ERRmin1 and ERRmax1 to BO03. Alarms ERRmin2 and ERRmax2 to BO05**	**Alarm ERRmin1 and ERRmax1 to BO0x. Alarm ERRmin2 and ERRmax2 to BO0y.** The digital output BO0x will be activated if: PV < SP - ERRmin1 **(AL1)** PV > SP + ERRmax1 **(AL2)** The digital output BO0y will be activated if: PV < SP - ERRmin2 **(AL3)** PV > SP + ERRmax2 **(AL4)** The deactivation happens with a hysteresis H	**Para./Loop1/91 = ERRmin1** factory setting: +99999 **Para./Loop1/92 = ERRmax1** factory setting:+99999 **Para./Loop1/93 = ERRmin2** factory setting: +99999 **Para./Loop1/94 = ERRmax2** factory setting:+99999 **Para./Loop1/95 = Hysteresis** factory setting:1.0000	**Not possible for: 3xxxx 5xxxx 6xxxx 9xxxx 10xxxx xBxxx xCxxx xGxxx**
F	**Alarms ERRmin1 and ERRmax1 to BO01. Alarms ERRmin2 and ERRmax2 to BO02**			**Not possible for: 9xxxx 10xxxx xBxxx xCxxx xGxxx xIxxx**

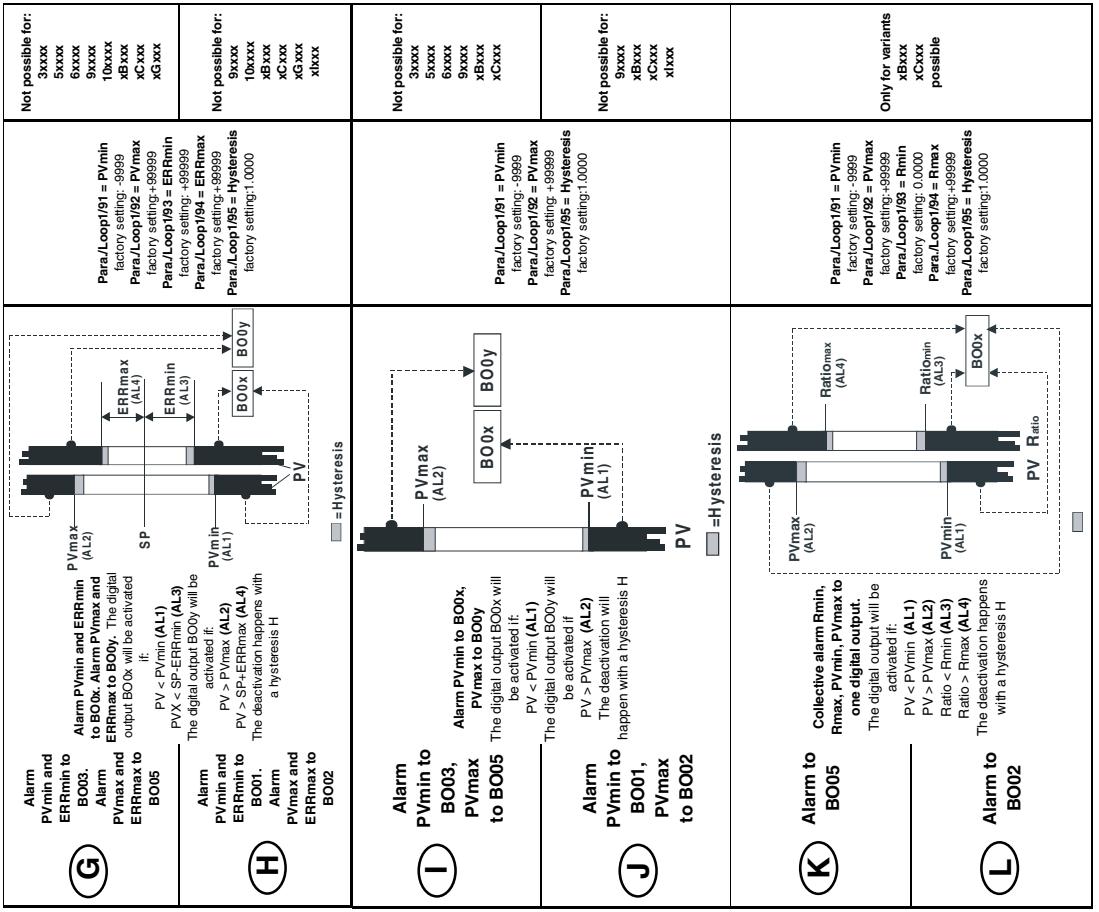
G
Alarm PVmin and ERRmin to BO03. Alarm PVmax and ERRmax to BO05
Alarm PVmin and ERRmin to BO03. Alarm PVmax and ERRmax to BO05 will be activated if:
PV < PVmin (AL1)
PVX < SP-ERRmin (AL3)
The digital output BO0y will be activated if:
PV > PVmax (AL2)
PV > SP+ERRmax (AL4)
The deactivation happens with a hysteresis H
PVmax (AL2)
SP
PVmin (AL1)
ERRmax (AL4)
ERRmin (AL3)
BO0x
BO0y
PV
=Hysteresis
Para./Loop1/91 = PVmin
factory setting: -9999
Para./Loop1/92 = PVmax
factory setting:+99999
Para./Loop1/93 = ERRmin
factory setting: -99999
Para./Loop1/94 = ERRmax
factory setting:+99999
Para./Loop1/95 = Hysteresis
factory setting:1.0000
Not possible for:
3xxxx
5xxxx
6xxxx
9xxxx
10xxxx
xBxxx
xCxxx
xGxxx
H
Alarm PVmin and ERRmin to BO01. Alarm PVmax and ERRmax to BO02
Alarm PVmin and ERRmin to BO01. Alarm PVmax and ERRmax to BO02 will be activated if:
PV < PVmin (AL1)
PVX < SP-ERRmin (AL3)
The digital output BO0y will be activated if:
PV > PVmax (AL2)
PV > SP+ERRmax (AL4)
The deactivation happens with a hysteresis H
Not possible for:
9xxxx
10xxxx
xBxxx
xCxxx
xGxxx
xIxxx
I
Alarm PVmin to BO03, PVmax to BO05
Alarm PVmin to BO03, PVmax to BO05 will be activated if:
PV < PVmin (AL1)
The digital output BO0y will be activated if:
PV > PVmax (AL2)
The deactivation will happen with a hysteresis H
PVmax (AL2)
PVmin (AL1)
BO0x
BO0y
PV
=Hysteresis
Para./Loop1/91 = PVmin
factory setting: -9999
Para./Loop1/92 = PVmax
factory setting: +99999
Para./Loop1/95 = Hysteresis
factory setting:1.0000
Not possible for:
3xxxx
5xxxx
6xxxx
9xxxx
xBxxx
xCxxx
Not possible for:
9xxxx
xBxxx
xCxxx
xIxxx
J
Alarm PVmin to BO01, PVmax to BO02
K
Alarm to BO05
Collective alarm Rmin, Rmax, PVmin, PVmax to one digital output.
The digital output will be activated if:
PV < PVmin (AL1)
PV > PVmax (AL2)
Ratio < Rmin (AL3)
Ratio > Rmax (AL4)
The deactivation happens with a hysteresis H
PVmax (AL2)
PVmin (AL1)
Ratiomax (AL4)
Ratiomin (AL3)
BO0x
PV Rratio
Para./Loop1/91 = PVmin
factory setting: -9999
Para./Loop1/92 = PVmax
factory setting:+99999
Para./Loop1/93 = Rmin
factory setting: 0.0000
Para./Loop1/94 = Rmax
factory setting:+99999
Para./Loop1/95 = Hysteresis
factory setting:1.0000
Only for variants
xBxxx
xCxxx
possible
L
Alarm to BO02

Type of analog input AI01 (4.digit of Template-code)

Type analog input AI01 * * * * *	
A	4-20 mA — This is the only possible variant for setpoint station
B	0-20 mA
C	Thermocouple type B (0 to 1800°C = 32 to 3272°F)
D	Thermocouple type D (0 to 2300°C = 32 to 4172°F)
E	Thermocouple type E (-200 to 1000°C=-328 to 1832°F)
F	Thermocouple type J (-200 to 1200°C=-328 to 2192°F)
G	Thermocouple type K (-200 to 1400°C= -328 to 2552°F)
H	Thermocouple type L (-200 to 1000°C= -328 to 1832°F)
I	Thermocouple type R (0 to 1700°C = 32 to 3092°F)
J	Thermocouple type S (0 to 1800°C = 32 to 3272°F)
K	Thermocouple type T (-200 to 400°C=-328 to 752°F)
L	Thermocouple type U (-200 to 600°C=-328 to 1112°F)
M	Pt 100 2-wire (-200 to +200°C=-328 to 392°F)
N	Pt 100 2-wire (-200 to +800°C=-328 to 1472°F)
P	Pt 100 3-wire (-200 to +200°C=-328 to 392 °F)
Q	Pt 100 3-wire (-200 to +800°C=-328 to 1472°F)
T	Poti 150Ohm (75-200 Ohm)
U	Poti 1500Ohm (750-2000 Ohm)

Type of analog input AI02 (5.digit of Template-code)

Type analog input AI02 * * * * *	Limitations
0	No input AI02 — Can only be chosen if the variant doesn't use the analog input AI02
A	4-20 mA — Digitric 100 must be equiped with optional input AI02. The choice is only possible if the chosen variant uses the analog input AI02.
B	0-20 mA
C	Thermocouple type B (0 to 1800°C = 32 to 3272°F)
D	Thermocouple type D (0 to 2300°C = 32 to 4172°F)
E	Thermocouple type E (-200 to 1000°C=-328 to 1832°F)
F	Thermocouple type J (-200 to 1200°C=-328 to 2192°F)
G	Thermocouple type K (-200 to 1400°C= -328 to 2552°F)
H	Thermocouple type L (-200 to 1000°C= -328 to 1832°F)
I	Thermocouple type R (0 to 1700°C = 32 to 3092°F)
J	Thermocouple type S (0 to 1800°C = 32 to 3272°F)
K	Thermocouple type T (-200 to 400°C=-328 to 752°F)
L	Thermocouple type U (-200 to 600°C=-328 to 1112°F)
M	Pt 100 2-wire (-200 to +200°C=-328 to 392°F)
N	Pt 100 2-wire (-200 to +800°C=-328 to 1472°F)
P	Pt 100 3-wire (-200 to +200°C=-328 to 392 °F)
Q	Pt 100 3-wire (-200 to +800°C=-328 to 1472°F)
R	Pt 100 4-wire (-200 to +200°C= -328 to 392 °F)
S	Pt 100 4-wire (-200 to +800°C=-328 to 1472°F)
T	Poti 150Ohm (75-200 Ohm)
U	Poti 1500Ohm (750-2000 Ohm)

Note: If you choose thermocouple inputs, the internal compensation will be active

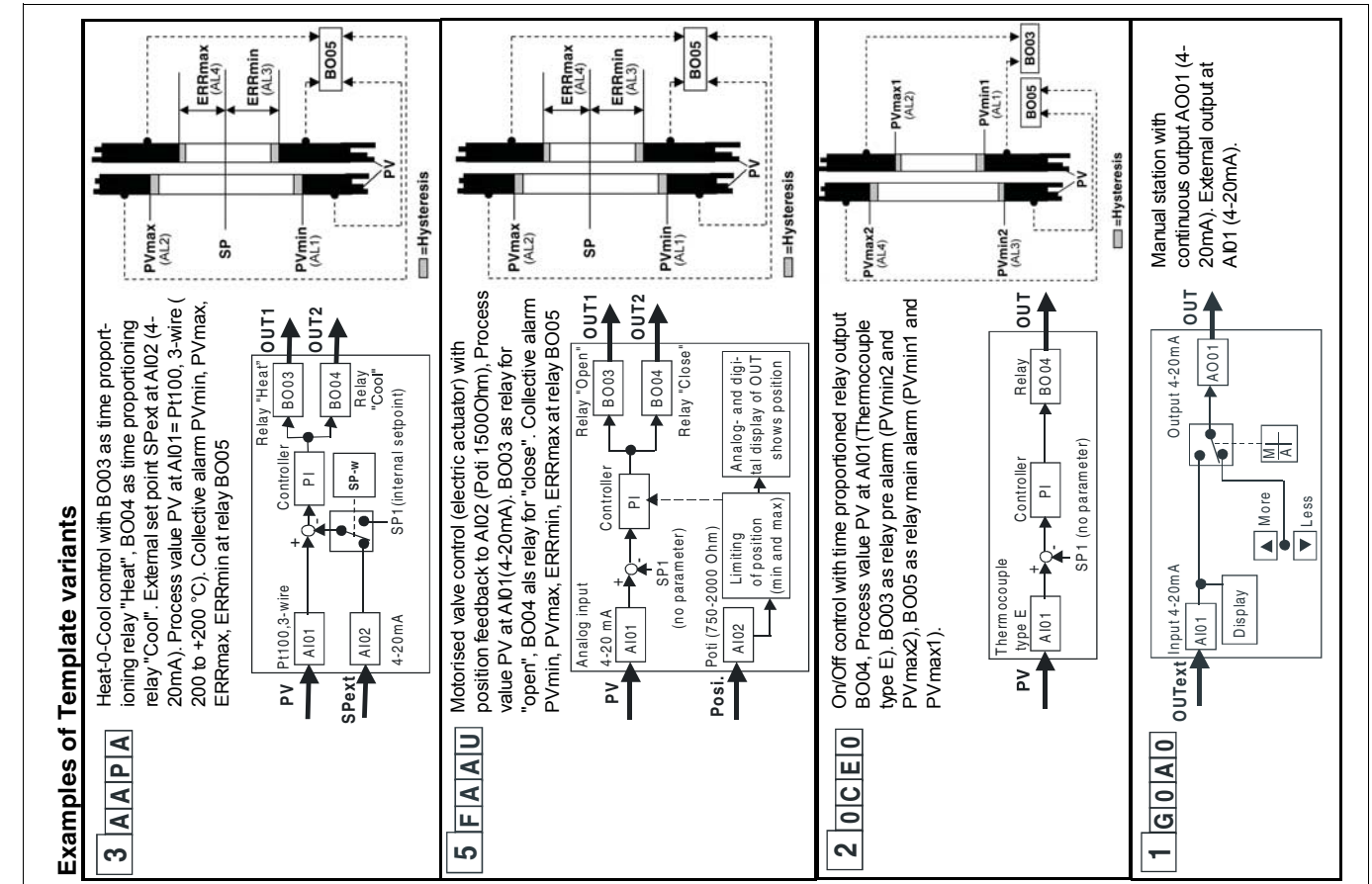
Examples of Template variants
3 A A P A
Heat-0-Cool control with BO03 as time proportioning relay "Heat", BO04 as time proportioning relay "Cool". External set point SPext at AI02 (4-20mA). Process value PV at AI01= Pt100, 3-wire (200 to +200 °C). Collective alarm PVmin, PVmax, ERRmax, ERRmin at relay BO05
PV
SPext
Pt100,3-wire
AI01
AI02
4-20mA
Controller
PI
SP-W
SP1 (internal setpoint)
OUT1
OUT2
Relay "Heat"
Relay "Cool"
BO03
BO04
PVmax (AL2)
SP
PVmin (AL1)
ERRmax (AL4)
ERRmin (AL3)
BO05
PV
=Hysteresis
5 F A A U
Motorised valve control (electric actuator) with position feedback to AI02 (Poti 1500Ohm), Process value PV at AI01(4-20mA). BO03 as relay for "open", BO04 als relay for "close". Collective alarm PVmin, PVmax, ERRmin, ERRmax at relay BO05
Analog input
4-20 mA
Poti (750-2000 Ohm)
Posi.
Limiting of position (min and max)
SP1 (no parameter)
Relay "Open"
Relay "Close"
Analog- and digital display of OUT shows position
2 0 C E 0
On/Off control with time proportioned relay output BO04, Process value PV at AI01(Thermocouple type E). BO03 as relay pre alarm (PVmin2 and PVmax2), BO05 as relay main alarm (PVmin1 and PVmax1).
Thermocouple type E
PVmax1 (AL2)
PVmin1 (AL1)
PVmax2 (AL4)
PVmin2 (AL3)
1 G 0 A 0
OUText
Input 4-20mA
Output 4-20mA
AO01
Display
More
Less
Manual station with continuous output AO01 (4-20mA). External output at AI01 (4-20mA).

17 Tables for menus: Indication2/Operate2/Selftune/Service/Supervisor

1.menu	2.menu	3. menu level	4. menu level /description	description

Indication2		Indication2	Indication2	Indication2	Indication2	Indication2	Indication2	Indication2
Indication2	In/outputs	In/outputs	In/outputs	In/outputs	In/outputs	In/outputs	In/outputs	In/outputs
	In/outputs: AI01	Each in/output of the controller which a) exists and b) is recognised and assigned and c) is in the configuration activated can be chosen here. The actual value of the chosen in/output will be displayed. Example: **AI01 105.36 °C**						
	In/outputs: AI02							
	In/outputs: AIxy							
	In/outputs: AO01							
	In/outputs: AOxy							
	In/outputs: BI01							
	In/outputs: BIxy							
	In/outputs: BO01							
	In/outputs: BOxy							
Indication2	actual PID-Parameters	actual PID-Parameters		actual PID-Parameters				
	act. PID-Par.: G	Display of the actual value of the Gain G of the controller (proportional)						
	act. PID-Par.: Tr	Display of the actual value of the reset time Tr of the controller (integral)						
	act. PID-Par.: Td	Display of the actual value of the derivative time Td of the controller (derivative)						
	act. PID-Par.: MR	Display of the actual value of the manual reset MR of the controller						
Indication2	Identification	Identification	Identification	Identification	Identification	Identification	Identification	
	Identificatio: Input circuit	The adjustment of CONFI/LOOP1/B03/Q01 will be displayed						
	Identificatio: Control function	The adjustment of CONFI/LOOP1/B01/Q01 will be displayed						
	Identificatio: Controller output	The adjustment of CONFI/LOOP1/B01/Q02 will be displayed						
Indication2	Lib.ver:3.x.y	Lib.ver:3.x.y	Lib.ver:3.x.y	Lib.ver:3.x.y	Lib.ver:3.x.y	Lib.ver:3.x.y	Lib.ver:3.x.y	
	The library version of the IBIS R+ software (PC) belonging to the actual controller firmware will be displayed							
	Fw.Vers:01.2yz	Fw.Vers:01.2yz	Fw.Vers:01.2yz	Fw.Vers:01.2yz	Fw.Vers:01.2yz			
	The firmware version in the controller will be displayed							
Indication2	Indication Parameter	Indication Parameter	Indication Parameter	Indication Parameter				
	Display of all parameters which are defined in the menu PARAMETER (parameters 1 to 199).							

1.menu	2.menu	3. menu level	4. menu level /description	description

Operate 2	Operate 2	Operate 2	Operate 2	Operate 2	Operate 2	Operate 2
local/remote		local/remote	local/remote	local/remote	local/remote	local/remote
Operate 2	loc/rem	only local	Only local operation via controller front possible			
		remote>local ?	Changeover from remote to local operation via <Enter>			
		local>remote ?	Changeover from local to remote operation via <Enter>			

Selftune	Selftune	Selftune	Selftune	Selftune	Selftune	Selftune
Selftune	no Selftune	Access to seftune is disabled. It can be enabled by CONFI/LOOP1/B01/Q05=1. Parametrisation of the selftune in PARAMETER/LOOP1/125 to 128				
	cancel Selft.?	Only visible while selftune is running				
Selftune	Start Selft.?	Selftune can be started by <Enter>. After finalisation you will see blinking: "Selft. ready !". By <Esc> then <Enter> the display will show you: "Selft. > Gain". With <⇑> and <⇓> you can step through following displays:	Selft. > Gain	display and editing of calculated G		
			Selft. >Tr	display and editing of calculated Tr		
			Selft. >Td	display and editing of calculated Td		
			accept -> 1?	by <Enter> writing in parameter set 1		
			accept -> 2?	by <Enter> writing in parameter set 2		
			System par.	Shows the calculated control system parameters: Gs, Tu,Tg.		

1.menu	2.menu	3. menu level	4. menu level /description	description		
Service	Service	Service	Service	Service	Service	Service
Service	Information	Information	Information	Information	Information	Information
		ABB	company name			
		Digitric 100	Device name, Digitric 100			
		CPU:x	CPU version, e.g. x=A			
		F:x.xxxxxx.x	Production number, e.g.: F:6.850291.6			
		F-Dat:dd.mm.yy	Production date			
		Confi-No.:xxxxx	Configuration number: 00000=standard ; xxxxx= if custom configuration by factory			
		R-Dat:dd.mm.yy	Repair date			
		empty	unused			
Service	Info HardWare	Info HardWare	Info HardWare	Info HardWare	Info HardWare	Info HardWare
	Info HardWare	M1= _ _ _ _ _	Modules assembled in the controller will be shown. Modules can be e.g.: - RS-232/485 - AO3-mA - AI2-mAmA i - BO4-RELAIS - ProfibusDP - . . . . . The module is not ready for the Configuration in general. In fact it has to be either in CONFI/INSTRUMENT/B12/Q01 manualy assigned or via CONFI/INSTRUMENT/B11/Q01=1 automatically recognised and assigned.			
		AI02= _ _ _ _ _	AI02 exists	The optional universal input AI02 is present (assembled on main board)		
			No AI02	The optional universal input AI02 is not present (not assembled on main board)		
Service	Display Unit	Display Unit	Display Unit	Display Unit	Display Unit	Display Unit
		Contrast LCD	0 to 9	Adjustment of the contrast at the LCD display		

1.menu	2.menu	3. menu level	4. menu level /description	description
Service	Adjustment	Basic unit	AI01 n.adjust.	Adjustment only possible if AI01 is configured as Pt100 2-wire oder teletransmitter (Poti).
			AI01 Pt100-2W Adjustment of analog input AI01 if configured as Pt-100 2-wire	Warning: don't do a adjustment with open input ! Connect the Pt100 (2 wire) cables to the controller input AI01. Disconnect the Pt100 at the sensor from the connection cables, then connect the two cables (only the connection cable resistance at the input now). Start the adjustment. After adjusting you will see for 3 seconds the message "AI01 adjusted".
			AI01 POT1500 Adjustment of analog input AI01 if configured as teletransmitter 1500Ohm	Connect teletransmitter (poti 750 to 2000 Ohm) to AI01. Then start adjustment. Request: "Set Pot LoEnd", that means bring poti in start position.Then confirm with <Enter>. After request: "Set Pot HiEnd" bring poti in end position. Confirm with <Enter>. Important: the resistance in start position has to be smaller than in end position.
			AI01 POT150	see AI01 POT1500 (only difference: the resistance has to be 75 to 200 Ohm)
			AI02 n.adjust.	Adjustment only possible if AI02 is configured as Pt100 2-wire oder teletransmitter (Poti).
			AI02 Pt100-2W Adjustment of analog input AI02 if configured as Pt-100 2-wire	Warning: don't do a adjustment with open input ! Connect the Pt100 (2 wire) cables to the controller input AI02. Disconnect the Pt100 at the sensor from the connection cables, then connect the two cables (only the connection cable resistance at the input now). Start the adjustment. After adjusting you will see for 3 seconds the message "AI02 adjusted".
			AI02 POT1500 Adjustment of input AI02 if configured as tele-transmitter 1500Ohm (only Digitric	Connect teletransmitter (poti 750 to 2000 Ohm) to AI02. Then start adjustment. Request: "Set Pot LoEnd", that means bring poti in start position.Then confirm with <Enter>. After request: "Set Pot HiEnd" bring poti in end position. Confirm with <Enter>. Important: the resistance in start position has to be smaller than in end position.
			AI02 POT150	See AI02 POT1500 (but overall resistance of poti: 75 to 200 Ohm)
		Slot 1	For Pt-100 2wire identic as in basic unit but with analog Input AIxy (Use pins at module). Teletransmitters at the modul AI2_PT_3/4W cannot be adjusted. The adjustment must there be done by changing starting point of scale [CONFI/AI-Definition/Bxy/P05= $-y_{close}*100/(y_{open}-y_{close})$] and end point of scale [CONFI/AI-Definition/Bxy/P06=$(100*(100-y_{close}))/(y_{open}-y_{close})$].	

1.menu	2.menu	3. menu level	4. menu level /description	description
Service	Calibration	Calibration	Calibration	Calibration
		Warning!	In normal cases there is no need for any calibration as our devices are exactly calibrated ex factory. If you do a incorrect calibration the controller will be useless. If you are unsure give your device to ABB for calibration.	
		Basic unit	**AI01 mA calib?** Calibration of analog input AI01 if configured as 0(4)-20 mA input	Connect a precision current provider to the input for current measurement then start calibraton. After request "0 mA input", adjust current to 0 mA then confirm with <Enter>. After further request "20 mA input", adjust current to 20 mA, then confirm with <Enter>. Note: The currents 0 or 20 can be edited (in small limits). Limits: 0mA :-1 to 5 mA ; 20 mA: 15 to 22 mA.
			AI01 Pt calib? Calibration of analog input AI01 if configured as Pt 100 input	Connect a precision resistance provider to the inputs. Digitric 100: connect pins 6+7 with one end, pins 9 with the other end of the resistance. Note: If you use cables the resistance of the cable from pin 6 to the resisitor must be the same as the cable from pin 9 to the resistor. Start calibration. After request "0 Ohm input", adjust resistance to 0 Ohm, then confirm with <Enter>. There will be further requests for 200 and 400 Ohm. Please adjust them and confirm with <Enter>. Note: The resistances can be edited (in small limits). Limits: 0 Ohm: 0-1 Ohm ; 200 Ohm: 180-220 Ohm ; 400 Ohm: 360-450 Ohm.
			AI01 Pot calib? Calibration of analog input AI01 if configured as teletransmitter input	Connect a precision resistance provider to the inputs for 4 wire. Digitric 100: connect pins 6+7 with one end, pins 9 with the other end of the resistance. Note: If you use cables the resistance of the cable from pin 6 to the resisitor must be the same as the cable from pin 9 to the resistor. Start calibration. After request "0 Ohm input", adjust resistance to 0 Ohm, then confirm with <Enter>. There will be further requests for 200 and 2000 Ohm. Please adjust them and confirm with <Enter>. Note: The resistances can be edited (in small limits). Limits: 0 Ohm: 0-1 Ohm ; 200 Ohm: 180-220 Ohm ;2000 Ohm: 2000-2200 Ohm.

1.menu	2.menu	3. menu level	4. menu level /description	description
Service	Calibration		**AI01 mV calib?** Calibration of analog input AI01 if configured as thermocouple input	Connect a precision mV provider to the inputs for thermocouple. Digitric 100: pin 7="+", pin 9= "-"), then start calibration. After request "-10 mV input", adjust voltage to -10 mV, then confirm with <Enter>. After second request "80 mV input", adjust voltage to 80 mV, then confirm with <Enter>. Note: the voltage -10mV and 80 mV can be edited (in small limits). Limits: -10 mV: -10 to -5 V ; 80 mV: +60 to +85 mV
			AI02= mA calib? Calibration AI02 if 0(4)-20 mA input	see calibration of AI01 but use connection pins for Input AI02. Digitric 100: pin 12="+", pin 13= "-")
Service	Calibration		**AI02 Pt calib?** Calibration of analog input AI02 if configured as Pt 100 input	Connect a precision resistance provider to the inputs. Digitric 100: connect pins 10+11 with one end, pins 9+13 with the other end of the resistance. Note: If you use cables the resistance of the cable from pin 10 to the resisitor must be the same as the cable from pin 9 to the resistor. Start calibration. After request "0 Ohm input", adjust resistance to 0 Ohm, then confirm with <Enter>. There will be further requests for 200 and 400 Ohm. Please adjust them and confirm with <Enter>. Note: The resistances can be edited (in small limits). Limits: 0 Ohm: 0-1 Ohm ; 200 Ohm: 180-220 Ohm ; 400 Ohm: 360-450 Ohm.

1.menu	2.menu	3. menu level	4. menu level /description	description	
Service	Service Calibration		**AI02 Pot calib?** Calibration of analog input AI02 if configured as teletransmitter input	Connect a precision resistance provider to the inputs. Digitric 100: connect pins 10+11 with one end, pins 9+13 with the other end of the resistance. Note: If you use cables the resistance of the cable from pin 10 to the resisitor must be the same as the cable from pin 9 to the resistor. Start calibration. After request "0 Ohm input", adjust resistance to 0 Ohm, then confirm with <Enter>. There will be further requests for 200 and 2000 Ohm. Please adjust them and confirm with <Enter>. Note: The resistances can be edited (in small limits). Limits: 0 Ohm: 0-1 Ohm ; 200 Ohm: 180-220 Ohm ;2000 Ohm: 2000-2200 Ohm.	
			AI02 mV calib? Calibration of analog input AI02 if configured as thermocouple input	Connect a precision mV provider to the inputs for thermocouple. Digitric 100: pin 11="+", pin 13= "-"), then start calibration. After request "-10 mV input", adjust voltage to -10 mV, then confirm with <Enter>. After second request "80 mV input", adjust voltage to 80 mV, then confirm with <Enter>. Note: the voltage -10mV and 80mV can be edited (in small limits). Limits: -10 mV: -10 to -5 V ; 80 mV: +60 to +85 mV	
			AO01= mA calib? Calibration of analog output Ao01 (0/4-20mA)	Connect analog output AO01 (mA) to analog input AI01 (mA). That means connect pin 8 with 14 and pin 9 with 15:. Then start calibration (0 and 20 mA will be calibrated). Other values than 0 and 20 can be edited. Limits: omA: 0 to 5 mA ; 20 mA: 15 to 22 mA. For correwct calibaration of AO01, the analog input AI01 has to be calibrated exactly.	
		Slot1	Analog inputs on modules cannot be calibrated in the controller. If necessary contact ABB for calibration of single modules.		
	Comm.- Service	**Comm.- Service**		**Comm.- Service**	**Comm.- Service**
Service	Com.-Ser.	**Modbus**	**Service FC: __**	Shows function code of the last Modbus service	Service FC: 00000, means there had been no communication. The time difference will then show 00000
			Timediff./sec	Shows time since the last Modbus service	
		ProfibusDP	**Service FC: __**	Shows function code of the last Profibus service	
			Timediff./sec	Shows time since the last Profibus service	

1.menu	2.menu	3. menu level	4. menu level /description	description
Supervisor		Supervisor	Supervisor	Supervisor
Supervisor	Plausibility	Plausib. =OFF	After pressing of <Enter> you will receive the request "Plausib =ON ?". After confirmation with <Enter> the controller is set on "Plausib = ON".	Plausibility=ON means that there is plausibility check activ. That means only plausible configurations and parametrisations will be accepted.
		Plausib. =ON	After pressing of <Enter> you will receive the request "Plausib =OFF?". After confirmation with <Enter> the controller is set on "Plausib = OFF".	
Supervisor	MASTER RESET	After pressing of <Enter> you will receice the request "MASTER RESET ?". After confirmation with <Enter> the controller will be reseted to the factory preset. (Warning: all configuration and parametrisation is gone)		
	Template	After pressing of <Enter> you will get into the "Template" The Template allows you a very fast configuration of the controller based on a 5-digit code Xxxxx. You will get full instruction in the paragraph "Template". Warning: if you activate the template all former configuration and parametrisation is gone.		

18 Tables for the configuration menu

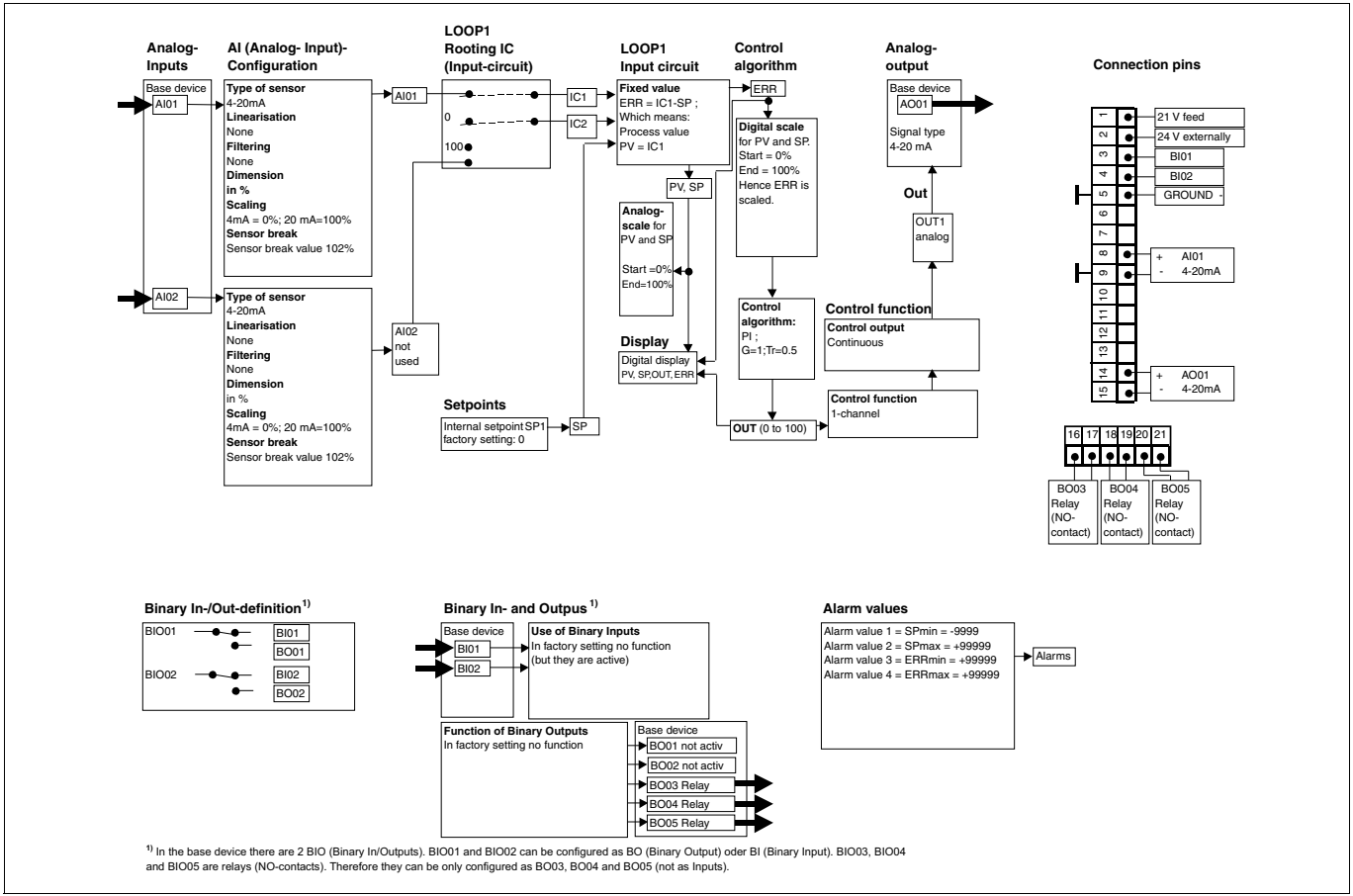

1) In the base device there are 2 BIO (Binary In/Outputs). BIO01 and BIO02 can be configured as BO (Binary Output) oder BI (Binary Input). BIO03, BIO04 and BIO05 are relays (NO-contacts). Therefore they can be only configured as BO03, BO04 and BO05 (not as Inputs).

Fig. 18-1 Digitric 100 Factory setting

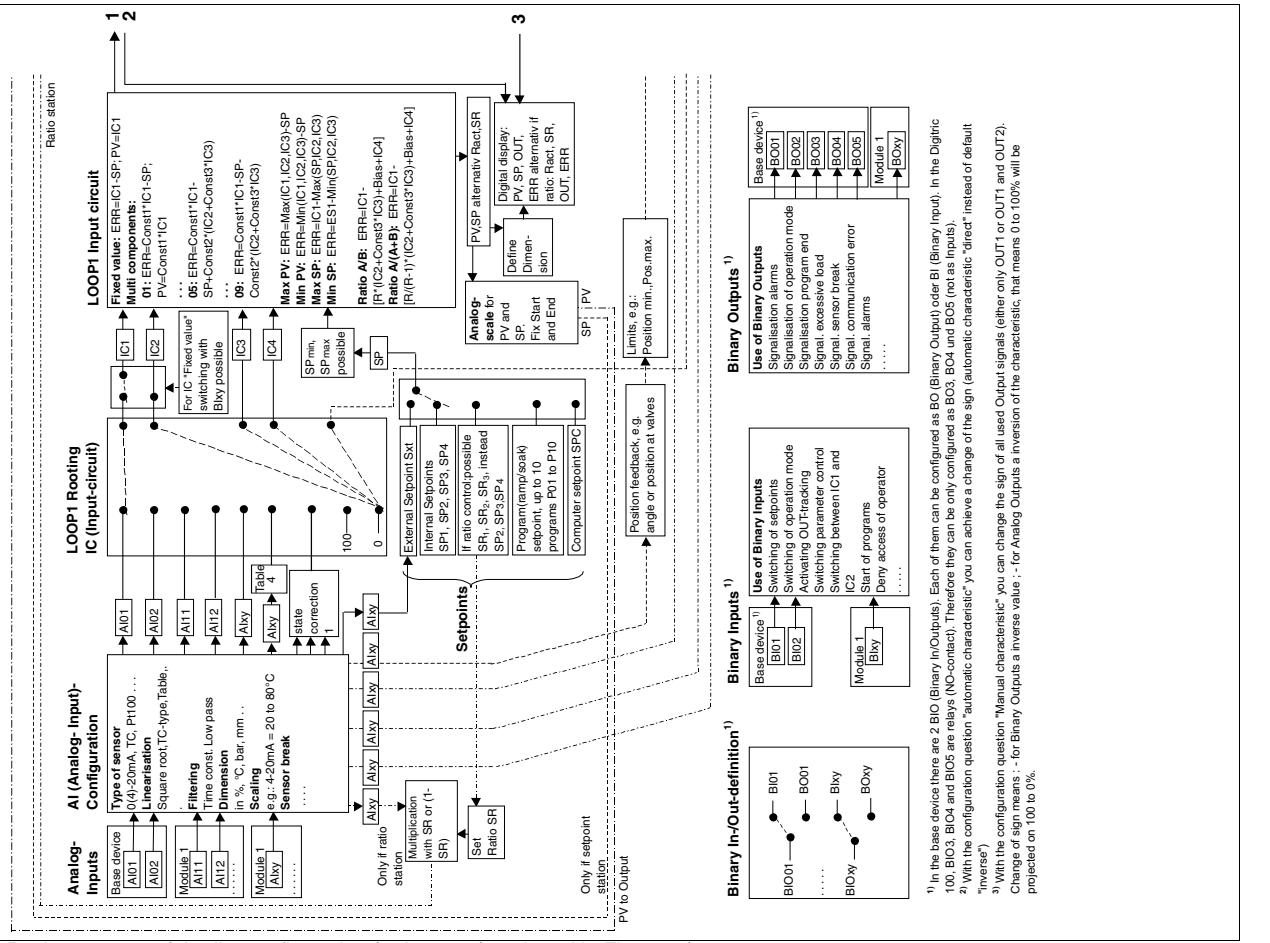

1) In the base device there are 2 BIO (Binary In/Outputs). Each of them can be configured as BO (Binary Output) oder BI (Binary Input). In the Digitric 100, BIO3, BIO4 and BIO5 are relays (NO-contact). Therefore they can be only configured as BO3, BO4 und BO5 (not as Inputs).

2) With the configuration question "automatic characteristic" you can achieve a change of the sign (automatic characteristic "direct" instead of default "inverse")

3) With the configuration question "Manual characteristic" you can change the sign of all used Output signals (either only OUT1 or OUT1 and OUT2). Change of sign means : - for Binary Outputs a inverse value ; - for Analog Outputs a inversion of the characteristic, that means 0 to 100% will be projected on 100 to 0%.

Fig. 18-2 Basic structure of the list configuration for Loop 1 (continued in Fig. 18-3)

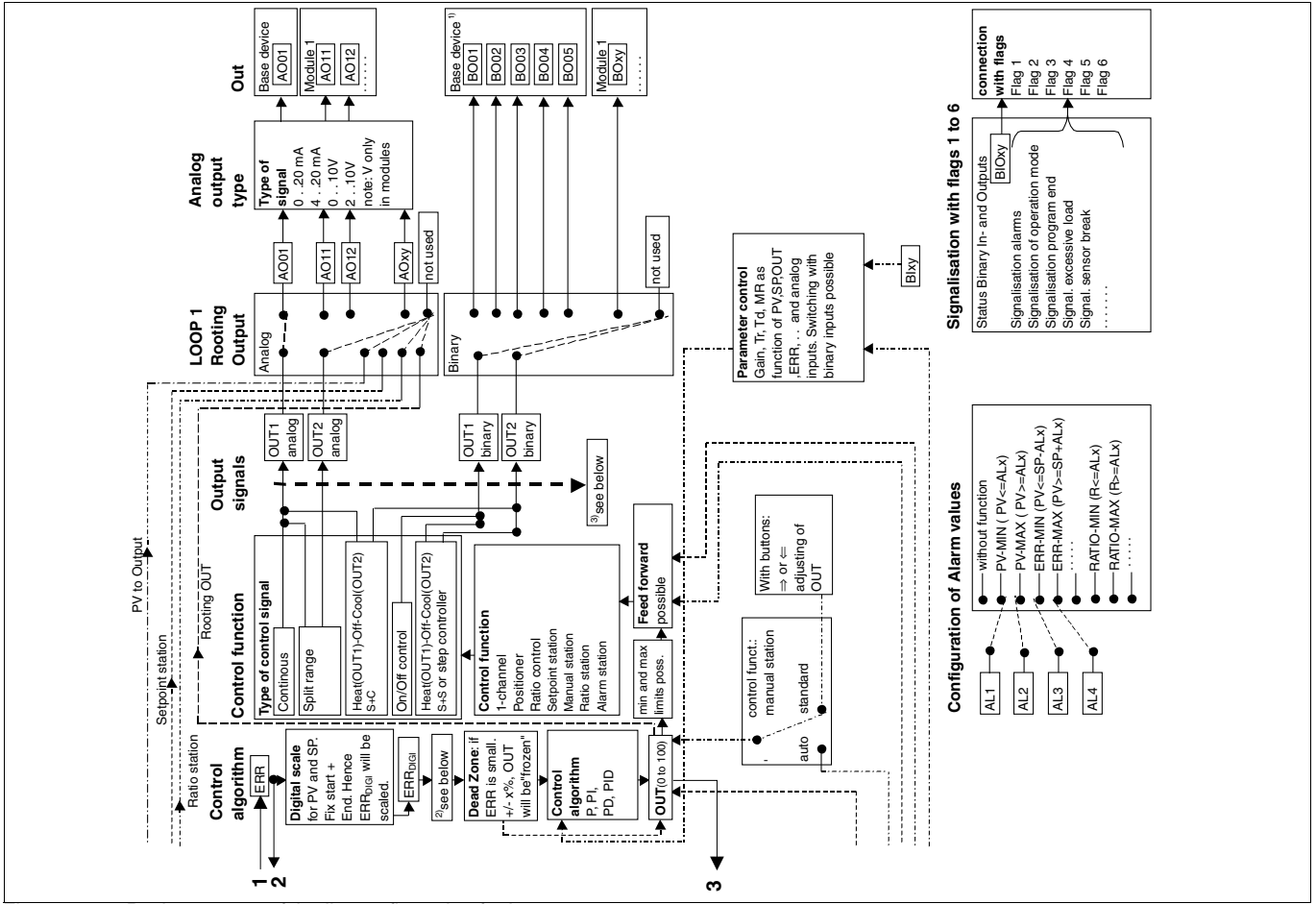

Fig. 18-3 Basic structure of the list configuration for Loop 1, part 2

1.menu 2.menu	mod-ule	question / parameter	settings		description
CONFIGURATION INSTRUMENT			CONFIGURATION INSTRUMENT		CONFIGURATION INSTRUMENT
CONFIGURATION INSTRUMENT	B01 LANG-UAGE	Q01 Language	1	**DEUTSCH**	**German texts**
			2	ENGLISH	English texts
			3	FRANCAIS	French texts
			4	. . . . .	. . . . .
CONFIGURATION INSTRUMENT	B02 BINARY INPUTS	Q01 Locking of parameter definitions and confi. levels	0	**LOCK PAR OFF**	**No locking**
			1	LOCK PAR=BI01	Locking with BI01
			2	LOCK PAR=BI02	Locking with BI02
			xy=11 to 16	LOCK PAR=BIxy	Locking with BIxy
		Q02 Locking of all operator interventions	0	**LOCK OP=BIOFF**	**No locking of operator interventions**
			1	LOCK OP=BI01	with BI01
			2	LOCK OP=BI02	with BI02
			xy=11 to 16	LOCK OP=BIxy	with BIxy
		Q03 Alarm acknowledge-ment with binary input	0	**NO ALM:QUIT**	**No alarm acknowledgement with binary input**
			1	QUIT ALM=BI01	with BI01
			2	QUIT ALM=BI02	with BI02
			xy=11 to 16	QUIT ALM=BIxy	with BIxy
		Q04 Locking of the menu key	0	**LockMenu OFF**	**No locking of the menu key**
			1	LockMenu.BI01	with BI01
			2	LockMenu.BI02	with BI02
			xy=11 to 16	LockMenu.BIxy	with BIxy
CONFIGURATION INSTRUMENT	B03 BINARY FLAGS	Q01 Flag1 connected with binary-input/output	0	**FLAG1_BX_OFF**	**Flag 1 not connected**
			1	FLAG1_BX01	Flag 1 connected to BI01 or BO01
			y=2 to 5	FLAG1_BX0y	Flag 1 connected to BI0y or BO05
			xy=11 to 16	FLAG1_BXxy	Flag 1 connected to BIxy or BOxy
		Q02 to Q06	Configuration for flag 2 to 5, identic to flag1		
CONFIGURATION INSTRUMENT	B04 REMOTE OPERATION	Q01 Local/Remote	1	**LOCAL OPER.**	**Local operation of unit only**
			2	LOC/REM OP.	Local operation of unit or via port. Changeover in operation 2
			3	REMOTE OPER.	Local operation via port only
			4	LOCAL + REMOTE	Local operation equally on unit or via port
CONFIGURATION INSTRUMENT	B05 BINARY OUTPUTS	Q01 Self-test	0	**SELFTST=NO BO**	**No output**
			1	SELFTEST=BO01	BO01
			y = 2 to 5	SELFTEST=BO0y	BO0y
			xy=11 to 16	SELFTEST=BOxy	BOxy
		Q02 Error in telegram communi-cations	0	**COM_ERR=NO BO**	**No output**
			1	COM_ERR=BO01	BO01
			y = 2 to 5	COM_ERR=BO0y	BO0y
			xy=11 to 16	COM_ERR=BOxy	BOxy
CONFIGURATION INSTRUMENT	B06 DISPLAY	Q01 Base color	0	**COLOR GREEN**	**Color green**
			1	COLOR RED	Color red
		Q02 Changing color via BI/BO	0	**COL.CHA.OFF**	not connected to BI/BO
			1	COL.CHA.BX01	via BI/BO01
			xy=2 to 5	COL.CHA.BXxy	via BI/BOxy
			xy=11 to 16	COL.CHA.BXxy	via BI/BOxy
		Q03 Flashing color if color change is active	0	**NO FLASH**	No flashing of color
			1	1 SECOND	Color changes each second
			2	2 SECONDS	Color changes each 2 seconds
			3	5 SECONDS	Color changes each 5 seconds
			4	10 SECONDS	Color changes each 10 seconds

1.menu	2.menu	mod-ule	question / parameter	settings		description
CONFIGURATION	INSTRUMENT	**B10** ALARM HANDLING	**Q01** Alarm indication (on the display)	**0**	**TXT/ALARM-OFF**	**Alarm texts are not displayed on front panel**
				1	TXT/ALARM-ON	Alarm texts are displayed
			Q02 Alarm acknow-ledgement	**0**	**QUIT_OFF**	**No acknowledgement necessary**
				1	QUIT_SINGLE	Only the displayed alarm is acknowledged
				2	QUIT_ALL	All alarms are acknowledged
CONFIGURATION	INSTRUMENT	**B11** USED MODULS	**Q01** Module assignment	**0**	**B12:MANUAL**	**Modules have to be entered manually (see Instrument-B12)**
				1	B12: AUTOMATIC	Unit starts a scan procedure to recognise the assembled modules (This takes 1 second, the you will see again Q01=0)
CONFIGURATION	INSTRUMENT	**B12** SET MODULE TYPE	**Q01** Slot 1	**0**	**M1=UNUSED**	**empty**
				2	M1=RS485	Serial interface
				4	M1=ProfibusDP	Profibus module
				10	M1=AI4-mV	4 x thermocouple / mV
				15	M1=AI2-mAmA i	2 x mA with galvanic isolation
				16	M1=AI2-mAmV i	1 x mA + 1 x thermocouple with galvanic isolation
				17	M1=AI2-mVmA i	1 x thermocouple + 1 x mA with galvanic isolation
				18	M1=AI2-mVmV i	2 x thermocouple with galvanic isolation
				20	M1=AI4-mA p	4 x mA with electronic isolation
				24	M1=AI4-f/t	Frequency or time measurement
				30	M1=AI4-Pt-2L	4 x Pt100 2-wire circuit
				35	M1=AI4-Pt-3/4	2 x Pt100 3/4-wire circuit
				40	M1=AO3-V	Output 3 x V
				50	M1=AO3-mA	Output 3 x 20 mA
				60	M1=BIO6-BIN	6-fold binary input/output
				70	M1=BO4-RELAIS	Output 4 x relays
CONFIGURATION	INSTRUMENT	**B20** PASSWORD	**Q01** Password protection	**0**	**PASSWORD_OFF**	**Password protection is not active**
				1	PASSWORD_ON	Password protection is activated
				2	PASSWORD_TIME	Password protection is active, but will be inactived for 30 s after returning to the operating display
			P02 Enter Password	**Input**	**PASSWORD _ _ _ _ _**	**Enter your password (5 digits, change digit with the INT-key). Default: 0**
CONFIGURATION	INSTRUMENT	**B30** COMMUNICATION	**P01** Modbus adress	**x = 1 to 127**	**MODBUS adress 1 to 127**	**Device adress for Modbus (00 = global adress ; 1=default value)**
			Q02 Baud rate	**1**	300 BAUD	Baud rate 300
				2	600 BAUD	Baud rate 600
				3	1200 BAUD	Baud rate 1200
				4	2400 BAUD	Baud rate 2400
				5	4800 BAUD	Baud rate 4800
				6	**9600 BAUD**	**Baud rate 9600**
				7	19200 BAUD	Baud rate 19200
				8	38400 BAUD	Baud rate 38400
			Q03 Protocol	**1**	RESERVED	Reserve
				2	**MODBUS RTU**	**Modbus RTU**
			Q04 Parity	**0**	NONE	no parity test
				2	**EVEN**	**even**

1.menu	2.menu	module	question / parameter	settings		description
CONFIGURATION	INSTRUMENT	B30 COMMUNICATION	Q05 Timeout for missing telegrams on bus	0	TIMEOUT=OFF	without monitoring
				1	**1 SECOND**	**Timeout: 1s**
				2 to 24	2 to 24 SECONDS	Timeout: 2 to 24 s
				25	25 SECONDS	Timeout: 25 s
			P06 Profibus adress	**1 to 125**	**DP-Slave-Addr 1** to 125	**PROFIBUS device adress (1=factory setting)**
			Q07 Default DP configuration Input data	**0**	**CFG_I_NONE**	**No input data**
				1	CFG_I_1WORD	Length of input data: 1 word
				2	CFG_I_2WORDS	Length of input data: 2 words
				3	CFG_I_4WORDS	Length of input data: 4 words
				4	CFG_I_8WORDS	Length of input data: 8 words
				5	CFG_I_16WORDS	Length of input data: 16 words
			Q08 Default DP configuration Output data	**0**	**CFG_0_NONE**	**No output data**
				1	CFG_0_1WORD	Length of output data: 1 word
				2	CFG_0_2WORDS	Length of output data: 2 words
				3	CFG_0_4WORDS	Length of output data: 4 words
				4	CFG_0_8WORDS	Length of output data: 8 words
				5	CFG_A_16WORDS	Length of output data: 16 words
			Q09 Timeout for Modbus/ Profibus	1	**MODBUS**	**Timeout Modbus (Time s. Q05)**
				2	PROFIBUS	Timeout Profibus (Time s. Q05)
				3	MOD+ PROFIBUS	Timeout Modbus and Profibus
CONFIGURATION	AI-DEFINITION	Bxy (B01 to B14)		**AI-DEFINITION**	**AI-DEFINITION**	**AI-DEFINITION**
CONFIGURATION	AI-DEFINITION	Bxy AI-DEFINITION	**Q01** Signal range	**0**	**UNUSED**	Input unused **(factory setting for AI02, AI11 to AI14)**. AI01cannot be disabled.
				1	AIxy 0 . . 20mA	0 . . 20mA
				2	**AIxy 4 . . 20mA**	4 . . 20mA **(default for AI01)**
				3	AIxy TC	Thermocouple
				4	AIxy RTD-2W	Pt100 as 2-wire circuit
				5	AIxy RTD-3W	Pt100 as 3-wire circuit
				6	AIxy RTD-4W	Pt100 as 4-wire circuit (not for AI01)
				7	AIxy POT.150	Teletransmitter nominal 150 Ohm (75 to 200 Ohm)
				8	AIxy POT.1500	Teletransmitter, nom. 1500 Ohm (0,75 to 2 kOhm)
				9 (xy>10)	AIxy Period	Time measurement
				10 (xy>10)	AIxy FREQ 10 k	Frequency measurement up to 10 kHz
				11 (xy>10)	AIxy FREQ 20 k	Frequency measurement up to 20 kHz
				12 (xy>10)	Pulse	Pulse counter
				13 (xy>10)	Incremnt	Increm. transm. and direct. of rotat. (2 inputs)
				14 (xy>10)	Increm.0	Increm. transm. with zero transm. (3 inputs)
CONFIGURATION	AI-DEFINITION	Bxy AI-DEFINITION	**Q02** Linearisation	**1**	**AIxy-LINEAR**	**linear**
				2	AIxy-SQR1	Square rooting (switch-off below PVO)
				3	AIxy-SQR2	Square rooting (linear below PVO)
				4	AIxy-TYPE L	Typ L (-200 . . .1000°C)
				5	AIxy-TYPE J	Typ J (-200 . . .1200°C)
				6	AIxy-TYPE K	Typ K (-200 . . .1400°C)
				7	AIxy-TYPE U	Typ U (-200 . . .600°C)
				8	AIxy-TYPE R	Typ R (0 . . .1700°C)
				9	AIxy-TYPE S	Typ S (0 . . .1800°C)
				10	AIxy-TYPE T	Typ T (-200 . . .400°C)
				11	AIxy-TYPE B	Typ B (0 . . .1800°C)
				12	AIxy-TYPE D	Typ D (0 . . .2300°C)
				13	AIxy-TYPE E	Typ E (-200 . . .1000°C)
				14	AIxy-RTD-200	Pt 100 -200 . . .200°C
				15	AIxy-RTD-450	Pt 100 0 . . .450°C
				16	AIxy-RTD-800	Pt 100 -200 . . .800°C
				17	AIxy-TAB1	Table 1
				18	AIxy-TAB2	Table 2
				19	AIxy-TAB3	Table 3
				20	AIxy-TAB4	Table 4

CONFIGURATION | AI-DEFINITION | Bxy AI-DEFINITION | Q03 | 0 | Alxy-NO DIM | no dimension
| | | | | 1 | Alxy DIM USER | 4-digits, user-defined
| | | | | 2 | Alxy DIM % | %
| | | | | 3 | Alxy DIM °C | °C
| | | | | 4 | Alxy DIM °F | °F automatic range switch-over
| | | | Dimension for Alxy | 5 | Alxy DIM mbar | mbar
| | | | | 6 | Alxy DIM bar | bar
| | | | | 7 | Alxy DIM m3/h | m3/h
| | | | | 8 | Alxy DIM kg/h | kg/h
| | | | | 9 | Alxy DIM t/h | t/h
| | | | | 10 | Alxy DIM l/h | l/h
| | | | | 11 | Alxy DIM hl/h | hl/h
| | | | | 12 | Alxy DIM pH | pH
| | | | | 13 | Alxy DIM mm | mm
| | | | | 14 | Alxy DIM m | m
| | | | | 15 | Alxy DIM m/h | m/h
| | | | | 16 | Alxy DIM mV | mV
| | | | | 17 | Aly DIM V | V
| | | | | 18 | Alxy DIM mA | mA
| | | | | 19 | Alxy DIM A | A
| | | | | 20 | Alxy DIM s | s
| | | | | 21 | Alxy DIM Hz | Hz
| | | | | 22 | Alxy DIM kHz | kHz
| | | | **P04** Enter self def. dimension | Input | **Alxy-USER DIM** _ _ _ _ | **Edit dimension in the display (if Q03=1)**
| | | | **P05** Start of scaling | Input | **Alxy-SCAL.LO** | **Range: -9999 to 99999 ; Resolution: 1 Factory setting 0% of measuring range**
| | | | **P06** End of scaling | Input | **Alxy-SCAL.HI** | **Range: -9999 to 99999 ; Resolution: 1 Factory setting: 100% of measuring range**
| | | | **Q07** Reference junction compensation | 0 | Alxy NONE | no reference junction
| | | | | 1 | **Alxy TREF INT** | **internal**
| | | | | 2 | Alxy TREF 0C | external 0 °C
| | | | | 3 | Alxy TREF 20C | external 20 °C
| | | | | 4 | Alxy TREF 50C | external 50 °C
| | | | | 5 | Alxy TREF 60C | external 60 °C
| | | | **P08** Value PVO (square root) | Input | **Alxy-SQR** | **Range: -9999 to +99999, Resolution 0.01 Factory setting 0.0**
| | | | **P09** T-Filter time constant | Input | **Alxy-FILTERT.** | **Range: 0 to 120 s ; Resolution: 1 s Factory setting 0 s (0.00.00 h)**
| | | | **Q10** Default value strategy for sensor fault | 1 | **Alxy-FAIL.VAL** | **Default value**
| | | | | 2 | Alxy-OLD VAL. | Hold last measured value
| | | | **P11** Def. value | Input | **Alxy-FAIL VAL** | **Range: 0 to 102% ; Resolution 0.0001 Factory setting 102%**
CONFIGURATION | AI-DEFINITION | Bxy AE-DEFINITION | **Q12** Error message via BOmn | 0 | **Alxy-ERR=N.BO** | **No message**
| | | | | 1 | Alxy-ERR=BO01 | BO01
| | | | | **m n=2 to 5** | Alxy-ERR=BOmn | BOmn
| | | | | **m n=11 to 16** | Alxy-ERR=BOmn | BOmn
| | | | **Q13** Error message via Flag | 0 | **Alxy=N.FL** | **No errors to flag**
| | | | | 1 | AlxyERR=FLG01 | via Flag 1
| | | | | 2 | AlxyERR=FLG02 | via Flag 2
| | | | | 3 | AlxyERR=FLG03 | via Flag 3
| | | | | 4 | AlxyERR=FLG04 | via Flag 4
| | | | | 5 | AlxyERR=FLG05 | via Flag 5
| | | | | 6 | AlxyERR=FLG06 | via Flag 6

1.menu	2.menu	module	question / parameter	settings		description
CONFIGURATION	AI-DEFINITION	**Bxy** AE-DEFINITION	**Q15** Signal- and trigger adjustement (only for frequency module)	**1**	**AIxy NAMUR+**	**Pick-up acc.to NAMUR DIN 19232 positive edge**
				2	AIxy NAMUR -	Pick-up acc.to NAMUR DIN 19232 negative edge
				3	AIxy NAMUR +/-	Pick-up acc.to NAMUR DIN 19232 both edges
				4	AIxy 24 V POS	Binary signal 0/24 V positive edge
				5	AIxy 24 V NEG	Binary signal 0/24 V negative edge
				6	AIxy 24 V +/-	Binary signal 0/24 V both edges
				7	AIxy TTL POS	TTL signal 0/5V positive edge
				8	AIxy TTL NEG	TTL signal 0/5V negative edge
				9	AIxy TTL +/-	TTL signal 0/5V both edges
CONFIGURATION	AO-DEFINITION	**AO-DEFINITION**		**AO-DEFINITION**		**AO-DEFINITION** **AO-DEFINITION**
		Bxy (B01 to B13) **Bxy** AO-DEFINITION	**Q01** Signal range output AOxy	**0**	UNUSED	unused (not for AO01)
				1	AOxy 0 . . 20mA	0 . . 20mA
				2	**AOxy 4 . . 20mA**	**4 . . 20mA**
				4	AOxy 10 mA	10 mA constant current (only at current module)
				5	AOxy 20 mA	20 mA constant current (only at current module)
			Q02 Output of impedance monitoring via BO	**0**	**AAOxy LD=N.BO**	**No output**
				mn=1 to 5	AOxy LD.=BOmn	BOmn
				mn=11 to 16	AOxy LD.=BOmn	BOmn
			Q03 Error message via Flag	**0**	**AOxy LD=N.FL**	**No errors to flag**
				1	AOxy LD=FLG01	via Flag 1
				2	AOxy LD=FLG02	via Flag 2
				3	AOxy LD=FLG03	via Flag 3
				4	AOxy LD=FLG04	via Flag 4
				5	AOxy LD=FLG05	via Flag 5
				6	AOxy LD=FLG06	via Flag 6
CONFIGURATION	BIO-DEFINITION	**BIO-DEFINITION**			**BIO-DEFINITION**	**BIO-DEFINITION**
		Bxy (B01 to B16) BIO DEFINI-TION	**Q01** BIO Definition	**0**	BIOxy=UNUSED	Unused **(default for module, xy >10)**
				1	**BIxy DIRECT**	**24V - "logical 1"; 0V - "logical 0"**
				2	BIxy INVERS	24V - "logical 0"; 0V - "logical 1"
				3	BOxy ENGISED	"logical 0" - no current; "logical 1"
				4	BOxy DENGISED	"logical 0" - current; "logical 1" - no current
CONFIGURATION	LOOP1	**LOOP1**		**LOOP1**		**LOOP1**
		B01 **B01** CONTROL-FCT.	**Q01** Control function	**1**	**SINGLE LOOP**	Single-channel controller
				8	MANUALSTATION	Single-channel manual station
				9	SETPT.STATION	Single-channel setpoint station
				10	RATIO.STATION	Single-channel ratio station
				11	POSITIONER	Single-channel positioner
				13	ALARM STATION	Single-channel alarm station
			Q02 Controller output	**1**	**CONTINOUS**	**continuous**
				2	STEP CONTR.	motorised valve control (step control)
				3	ON/OFF CONTR.	On/Off (time proportioning)
				5	H-OFF-C (S+S)	heat-off-cool (2 binary outputs)
				6	H-OFF-C (C+S)	heat(continous)-off-cool(binary)
				7	SPLIT.R.(C+C)	split range with 2 continuous outputs

1.menu	2.menu	module	question / parameter	settings		description
CONFIGURATION	LOOP1	B01 CONTROL-FUNCTION	Q03 Manual characteristic (not valid for positioner and step controller)		The output values OUT1 or (OUT1 and OUT2) in relation to the output value OUT of the PID-algorithm (at analog bar) . The values OUT1 or OUT2 are for continous outputs directly understandable. If there are binary outputs the values will be represented by the keying ratio Ton/Tcycl of the output.	
				1	**M: CHAR.-DIR.**	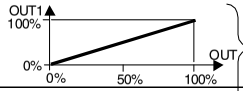 cont-inous + On/Off control-ler
				2	M: CHAR.-INV.	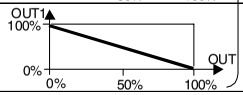
				3	**M: INV.-DIR.**	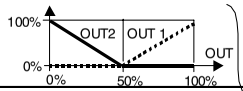 Split range + H-Off-C controller
				4	M: DIR.-DIR	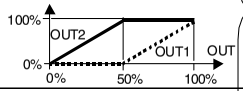
				5	M: INV.-INV.	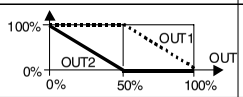
				6	M: DIR.-INV.	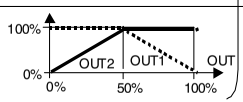
			Q04 position-feedback signal and display	0	**NO POS.FBACK**	**NO position-feedback signal**
				1	POS.FBCK=AI01	AI01
				2	POS.FBCK=AI02	AI02
				n=11 to 13	POS.FBCK=AIn	AIn
			Q05 Self-tuning	0	**SELFTUNE OFF**	**Off**
				1	Selftune On	On
CONFIGURATION	LOOP1	B02 CONTR.PARAM.	Q01 Automatic characteristic	1	A:CHAR.-DIR.	Automatic "direct" action characteristic
				2	**A:CHAR.-INV.**	**Automatic "inverse" action characteristic**
			Q02 Control-algorithm	1	P CONTROL	Proportional algorithm
				2	**PI CONTROL**	**Proportional-Integral algorithm**
				3	PD CONTROL	Proportional-Differential algorithm
				4	PID CONTROL	Proportional-Integral-Differential algorithm
			Q03 Differential share connected with	1	**DIFF. PV**	**controlled variable**
				2	DIFF. ERROR	Controller deviation
			Q05 Differentiation	1	**DIFF.BIPOLAR**	**bipolar**
				2	DIFF.POSITIV	only positive changes
				3	DIFF.NEGATIV	only negative changes
			Q06	0	**NO START UP**	**inactiv**
CONFIGURATION	LOOP1	B02 CONTR.PARAM	Q07 G (Gain) control	0	**G CONST.**	**off**
				1	G LIN. PV	linear from PV
				2	G LIN. SP	linear from SP
				3	G LIN. OUT	linear from Out
				4	G LIN. ERR	linear from Err
				5	G LIN. |ERR|	linear from |Err|
				7	G TABm PV	via table m of PV
				8	G TABm SP	via Table m of W
				9	G TABm OUT	via Table m of Y
				10	G TABm ERR	via Table m of Xw
				11	G TRANS.ALM4	G switching by AL4 (see LOOP1-B08-Q04 and PARAMETER-LOOP1-94)
				12	G TRANS=BIx	G switching by BIx (see Q08)
				13	G CONTR=AIx	G-linear from AIx (see Q09)

1.menu	2.menu	module	question / parameter	settings		description			
CONFIGURATION	LOOP1	**B02** CONTR.PARAM.	**Q08** G (Gain) changeover	**0**	**G TRANS=OFF**	**No G-Changeover**			
				1	G TRANS=BI01	Changeover with BI01			
				2	G TRANS=BI02	Changeover with BI02			
				xy=11 to 16	G TRANS=BIxy	Changeover with BIxy			
			Q09 G-control.AIx	**0**	**G AIx=OFF**	**No G control by AIx**			
				1	G CONTR=AI01	controlled by AI01			
				2	G CONTR=AI02	controlled by AI02			
				xy=11 to 14	G CONTR=AIxy	controlled by AIxy			
			Q10 to **Q12**	Tr (reset time) control (like G, see Q7 to Q9))					
			Q13 to **Q15**	Td (derivative time) control (like G, see Q7 to Q9)					
			Q16 to **Q18**	MR (manual reset) control (like G, see Q7 to Q9)					
			Q28 Disturbance Variable Out+Z	**0**	**FF:ADD=OFF**	**No disturbance variable feedforward to Out**			
				1	FF:ADD=AI01	AI01 adds to Out			
				2	FF:ADD=AI02	AI02 adds to Out			
				xy=11 to 14	FF:ADD=AIxy	AIxy adds to Out			
				91	FF:ADD=SC1	Output state correction 1 adds to Out			
			Q29 Disturbance variable adds to Out	**1**	**FF:LINEAR**	**linear**			
				2	FF:DIF.BIPOL	different. bipolar			
				3	FF:DIF.POSIT.	different. unipolar positive changes			
				4	FF:DIF.NEGAT.	different. unipolar negative changes			
CONFIGURATION	LOOP1	**B03** INPUT CIRCUIT	**Q01** Input circuit (parameters Const1, Const2, Const3, Const4 and BIAS see: PARAMETER/ LOOP1/101 to 104 and 117)	**0**	No INPUT CIRC	Without input signal connection (stations)			
				1	**ONE PV**	**Fixed value Err = IC1-SP**			
				2	3 COMPONENT	Multicomponents (see submenu Q02) Err = function (IC1, IC2, IC3)			
				3	MULTIPLICATE	Multiplication Err = IC1 x (IC2 + Const3 x IC3) - SP			
				4	RATIO1 (A/B)	ratio1 Err = IC1 - (R x (IC2 + Const3 x IC3) + Bias + IC4)			
				5	FIX/RATIO1	Fixed value/ratio1 switchable (1 <-> 4)			
				6	RATIO2 (A/(A+B))	ratio2 Err = IC1 - [(R / (1 - R)) x (IC2 + Const3 x IC3)+ Bias + IC4]			
				7	FIX/RATIO2	Fixed value/ratio2 switchable (1 <-> 6)			
				8	EXTR.PV. MAX	Extreme value PV: Err = Max (IC1,.....IC3) - SP			
				9	EXTR.PV MIN	Extreme value PV: Err = Min (IC1,.....IC3) - SP			
				10	EXTR.SP. MAX	Extreme value SP: Err = IC1 - Max (SP1,IC2,IC3)			
				11	EXTR.SP. MIN	Extreme value SP: Err = IC1 - Min (SP1,IC2,IC3)			
CONFIGURATION	LOOP1	**B03** INPUT CIRCUIT	**Q02** Multi component structure			Multi component structure (submenu of Q01-2) PVh=Const2*(IC2+Const3*IC3); PV=Const1*IC1			
						ERR =	D	PVan,PVdi	SPan
				1	**3 COMPONENT01**	**PV-SP**	**PVh**	**PV**	**SP**
				2	3 COMPONENT02	PV+PVh-SP	PV	PV+PVh	SP
				3	3 COMPONENT03	PV+PVh-SP	PVh	PV	SP
				4	3 COMPONENT04	PV+PVh-SP	PVh	PV+PVh	SP
				5	3 COMPONENT05	PV+PVh-SP	PV+PVh	PV+PVh	SP
				6	3 COMPONENT06	PV+PVh-SP	PVh	PV	SP
				7	3 COMPONENT07	PV+PVh-SP	PV+PVh	PV	SP
				8	3 COMPONENT08	PV-(SP+PVh)	PV	PV	SP
				9	3 COMPONENT09	PV-(SP+PVh)	PV	PV	SP+PVh
						D: D (Differential)-share connected to PVan, PVdi: Analog- + Digital display for PV SPan: Analog display for SP			

1.menu	2.menu	module	question / parameter	settings		description
CONFIGURATION	LOOP1	B03 INPUT CIRCUIT	**Q03** Display of the control deviation	**1**	**IND.ERR:%**	**in percent (100% = measuring range of IC1)**
				2	IND.ERR:EU	in EU
			Q04 Dimension for control variable and setpoint (not ratio and multiplication)	**0**	**P.S NO DIM**	**Without dimension**
				1	P.S USER.DIM	4-digit dimension, definable
				2	P.S DIM %	%
				3	P.S DIM °C	°C
				....	P.S DIM	see AI definition Q03
				22	P.S DIM kHz	kHz
			P05 Edit the user dimension	**Input**	**Ln-USER-DIM.** _ _ _ _	**Editing of the 4 digit User Dimension in Loop 1 (only if Q04=1)**
			Q06 Decimal places for PV,SP	**0**	P.S 10000.	0 decimal places
				1	P.S 1000.0	1 decimal places
				2	**P.S 100.00**	**2 decimal places**
				3	P.S 10.000	3 decimal places
				4	P.S 1.0000	4 decimal places
				5	P.S FLOAT.PT.	Display of floating decimal point
			P07 Start scaling for PV,SP	**Input**	**DIG.IND.LO.**	Start of the scale of PV and SP. **Factory setting: SP = 0.0** Range: -9999 to 99999
			P08 End scaling for PV,SP	**Input**	**DIG.IND.HI.**	End of the scale of PV and SP. **Factory setting: SP = 100.0** Range: -9999 to 99999
			Q09 Digital display of ratio	**1**	**RATIO IS/SP**	**Ract and Rset**
				2	ES1,RATIO*ES2	IC1 and R x IC2
			Q10 Dimension for ratio (also for ratio and multiplication)	**0**	**R NO DIM**	**without dimension (e.g. ratio)**
				1	R USER.DIM	4-digit dimension freely definable
				2	R DIM %	**% (Factory setting for ratio 2)**
			P11 Edit the user dimension for ratio	**Input**	**R-USER-DIM.** _ _ _ _	**Editing of the 4 digit User Dimension in Loop m (only if Q10=1)**
			Q12 Decimal places for Ratio-display	**0**	R 10000.	0 decimal places
				1	R 1000.0	1 decimal places
				2	**R 100.00**	**2 decimal places**
				3	R 10.000	3 decimal places
				4	R 1.0000	4 decimal places
				5	R FLOAT.PT.	Display of floating decimal point
			P13 Scaling-offset Ratio	**Input**	**Ratio Offset**	Offset ratio display; **Factory setting: SP = 0.0**; Range: -9999 bis 99999
			P14 Scaling-factor Ratio	**Input**	**Ratio Factor**	Digital scaling of ratio display for ratio R=1 **Factory setting: SP = 100.0** Range -9999 to 99999
			Q15 Analog display for ratio	**1**	**ANALOG PV,SP**	**PV1 and R x PV2**
				2	ANALOG RATIO	Ract and Rset
			P16 Value Display for 0%	**Input**	**ANALOG 0%**	Analog.0% s. B03-Q15 value of analog display for 0% Factory seeting 0.0 Range -9999 to 99999
			P17 Value display for 100%	**Input**	**ANALOG.100%**	Analog.100% s. B03-Q15 value of analog display for 100% Factory seeting 100.0 Range -9999 to 99999
			Q18 PV retrans-mission current control variable or Ract to	**0**	**PV,R=NO AO**	**Not routed to output**
				1	PV,R=AO01	Analog output AO01
				xy=11 to 13	PV,R=AOxy	Analog output AOxy
		B04 ROUTING_IC-AI	**Q01** Routing_IC1. IC1 of input circuit connected with:	**0**	IC1=0%	IC1 = fixed value 0%
				1	**IC1=AI01**	**IC1 connected to AI01**
				2	IC1=AI02	IC1 connected to AI02
				xy=11 to 14	IC1=AIxy	IC1 connected to AIxy
				91	IC1=SC_1	Output of the state correction 1
				94	IC1=TAB4	Output of Table 4
				100	IC1=100%	Fixed value 100%

1.menu	2.menu	module	question / parameter	settings		description
CONFIGURATION	LOOP1	B04 ROUTING_IC-AI	**Q02** Routing_IC2	**Routing IC2: Principle is the same as for IC1 (see Q01)**		
			Q03 Routing_IC3	**Routing IC3: Principle is the same as for IC1 (see Q01)**		
			Q04 Routing_IC4	**Routing IC4: Principle is the same as for IC1 (see Q01)**		
			Q05 TAB4.AI Table 4 connected with	**0**	**TAB4=NO AI**	**Not individually used**
				1	TAB4=AI01	AI01
				2	TAB4=AI02	AI02
				xy=11 to14	TAB4=AIxy	AIxy
			Q06 Routing_B1 Routing of binary signal with BIx	**0**	**B1=NO BI**	**B1 unused**
				1	B1=BI01	BI01
				2	B1=BI02	BI02
				xy=11 to 16	B1=BIxy	BIxy
CONFIGURATION	LOOP1	**B05** SETPOINTS	**Q01** Setpoint 1 of controller 1	**0**	SP1.INT=OFF	off
				1	**SP1.INT=ON**	**can only be changed per keys or interface**
				2	SP1.INT=TRACK	follows current setpoint
			Q02 SP1 as parameter (is then part of the configuration)	**0**	**SP1=NO PARAM**	**no**
				1	SP1=PARAM	yes is not tracked
CONFIGURATION	LOOP1	**B05** SETPOINTS	**Q03** setpoint 2 = ratio setpoint 1 SR1	**0**	**SP2.INT=OFF**	**off**
				1	SP2.INT=ON	Only changeable per key or interface
				2	SP2=PARAM.FLX	Only operatable at paralevel Delta only
				3	SP2=DELTA.PAR	operatable at paralevel
				4	SP2=RATIO.TRK	SR1 follows actual ratio
CONFIGURATION	LOOP1	**B05** SETPOINTS	**Q04** setpoint 3 = ratio setpoint 2 SR2	**0**	**SP3.INT=OFF**	**off**
				1	SP3.INT=ON	Only changeable per key or interface
				2	SP3=PARAM.FLX	Only to be operated at parameter menu
				3	SP3=DELTA.PAR	delta only to be operated at parameter menu
				4	SP3=RATIO.TRK	SR2 tracks the actual Ratio
CONFIGURATION	LOOP1	**B05** SETPOINTS	**Q05** setpoint 4 = ratio setpoint 3 SR3	**0**	**SP4.INT=OFF**	**off**
				1	SP4.INT=ON	Only changeable per key or interface
				2	SP4=PARAM.FLX	Only to be operated at parameter menu
				3	SP4=DELTA.PAR	delta only to be operated at parameter menu
				4	SP4=RATIO.TRK	SR3 tracks the actual Ratio
CONFIGURATION	LOOP1	**B05** SETPOINTS	**Q06** External setpoint	**0**	**SP.EXT=OFF**	**off**
				1	SP.EXT=AI01	AI01
				2	SP.EXT=AI02	AI02
				xy=11 to14	SP.EXT=AIxy	AIxy
CONFIGURATION	LOOP1	**B05** SETPOINTS	**Q07** Computer setpoint	**0**	**SP.COMP=OFF**	**off**
				1	SP.COMP=ON	on
CONFIGURATION	LOOP1	**B05** SETPOINTS	**Q08** Programmer setpoint	**0**	**SP.PRGRM=OFF**	**off**
				1	SP.PRGRM=ON	on
CONFIGURATION	LOOP1	**B05** SETPOINTS	**Q09** Display of setpoint falsified temporarilly by ramp	**1**	**SP.IND=TARGT**	**Display of the targeted setpoint**
				2	SP.IND=RAMP	Display of the falsified value.The targeted setpoint is displayed during SP adjustment,3 s after the last actuating key of the current setpoint.
CONFIGURATION	LOOP1	**B05** SETPOINTS	**Q10** Current setpoint to AOx	**0**	**SP.ACT=NO AO**	**Setpoint not on output**
				1	SP.ACT=AO01	Analog output AO01
				2	SP.ACT=AO02	Analog output AO02
				xy=11 to 13	SP.ACT=AOxy	Analog output AOxy
CONFIGURATION	LOOP1	**B05** SETPOINTS	**Q11** Setpoint changeover	**0**	**SP.TRANS=OFF**	**off**
				1	SP1-SP2 BIx	BIx / BIy / Setpoint: 0 / 0 / SP1; 1 / 0 / SP2; 0 / 1 / SP3; 1 / 1 / SP4
				2	SP1-SP4 BIy	Definition BIx, BIy see B09-Q13 , Q14

1.menu / 2.menu	module	question / parameter	settings		description	
CONFIGURATION LOOP1	**B07** CONTR.MODES	**Q01** operation mode	**1**	**MODE=MAN/AUTO**	**Manual/Automatic**	
			2	MODE=MAN	only manual	
			3	MODE=AUTO	only automatic	
			4	MODE=AUTO_MIN	only automatic,manual adjustment has effect on min.threshold for Out	
			5	MODE=AUTO_MAX	only automatic,manual adjustment has effect on max.threshold for Out	
			7	MAN/AUTO/DDC	manual/automatic/computer(DDC)	
			8	MAN/DDC	manual/computer(DDC)	
		Q02 SP-Tracking (SP is set to PV)	**0**	**TRACK SP OFF**	**SP1 tracking for Man OFF**	
			1	TRACK SP/ACT	SP1 tracking for Man On has effect on SP1 and RAMP	
			2	TRACK SP	SP1 tracking for Man On has effect only on RAMP	
		Q03 DDC function	**0**	**DDC=OFF**	**no DDC**	
			1	DDC=MAN,HOLD	In case of computer failure: Manual + last correction value	
			2	DDC=MAN,OUT=0	Man. + safety correct. value 0%	
			3	DDC=MAN,DV1	Manual + safety value DV1 (on Out1)	
			4	DDC=MAN,DV2	Manual + safety value DV2 (on Out2)	
			5	DDC=AUTO	begins automatically with last correction value	
		Q04 SP back-up setpoint in case of comp. failure (HOST)	**0**	**SP-ACTUAL**	**Adjusted setpoint**	
			1	SP-COMP	Computer setpoint	
			2	PV-ACTUAL	last control variable (PV-tracking)	
		Q05 Operation mode after mains resumption	**1**	**POWER=OLDMODE**	**Previous operation mode**	
			2	POWER=MAN,HLD	Manual last correction value	
			3	POWER=MAN,0%	Manual safety correct. value 0%	
			4	POWER=MAN,DV1	Manual safety value DV1	
			5	POWER=MAN,DV2	Manual safety value DV2	
		Q06 Operation mode during fault at input (fault on PV)	**1**	?AI=OLD MODE	No change	
			2	**?AI=MAN,HOLD**	**Manual last correction value**	
			3	?AI=MAN,0%	Manual safety correct. value 0%	
			4	?AI=MAN,DV1	Manual safety value DV1	
			5	?AI=MAN,DV2	Manual safety value DV2	
CONFIGURATION LOOP1	**B08** ALARMS	**Q01** Alarm value 1	**0**	ALRM1=OFF	Alarm value without function	
			1	**ALARM1 PV-MIN**	**Alarm value to PV-Min**	
			2	ALARM1 PV-MAX	Alarm value to PV-Max	
			3	ALM1 ERR-MIN	Alarm value to Err-Min	
			4	ALM1 ERR-MAX	Alarm value to Err-Max	
			6	ALM1 |ERR|-MX	Alarm value to I Err I-Max	Not for alarm station
			7	AL1 ER,SP%MIN	Alarm value to Err-Min in % of SP	
			8	AL1 ER,SP%MAX	Alarm value to Err-Max in % of SP	
			10	AL1 |ERR| S%,MAX	Alarm value to I Err I-Max in % of SP	
			11	AL1 DX/DT-MAX	Alarm value dx/dt Max	
			12	AL1 RATIO MIN	Alarm value R = Min. for input Ratio	
			13	AL1 RATIO MAX	Alarm value R = Max. for input Ratio	
			14	AL1 OUT-MIN	Alarm value to Out-Min	
			15	AL1 OUT-MAX	Alarm value to Out-Max	

1.menu	2.menu	module	question / parameter	settings		description	
CONFIGURATION	LOOP1	B08 ALARMS	Q02 Alarm value 2	n=0 to 15	Alarm value 2 like alarm value 1		
				2	ALARM2 PV.MAX	Default alarm value to PV-Max	
			Q03 Alarm value 3	n=0 to 15	Alarm value 3 like alarm value 1		
				3	ALARM3 ERR.MIN	Default alarm value to Err-Min	
			Q04 Alarm value 4	n=0 to 15	Alarm value 4 like alarm value 1		
				4	ALARM4 ERR.MAX	Default alarm value to Err-Max	
			Q05 Type alarm 1			adjustable in	displayed in
				1	ALM1 OP/OP	Operation level	Operation level
				2	ALM1 PAR/OP	Para-level	Operation level
				3	ALM1 PAR/PAR	Para-Level	Para-Level
			Q06 Type alarm 2			adjustable in	displayed in
				1	ALM2 OP/OP	Operation level	Operation level
				2	ALM2 PAR/OP	Para-level	Operation level
				3	ALM2 PAR/PAR	Para-Level	Para-Level
			Q07 Type alarm 3			adjustable in	displayed in
				1	ALM3 OP/OP	Operation level	Operation level
				2	ALM3 PAR/OP	Para-level	Operation level
				3	ALM3 PAR/PAR	Para-Level	Para-Level
			Q08 Type alarm 4			adjustable in	displayed in
				1	ALM4 OP/OP	Operation level	Operation level
				2	ALM4 PAR/OP	Para-level	Operation level
				3	ALM4 PAR/PAR	Para-Level	Para-Level
CONFIGURATION	LOOP1	B09 BIN.INPUTS	Q01 Changeover to Manual with last Out-value	0	MAN BI=OFF	no function	
				1	MAN=BI01	by BI01	
				2	MAN=BI02	by BI02	
				xy=11 to 16	MAN=BIxy	by BIxy	
			Q02 Dyn.<-->Stat. function depends on :	1	MAN STATIC	binary input (0 = PREVIOUS MODE,1 = MAN)	
				2	MAN DYNAMIC	changing 0 to 1 switches MAN-AUT-MAN	
			Q5 Changeover to manual mode with Out = 0%	0	MAN 0% BI=OFF	no function	
				1	MAN 0%=BI01	by BI01	
				2	MAN 0%=BI02	by BI02	
				xy=11 to 16	MAN 0%=BIxy	by BIxy	
			Q06 Dyn.<-->Stat. function depends on :	1	MAN 0% STATIC	binary input (0=AUT;1=MAN with OUT=0%)	
				2	MAN 0% DYNAM	change 0 to 1 switches: AUT-MAN(OUT=0%)-AUT	
			Q07 Changeover to manual mode with defined value 1 (DV1)	0	MAN DV1 BI=OFF	no function	
				1	MAN DV1=BI01	by BI01	
				2	MAN DV1=BI02	by BI02	
				xy=11 to 16	MAN DV1=BIxy	by BIxy	
			Q08 Dyn.<-->Stat. function depends on :	1	MAN DV1 STATIC	binary input (0=AUT;1=MAN with OUT=DV1)	
				2	MAN DV1 DYNAM	change 0 to 1 switches:AUT-MAN(OUT=DV1)-AUT	
			Q09 Changeover to manual mode with defined value 2 (DV2)	0	MAN DV2 BI=OFF	no function	
				1	MAN DV2=BI01	by BI01	
				2	MAN DV2=BI02	by BI02	
				xy=11 to 16	MAN DV2=BIxy	by BIxy	
			Q10 Dyn.<-->Stat. function depends on :	1	MAN DV2 STATIC	binary input (0=AUT;1=MAN with OUT=DV2)	
				2	MAN DV2 DYNAM	Change 0 to 1 switches:AUT-MAN(OUT=DV2)-AUT	

1.menu	2.menu	module	question / parameter	settings		description
CONFIGURATION	LOOP1	B09 BIN.INPUTS	**Q11** Switch on output tracking	0	**TRCKOUT BI=OF**	**(Out = AIxy)**
				1	TRCKOUT=BI01	by BI01
				2	TRCKOUT=BI02	by BI02
				xy=11 to 16	TRCKOUT=BIxy	by BIxy
			Q12 Ramp stop static	0	**SPRAMP BI=OFF**	**SP ramp stopped**
				1	SPRAMP=0=BI01	by BI01
				2	SPRAMP=0=BI02	by BI02
				xy=11 to 16	SPRAMP=0=BIxy	by BIxy
			Q13 SP changeover:Definition of BIx (B05-Q11)	0	**SP1-4 Bx=OFF**	**No setpoint changeover with BIx**
				1	SP1-4 Bx=BI01	by BI01
				2	SP1-4 Bx=BI02	by BI02
				xy=11 to 16	SP1-4 Bx=BIxy	by BIxy
			Q14 SP changeover:Definition of BIy (B05-Q11)	0	**SP1-4 By=OFF**	**No setpoint changeover with BIy**
				1	SP1-4 By=BI01	by BI01
				2	SP1-4 By=BI02	by BI02
				xy=11 to 16	SP1-4 By=BIxy	by BIxy
		B09 BIN.INPUTS	**Q15** SP(int)<->SPxt static changeover from internal (SP1 to 4) to external SP	0	**SPI-EXT BI OF**	**out of function**
				1	SPI-EXT=BI01	by BI01
				2	SPI-EXT=BI02	by BI02
				xy=11 to 16	SPI-EXT=BIxy	by BIxy
			Q16 DIR<->INV static changeover of characteristic	0	**CHAR BI=OFF**	**out of function**
				1	CHAR=BI01	by BI01
				2	CHAR=BI02	by BI02
				xy=11 to 16	CHAR=BIxy	by BIxy
			Q17 Static locking of the SP-adjustment capability	0	**LOCK SP BI=OF**	**out of function**
				1	LOCK SP=BI01	by BI01
				2	LOCK SP=BI02	by BI02
				xy=11 to 16	LOCK SP=BIxy	by BIxy
			Q18 Enabling of remote adjustment (static)	0	**REMOTE BI=OFF**	**Inhibition of remote adjustment**
				1	REMOTE SP	only setpoint (in all operation states)
				2	REMOTE OUT	only correction value (in manual)
				3	A=SP,M=OUT	setpoint is automatic, OUT is manual
			Q19 Remote adjustment (more) 100%/60s-adjustment	0	**MORE BI=OFF**	**out of function**
				1	MORE=BI01	by BI01
				2	MORE=BI02	by BI02
				xy=11 to 16	MORE=BIxy	by BIxy
			Q20 Remote adjustment (less) 100%/60s-adjustment	0	**LESS BI=OFF**	**out of function**
				1	LESS=BI01	by BI01
				2	LESS=BI02	by BI02
				xy=11 to 16	LESS=BIxy	by BIxy
			Q21 Computation ready	0	**COMP NOT BI**	**not used**
				1	COMPUTER=BI01	by BI01
				2	COMPUTER=BI02	by BI02
				xy=11 to 16	COMPUTER=BIxy	by BIxy
	LOOP1	B10 ROUTE OUT	**Q01** Routing OUT1 to a contin. controller output AOxy	0	OUT1 NO AO	for switching controllers
				1	**OUT1 CON=AO01**	**AO01**
				xy=11 to 13	OUT1 CON=AOxy	AOxy
			Q02 Routing OUT2 to a contin. controller output AOxy	0	OUT2=NO AO	unused
				1	**OUT2 CON AO01**	**AO01**
				xy=11 to 13	OUT2 CON AOxy	AOxy
			Q03 Routing Out to AOx Diagram of position display Out for switching controllers and split range	0	**OUTA=NO AO**	**No output**
				1	OUTA=AO01	AO01
				xy=11 to 13	OUTA=AOxy	AOxy

1.menu	2.menu	module	question / parameter	settings		description
CONFIGURATION	LOOP1	B10 ROUTE OUT	**Q04** Routing Out1 to BOx First switch contact (for step controller "more")	**0**	**OUT1=NO BO**	**for continuous controller**
				1	OUT1=BO01	BO01
				xy=2 to 5	OUT1=BOxy	BOxy
				xy=11 to 16	OUT1=BOxy	BOxy
			Q05 Routing of Out2 o BOx second switch contact(for step controller'less')	**0**	**OUT2=NO BO**	**for continuous controller**
				1	OUT2=BO01	BO01
				xy=2 to 5	OUT2=BOxy	BOxy
				xy=11 to 16	OUT2=BOxy	BOxy
			Q06 Output limits	**0**	OUT.L MIT=OFF	always inactive (for step controller)
				1	**OUT.L MIT=AUT**	**active only in automatic operation**
				2	OUT.L MIT=ON	active in manual and automatic operation
CONFIGURATION	LOOP1	B10 ROUTE OUT	**Q08** Out-max int./extern. defined	**0**	**OUT-MAX=PAR**	**internal parameter**
				1	OUT-MAX=AI01	routed through AI01
				2	OUT-MAX=AI02	routed through AI02
				xy=11 to 13	OUT-MAX=AIxy	routed through AIxy
CONFIGURATION	LOOP1	B10 ROUTE OUT	**Q09** Out-min int./extern. defined	**0**	**OUT-MIN=PAR**	**internal parameter**
				1	OUT-MIN=AI01	routed through AI01
				2	OUT-MIN=AI02	routed through AI02
				xy=11 to 13	OUT-MIN=AIxy	routed through AIxy
CONFIGURATION	LOOP1	B10 ROUTE OUT	**Q10** Out track (see B09-Q11)	**0**	**OUT-TRCK=OFF**	**No Out tracking**
				1	OUT-TRCK=AI01	Out= AI01 if BIx
				2	OUT-TRCK=AI02	Out= AIxy if BIx
				xy=11 to 13	OUT-TRCK=AIxy	Out= AIxy if BIx
CONFIGURATION	LOOP1	B11	**Q01** Alarm value 1 to output	**0**	**ALARM1=NO BO**	**No output**
				1	ALARM1=BO01	BO01
				xy=2 to 5	ALARM1=BOxy	BOxy
				xy=11 to 16	ALARM1=BOxy	BOxy
CONFIGURATION	LOOP1	B11 BIN. OUTPUTS	**Q02** Alarm value 2 to output	**0**	**ALARM2=NO BO**	**No output**
				1	ALARM2=BO01	BO01
				xy=2 to 5	ALARM2=BOxy	BOxy
				xy=11 to 16	ALARM2=BOxy	BOxy
CONFIGURATION	LOOP1	B11 BIN. OUTPUTS	**Q03** Alarm value 3 to output	**0**	**ALARM3=NO BO**	**No output**
				1	ALARM3=BO01	BO01
				xy=2 to 5	ALARM3=BOxy	BOxy
				xy=11 to 16	ALARM3=BOxy	BOxy
CONFIGURATION	LOOP1	B11 BIN. OUTPUTS	**Q04** Alarm value 4 to output	**0**	**ALARM4=NO BO**	**No output**
				1	ALARM4=BO01	BO01
				xy=2 to 5	ALARM4=BOxy	BOxy
				xy=11 to 16	ALARM4=BOxy	BOxy
CONFIGURATION	LOOP1	B11 BIN. OUTPUTS	**Q05** Feedback signal manual to output	**0**	**MAN=NO BO**	**No output**
				1	MAN=BO01	BO01
				xy=2 to 5	MAN=BOxy	BOxy
				xy=11 to 16	MAN=BOxy	BOxy
CONFIGURATION	LOOP1	B11 BIN. OUTPUTS	**Q06** Feedback signal automatic to output	**0**	**AUTO=NO BO**	**No output**
				1	AUTO=BO01	BO01
				xy=2 to 5	AUTO=BOxy	BOxy
				xy=11 to 16	AUTO=BOxy	BOxy
CONFIGURATION	LOOP1	B11 BIN. OUTPUTS	**Q08** Feedback signal-extemal setpoint	**0**	**WEXT=NO BO**	**No output**
				1	WEXT=BO01	BO01
				xy=2 to 5	WEXT=BOxy	BOxy
				xy=11 to 16	WEXT=BOxy	BOxy

1.menu	2.menu	module	question / parameter	settings		description
CONFIGURATION	PROGRAMMER	**B11** BIN. OUTPUTS	**Q09** Program end signal to output	**0**	**PRG.HI=NO BO**	**No output**
				1	PRG.HI=BO01	BO01
				xy=2 to 5	PRG.HI=BOxy	BOxy
				xy=11 to 16	PRG.HI=BOxy	BO76
			Q10 Binary track 1 of the programer to binary output	**0**	**PRG.BIN1=N.BO**	**No output**
				1	PRG.BIN1=BO01	BO01
				xy=2 to 5	PRG.BIN1=BOxy	BOxy
				xy=11 to 16	PRG.BIN1=BOxy	BOxy
			Q11 Binary track 2 of the programmer to binary output	**0**	**PRG.BIN2=N.BO**	**No output**
				1	PRG.BIN2=BO01	BO01
				xy=2 to 5	PRG.BIN2=BOxy	BOxy
				xy=11 to 16	PRG.BIN2=BOxy	BOxy
			Q12 Binary track 3 of the programer to binary output	**0**	**PRG.BIN3=N.BO**	**No output**
				1	PRG.BIN3=BO01	BO01
				xy=2 to 5	PRG.BIN3=BOxy	BOxy
				xy=11 to 16	PRG.BIN3=BOxy	v
			Q13 Binary track 4 of the programer to binary output	**0**	**PRG.BIN4=N.BO**	**No output**
				1	PRG.BIN4=BO01	BO01
				xy=2 to 5	PRG.BIN4=BOxy	BOxy
				xy=11 to 16	PRG.BIN4=BOxy	BOxy
		B12 **B12** BIN.FLAGS	**Q01** Alarm value 1	**0**	**ALARM1=NO FLG**	**Alarm value1 not connected to any Flag**
				1	ALARM1=FLG01	Display with Flag 1
				n=2 to 5	ALARM1=FLG0n	Display with Flag n
				6	ALARM1=FLG06	Display with Flag 6
			Q02 Alarm value 2	**0**	**ALARM2=FLG**	**Alarm value2 not connected to any Flag**
				1	ALARM2=FLG01	Display with Flag 1
				n=2 to 5	ALARM2=FLG0n	Display with Flag n
				6	ALARM2=FLG06	Display with Flag 6
			Q03 Alarm value 3	**0**	**ALARM3=NO FLG**	**Alarm value3 not connected to any Flag**
				1	ALARM3=FLG01	Display with Flag 1
				n=2 to 5	ALARM3=FLG0n	Display with Flag n
				6	ALARM3=FLG06	Display with Flag 6
			Q04 Alarm value 4	**0**	**ALARM4=NO FLG**	**Alarm value4 not connected to any Flag**
				1	ALARM4=FLG01	Display with Flag 1
				n=2 to 5	ALARM4=FLG0n	Display with Flag n
				6	ALARM4=FLG06	Display with Flag 6
		PROGRAMMER			**PROGRAMMER**	**PROGRAMMER**
		B01 **B01** PROGRAMS (activ. LOOP1/B05/Q08)	**Q01** Program 1	**0**	**PROGR1=OFF**	**Not activated,without function**
				1	PG1-START SP0	Start at programmed value
				2	PG1-START PV	Start at instantaneous value
			Q0n Program n	**n=2 to 9**	**Program 2 to 9**	
			Q10 Program 10	**0**	**PG10=OFF**	**Not activated, without function**
				1	PG10-START SP0	Start at programmed value
				2	PG10-START PV	Start at instantaneous value
		B02 POWER FAIL	**Q01**	**0**	**PRG-RESET**	**Program reset after mains resumption**
				1	PRG-CONTINUE	Old mode after mains resumption

1.menu	2.menu	module	question / parameter	settings		description							
			STATE CORR 1		STATE CORR 1	STATE CORR 1							
CONFIGURATION	STATE CORR 1	B01	Q01	0	UNUSED	**unused** (see Confi-Loop1-B04-Q0x-91)							
		B01 TASK	State correction 1	1	SC1 GAS ORIF	Gas flow (m3/h)-differential pressure method							
				2	SC1 GAS VOLUM	Gas flow (m3/h)-volume measurement							
				3	SC1 STEAM,ORI	Steam mass flow-differential pressure							
				4	SC1 S.STEAM,P	Saturated steam pressure correction							
				5	SC1 S.STEAM,T	Saturated steam temperature correction							
				6	SC1 WATER ORI	Water mass flow-differential pressure							
				7	SC1 WATER VOL	Water mass flow-volume measurement							
				8	SC1 BOIL.LEV.	Tank water level							
				Input		GAS ORIF	GAS VOL	S.STEAM,P	S.STEAM,T	SATTD-T	WATER	ORI	WAT. VOL
			P02		Qn-CALCUL	Qn,r	-	Qm,r	Qm,r	Qm,r	Qm,r	-	-
			P03	Input	dP-CALCUL	dP,r	-	dP,r	dP,r	dP,r	dP,r	-	-
			P04	Input	P-atm-CALCUL	P_{atm},r	P_{atm},r	P_{atm},r	P_{atm},r	-	P_{atm},r	P_{atm},r	-
			P05	Input	P-CALCUL	POK,r	-	POK,r	POK,r	-	POK,r	POK,r	-
			P06	Input	T-CALCUL	T,r	-	T,r	-	T,r	T,r	-	-
			P07	Input	Z-CALCUL	Z,r	-	-	-	-	-	-	-
			P08	Input	RHO-CALCUL	RHOnr	RHOnr	-	-	-	-	-	-
			P09	Input	Q-HI	reserved							
			P10	Input	P-MIN	Pmin	Pmin	Pmin	Pmin	-	Pmin	Pmin	Pmin
			P11	Input	P-MAX	Pmax	Pmax	Pmax	Pmax	-	Pmax	Pmax	Pmax
			P12	Input	T-MIN	Tmin	Tmin	Tmin	-	Tmin	Tmin	Tmin	Tmin
			P13	Input	T-MAX	Tmax	Tmax	Tmax	-	Tmax	Tmax	Tmax	Tmax
			P14	Input	RHO-MIN	RHOmin	RHOmin	-	-	-	-	-	-
			P15	Input	RHO-MAX	RHOmax	RHOmax	-	-	-	-	-	-
			P16	Input	DISTANCE	-	-	-	-	-	-	-	HAB
			P17	Input	T-REFERENC	-	-	-	-	-	-	-	Tvgl
			Q18	1	OVERPRESSURE	x	x	x	x	-	x	x	x
				2	ABS.PRESSURE	x	x	x	x	-	x	x	x
			P20	Input	COMP.COEF Z1	Z(1)	Z(1)	-	-	-	-	-	-
			. . .	Input	COMP.COEF Zn (n=2 to 8)	Z(n)	Z(n)	-	-	-	-	-	-
			P28	Input	COMP.COEF Z9	Z(9)	Z(9)	-	-	-	-	-	-
			Q29 signal square rooted or not	0	SC1 P-TM-lin	x	x	x	-	x	x	x	x
				1	SC1 P-TM-SQR	x	x	x	-	x	x	x	x
			P30	Input	RANGE LO	Start value of the value area of the correct. signal. **factory preset: 0.0** ; range: -9999 bis 99999							
			P31	Input	RANGE HI	End value of the value area of the corrected signal. **factory preset: 100.0** ; range: -9999 bis 99999							

1.menu / 2.menu	module	question / parameter	settings		description
CONFIGURATION / STATE CORR 1		**Q32** Dimension for SC1	**1**	**SC1 NO DIM**	**No dimension**
			2	**SC1 USER DIM**	4-digit, self definable P33
			7	**SC1 DIM m3/h**	m3/h
			8	**SC1 DIM kg/h**	kg/h
			9	**SC1 DIM t/h**	t/h
			13	**SC1 DIM mm**	mm
			14	**SC1 DIM m**	m
		P33	**Input**	**DIMENSION**	**Editing of the user dimension if Q32 = 2**
CONFIGURATION / STATE CORR 1	**B02** **B02** ROUTING_AI	**Q01** Measured flow ,differential pressure when B01-Q01=8	**1**	**ISC_Q=AI01**	**AI01**
			2	ISC_Q=AI02	AI02
			xy=11 to 14	ISC_Q=AIxy	AIxy
		Q02 Pressure measured value (P) in bar	**0**	**ISC_P_CALC**	**Not used (P = Pr)**
			1	ISC_P=AI01	AI01
			2	ISC_P=AI02	AI02
			xy=11 to 14	ISC_P=AIxy	AIxy
		Q03 Temperature measured value (T) in °C	**0**	**ISC_T_CALC**	**not used (T = Tr)**
			1	ISC_T=AI01	AI01
			2	ISC_T=AI02	AI02
			xy=11 to 14	ISC_T=AIxy	AIxy
		F04 Density measured value in kg/m3	**0**	**ISC_DENS_CALC**	**not used (Rho = Rhonr)**
			1	ISC_DENS=AI01	AI01
			2	ISC_DENS=AI02	AI02
			xy=11 to 14	ISC_DENS=AIxy	AIxy
CONFIGURATION / STATE CORR 1	**B03** B03 ROUTING AO	**Q01** State correction to analog output	**0**	**SC1=NO AO**	**no output**
			1	SC1=AO01	AO01
			xy=11 to 13	SC1=AOxy	AOxy

19 Tables for the parameter setting menu

1.menu	2.menu	parameter number	text	description	range min.	range max.	unit	maxi-mum reso-lution	factory setting	user setting
PARAMETER		PARAMETER		PARAMETER	PARAMETER		PARAMETER		PARAMETER	
PARAMETER	INSTRUMENT	INSTRUMENT		INSTRUMENT	INSTRUMENT		INSTRUMENT		INSTRUMENT	
PARAMETER	INSTRUMENT	Table 1	10	**TAB1.0**	Checkpt. 0 at 0%	-9999	99999	EU	0,0001	0,0	
			11	**TAB1.1**	Checkpt. val. 1 at 10%					0,1	
			12	**TAB1.2**	Checkpt. val. 2 at 20%					0,2	
			13	**TAB1.3**	Checkpt. val. 3 at 30%					0,3	
			14	**TAB1.4**	Checkpt. val. 4 at 40%					0,4	
			15	**TAB1.5**	Checkpt. val. 5 at 50%					0,5	
			16	**TAB1.6**	Checkpt. val. 6 at 60%					0,6	
			17	**TAB1.7**	Checkpt. val. 7 at 70%					0,7	
			18	**TAB1.8**	Checkpt. val. 8 at 80%					0,8	
			19	**TAB1.9**	Checkpt. val. 9 at 90%					0,9	
			20	**TAB1.10**	Checkpt. val. 10 at 100%					1,0	
PARAMETER	INSTRUMENT	Table 2	30	**TAB2.0**	Checkpt. val. 0 at 0%	-9999	99999	EU	0,0001	0,0	
			31	**TAB2.1**	Checkpt. val. 1 at 10%					0,1	
			32	**TAB2.2**	Checkpt. val. 2 at 20%					0,2	
			33	**TAB2.3**	Checkpt. val. 3 at 30%					0,3	
			34	**TAB2.4**	Checkpt. val. 4 at 40%					0,4	
			35	**TAB2.5**	Checkpt. val. 5 at 50%					0,5	
			36	**TAB2.6**	Checkpt. val. 6 at 60%					0,6	
			37	**TAB2.7**	Checkpt. val. 7 at 70%					0,7	
			38	**TAB2.8**	Checkpt. val. 8 at 80%					0,8	
			39	**TAB2.9**	Checkpt. val. 9 at 90%					0,9	
			40	**TAB2.10**	Checkpt. val. 10 at 100%					1,0	
PARAMETER	INSTRUMENT	Table 3	50	**TAB3.0**	as tables 1 and 2						
			.....	.....							
			60	**TAB3.10**							
PARAMETER	INSTRUMENT	Table 4	70	**TAB4.0**	as tables 1 and 2						
				.....							
			80	**TAB4.10**							

1.menu	2.menu	parameter number	text	description	range min.	range max.	unit	maxi-mum reso-lution	factory setting	user setting
PARAMETER	LOOP 1		LOOP 1	LOOP 1	LOOP1				LOOP1	
	PID-Parameter	1	GAIN G	Controller gain G (active)	0,001	1000	ohne	0,0001	1	
		2	RESET TIME Tr	Reset time Tr (active)	0 min	600 min	min	0,0001 min	0,5 min	
		3	DERI. TIME Td	Derivative time Td (active)	0 min	600 min	min	0,0001 min	0,1 min	
		4	RATE GAIN	Rate gain Gd	1	10	ohne	0,0001	5	
		5	MANUAL RESET1	Manual reset MR (active)	-100	+100	%	0,1	50	
	Gain control LOOP 1	6	GAIN LO	G ▲ U controls G GAIN LO GAIN HI U-GAIN-LO U-GAIN-HI U Low G for parameter control	0,001	1000	ohne	0,0001	1	
		7	GAIN HI	High G for parameter control	0,001	1000	ohne	0,0001	1	
		8	U-GAIN-LO	Value of U1 for GAIN LO	Controling value U1 is defined by:				0	
		9	U-GAIN-HI	Value of U1 for GAIN HI	CONF-LOOP1-B02-Q07/Q09				0	
	Tr (reset time) control LOOP 1	10	Tr-LO	Low Tr for parameter control	0 min	600 min	min	0,0001 min	0,5 min	
		11	Tr-HI	High Tr for parameter control	0 min	600 min	min	0,0001 min	0,5 min	
		12	U-Tr LO	Value of U2 for Tr-LO	Controling value U2 is defined by:				0	
		13	U-Tr HI	Value of U2 for Tr-HI	CONF-LOOP1-B02-Q10/Q12				0	
	Td (deriv. Time) control LOOP 1	14	Td LO	Low Td for parameter control	0 min	600 min	min	0,0001 min	0,1 min	
		15	Td HI	High Td for parameter control	0 min	600 min	min	0,0001 min	0,1 min	
		16	U-Td LO	Value of U3 for Td LO	Controling value U3 is defined by:				0	
		17	U-Td HI	Value of U3 for Td HI	CONF-LOOP1-B02-Q13/Q15				0	
	MR (manual reset) contr. LOOP1	18	MR-LO	MR-LO for parameter control	-100	+100	%	0,1	50	
		19	MR-HI	MR-HI for parameter control	-100	+100	%	0,1	50	
		20	U-MR LO	Start value of U4 for MR-LO	Controling value U4 is defined by:				0	
		21	U-MR HI	End value of U4 for MR-HI	CONF-LOOP1-B02-Q16/Q18				0	
	Second PID param.set for spl.range+ H-Off-C LOOP1	25	GAIN 2	Controller gain G2 (active)	0,001	1000	ohne	0,0001	1	
		26	RESET TIME 2	Reset time Tr2 (active)	0 min	600 min	min	0,0001 min	0,5 min	
		27	RATE TIME 2	Derivative time Td2 (active)	0 min	600 min	min	0,0001 min	0,1 min	
		28	RATEGAIN2	Rate gain Gd2	1	10	ohne	0,0001	5	
		29	MANUAL RESET2	Manual reset MR2 (active)	-100	+100	%	0,1	50	
	G2 control LOOP1	30	GAIN2 LO	Low G2 for parameter control	0,001	1000	ohne	0,0001	1	
		31	GAIN2 HI	High G2 for parameter control	0,001	1000	ohne	0,0001	1	
	Tr2 control LOOP1	32	Tr2 LO	Low Tr2 for parameter control	0 min	600 min	min	0,0001 min	0,5 min	
		33	Tr2 HI	High Tr2 for parameter control	0 min	600 min	min	0,0001 min	0,5 min	
	Td2 control LOOP1	34	Td2 LO	Low Td2 for parameter control	0 min	600 min	min	0,0001 min	0,1 min	
		35	Td2 HI	High Td2 for parameter control	0 min	600 min	min	0,0001 min	0,1 min	
	MR2 control LOOP1	36	MR2 LO	Low MR2 for parameter control	-100	+100	%	0,1	50	
		37	MR2 HI	High MR2 for parameter control	-100	+100	%	0,1	50	

1.menu	2.menu	parameter number	text	description	range min.	range max.	unit	maxi-mum reso-lution	factory setting	user setting
PARAMETER	LOOP1	Controller output 55	DEAD ZONE	Dead zone	0	25%	%	0,1	0% (For On/off + contin. contr.), else 1%	
PARAMETER	LOOP1	Controller output 56	MIN.PULSETIME	Minimum ON period Step controller	0	5 s	s	0,05	0,05	
PARAMETER	LOOP1	Controller output 57	N PER MIN_1	Transfers per minute Z1	0,05	60	1/min	0,05	6	
PARAMETER	LOOP1	Controller output 58	N PER MIN 2	Transfers per minute Z2	0,05	60	1/min	0,05	6	
PARAMETER	LOOP1	Controller output 59	RESERVED	Not in use			h.mm.ss		0.00.00 h	
PARAMETER	LOOP1	Controller output 60	RESERVED	Not in use			h.mm.ss		0.00.00 h	
PARAMETER	LOOP1	Controller output 61	RESERVED	Not in use			h.mm.ss		0.00.00 h	
PARAMETER	LOOP1	Controller output 62	RESERVED	Not in use			h.mm.ss		0.00.00 h	
PARAMETER	LOOP1	Controller output 67	OUT_MIN	Control variable min.	-5	100	%	0,1	0	
PARAMETER	LOOP1	Controller output 68	OUT_MAX	Control variable max.	0	105	%	0,1	100	
PARAMETER	LOOP1	Controller output 69	OUT.RAMP +	Output variable ramp rising	0,1	9999	%/s	0,001	9999	
PARAMETER	LOOP1	Controller output 70	OUT.RAMP -	Output variable ramp falling	0,1	9999	%/s	0,001	9999	
PARAMETER	LOOP1	Controller output 71	DV1	Defined value 1 for Output1	-5	105	%	0,1	0	
PARAMETER	LOOP1	Controller output 72	DV2	Defined value 2 for Output2	-5	105	%	0,1	0	
PARAMETER	LOOP 1	Setpoints and alarms 75	SP_ MIN	Setpoint min.	-9999	99999	EU	0,0001	-9999	
PARAMETER	LOOP 1	Setpoints and alarms 76	SP_MAX	Setpoint max.	-9999	99999	EU	0,0001	99999	
PARAMETER	LOOP 1	Setpoints and alarms 77	SP.RAMP +	Setpoint ramp rising	0,0001	99999	EU/s	0,0001	99999	
PARAMETER	LOOP 1	Setpoints and alarms 78	TOL.SP.RAMP+	Permissible difference between Setpoint and actual value	0	99999	EU	0,0001	99999	
PARAMETER	LOOP 1	Setpoints and alarms 79	SP.RAMP-	Setpoint ramp falling	0,0001	99999	EU/s	0,0001	99999	
PARAMETER	LOOP 1	Setpoints and alarms 80	TOL.SP.RAMP -	Permissible difference between Setpoint and actual value	0	99999	EU	0,0001	99999	
PARAMETER	LOOP 1	Setpoints and alarms 81	SP1	Setpoint 1	-9999	99999	EU	0,0001	0	
PARAMETER	LOOP 1	Setpoints and alarms 82	SP2	Setpoint 2 or delta for setpoint 1	-9999	99999	EU	0,0001	0	
PARAMETER	LOOP 1	Setpoints and alarms 83	SP3	Setpoint 3 or delta for setpoint 1	-9999	99999	EU	0,0001	0	
PARAMETER	LOOP 1	Setpoints and alarms 84	SP4	Setpoint 4 or delta for setpoint 1	-9999	99999	EU	0,0001	0	
PARAMETER	LOOP 1	Alarm values 91	ALARM1	Alarm value 1	-9999	99999	EU	0,0001	-9999	
PARAMETER	LOOP 1	Alarm values 92	ALARM2	Alarm value 2	-9999	99999	EU	0,0001	99999	
PARAMETER	LOOP 1	Alarm values 93	ALARM3	Alarm value 3	-9999	99999	EU	0,0001	99999	
PARAMETER	LOOP 1	Alarm values 94	ALARM4	Alarm value 4	-9999	99999	EU	0,0001	99999	
PARAMETER	LOOP 1	Alarm values 95	HYSTERESIS	Hysteresis	0	99999	EU	0,0001	1	
PARAMETER	LOOP 1	Alarm values 96	TIME-UNIT	Time unit for dx/dt alarm value	1	3	ohne	1 =s 2 = min 3 = h	1	
PARAMETER	LOOP 1	Weighting factors of IC 101	CONST1	Weighting factor in input signal connection	-9999	99999	ohne	0,0001	1	
PARAMETER	LOOP 1	Weighting factors of IC 102	CONST2	Weighting factor in input signal connection						
PARAMETER	LOOP 1	Weighting factors of IC 103	CONST3	Weighting factor in input signal connection						
PARAMETER	LOOP 1	Weighting factors of IC 104	CONST4	Weighting factor in input signal connection						
PARAMETER	LOOP 1	Ratio 1 115	RATIO MIN	Ratio min.	0	99999	EU	0,0001	0	
PARAMETER	LOOP 1	Ratio 1 116	RATIO MAX	Ratio max.	0	99999	EU	0,0001	2	
PARAMETER	LOOP 1	Ratio 1 117	BIAS	Bias ratio control	-9999	99999	ohne	0,0001	0	
PARAMETER	LOOP 1	Disturbance value feedforw. 120	FF:TIME-CONST	Time constant d/dt	0.00.01	1.00.00	h.mm.ss	1s	0.00.15	
PARAMETER	LOOP 1	Disturbance value feedforw. 121	FF:DIFF-GAIN	Differential gain	-10	10	ohne	0,1	1	
PARAMETER	LOOP 1	Selftune 125	dY-AMOUNT	1.positioning step	-100,0	+100,0	%	0,1	5,0	
PARAMETER	LOOP 1	Selftune 126	MAX.OUT.DUR	Max.step duration	0.00.09	20.00 h	h.mm.ss	1 s	15 s	
PARAMETER	LOOP 1	Selftune 127	MAX-Pos.ERR	Max. permissible posit.control deviation	0,0001	99999	EU	0,0001	99999	
PARAMETER	LOOP 1	Selftune 128	MAX-Neg.ERR	Max. permissible negat. control deviation	0,0001	99999	EU	0,0001	99999	
PARAMETER	LOOP 1	TAG-NAME 199	Keys ⇑ und ⇓ act on text line	TAG name: A . . . Z, a . . . . Z,+,-,./,%,_),(,°, 9 . . . 0, spacing,-,12 character	Default-string "_ _ _ _ _ _ _ _ _ _ _ _"					

1.menu	2.menu	parameter number	text	description	range min.	range max.	unit	maxi-mum reso-lution	factory setting	user setting
PARAMETER	PROGRAM n (n=1 to 10)			PROGRAM n (n=1 to 10)					PROGRAM n (n=1 to 10)	
PARAMETER	16 Stützstellen	1	VALUE n.0	Start setpoint 0 (start time segment 1). For CONFI/PROGRAMMER/B01/Qn=0 the Program starts with this setpoint and moves as ramp to VALUE n.1. For CONFI /PROGRAMMER/B01/Qn=1 the program starts with the setpoint beeing the actual process value PV0 and moves as ramp to VALUE n.1. The value of the gradient is then: Grad =(VALUEn.1-VALUEn.0) /TIMEn.0[the below table is valid. VALUEn.1 ‡VALUEn.0 neg.Gr. for PVO>VALUEn.1 / pos.Gr. for PVO<VALUEn.1 VALUEn.1 =VALUEn.0 moves in TIMEn.1 from PVO to VALUEn.1						
PARAMETER	PROGRAM n (n=1 to 10)	2	VALUE n.1	Setpoint 1 (end of time segment 1)	-9999	99999	EU	0.0001	-99999	
PARAMETER	PROGRAM n (n=1 to 10)	3	VALUE n.2	Setpoint 2 (end of time segment 2)						
PARAMETER	PROGRAM n (n=1 to 10)	4	VALUE n.3	Setpoint 3 (end of time segment 3)						
PARAMETER	PROGRAM n (n=1 to 10)	5	VALUE n.4	Setpoint 4 (end of time segment 4)						
PARAMETER	PROGRAM n (n=1 to 10)	6	VALUE n.5	Setpoint 5 (end of time segment 5)						
PARAMETER	PROGRAM n (n=1 to 10)	7	VALUE n.6	Setpoint 6 (end of time segment 6)						
PARAMETER	PROGRAM n (n=1 to 10)	8	VALUE n.7	Setpoint 7 (end of time segment 7)						
PARAMETER	PROGRAM n (n=1 to 10)	9	VALUE n.8	Setpoint 8 (end of time segment 8)						
PARAMETER	PROGRAM n (n=1 to 10)	10	VALUE n.9	Setpoint 9 (end of time segment 9)						
PARAMETER	PROGRAM n (n=1 to 10)	11	VALUE n.10	Setpoint 10 (end of time segment 10)						
PARAMETER	PROGRAM n (n=1 to 10)	12	VALUE n.11	Setpoint 11 (end of time segment 11)						
PARAMETER	PROGRAM n (n=1 to 10)	13	VALUE n.12	Setpoint 12 (end of time segment 12)						
PARAMETER	PROGRAM n (n=1 to 10)	14	VALUE n.13	Setpoint 13 (end of time segment 13)						
PARAMETER	PROGRAM n (n=1 to 10)	15	VALUE n.14	Setpoint 14 (end of time segment 14)						
PARAMETER	PROGRAM n (n=1 to 10)	16	VALUE n.15	Setpoint 15 (end of time segment 15)						
PARAMETER	PROGRAM n (n=1 to 10)	17	TIME n.1	Duration time segment 1	0.00.00	99.59.59	h.mm.ss	1s	0.10.00	
PARAMETER	PROGRAM n (n=1 to 10)	18	TIME n.2	Duration time segment 2						
PARAMETER	PROGRAM n (n=1 to 10)	19	TIME n.3	Duration time segment 3						
PARAMETER	PROGRAM n (n=1 to 10)	20	TIME n.4	Duration time segment 4						
PARAMETER	PROGRAM n (n=1 to 10)	21	TIME n.5	Duration time segment 5						
PARAMETER	PROGRAM n (n=1 to 10)	22	TIME n.6	Duration time segment 6						
PARAMETER	PROGRAM n (n=1 to 10)	23	TIME n.7	Duration time segment 7						
PARAMETER	PROGRAM n (n=1 to 10)	24	TIME n.8	Duration time segment 8						
PARAMETER	PROGRAM n (n=1 to 10)	25	TIME n.9	Duration time segment 9						
PARAMETER	PROGRAM n (n=1 to 10)	26	TIME n.10	Duration time segment 10						
PARAMETER	PROGRAM n (n=1 to 10)	27	TIME n.11	Duration time segment 11						
PARAMETER	PROGRAM n (n=1 to 10)	28	TIME n.12	Duration time segment 12						
PARAMETER	PROGRAM n (n=1 to 10)	29	TIME n.13	Duration time segment 13						
PARAMETER	PROGRAM n (n=1 to 10)	30	TIME n.14	Duration time segment 14						
PARAMETER	PROGRAM n (n=1 to 10)	31	TIME n.15	Duration time segment 15						

15 time segments

1.menu	2.menu	parameter number	text	description	range min.	range max.	unit	maxi-mum reso-lution	factory setting	user setting
PARAMETER	PROGRAM n (n=1 to 10)	32	SEGMENT_ BIN	Binary track (time segment 1)	0 = hexadec 2#0000	15 = hexadec 2# I I I I	none	1	4 binary tracks Default value=0 value: track4 track3 track2 track1 0: 0 0 0 0 1: 0 0 0 I 2: 0 0 I 0 3: 0 0 I I 4: 0 I 0 0 5: 0 I 0 I 6: 0 I I 0 7: 0 I I I 8: I 0 0 0 9: I 0 0 I 10: I 0 I 0 11: I 0 I I 12: I I 0 0 13: I I 0 I 14: I I I 0 15: I I I I	
		33	SEGMENT2_BIN	Binary track (time segment 2)						
		34	SEGMENT3_BIN	Binary track (time segment 3)						
		35	SEGMENT4_BIN	Binary track (time segment 4)						
		36	SEGMENT5_BIN	Binary track (time segment 5)						
		37	SEGMENT6_BIN	Binary track (time segment 6)						
		38	SEGMENT7_BIN	Binary track (time segment 7)						
		39	SEGMENT8_BIN	Binary track (time segment 8)						
		40	SEGMENT9_BIN	Binary track (time segment 9)						
		41	SEGMENT10_BIN	Binary track (time segment 10)						
		42	SEGMENT11_BIN	Binary track (time segment 11)						
		43	SEGMENT12_BIN	Binary track (time segment 12)						
		44	SEGMENT13_BIN	Binary track (time segment 13)						
		45	SEGMENT14_BIN	Binary track (time segment 14)						
		46	SEGMENT15_BIN	Binary track (time segment 15)						
		47	PGR.LOOP_BEG	From time segment	1	14	none	1	1	
		48	PRG.LOOP_END	up to time segment	2	15	none	1	15	
		49	# OF LOOPS	Number of loop executions	1	9999	none	1	1	
		50	TOL.SEG1	Tolerance segment 1	0	99999	EU	1	99999	
		51	TOL.SEG2	Tolerance segment 2						
		52	TOL.SEG3	Tolerance segment 3						
		53	TOL.SEG4	Tolerance segment 4						
		54	TOL.SEG5	Tolerance segment 5						
		55	TOL.SEG6	Tolerance segment 6						
		56	TOL.SEG7	Tolerance segment 7						
		57	TOL.SEG8	Tolerance segment 8						
		58	TOL.SEG9	Tolerance segment 9						
		59	TOL.SEG10	Tolerance segment 10						
		60	TOL.SEG11	Tolerance segment 11						
		61	TOL.SEG12	Tolerance segment 12						
		62	TOL.SEG13	Tolerance segment 13						
		63	TOL.SEG14	Tolerance segment 14						
		64	TOL.SEG15	Tolerance segment 15						

Binary tracks (see also CONF/LOOPm/B11/Q10 to Q13)

Loops

Tolerance

Is the deviation between the PV and the programmer SP bigger than the adjusted tolerance, the program will be frozen until the PV reaches the tolerance to the programmer SP.

20 Error codes

20.1 Device errors

Errors occurring during read or write actions in the non-volatile flash memory will be indicated in the top line of the display with the message

!Error ....

where the four periods represent the four-digit error code assigned to the error. Refer to 20.1.1 and 20.1.2 for a description of the respective errors, the possible reasons, and the recommended steps. If the characters “xy“ appear in the error code, this means that a detailed description of the respective error is available in table19-1.

If none of the recommended steps can solve your problem, please contact the manufacturer and provide the following information:

– instrument version
– firmware version
– IBIS_ R/IBIS_ R+ revision
– actions taken
– configuration
– project
– error code

20.1.1 Error codes

Error code	Description	Recommended steps
32	Configuration download failed.	Set device to factory setting and repeat download after approximately 2 minutes.
3100	Not enough flash memory available for saving the configuration data.	Set device to factory setting and repeat download after approximately 2 minutes or reduce configuration and try again
3200, 3201	Internal processing action failed.	Inform manufacturer.
41xy	Error when saving the project header.	Inform manufacturer.
42xy	Error when saving the list configuration.	Inform manufacturer.
43xy, 44xy	Error when saving the project version data.	Inform manufacturer.
45yx	Error when saving the hardware configuration.	Inform manufacturer.
47xy		
48xy	Error when saving changes of the online parameters.	Inform manufacturer.
49xy		
61xy	Project header cannot be read.	
62xy	List configuration cannot be read.	
63xy	Project version data cannot be read.	
64xy		
65xy	Hardware configuration cannot be read.	
68xy	Changes of the online parameters cannot be read.	
69xy		
80xy	General hardware error.	Return device to manufacturer for repair.

81xy	Flash memory cannot be initialized completely.	
82xy	Flash memory completely erased due to serious error.	
83xy 84xy 85xy 86xy 87xy		

Fig.20-1 Device error codes

20.1.2 Error details

xy	**Error description** (valid for the device flash memory)
0	CRC error when reading a block.
1	No free block found when writing.
2	Function call with invalid block number.
3	Function call with too big address offset.
4	Flash memory fault.
5	Flash memory does not exist.
6	(Memory) block not found.
7	Specified file not found.
8	(Memory) block cannot be deleted.
9	Power-fail
10	Power-fail in the initialization phase.
20	(Memory) block contents cannot be deleted.
21 - 24, 29	Uncorrectable write error.
30	No free memory space available.
31 -34, 36,39	Internal error
38	Requested service is not supported

Fig.20-2 Error details

20.2 Error codes of the controller selftune routine

Errors are output in the form S.Par.Err.X, where X is an error code between 1 and 5.

Error code	Error description	Recommended steps
1	General error The requirements for trouble-free selftuning are not fully met. However, the reason for this cannot be determined exactly.	Restart selftuning.
2	Noise band The noise band automatically determined in the initial phase of the selftuning routine turned out to be too small. This may happen if disturbances increase while the selftuning procedure is in progress.	Restart selftuning.
3	Changes of the controlled variable The controlled system does not change sufficiently to permit proper analysis of its behavior.	The configurable change of the output variable should be increased.
4	Time-out Within a given time of 10 hours there were no changes of the controlled system.	Check the connection and configuration of the measuring values for possible errors. If no errors can be found, the controlled system cannot be identified due to a dead time that is too long.
5	No damping No damping of the controlled system occurred within the given time window. However, to be able to identify the controlled system, it must be stationary.	Exit the selftuning routine and set the control loop to “manual“ mode. Wait until the controlled systems do no longer change “noticeably“, then restart selftuning.

Table 20-1 Error codes of controller selftuning

20.3 Error codes of the input/output level

Error code	Error description	Recommended steps
E_AI01C 3	At least one calibrated value of AI01 has violated the low limit. Only the values required according to the AI01-F01 configuration are checked here.	The input can be recalibrated via the front panel by using the respective signal transmitters.
E_AI01C 4	At least one calibrated value of AI01 has violated the high limit. Only the values required according to the AI01-F01 configuration are checked here.	see E_AI01C 3
E_AI02C 3	At least one calibrated value of AI02 has violated the low limit.	see E_AI01C 3
E_AI02C 4	At least one calibrated value of AI02 has violated the high limit.	see E_AI02C 3
E_BIOC 3	At least one calibrated value from BIO01 to DO05 has violated the low limit.	Calibration through the manufacturer required.
E_BIOC 4	At least one calibrated value from BIO01 to DO05 has violated the high limit.	see E_BIOC 3

Upon power on the device checks the calibrated values for the inputs and outputs. If any errors are detected, they are indicated as plain text (see table).

Table 20-2 Error codes of the input/output level

Inputs

Common data:
without electronical isolation
Resolution ≤ 0.01 %
Accuracy (referred to nominal range) ≤ 0.2 %
Temperature effects ≤ 0.2 %/10 °C
Hardware input filter limit frequency 7 Hz

Analog:
Universal input AI01
connected to internal device ground

used for standard signal
0/4...20 mA at 50 Ω ±1 %

Overcurrent/polarity reversal protection
up to ± 40 mA

Linearization, square-rooting
configurable

at 4...20 mA Line break monitoring with configurable reaction

used for thermocouples

Types	Temperature range	Voltage range	Typical accuracy
J	-200...1200 °C	77.43 mV	≤ 0.2 %
E	-200...1000 °C	85.18 mV	≤ 0.2 %
K	-200...1400 °C	61.53 mV	≤ 0.2 %
L	-200...1000 °C	78.21 mV	≤ 0.2 %
U	-200... 600 °C	40.00 mV	≤ 0.3 %
R	0...1700 °C	20.22 mV	≤ 0.5 %
S	0...1800 °C	18.72 mV	≤ 0.5 %
T	-200... 400 °C	26.47 mV	≤ 0.4 %
B	0...1800 °C	13.24 mV	≤ 0.6 %
D	0...2300 °C	36.92 mV	≤ 0.4 %

Reference junction compensation
internal or external: 0, 20, 50 or 60 °C

Internal reference junction

Error limit	± 1 °C/10 K
Reference temperature	22 °C ± 1 °C
Ambient temperature	0...50 °C

Sensor break monitoring
with configurable reaction

Used for resistance thermometer Pt100 DIN

Measuring range
-200.0...+200.0 °C
-200.0...+800.0 °C

Measuring current
≤ 1 mA

Measuring circuit: 2-wire circuit to 40 Ω line resistance
Line balancing: by software

3-wire circuit: for symmetrical lines up to 3 x 10 Ω

used for resistance teletransmitter (potentiometer)
Measuring ranges
150 Ω, (75...200 Ω); 1.5 kΩ (0.75...2 kΩ)

Measuring current: ≤ 1 mA
other data as resistance thermometer

Optional universal input 2 (AI02)
with integrated transmitter power supply
Input for mA, Pt100, thermocouple or potentiometer, technical data as AI01, but with electronical isolation.

Permissible common-mode voltage against device ground
± 4 V DC

Permissible differential-mode voltage Uss (50 Hz)
50 mV

Transmitter power supply
output voltage 20...25 V DC, 50 mA

Short-circuit proof
automatic cut off on overload

binary:
2 binary inputs/outputs (B01/B02)
Direct/reverse function configurable

Input DIN 19240	Rated signal V DC	Voltage range (V)	Current range
Rated level	24	20.4...28.8	approx. 1 mA
1-signal	24	13.0...30.2	approx. 1 mA
0-signal	0	- 3.0... 5.0	< 0.2 mA

Output DIN 19240	Rated signal V DC	Voltage range (V)	Current range
Rated level	24 ext.	20.4...28.8	100 mA
1-signal	24	13.0...30.2	0...max. mA
0-signal	0	- 3.0... 5.0	0...0.15 mA

Switching frequency ≤ 8 Hz

Outputs

Analog output AO01
galvanical isolated

Control output or retransmission
0/4...20 mA at max. 750 Ω, short-circuit and open-circuit proof

Control range
0...≥ 21 mA

Load-dependency
0.1 %/100 Ω

Resolution
≥ 0.01 %

binary:
see inputs

3 relays with NO contact (B03/B04/B05)
for max. 250 V AC, 3 A resistive load
for min. ≥ 12 V AC, ≥ 100 mA
Contact material AgCdO

Programmer

10 programs can be stored
each program:
15 segments
Set point in physical units
Segment time 0...99:99:9 hours, four digital tracks

Serial interfaces

TTL interface for connection to PC with fixed telegram format matching parameter setting and configuration program IBIS-R+ (see Data Sheet 62-6.70 EN).
For adapter cable see ordering information. Bus capable RS 485 interface retrofittable (see modules)

CPU data

Measured value and correction value resolution
≤ 0.01 %

Cycle time
approx. 100 ms

Configuration and data backup
Flash-EPROM

Power supply

115 to 230 V AC (90...260 V), 47...63 Hz

Power consumption:	
Max.	13.3 VA (11 W)
Power failure bridging	≥ 150 ms at ≥ 180 V AC

24 V UC

24 V DC	-25...+30 %, residual ripple ≤ ± 3 V_{ss}
24 V AC	-15...+10 %, 47...63 Hz
Power consumption:	
Max.	15 VA (12 W)
Power failure bridging	≥ 20 ms at 0.85 x U_{nom}

Power factor cosφ = 0.7

Safety
The device needs no external safety of power supply

Environmental conditions

Climatic class
3K3 to EN 60721-3-3

Ambient temperature
0...50 °C

Storage and transport temperature
-20...70 °C

Relative humidity
< 85 %, short-term to 95 %, no condensation

Minimum atmospheric pressure
80 kPa

Electromagnetic compatibility

Meets protection requirements of EMC directive 89/336/EEC, 5/89

Interference resistance EN 61326-1

Interference emission EN 50081-1, 1/92
(referred to: EN 55011, class B)
Max. interference resistance, if device is mounted in a metal panel

Connection, case, safety

Degree of protection to DIN EN 60529
- Front panel: IP 65
- Case: IP 30
- Terminals: IP 20

Electrical safety

Class of protection 1 to EN 61010 T.1 (VDE 0411 T.1, March 1994)

Clearances and creepage distances as per EN for overvoltage category 3, degree of contamination 2

All inputs and outputs, including the interface and the transmitter feed but excepting all relay outputs are functional extra-low voltage circuits to DIN VDE 0100, part 410. The safe isolation of these circuits meets the requirements to DIN VDE 0106, part 101.

Mechanical stress features

to DIN IEC 68, part 2-27 and 68-2-6
- Shock 30 g/18 ms; Vibration 2 g/0.15 mm/5...150 Hz

Case dimensions
- Front panel 96 mm x 96 mm
- Installed depth 145 mm

Panel cutout
- 92 mm x 92 mm to DIN 43700

Mounting
- in panel
- Horizontal high-density construction possible
- Vertical spacing 36 mm
- Fixing with straining screws

Electrical connections

Plug-in screw terminals
- for wire or stranded wire to 1.5 mm^2, coded

Power supply
- 2.5 mm^2

No shielded cables required – except for interface leads

Mounting orientation
- any

Weight
- approx. 600 g without modules
- additional module approx. 40 g
- additional relay module approx. 80 g

Scope of supply and delivery

2 straining screws (integrated in case), Operating Manual and plug-in screw terminals

Modules

One of the modules listed below can be plugged in for extending the I/O or for using digital communication.

Analog inputs

Module AI4_mA=AE4_mA for standard signals

4 inputs
0/4...20 mA electronically isolated

Input resistance approx. 50 Ω

Signal resolution ≤ 0.01 % for 20 mA

Permissible common-mode voltage ≤ ± 4 V against device ground

Permissible differential-mode voltage 50 mV_{ss}

Destruction proof
Input current < 50 mA
Voltage between input and ground ± 50 V

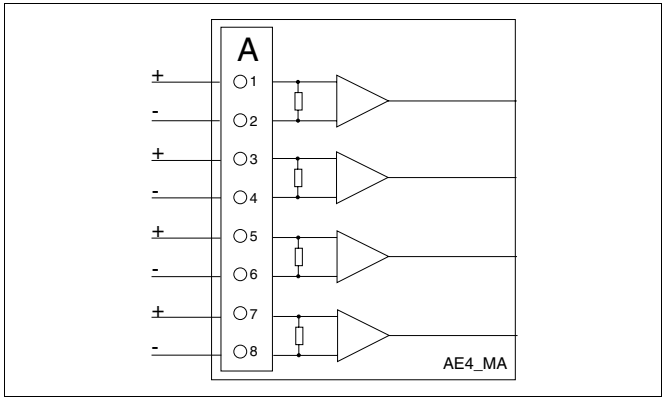

Module 4_mV =AE4_mV for thermocouples

4 inputs
-10...80 mV, with electronical isolation

Signal resolution
20.000 for -10...80 mV

Input resistance
approx. 5 MΩ

Permissible common-mode voltage ≤ ± 4 V against device ground

Permissible differential-mode voltage 50 mV_{ss}

Destruction proof
Voltage at one input ± 10 V
Voltage between input and ground ± 50 V

Break monitoring
configurable reaction

Reference junction compensation
configurable, internal or external 0, 20, 50 or 60 °C

Linearization configurable like AI01

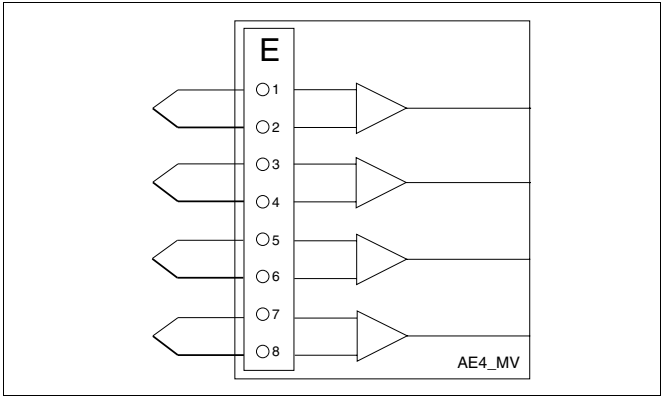

Module AI2_mA/mV-OI=AE2_mA/mV_TR
for mA signals or thermocouple with electrical isolation

2 inputs with electrical isolation
0/4...20 mA or -10...80 mV (changeable by means of jumpers)

Input resistance at
20 mA: 25 Ω; -10...80 mV: approx. 5 MΩ

Dielectric strength of input and output leads against each other and against grounded conductor:

Test voltage	500 V AC
Continuous operation	45 V AC

Technical data as modules 4_MV or 4_MA

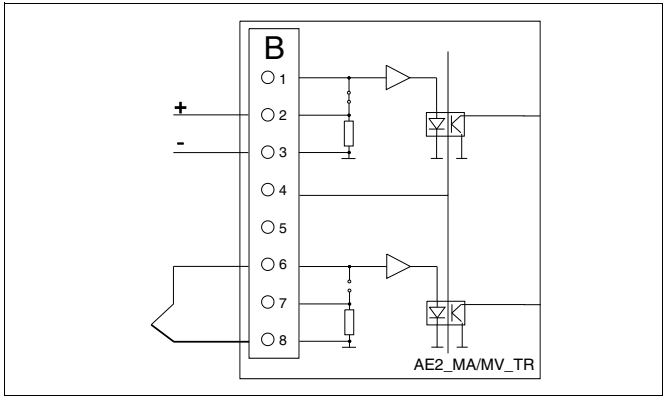

Module AI4_PT_2W=AE4_PT_2L for RTD 2-wires

4 inputs
for Pt100 in 2-wire circuit

Range: 0...400 Ω

Permissible differential mode voltage: : 100 mV_{ss}

Signal resolution ≤ 0.01 % for 400 Ω

Measuring current ≤ 1.5 mA

Measuring range configurable
-200.0...+200.0 °C
0.0...+450.0 °C
-200.0...+800.0 °C

Line balancing by software

Sensor break and short-circuit monitoring
configurable reaction

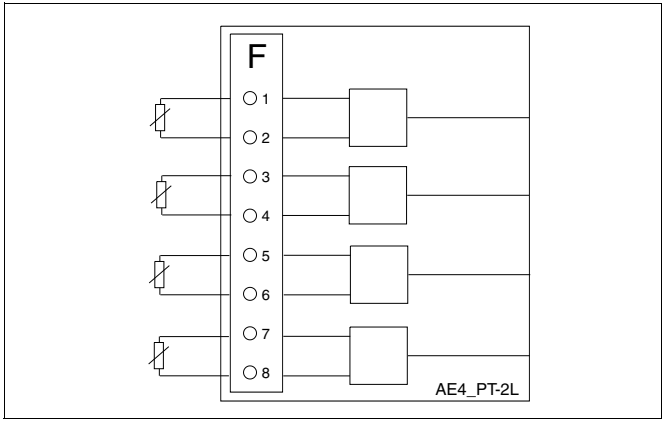

Module AI2_PT_3/4W=AE2_PT_3/4L for RTD 3-/4-wires

2 inputs
for Pt100 in 3- or 4-wire circuit or potentiometer

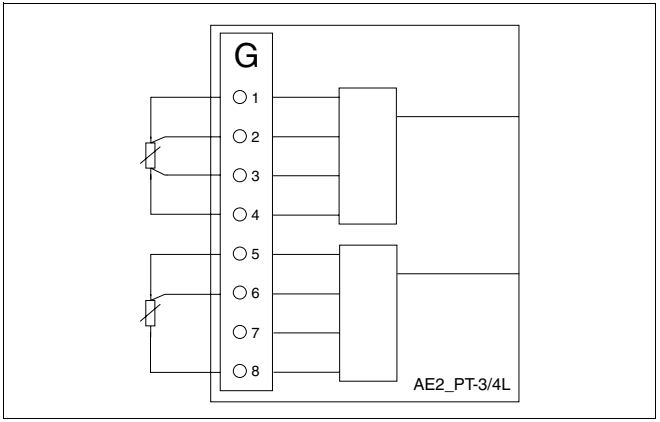

Technical data for Pt100 as module **AI4_PT_2_W**

Potentiometer R150: 0...150 Ω
Series resistance: 0...500
Measuring current < 1.5 mA
Potentiometer R1500: 0...1500 Ω
Series resistance: 0...1500 Ω
Measuring current < 0.5 mA

Binary inputs/outputs

Module BIO6_BIN=BE06_BIN

6 binary inputs/outputs, opto isolated
Configurable as input or output, direct or reverse action

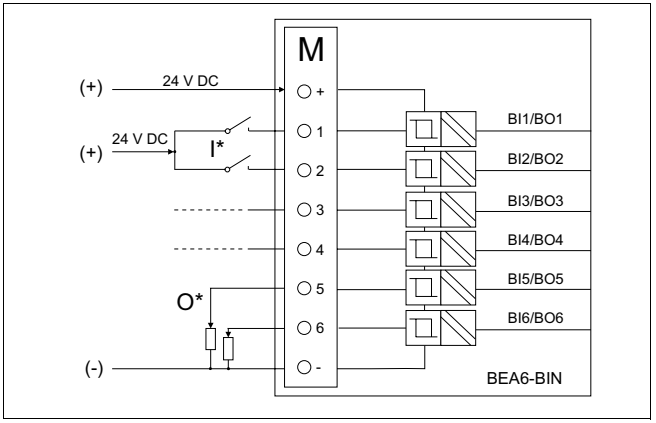

*) Connection example: I = binary inputs; O = binary outputs

Input DIN 19240	Rated signal V DC	Voltage range (V)	Current range
Rated level	24	20.4...28.8	approx. 3 mA
1-signal	24	13.0...30.2	approx. 3 mA
0-signal	0	-3.0...5.0	≤ 0.1 mA

Output DIN 19240	Rated signal V DC	Voltage range (V)	Current range
Rated level	24 ext	20.4...28.8	100 mA
1-Signal	24	13.0...30.2	0...max. mA
0-Signal	0	-3.0...5.0	0...0.1 mA

Module BO4_REL=BA4_REL

4 relays
with NO contact for max. 250 V AC, 1 A resistive load

Built-in spark-quenching: 0.022 µF + 100 Ω

For max. 250 V, max. 1 A at cosφ = 0.9

Contact material AgCdO

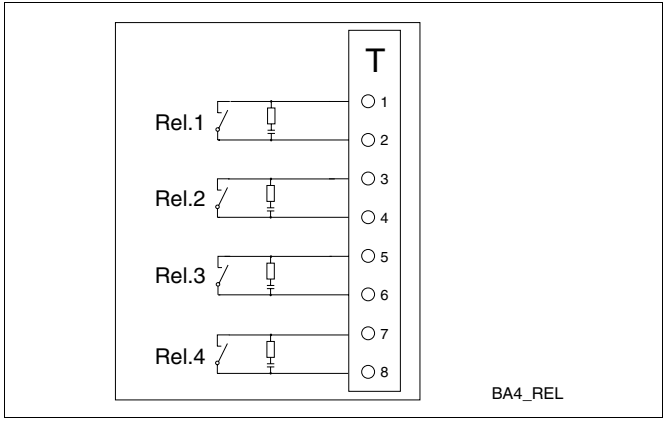

Module AI4_F=AE4_F

4 inputs for:

Frequency (1/4 inputs)

Range 1 input	0...20 kHz
Range 4 inputs	0...10 kHz
Signal resolution	1 Hz

Period (1-4 inputs)

Range	0...20 s
Signal resolution	1 ms

Pulses (1-4 inputs)/incremental angle (2 inputs)
Range: 0...20.000 pulses/cycle time
min. pulse length: 50 µs

Absolute incremental angle (1 input)
Range: 0...20.000 pulses
min. pulse length: 50 µs

Types of input signals:

Max. 2 Namur inputs according to DIN 19234

Open circuit voltage	U_i = 9.5 V
Internal resistance	R_i = 1 kΩ
Signal range	L = 0...1.2 mA/H = 2.1...4.0 mA

Max. 4 digital inputs according to DIN 19240 (0/24 V DC)

Input resistance	R_E > 6 kΩ
Signal range	L = -3...5 V/H = 13...20.2 V

Max. 4 digital inputs TTL (0/5 V DC)

Input resistance	R_E > 6 kΩ
Signal range	L = 0...0.8 V/H = 3.5...24 V

Accuracy: ± 0.1 %

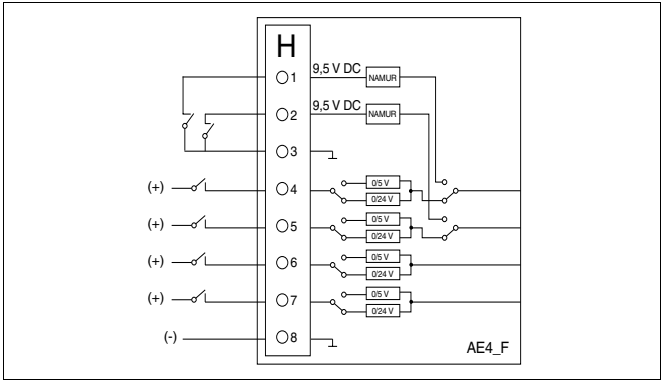

Analog outputs

Module AO3_mA=AA3_mA

Triple current output 0/4...20 mA at 750 Ω
Signal resolution ≤ 0.02 % for 20 mA
Load dependency 0.1 %/100 Ω
Output monitoring, reaction configurable

Module AO3_V=AA3_V

Triple voltage output 0/2...10 V ≥ 5 kΩ

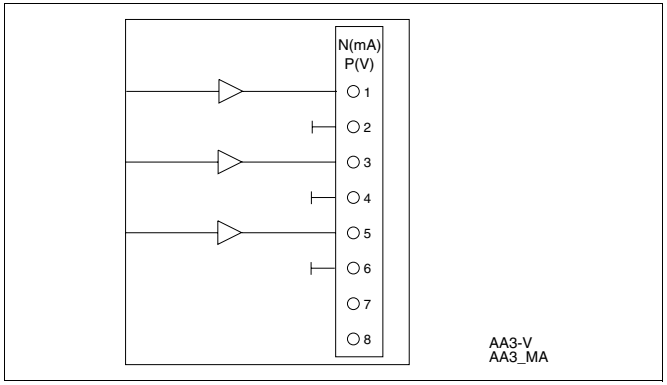

Interface modules

Module RS 485 or RS 232

Interface module in accordance with RS 485 or RS 232 specification. Electrically isolated. Standard protocol: MODBUS-RTU.

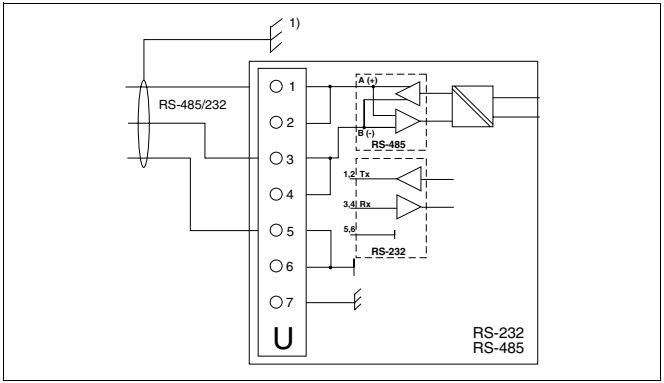

Module PROFIBUS-DP/DP-V1 (Slave)

Module with full functional capabilities of DIN 19245, parts 1 to 4.
Transmission rate up to 1.5 MBaud.
Bus terminating adapter see accessories on page 10

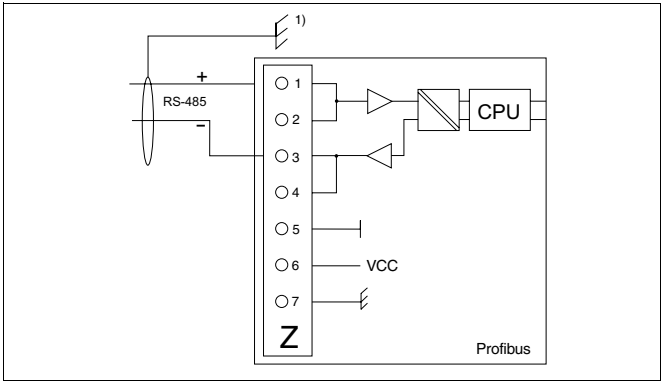

22 Packaging for transport or return to the manufacturer

If the original packing material is no longer available, wrap Digitric 100 in a padded plastic film or corrugated paper board and place it in a box of sufficient size lined with a shock-absorbing material (e.g. foam rubber). The thickness of the shock-absorber should be in accordance with the device weight and the type of shipment.

The box must be handled with care and has to be labeled accordingly.

For overseas shipment always add a desiccant (e.g. silica gel) and wrap the device and the desiccant bag in a heat-sealed polyethylene foil of 0.2 mm. Adapt the amount of desiccant to the packing volume and the expected transport time (at least sufficient for 3 months). Additionally line the box with a layer of union paper.

23 Index

A

Adding input AI02 43
Additional variants in the template 152
Adjusting a teletransmitter 139
Adjustment 138
AI definition 93
Alarm handling 49
Alarm variants in the template 154
Analog input module 2 × mA or thermocouple / mV 23
Analog input module 2 ¥ Pt 100, 3-wire/4-wire 25
Analog input module 4 × mA 23
Analog input module 4 × Pt100, 2-wire 24
Analog input module 4 × thermocouple 24
Analog output module 3 × mA 27
Analog output module 3 × V 27
Assembling of a module 35
Automatic characteristic curve 98
Automatic mode 50

B

Basic structure of the list configuration 167
Basic variants in the template 151
Binary input/output module (with electrical isolation) 28
Binary output module 4 × relay 28

C

Calibration 141
Characteristic curve 97
Computer setpoint 99
Configuration 67, 86
Configuration examples 90
Configuration for drum water level 122
Configuration for gas and steam 121
Configuration for water mass flow 122
Connecting 19
Connecting the power supply 31

Continuous controller 134
Control outputs 130
D
DDC control 59
Derivative gain Gd 78
Derivative time Td 78
desired language 148
Dimension 95
Disabling the password 44
Display unit 137
E
Error codes 190
Error codes of the controller selftune routine 194
Error information on the display 64
F
Factory setting 166
Filtering 95
Fixed-value control 104
Forgotten password 75
Frequency input module 4 × F 26
G
Gain 78
Gain scheduling 117
H
Hardware 91
Hardware information 136
Heating - off - cooling 132
How to use this instruction 10
I
Indication 2 . . . . . 67, 68
Inputs/outputs 69
Installing 15
L
Library identification 71

M
mA inputs 96
Manual characteristic 97
Manual mode 51
Manual reset MR 78
Manual station 61
Master reset 144
Menu structure 66
Modifying modules 42
Modules 22
Motorized valve control 133
Mounting 16
Mounting instructions 17
Mounting the module 34
Multi-component control 108
Multiplication 115
N
Navigating through the template 149
O
Operate 2 . . . . . 67, 72
Operation 45
P
Packaging for transport 205
Panel cutout 16
Parameter 67
Parameter changeover/control 117
Parameterization 76
Parameterization menu 76
Password 92
Password protection 74
Plausibility 143
Positioner 63, 133
PROFIBUS 30
Programmer 55, 100

Q
Quick configuration 145, 146
R
Ratio control 110
Ratio controller 53
Ratio station 62
Remote control (Profibus or Modbus) 63
Reset time Tr 78
Resistance thermometer input 96
RS-232 interface module 29
RS-485 interface module 30
S
safety instructions 12
Safety instructions in accordance with DIN VDE 34
Selecting and changing parameters 77
Self-tune 81
Selftune 67
Service 67, 135
Setpoint 1 98
Setpoint ramp 99
Setpoint SP2 to SP4 99
Setpoint station 62
Setpoints 52, 98
Signal connections for modules and PC 21
Signal connections of the basic unit 19
State correction 120
Step controller 133
Supervisor 67, 142
T
Tables for menus 158
Tables for the configuration menu 166
Tables for the parameter setting menu 185
Technical data 196
Teletransmitter input 97
Template 145, 146
Thermocouple input 96

Three-point controller 132
Two-point controller 131
Type of analog input AI01 and AI02 in the template 156

U

Updating the firmware 44

V

Version display 71

ABB Automation Products GmbH
Hoeseler Platz 2, 42579 Heiligenhaus, Germany
Phone +49 2056 12-5181; Fax +49 2056 12-5081
http://www.abb.com

Subject to technical changes
Printed in the Fed. Rep. of Germany
42/61-10010 EN Rev. 02
Edition 05.02