INDICATOR TYPE RXSK 2H

GENERAL

Indicator type RXSK 2H is used for indication and alarm in distance relay RAZFE and directional wave detector RALDA. The indicator has ten el ectromechani call indicating flacs with associated printed-board-assembly relays for electrical alarm function. In addition, there are two printed-board-assembly relays with no associated flag.

DESIGN AND MODE OF OPERATION

The indicating flag is basically a circular disc, which is turnable on bearings in a base. The disc, which is permanently magnetized, is black on one side and red or yellow on the other. The base is placed in the airgap between two magnetic poles. The direction of the magnetic field can be altered and consequently the disc will turn and show its other side.

The current through the magnetizing windings can be of very short duration since the poles will maintain a high value of remanence which will keep the disc in position.

The windings are connected to the inputs via capacitors, which will,auiomatically limit the current to a pulse.

The indication has inherently a memory function and is therefore, once initiated, independent of missing auxiliary voltage or input signal.

Resetting impulse is via a relay at the same time fed to all Indicating discs/fiags and can be given either from a push-button or an external contact.

Indicating flags with a still existing initiating signal will return after a possible resetting operation.

A so-called printed-board-assembly relay is associated to each indicating flag. Nine of the ten relays are connected in parallel with their indicating flags and are equipped with one contact each. These relays are in drop-out position if the input signal is missing or equal to 15 V. The relays will pick up and the flags turn with an input signal equal to zero. The tenth relay is connected to be in pick-up position with input 15 V and has a break contact. With input equal to zero, the relay will drop out and the flag turn. This feature is therefore suitable for the indication of auxiliary d.c. supply failure.

Legend plates can be selected according to figure 2. The flags are yellow except for the top and bottom flag in the right row, which are red.

Connection is shown in figure 1. Input control is made towards
Zero and auxiliary d.c. supply is 15V.

INSTALLATION

RXSK 2H is a plug-in unit size 4S 6C in the modular system COMBIFLEX.
S and C are modular units where the height S = 44.45 mm and the width C = 7 mm.
It is intended to be mounted in terminal bases type RX 2H or RX 4.

The bases are intended to be screwed to apparatus bars in equipment frames, cases or on panel.

TECHNICAL DATA

Rated voltage	15 V d.c.
Region of operation	80-110 % of rated voltage
Input control	Control is per-formed towards zero for nine of the relays and flags. The input signal must be capable of carrying a current of min. 500 mA during 0.5 ms and a current of min. 50 mA continuously,; The corresponding demands on the tenth input signal (terminal 318) are control towards zero min. 500 mA during min. 0.5 ms, and for continuous pick-up before indication towards positive voltage min. 50 mA.
Critical impulse time	< 0.5 ms for indicating flags < 7 ms for printed-board assembly relays

Operating time for printed-board-assembly relay

Pickup ≤ 7 ms

Dropout ≤ 5 ms

Contact data

Max. voltage between lines 300 V d.c./250 V a.c

Current carrying capacity

continuous I A

Ability to make and conduct

During 200 ms, L/R ≥ 10 ms 10 A

Breaking capacity

A.C. p.f. ≥0.1 max 220V 1 A

D.C. L/R ≤ 40 ms 48 V I A

55 v	I A
110 v	0.4 A
125 V	0.3 A
220 V	0.2 A
250 V	0.15 A

Permitted ambient temperature

- 25 °C to + 65 °C

Dielectric test voltage 2000 V 50 Hz I min

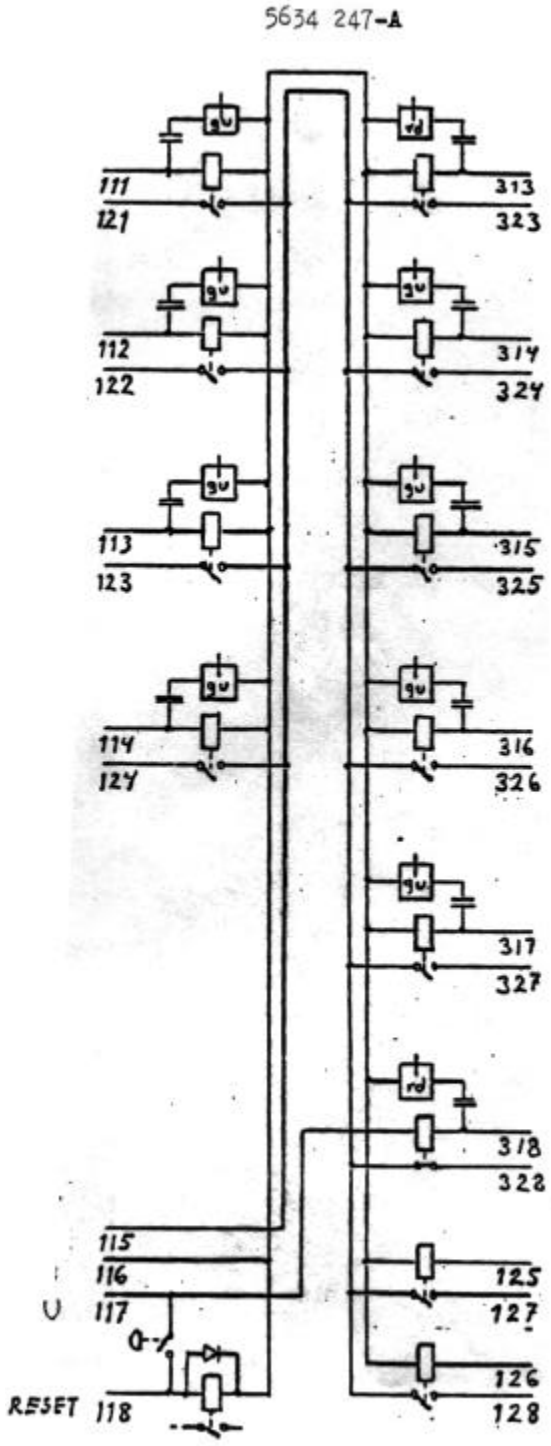

Figure 1 Circuit diagram

Gu = yellow
Rd = red

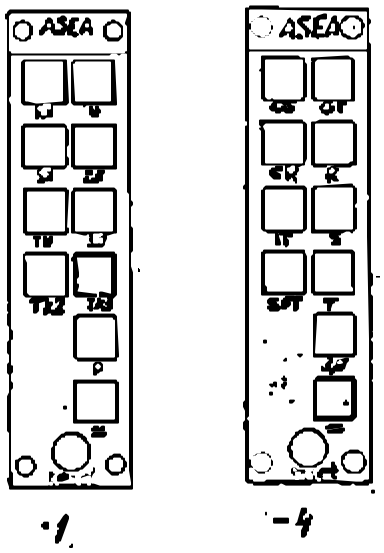

Figure 2 Legend plates and indicating flags

ASEA
Relay Division
S-721 83 Västerås Sweden
Tel. +46 21 100000