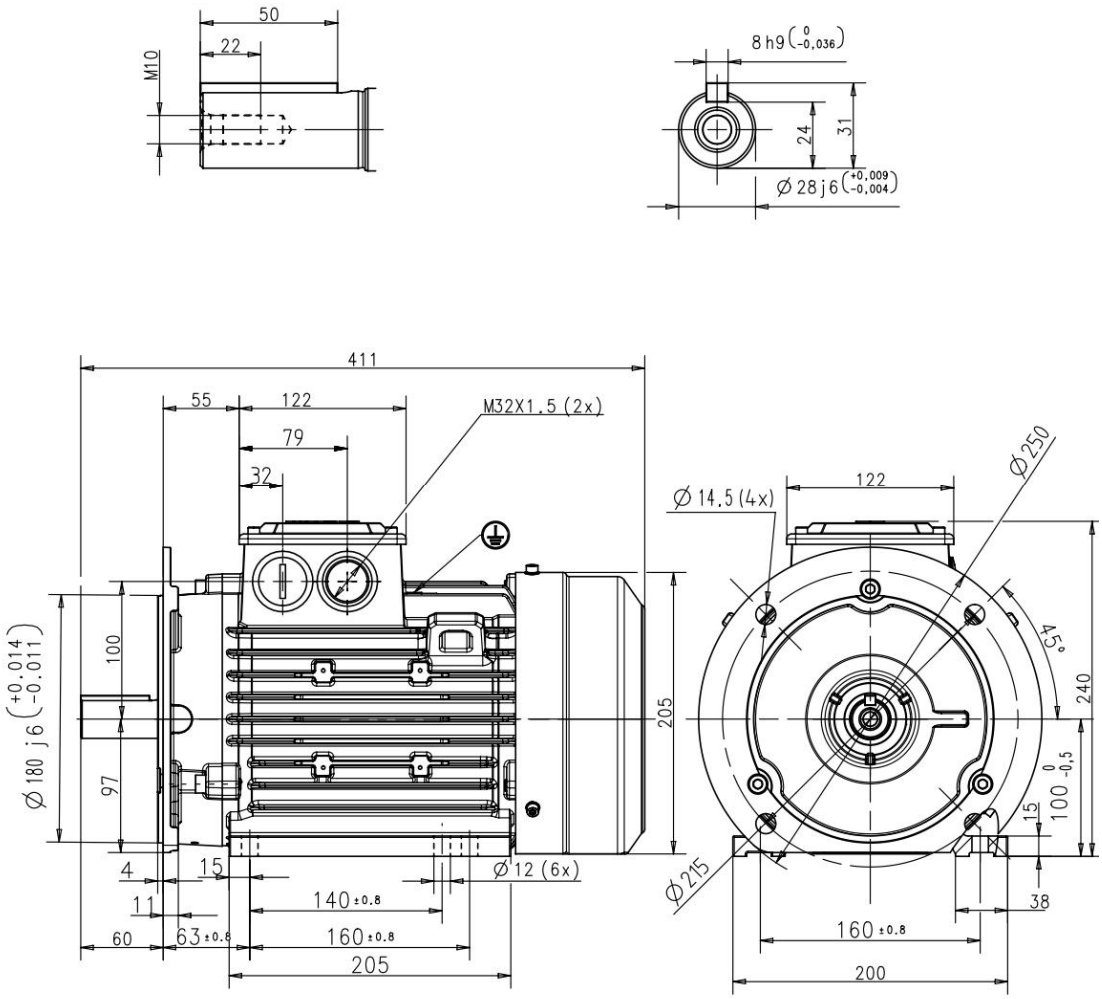

Additional information:

Dimension Print	Motor Type: IE3 M2BAX 100LK_2-6 B35,V15, V36	Document No: 3GZC500010-51 A 14 BA 100 A
Description: STANDARD SQUIRREL CAGE MOTOR VC320		

Unit:	ABB Motors and Generators	Issued by:	Jeff Wang	Replaces:
Date:	2016-01-29	Approved by:	Adam Zhu	Replaced by:

ABB Ltd.	Customer Reference:	ABB