S2C-H10
Integrierter Hilfskontakt
Integrated auxiliary contact
2CDS200970R0032

m3
m
m4

FR: A906513
IT: A065139
NO: 1634388
SE: E2100168
US: S2C-H10

4016779065139

Made in Bulgaria
保加利亚产品

MCB:	MCB*:	Switch-Disconnector:
S 200 ≤ 63 A	S 200 P	SD 200
S 200 M		
S 200 MT, S 200 MTR		
S 300 P	AFDD:	RCBO:
S 200 M UC	DS-ARC1	DS 201 (2019)

0.5 Nm

0.75 ... 2.5 mm²

6 mm

AC14	2 A/230 V
DC12/	1 A/50 V
DC13	2 A/30 V

MCB: Miniature Circuit Breaker
AFDD: Arc Fault Detection Device

DE: Integrierter Hilfskontakt 1 Schließer
EN: Integrated auxiliary contact 1NO
FR: Contact auxiliaire simple 1NO
IT: Contatto ausiliario sottoposto 1NA
ES: Contacto auxiliar integrado 1NA
CN: 辅助触点 GB/T 14048.5
RU: вспомогательный контакт нижний

DE: MCB / Schieber hell, transparent
EN: MCB / Slider bright, transparent

DE: MCB* / Schieber Schwarz
EN: MCB* / Slider black

DE: AFDD + RCBO / Schieber Braun
EN: AFDD + RCBO / Slider brown

EN: Warning! Installation by person with electro-technical expertise only.
DE: Warnung! Installation nur durch elektrotechnische Fachkraft.
IT: Avvertenza! Fare installare solo da un elett ricista qualificato.
FR: Avertissement! Installation uniquement par des personnes qualifiées en électro technique.
ES: ¡Advertencia! La instalación deberá ser realizada únicamente por electricistas especializados.

ABB Limited
Tower Court
Coventry
CV6 5NX, UK

ABB STOTZ-KONTAKT GmbH
Eppelheimer Str. 82
69123 Heidelberg
Germany
www.abb.com/lowvoltage

GHS2007024P0006

A **MCB / Switch Disconnector**

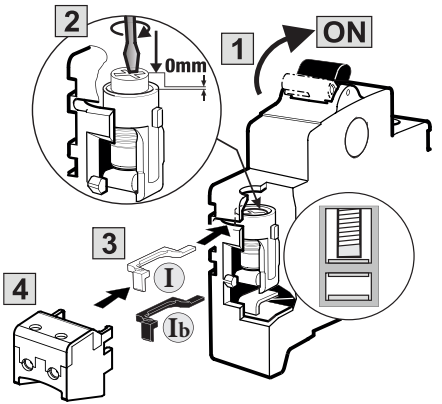

9AKK108466A4991

B

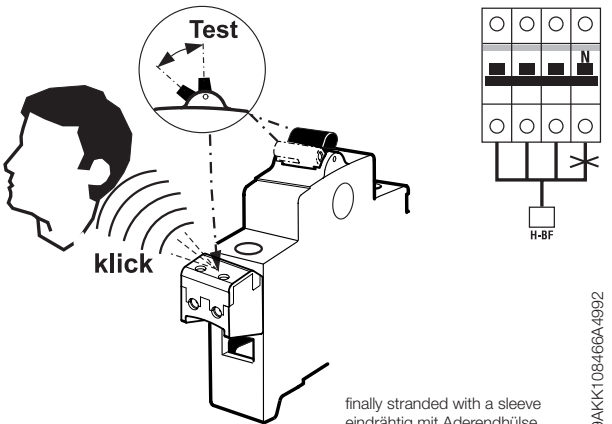

finally stranded with a sleeve
eindrähtig mit Aderendhülse

9AKK108466A4992

A **AFDD**

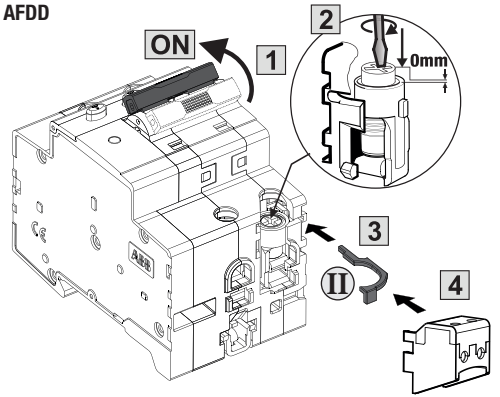

Combination AFDD + auxiliary without UL approval

9AKK108466A4994

A **RCBO**
DS 201 (2019)
2CSR24508...

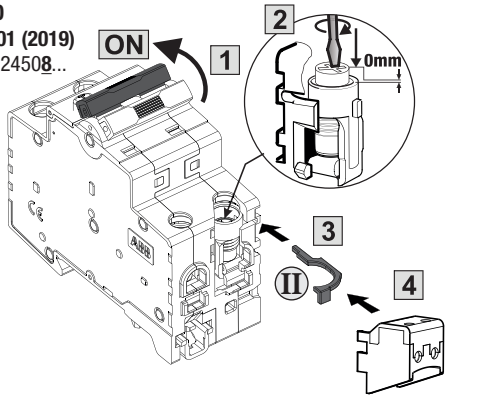

Combination RCBO + auxiliary without UL approval

2CDC022005F0019

B

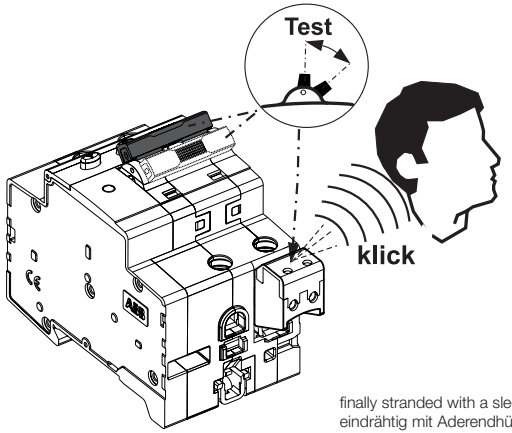

finally stranded with a sleeve
eindrähtig mit Aderendhülse

9AKK108466A4995

B

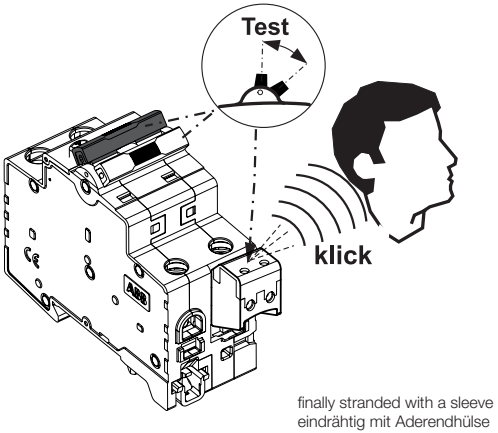

finally stranded with a sleeve
eindrähtig mit Aderendhülse

9AKK108466A4996