Doc. N.° 1SDH001000R0714 - L8775

SACE Emax 2

Protezione IP54 - E2.2-E4.2-E6.2
IP54 protection - E2.2-E4.2-E6.2
Durchsichtige Schutzabdeckung IP54 - E2.2-E4.2-E6.2
Protection IP54 - E2.2-E4.2-E6.2
Protección IP54 - E2.2-E4.2-E6.2

E2.2-E4.2-E6.2

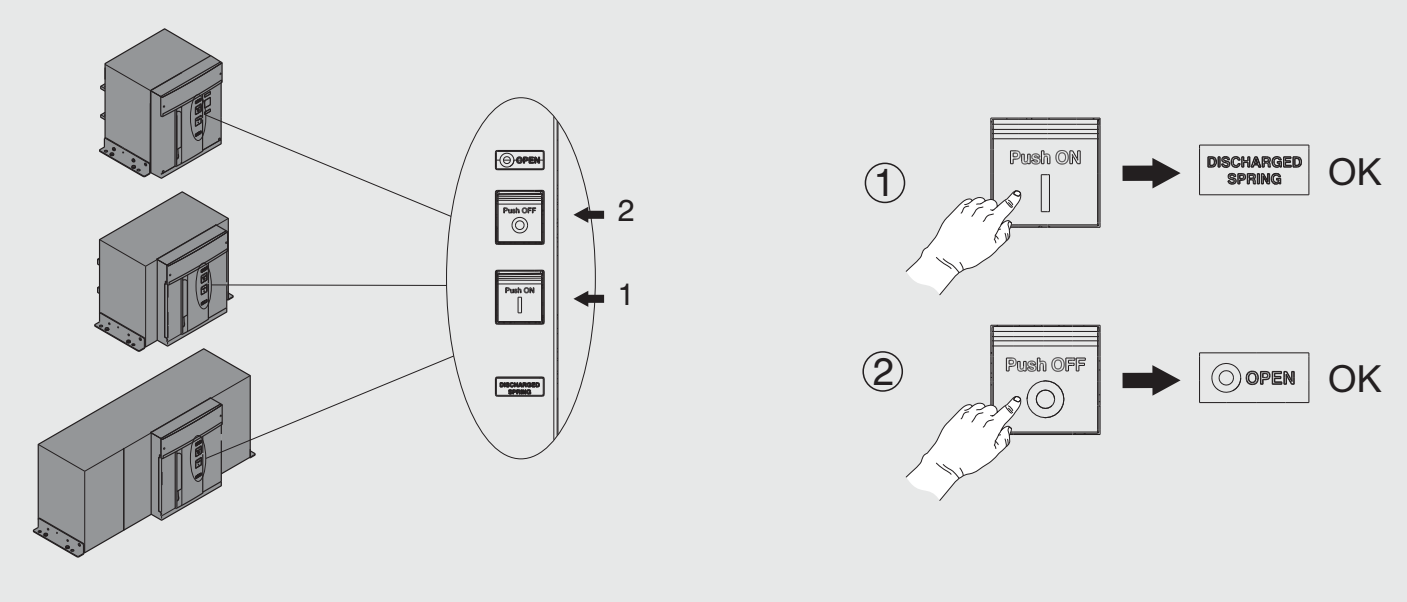

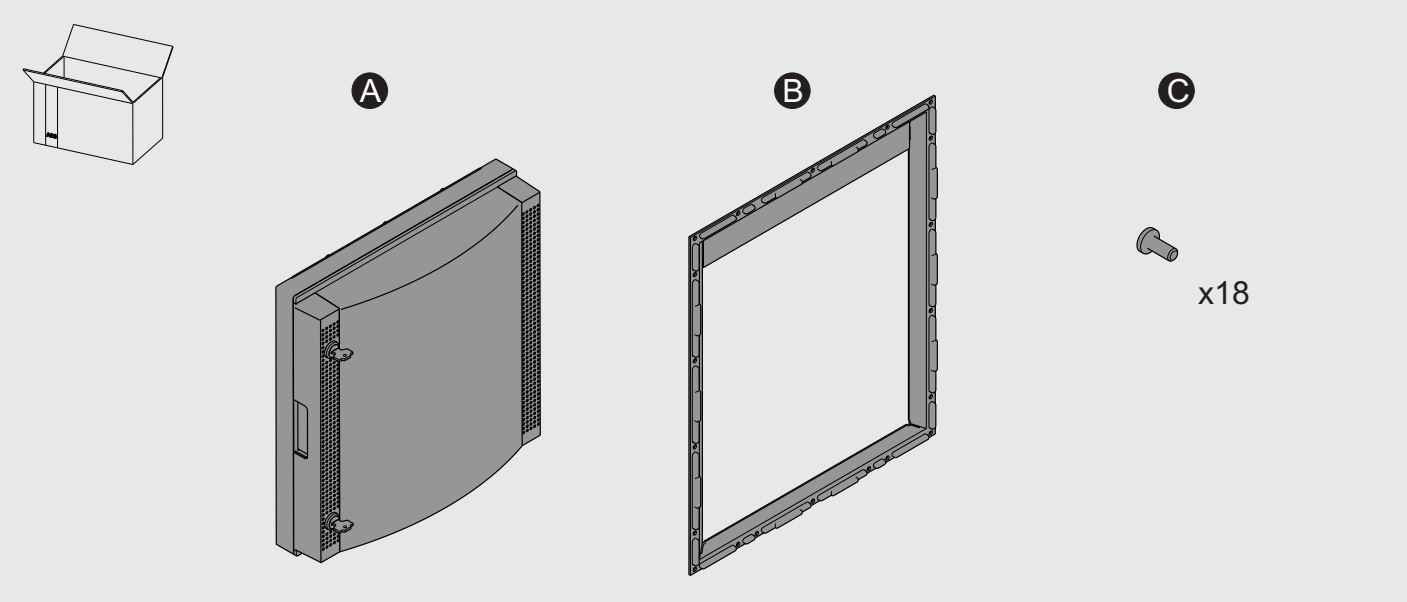

Power and productivity
for a better world™

1

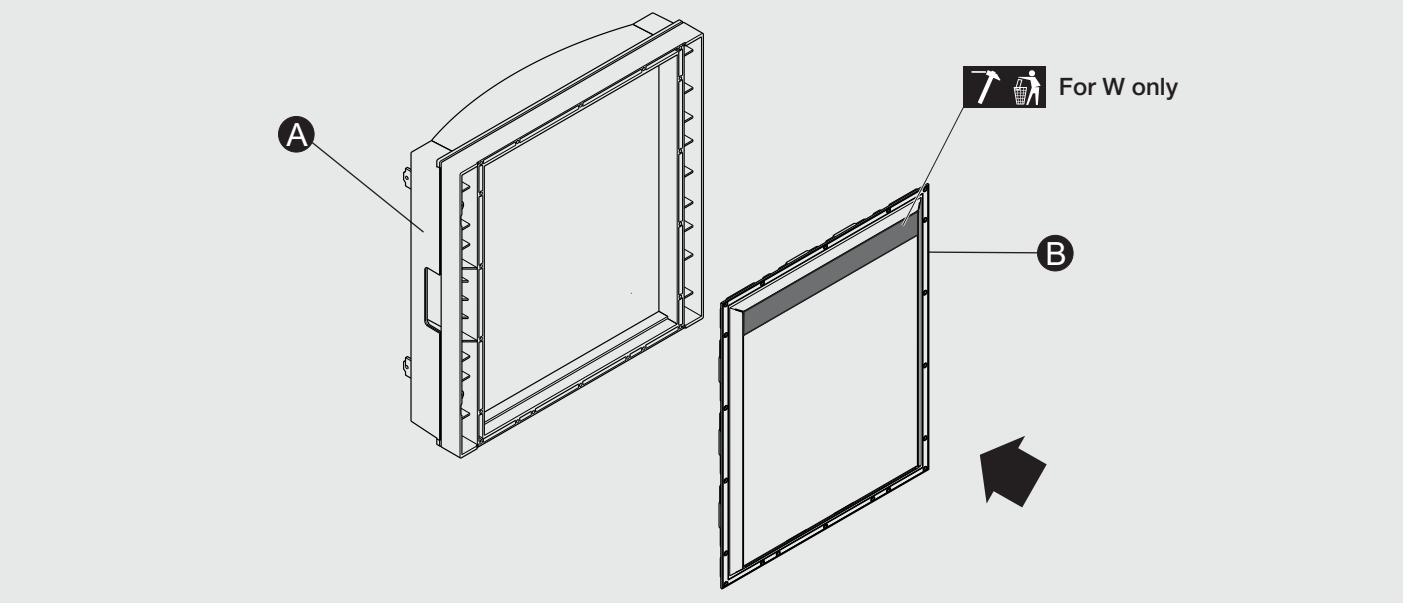

2

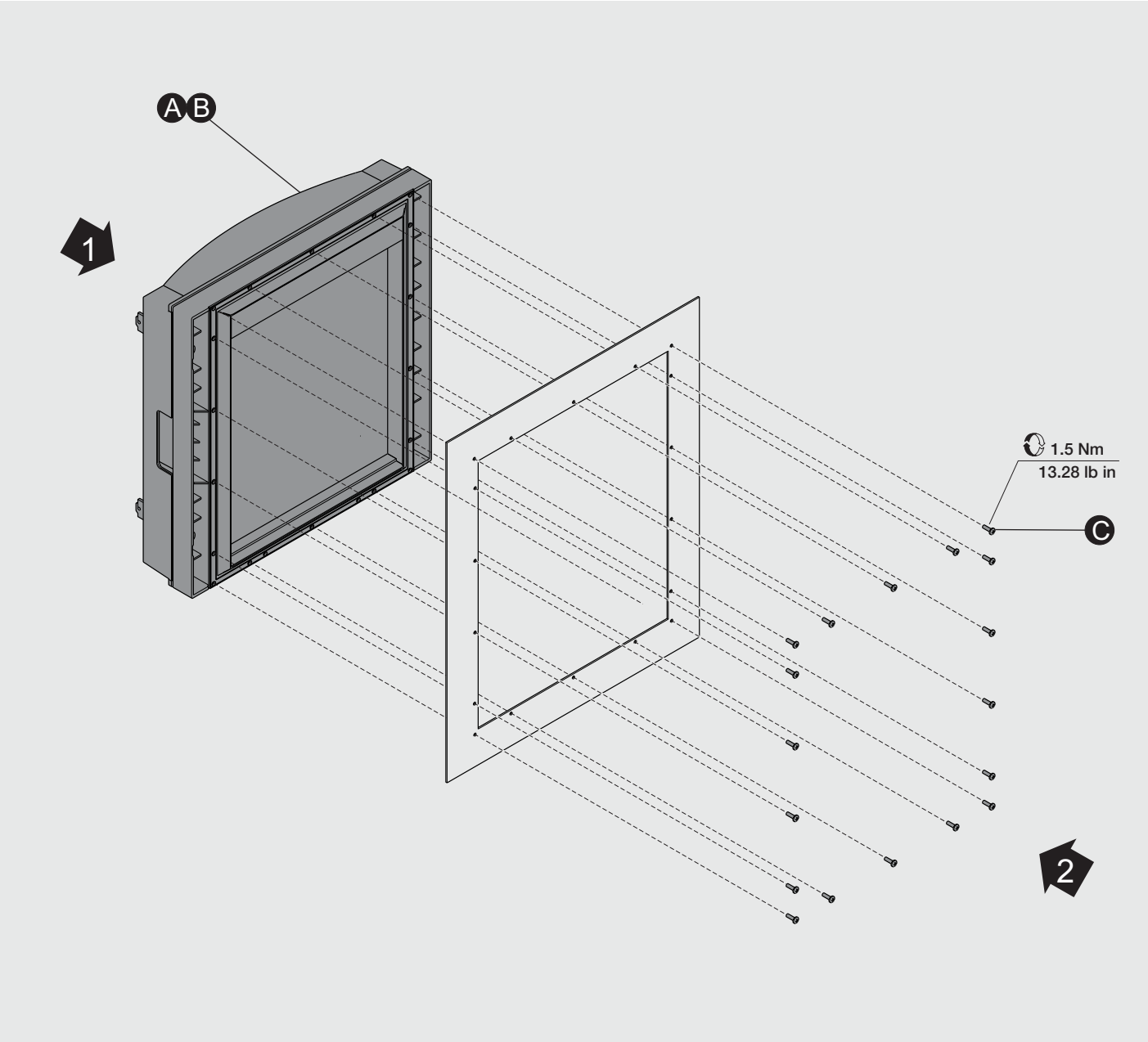

In esecuzione fissa verificare che la guarnizione sia montata sempre rivolta verso l'alto
With fixed version check that the gasket is always positioned upwards
Mit feste Ausführung Sicherstellen dass die Dichtung immer angeordnet hochzieht ist
Avec version fixe vérifier qui le joint soit toujours placé vers le haut
Con ejecución fija verificar que la junta esté siempre colocada hacia arriba

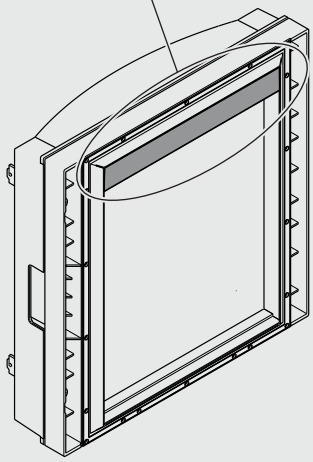

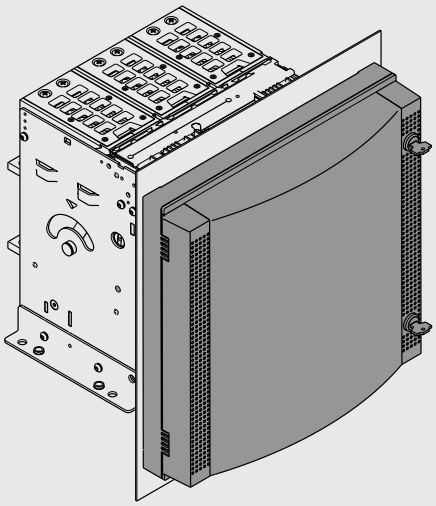

F

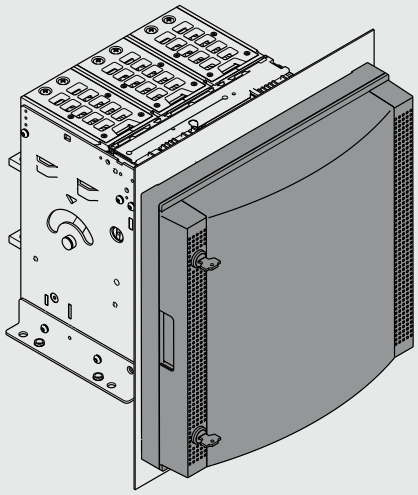

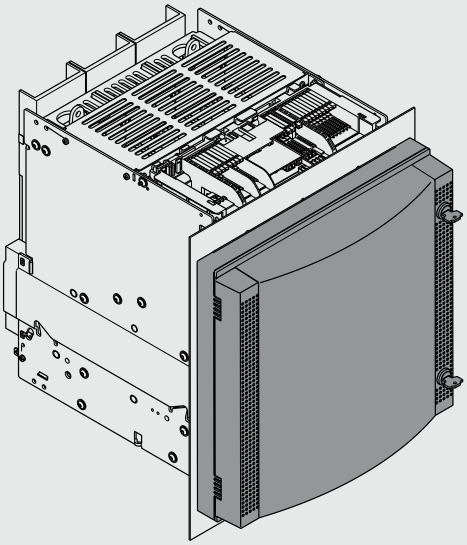

W

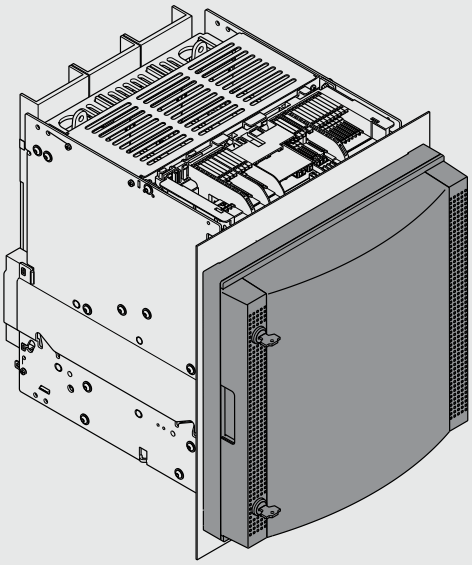

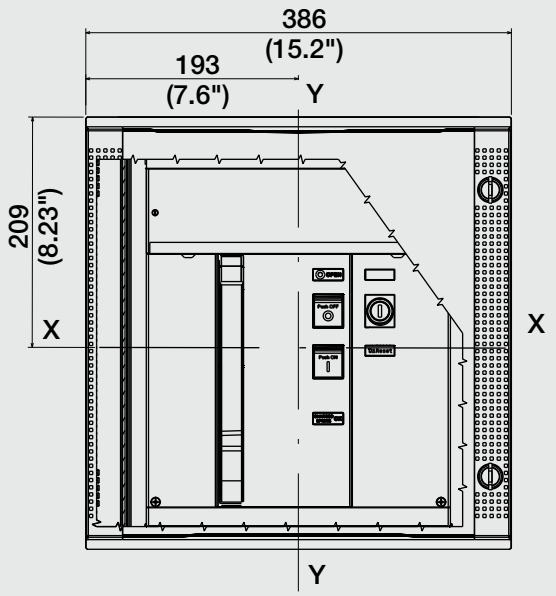
386
(15.2")
193
(7.6")
Y
209
(8.23")
X
X
Y

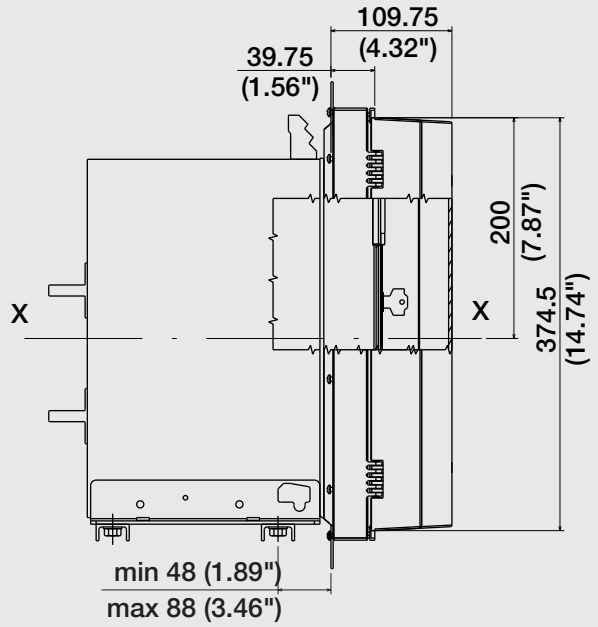
109.75
(4.32")
39.75
(1.56")
200
(7.87")
374.5
(14.74")
X
X
min 48 (1.89")
max 88 (3.46")

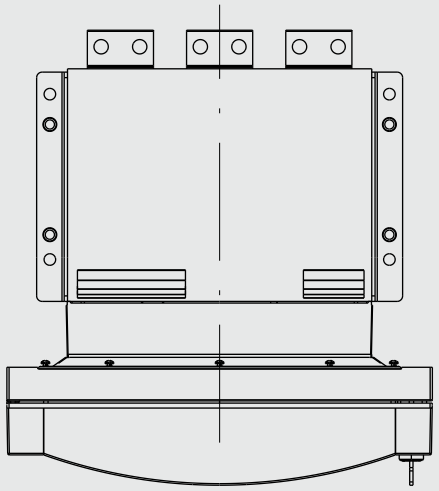

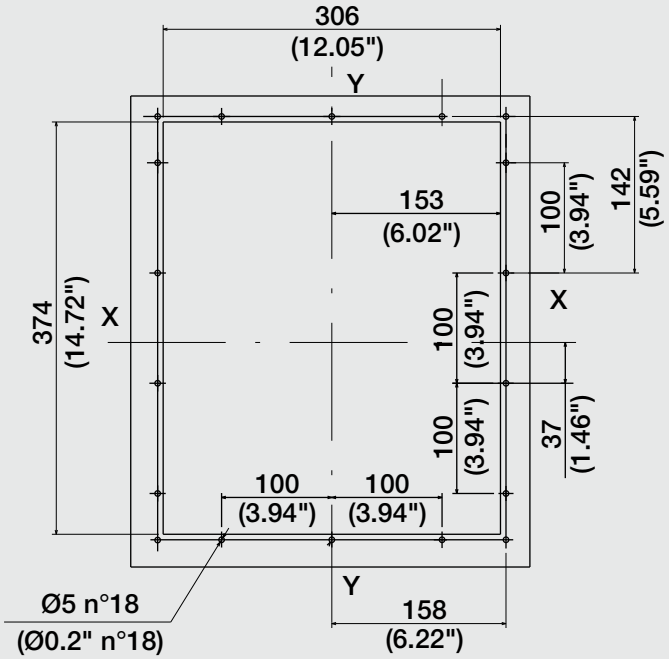
306
(12.05")
Y
153
(6.02")
100
(3.94")
142
(5.59")
374
(14.72")
X
X
100
(3.94")
100
(3.94")
37
(1.46")
100
(3.94")
100
(3.94")
Y
Ø5 n°18
(Ø0.2" n°18)
158
(6.22")

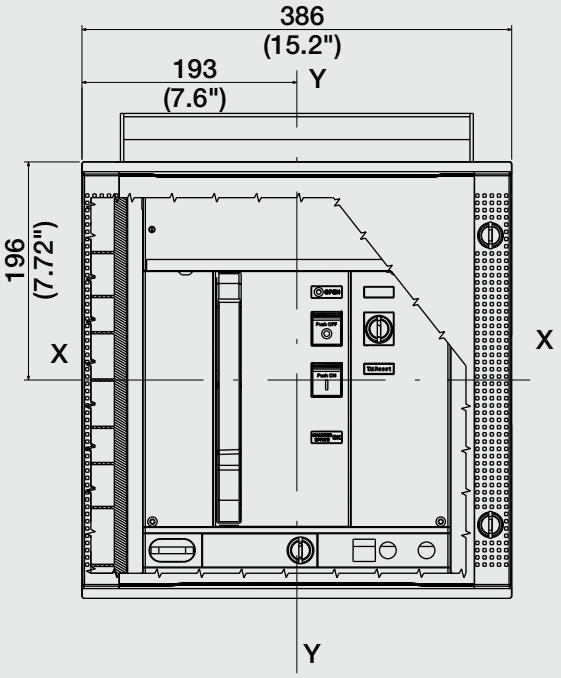
386
(15.2")
193
(7.6")
Y
196
(7.72")
X
X
Y

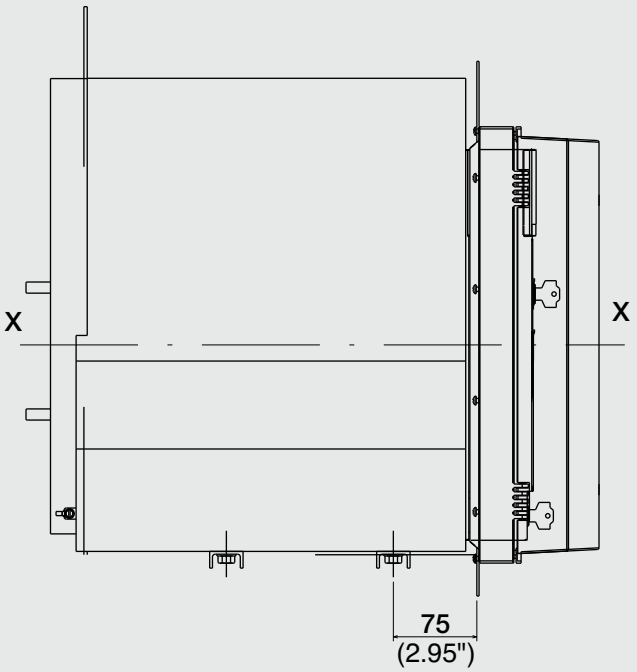
X
X
75
(2.95")

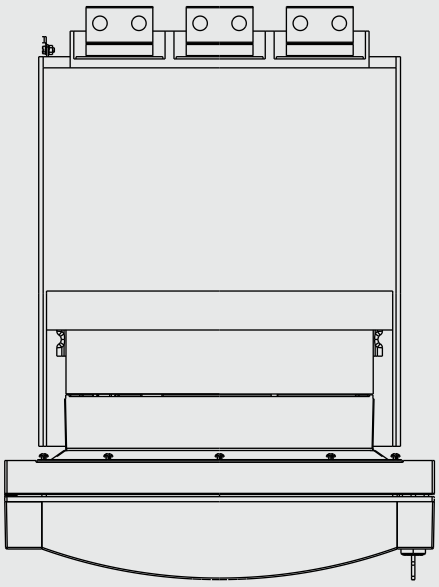

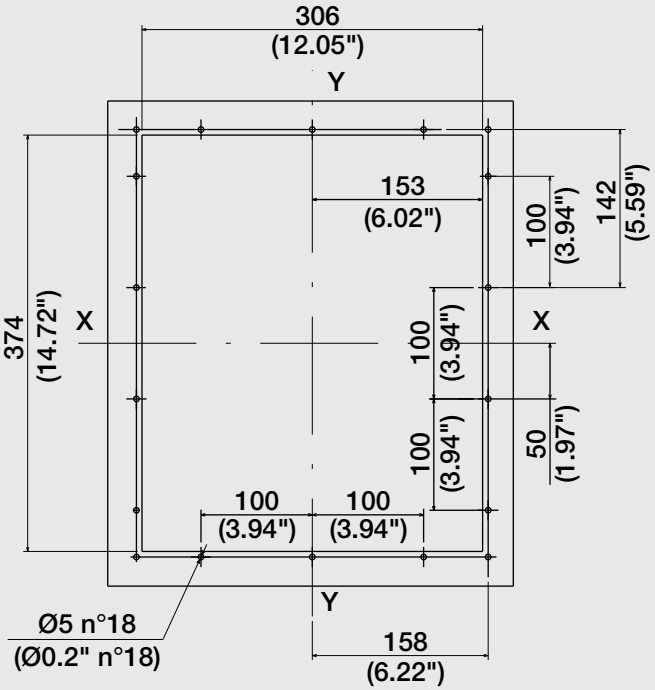
306
(12.05")
Y
153
(6.02")
100
(3.94")
142
(5.59")
374
(14.72")
X
X
100
(3.94")
100
(3.94")
50
(1.97")
100
(3.94")
100
(3.94")
Y
Ø5 n°18
(Ø0.2" n°18)
158
(6.22")

For more information please contact:

ABB S.p.A.
ABB SACE Division
Via Baioni, 35
24123 Bergamo - Italy
Phone: +39 035 395 111
Fax: +39 035 395 306 - 433

© Copyright 2013 ABB. All rights reserved.
www.abb.com

Power and productivity
for a better world™