We reserve all rights in this document and in the information contained therein. Reproduction, use or disclosure to third parties without express authority is strictly forbidden. Copr. ABB AB

Table of contents

Part of product	Sheet
Designation for 3U, 1/1x19" casing with 1 TRM slot	2
Communication module (COM05)	3
Power supply module 24–30 VDC (PSM01)	4
Power supply module 48–125 VDC (PSM02)	5
Power supply module 110–250 VDC, 100–240 VAC (PSM03)	6
Transformer module (TRM01)	7
Binary input/output module (BIO01)	8
Binary input/output module (BIO01)	9
Binary input/output module (BIO01)	10
Binary input/output module (BIO01)	11

We reserve all rights in this document and in the information contained therein. Reproduction, use or disclosure to third parties without express authority is strictly forbidden. Copr. ABB AB

1/1x19"

Rear view slot

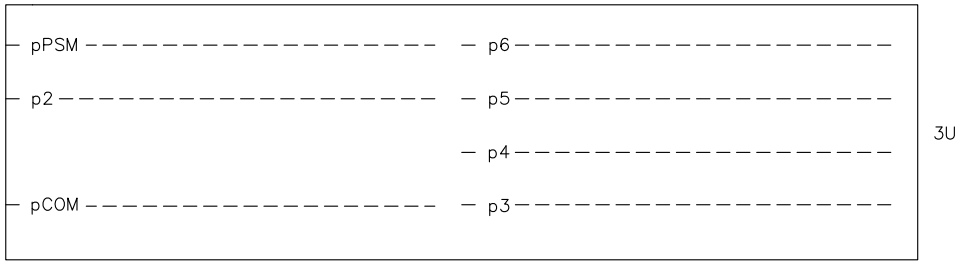

p= Position

Rear view terminal

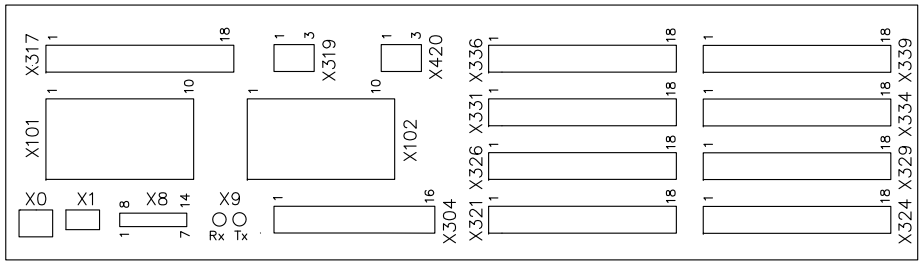

Designation for 3U, 1/1x19" casing with 1 TRM

Module	Slot	Terminal
COM05	pCOM	X0, X1, X8, X9, X304
TRM01	p2	X101, X102
PSM01 PSM02 PSM03	pPSM	X317. X319, X420
BIO01	p3	X321, X324
BIO01	p4	X326, X329
BIO01	p5	X331, X334
BIO01	p6	X336, X339

Compression or ringlug terminals

Based on	Prepared 2013-01-23	Agneta Rydh	Title Connection Diagram REC650 (BCAB) A07 IEC symbols
	Approved 2013-01-29	Patrik Nyback	
	Project		
Rev / Rev. Note / Date / Name			ABB AB

Doc.des.	Doc.kind	Ref.des.	
Resp.dept.	PSTP/TPLA	Rev.ind.	Lang. en
Doc.No. 1MRK006501-BD			Sheet 2
			Cont. 3

We reserve all rights in this document and in the information contained therein. Reproduction, use or disclosure to third parties without express authority is strictly forbidden. Copr. ABB AB

Communication module COM05

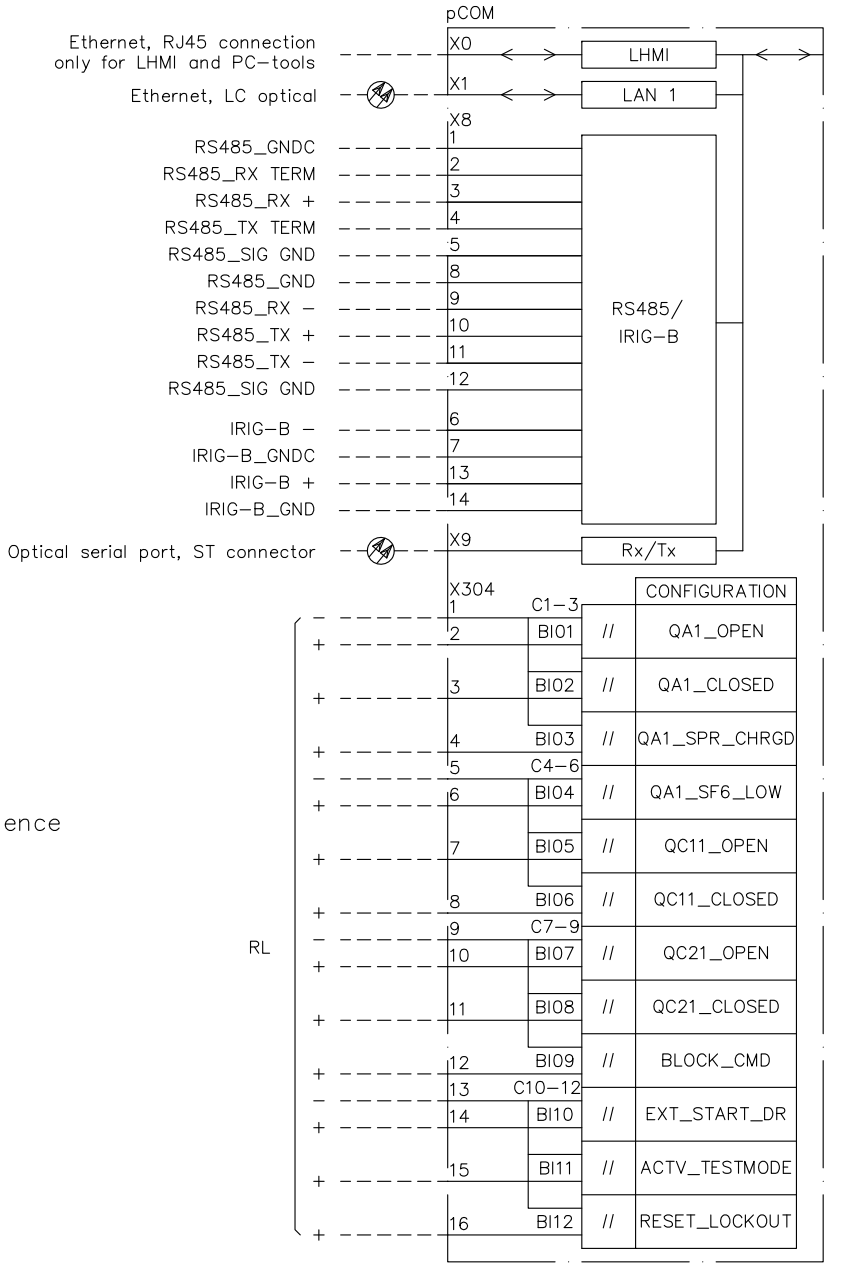

Observe polarity sequence of RL connectors

Based on	Prepared 2013-01-23	Agneta Rydh	Title Connection Diagram REC650 (BCAB) A07 IEC symbols
	Approved 2013-01-29	Patrik Nyback	
	Project		

Rev	Rev. Note	Date	Name

Doc.des.	Doc.kind	Ref.des.	
Resp.dept.	PSTP/TPLA	Rev.ind.	Lang. en
ABB AB	Doc.No. 1MRK006501-BD		Sheet 3
			Cont. 4

We reserve all rights in this document and in the information contained therein. Reproduction, use or disclosure to third parties without express authority is strictly forbidden. Copr. ABB AB

Power supply module PSM01 24–30 VDC

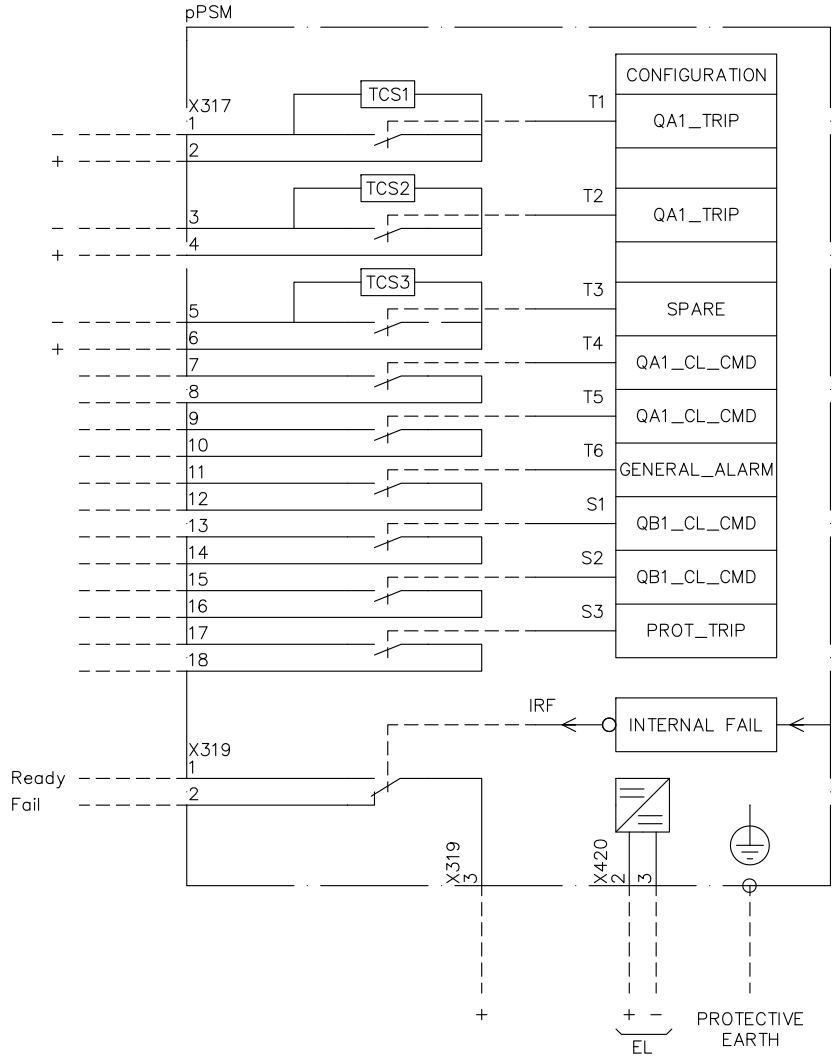

Observe polarity sequence

Based on	Prepared 2013-01-23	Agneta Rydh	Title Connection Diagram REC650 (BCAB) A07 IEC symbols
	Approved 2013-01-29	Patrik Nyback	
	Project		

Rev	Rev. Note	Date	Name

ABB AB

Doc.des.	Ref.des.
Doc.kind	
Resp.dept. PSTP/TPLA	Rev.ind.
Lang. en	
Sheet 4	
Cont. 5	
Doc.No. 1MRK006501-BD	

We reserve all rights in this document and in the information contained therein. Reproduction, use or disclosure to third parties without express authority is strictly forbidden. Copr. ABB AB

Power supply module PSM02 48–125 VDC

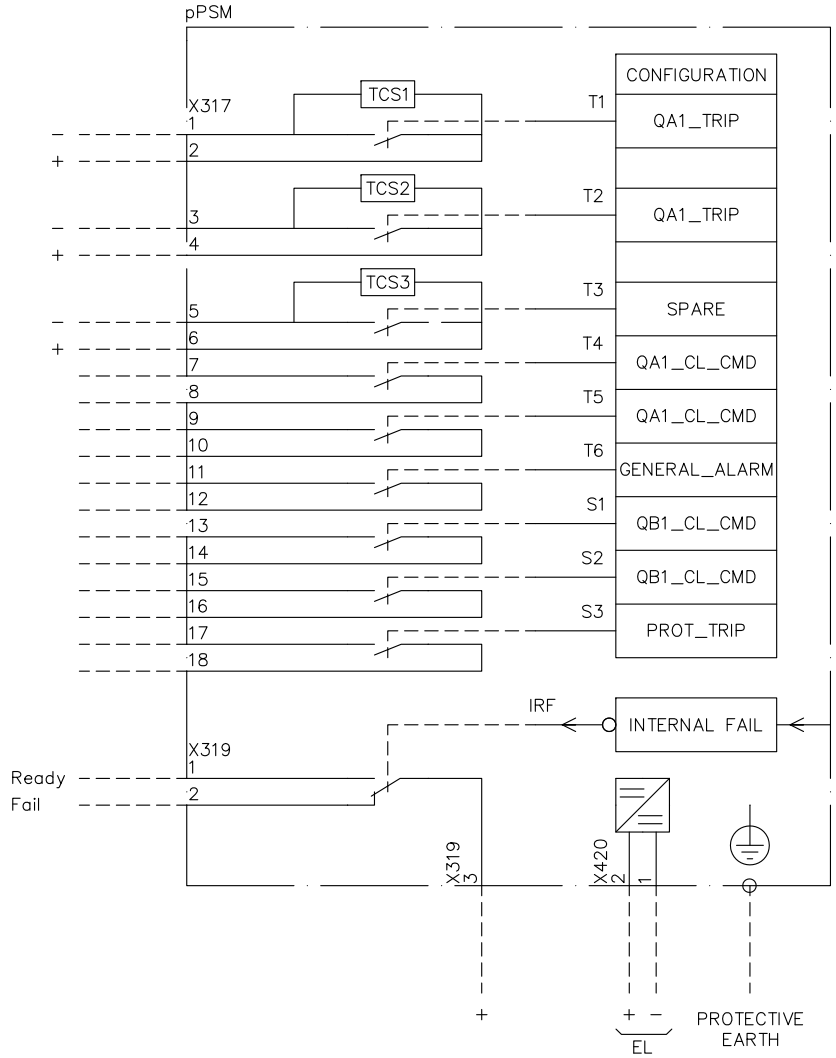

Observe polarity sequence

Based on	Prepared 2013-01-23	Agneta Rydh	Title Connection Diagram REC650 (BCAB) A07 IEC symbols
	Approved 2013-01-29	Patrik Nyback	
	Project		

Rev	Rev. Note	Date	Name

ABB AB

Doc.des.	Ref.des.
Doc.kind	
Resp.dept. PSTP/TPLA	Rev.ind.
Lang. en	
Doc.No. 1MRK006501-BD	Sheet 5
	Cont. 6

We reserve all rights in this document and in the information contained therein. Reproduction, use or disclosure to third parties without express authority is strictly forbidden. Copr. ABB AB

Power supply module PSM03 110–250 VDC, 100–240 VAC

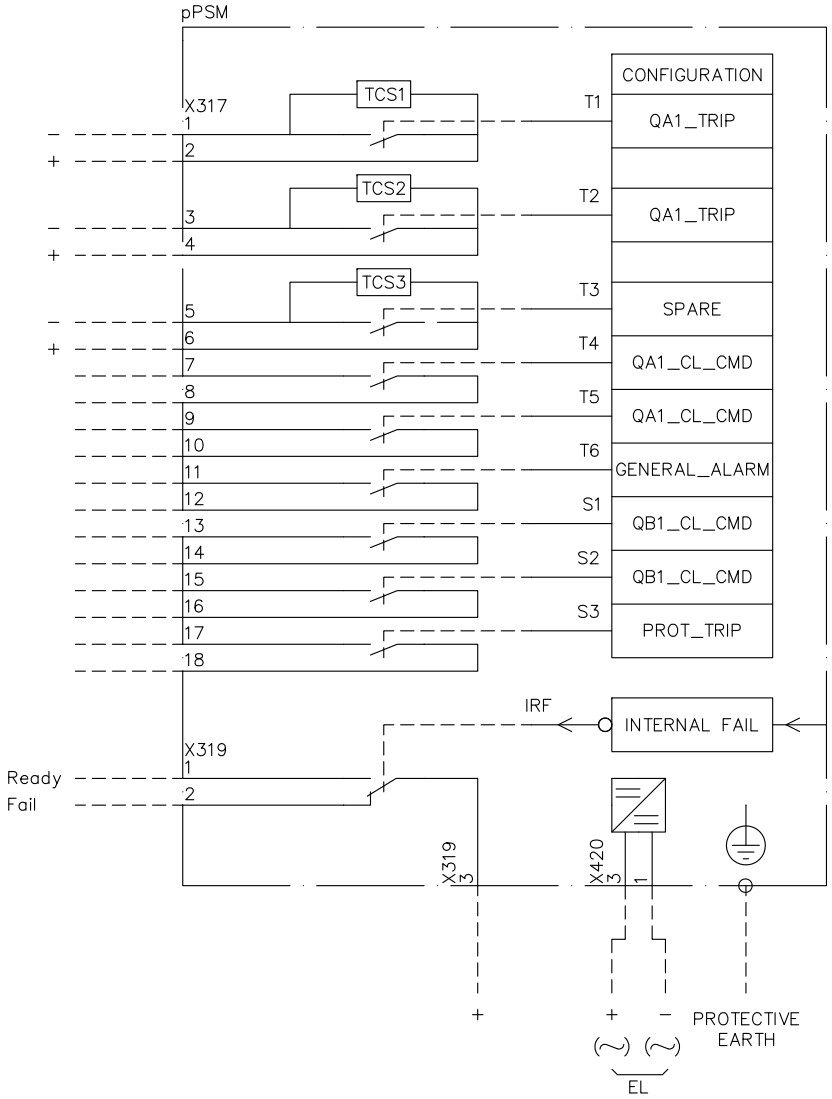

Observe polarity sequence

Based on	Prepared 2013-01-23	Agneta Rydh	Title Connection Diagram REC650 (BCAB) A07 IEC symbols
	Approved 2013-01-29	Patrik Nyback	
	Project		

Rev	Rev. Note	Date	Name

ABB AB

Doc.des.	Doc.kind	Ref.des.	
Resp.dept.	PSTP/TPLA	Rev.ind.	Lang. en
Doc.No. 1MRK006501-BD			Sheet 6
			Cont. 7

We reserve all rights in this document and in the information contained therein. Reproduction, use or disclosure to third parties without express authority is strictly forbidden. Copr. ABB AB

Transformer module TRM01

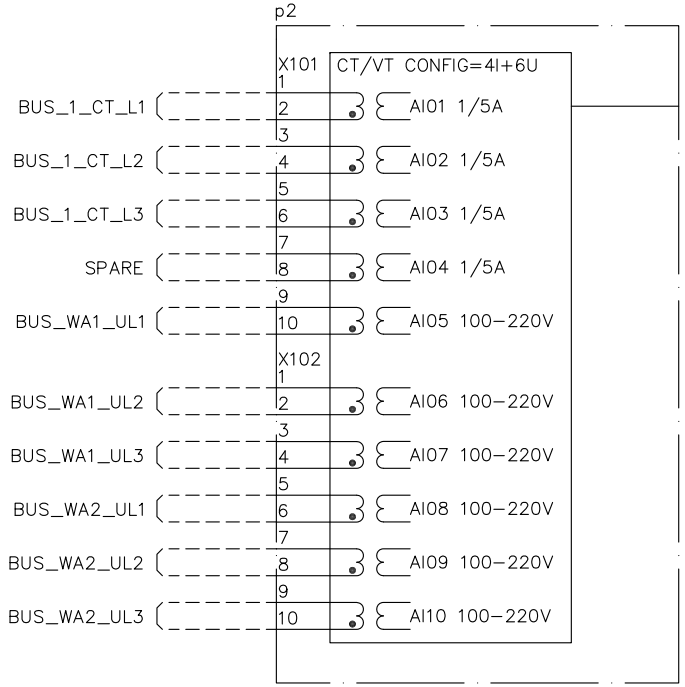

- Indicates high polarity. Note that internal polarity can be adjusted by setting of analog input CT neutral direction and or on SMAI pre-processing function blocks.

Based on	Prepared 2013-01-23	Agneta Rydh	Title Connection Diagram REC650 (BCAB) A07 IEC symbols	Doc.des.	Doc.kind	Ref.des.	
	Approved 2013-01-29	Patrik Nyback		Resp.dept.	PSTP/TPLA	Rev.ind.	Lang. en
	Project		ABB AB	Doc.No. 1MRK006501-BD			Sheet 7
Rev / Rev. Note / Date / Name							Cont. 8

We reserve all rights in this document and in the information contained therein. Reproduction, use or disclosure to third parties without express authority is strictly forbidden. Copr. ABB AB

Binary input/output module BIO01

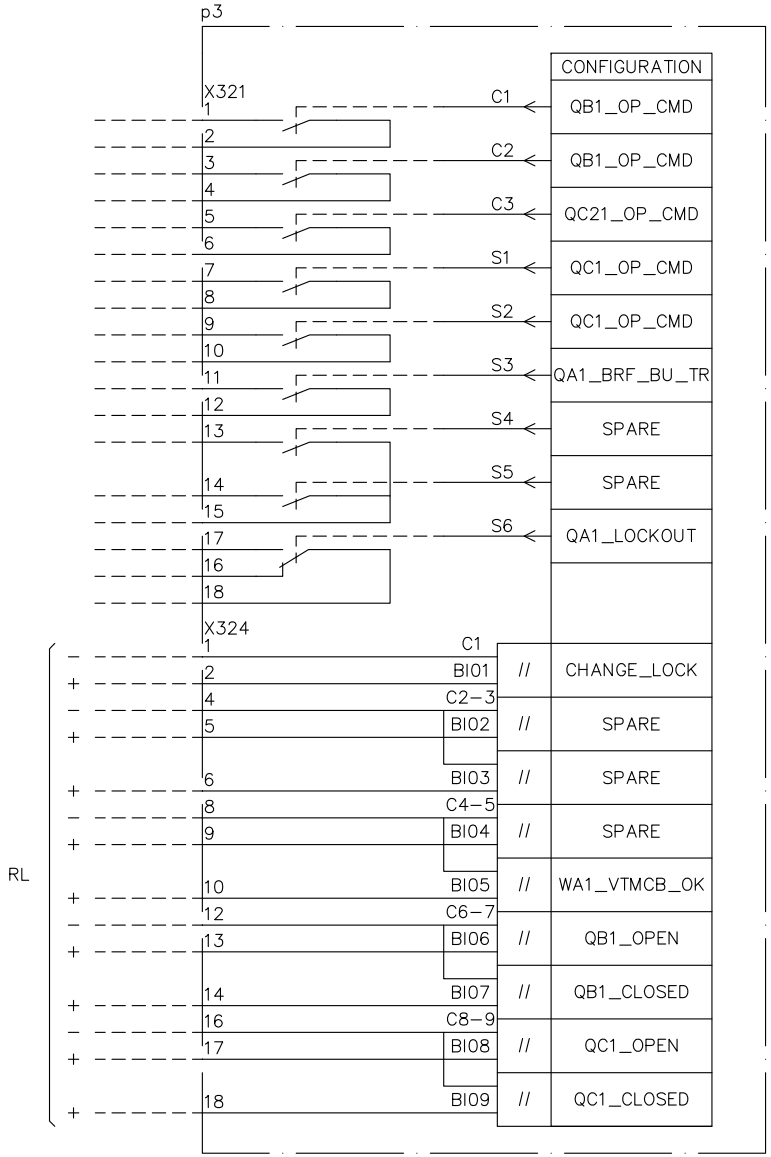

Observe polarity sequence of RL connectors

Based on	Prepared 2013-01-23	Agneta Rydh	Title Connection Diagram REC650 (BCAB) A07 IEC symbols
	Approved 2013-01-29	Patrik Nyback	
	Project		

Rev	Rev. Note	Date	Name

ABB AB

Doc.des.	Doc.kind	Ref.des.	
Resp.dept.	PSTP/TPLA	Rev.ind.	Lang. en
Doc.No. 1MRK006501-BD			Sheet 8
			Cont. 9

We reserve all rights in this document and in the information contained therein. Reproduction, use or disclosure to third parties without express authority is strictly forbidden. Copr. ABB AB

Binary input/output module BIO01

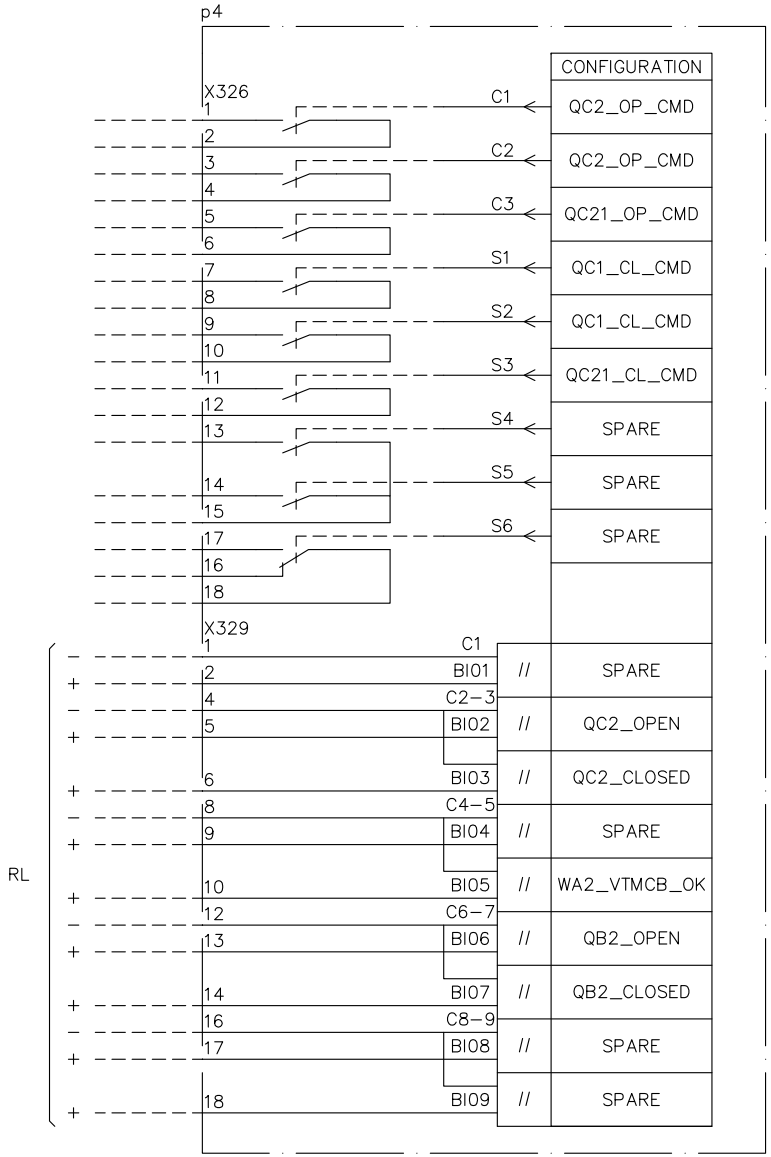

Observe polarity sequence of RL connectors

Based on	Prepared 2013-01-23	Agneta Rydh	Title Connection Diagram REC650 (BCAB) A07 IEC symbols
	Approved 2013-01-29	Patrik Nyback	
	Project		

Rev	Rev. Note	Date	Name

Doc.des.	Doc.kind	Ref.des.	
Resp.dept.	PSTP/TPLA	Rev.ind.	Lang. en
ABB AB	Doc.No. 1MRK006501-BD		Sheet 9
			Cont. 10

We reserve all rights in this document and in the information contained therein. Reproduction, use or disclosure to third parties without express authority is strictly forbidden. Copr. ABB AB

Binary input/output module BIO01

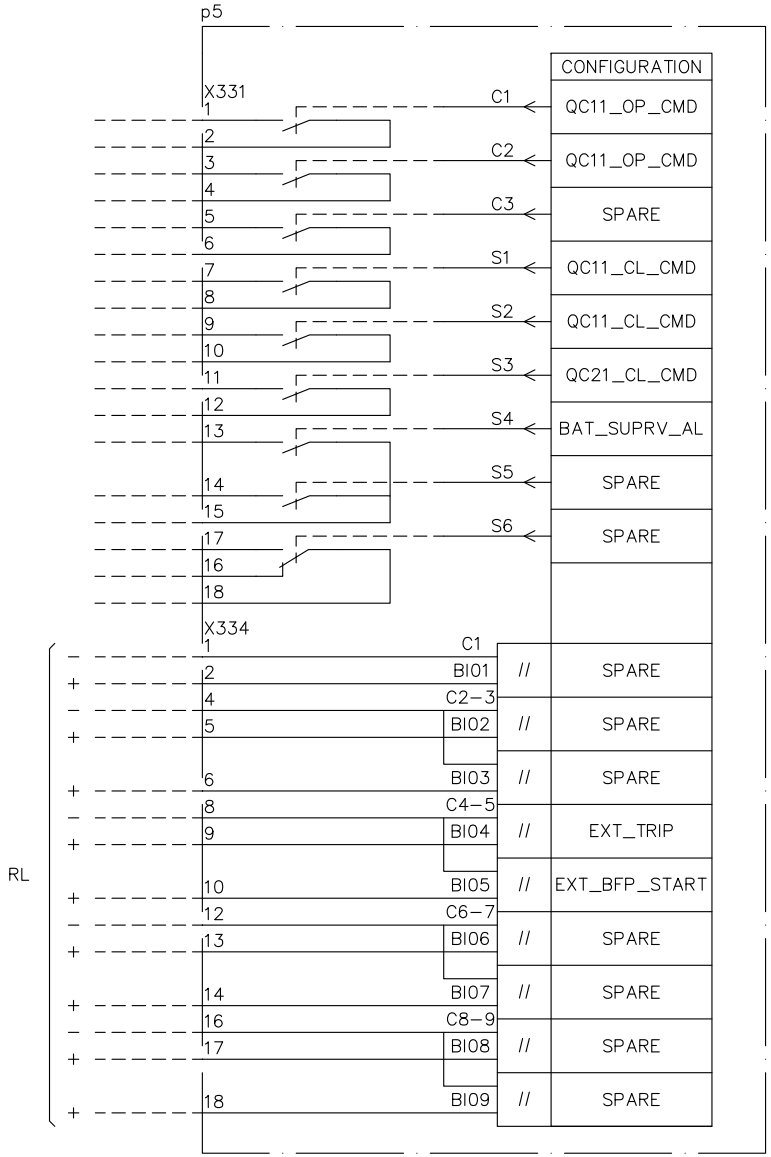

Observe polarity sequence of RL connectors

Based on	Prepared 2013-01-23	Agneta Rydh	Title Connection Diagram REC650 (BCAB) A07 IEC symbols
	Approved 2013-01-29	Patrik Nyback	
	Project		

Rev	Rev. Note	Date	Name

ABB AB

Doc.des.	Doc.kind	Ref.des.	
Resp.dept.	PSTP/TPLA	Rev.ind.	Lang. en
Doc.No. 1MRK006501-BD			Sheet 10
			Cont. 11

We reserve all rights in this document and in the information contained therein. Reproduction, use or disclosure to third parties without express authority is strictly forbidden. Copr. ABB AB

Binary input/output module BIO01

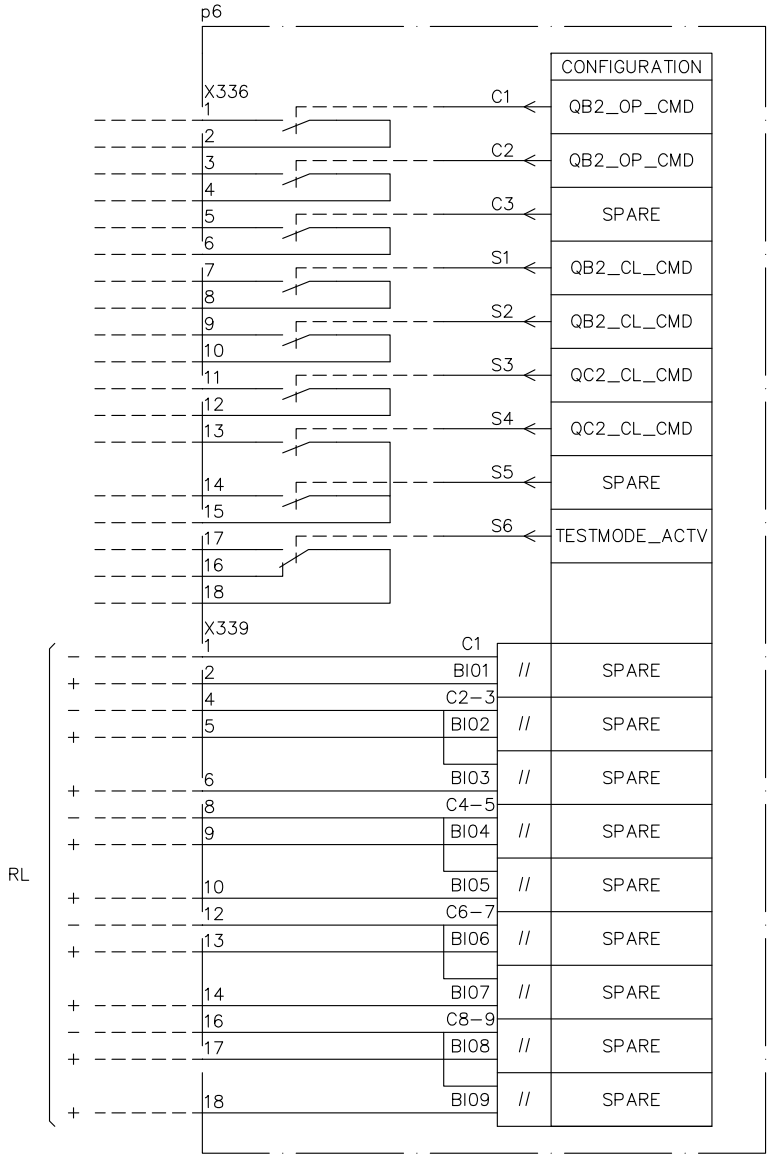

Observe polarity sequence of RL connectors

Based on	Prepared 2013-01-23	Agneta Rydh	Title Connection Diagram REC650 (BCAB) A07 IEC symbols
	Approved 2013-01-29	Patrik Nyback	
	Project		

Rev	Rev. Note	Date	Name

ABB AB

Doc.des.	Doc.kind	Ref.des.	
Resp.dept.	PSTP/TPLA	Rev.ind.	Lang. en
Doc.No. 1MRK006501-BD			Sheet 11
			Cont. –