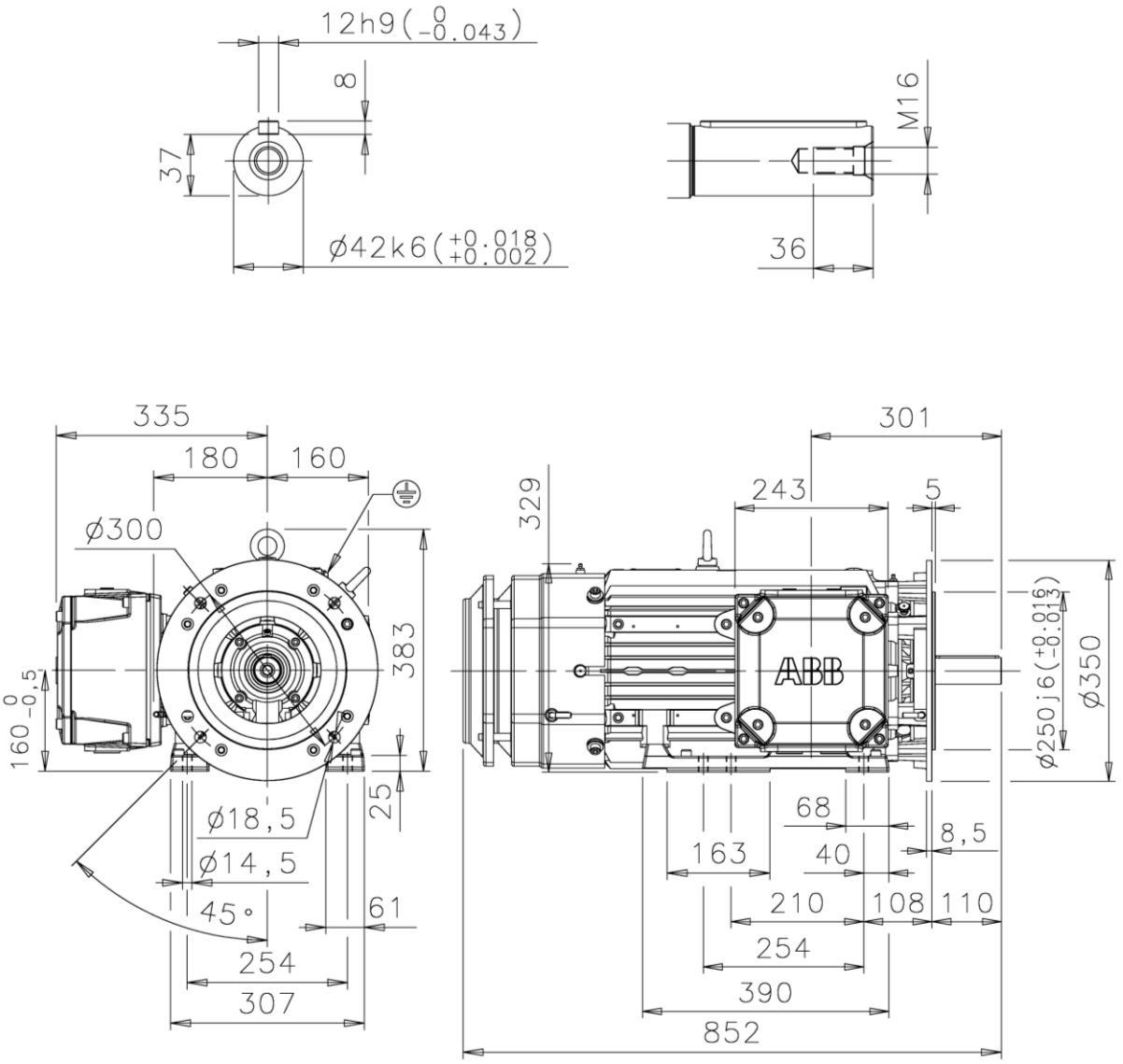

Additional information:

Dimension Print	Motor Type: M3JP(H) 160ML_2-12 V15	Document No: 3GZF500216-90 B 13 JP 160 A
Description: SQUIRREL CAGE MOTOR WITH TERMINAL BOX LHS		

Unit:	Motors and Generators	Issued by:	E.Kuntola	Replaces:
Date:	29.12.2011	Approved by:	J-P.Alanen	Replaced by:

ABB Oy	Customer Reference:	ABB