Relion® 670 series

Phasor measurement unit RES670 ANSI
Application manual

Power and productivity
for a better world™

ABB

Document ID: 1MRK511253-UUS
Issued: February 2015
Revision: B
Product version: 1.2

© Copyright 2012 ABB. All rights reserved

Copyright

This document and parts thereof must not be reproduced or copied without written permission from ABB, and the contents thereof must not be imparted to a third party, nor used for any unauthorized purpose.

The software and hardware described in this document is furnished under a license and may be used or disclosed only in accordance with the terms of such license.

Trademarks

ABB and Relion are registered trademarks of the ABB Group. All other brand or product names mentioned in this document may be trademarks or registered trademarks of their respective holders.

Warranty

Please inquire about the terms of warranty from your nearest ABB representative.

ABB Inc.

1021 Main Campus Drive

Raleigh, NC 27606, USA

Toll Free: 1-800-HELP-365, menu option #8

ABB Inc.

3450 Harvester Road

Burlington, ON L7N 3W5, Canada

Toll Free: 1-800-HELP-365, menu option #8

ABB Mexico S.A. de C.V.

Paseo de las Americas No. 31 Lomas Verdes 3a secc.

53125, Naucalpan, Estado De Mexico, MEXICO

Phone: (+1) 440-585-7804, menu option #8

Disclaimer

The data, examples and diagrams in this manual are included solely for the concept or product description and are not to be deemed as a statement of guaranteed properties. All persons responsible for applying the equipment addressed in this manual must satisfy themselves that each intended application is suitable and acceptable, including that any applicable safety or other operational requirements are complied with. In particular, any risks in applications where a system failure and/or product failure would create a risk for harm to property or persons (including but not limited to personal injuries or death) shall be the sole responsibility of the person or entity applying the equipment, and those so responsible are hereby requested to ensure that all measures are taken to exclude or mitigate such risks.

This document has been carefully checked by ABB but deviations cannot be completely ruled out. In case any errors are detected, the reader is kindly requested to notify the manufacturer. Other than under explicit contractual commitments, in no event shall ABB be responsible or liable for any loss or damage resulting from the use of this manual or the application of the equipment.

Conformity

This product complies with the directive of the Council of the European Communities on the approximation of the laws of the Member States relating to electromagnetic compatibility (EMC Directive 2004/108/EC) and concerning electrical equipment for use within specified voltage limits (Low-voltage directive 2006/95/EC). This conformity is the result of tests conducted by ABB in accordance with the product standards EN 50263 and EN 60255-26 for the EMC directive, and with the product standards EN 60255-1 and EN 60255-27 for the low voltage directive. The product is designed in accordance with the international standards of the IEC 60255 series and ANSI C37.90.

Table of contents

Section 1 Introduction....9
Introduction to the application manual....9
About the complete set of manuals for an IED....9
About the application manual....10
Intended audience....11
Revision notes....11

Section 2 Requirements....13
Current transformer requirements....13
Current transformer classification....13
Conditions....14
Fault current....15
Secondary wire resistance and additional load....15
General current transformer requirements....16
Rated equivalent secondary e.m.f. requirements....16
Current transformer requirements for CTs according to other standards....16
Current transformers according to IEC 60044-1, class P, PR....17
Current transformers according to IEC 60044-1, class PX, IEC 60044-6, class TPS (and old British Standard, class X)....17
Current transformers according to ANSI/IEEE....17
Voltage transformer requirements....18
SNTP server requirements....19

Section 3 IED application....21
General IED application....21
Analog inputs....22
Introduction....22
Setting guidelines....23
Setting of the phase reference channel....23
Setting parameters....52
Local human-machine interface....58
Human machine interface....58
Local HMI related functions....59
Introduction....59
General setting parameters....60

Table of contents

Indication LEDs....60
Introduction....60
Setting parameters....61
Basic IED functions....63
Self supervision with internal event list....63
Application....63
Setting parameters....63
Time synchronization....64
Application....64
Setting guidelines....64
Setting parameters....66
Parameter setting groups....69
Application....69
Setting guidelines....69
Setting parameters....69
Test mode functionality TEST....70
Setting parameters....70
Change lock CHNGLCK....70
Application....70
Setting parameters....71
IED identifiers....71
Application....71
Setting parameters....72
Product information....72
Application....72
Setting parameters....72
Rated system frequency PRIMVAL....73
Application....73
Setting guidelines....73
Setting parameters....73
Signal matrix for binary inputs SMBI....73
Application....74
Setting guidelines....74
Setting parameters....74
Signal matrix for binary outputs SMBO 74
Application....74
Setting guidelines....74
Setting parameters....75
Signal matrix for mA inputs SMMI....75
Application....75

Setting guidelines....75
Setting parameters....75
Signal matrix for analog inputs SMAI....75
Application....75
Frequency values....75
Setting guidelines....76
Setting parameters....81
Summation block 3 phase 3PHSUM....82
Application....82
Setting guidelines....82
Setting parameters....83
Authority status ATHSTAT....83
Application....83
Setting parameters....84
Denial of service DOS....84
Application....84
Setting guidelines....84
Wide area measurement system....84
C37.118 Phasor Measurement Data Streaming Protocol Configuration PMUCONF....84
Application....85
Setting guidelines....85
Setting parameters....86
Protocol reporting via IEEE 1344 and C37.118 PMUREPORT....87
Application....87
Setting guidelines....87
Setting parameters....88
Current protection....89
Four step phase overcurrent protection OC4PTOC (51/67)....89
Application....89
Setting guidelines....91
Setting parameters....96
Four step residual overcurrent protection, zero, negative sequence direction EF4PTOC (51N/67N)....101
Setting guidelines....101
Setting parameters....108
Four step directional negative phase sequence overcurrent protection NS4PTOC (46I2)....113
Application....113
Setting guidelines....115

Table of contents

Setting parameters....119
Sensitive directional residual overcurrent and power protection SDEPSDE (67N)....124
Application....124
Setting guidelines....126
Setting parameters....136
Thermal overload protection, one time constant LPTTR....138
Application....138
Setting guideline....139
Setting parameters....140
Voltage protection....140
Two step undervoltage protection UV2PTUV (27)....140
Application....141
Setting guidelines....141
Setting parameters....144
Two step overvoltage protection OV2PTOV (59)....147
Application....147
Setting guidelines....148
Setting parameters....151
Frequency protection....153
Underfrequency protection SAPTUF (81)....153
Application....153
Setting guidelines....153
Setting parameters....155
Overfrequency protection SAPTOF (81)....155
Application....156
Setting guidelines....156
Setting parameters....157
Rate-of-change frequency protection SAPFRC (81)....157
Application....158
Setting guidelines....158
Setting parameters....159
Multipurpose protection....159
General current and voltage protection CVGAPC....159
Application....160
Setting guidelines....166
Setting parameters....176
Secondary system supervision....183
Current circuit supervision CCSRDIF (87)....183
Application....183

Setting guidelines....184
Setting parameters....184
Fuse failure supervision SDDRFUF....185
Application....185
Setting guidelines....186
Setting parameters....189
Control....190
Apparatus control APC....190
Application....190
Interaction between modules....193
Setting guidelines....195
Setting parameters....196
Logic rotating switch for function selection and LHMI presentation SLGGIO....196
Application....196
Setting guidelines....197
Setting parameters....197
Selector mini switch VSGGIO....197
Application....197
Setting guidelines....198
Setting parameters....198
IEC61850 generic communication I/O functions DPGGIO....199
Application....199
Setting guidelines....199
Single point generic control 8 signals SPC8GGIO....199
Application....199
Setting guidelines....200
Setting parameters....200
AutomationBits, command function for DNP3.0 AUTOBITS....201
Application....201
Setting guidelines....201
Setting parameters....201
Single command, 16 signals SINGLECMD....216
Application....216
Setting guidelines....219
Setting parameters....219
Logic....219
Tripping logic SMPPTRC (94)....219
Application....219
Setting guidelines....224

Table of contents

Setting parameters....225
Trip matrix logic TMAGGIO....225
Setting parameters....225
Configurable logic blocks....226
Application....226
Setting parameters....227
Fixed signal function block FXDSIGN....228
Application....228
Setting parameters....229
Boolean 16 to Integer conversion B16I....230
Application....230
Setting guidelines....230
Boolean 16 to Integer conversion with logic node representation B16IFCVI....230
Application....230
Setting guidelines....230
Integer to Boolean 16 conversion IB16....231
Application....231
Setting parameters....231
Integer to Boolean 16 conversion with logic node representation IB16FCVB....231
Application....231
Setting parameters....231
Monitoring....232
Measurement....232
Application....232
Zero clamping....234
Setting guidelines....235
Setting parameters....245
Event counter CNTGGIO....259
Identification....259
Setting parameters....259
Event function EVENT....259
Introduction....259
Setting guidelines....260
Setting parameters....261
Logical signal status report BINSTATREP....263
Application....263
Setting guidelines....264
Setting parameters....264

Measured value expander block RANGE_XP....264
Application....264
Setting guidelines....264
Disturbance report DRPRDRE....264
Application....265
Setting guidelines....266
Setting parameters....272
Sequential of events....282
Application....282
Setting guidelines....282
Indications....282
Application....282
Setting guidelines....283
Event recorder 283
Application....283
Setting guidelines....284
Trip value recorder....284
Application....284
Setting guidelines....285
Disturbance recorder....285
Application....285
Setting guidelines....286
Metering....286
Pulse-counter logic PCGGIO....286
Setting parameters....287
Function for energy calculation and demand handling ETPMMTR....287
Application....287
Setting guidelines....288
Setting parameters....289

Section 4 Station communication....291
IEC 61850-8-1 communication protocol....291
Application IEC 61850-8-1....291
Setting guidelines....293
Setting parameters....293
IEC 61850 generic communication I/O functions SPGGIO, SP16GGIO....294
Application....294
Setting guidelines....294

Setting parameters....294
IEC 61850 generic communication I/O functions MVGGIO....294
Application....294
Setting guidelines....294
Setting parameters....295
IEC 61850-8-1 redundant station bus communication....295
Application....295
Setting guidelines....297
Setting parameters....298
Multiple command and transmit MULTICMDRCV, MULTICMDSND....299
Application....299
Setting guidelines....299
Settings....299
Setting parameters....299

Section 5 Configuration....301
Description of configuration RES670....301
Introduction....301
Description of A20A configuration....301
Description of configuration B20A....306

Section 6 Glossary....313

Section 1 Introduction

About this chapter

This chapter introduces the user to the manual as such.

1.1 Introduction to the application manual

1.1.1 About the complete set of manuals for an IED

The user's manual (UM) is a complete set of five different manuals:

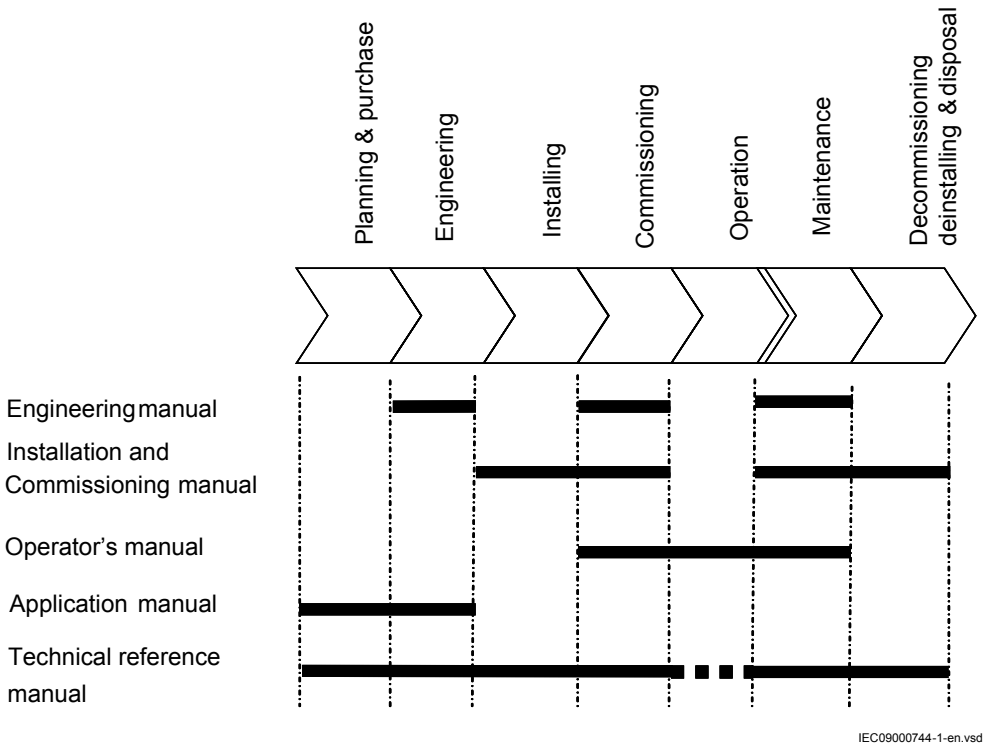

The Application Manual (AM) contains application descriptions, setting guidelines and setting parameters sorted per function. The application manual should be used to find out when and for what purpose a typical protection function could be used. The manual should also be used when calculating settings.

The Technical Reference Manual (TRM) contains application and functionality descriptions and it lists function blocks, logic diagrams, input and output signals, setting parameters and technical data sorted per function. The technical reference manual should be used as a technical reference during the engineering phase, installation and commissioning phase, and during normal service.

The Installation and Commissioning Manual (ICM) contains instructions on how to install and commission the protection IED. The manual can also be used as a reference during periodic testing. The manual covers procedures for mechanical and electrical installation, energizing and checking of external circuitry, setting and configuration as well as verifying settings and performing directional tests. The chapters are organized in the chronological order (indicated by chapter/section numbers) in which the protection IED should be installed and commissioned.

The Operator's Manual (OM) contains instructions on how to operate the protection IED during normal service once it has been commissioned. The operator's manual can be used to find out how to handle disturbances or how to view calculated and measured network data in order to determine the cause of a fault.

The Engineering Manual (EM) contains instructions on how to engineer the IEDs using the different tools in PCM600. The manual provides instructions on how to set up a PCM600 project and insert IEDs to the project structure. The manual also recommends a sequence for engineering of protection and control functions, LHMI functions as well as communication engineering for IEC 61850 and DNP3.

1.1.2 About the application manual

The application manual contains the following chapters:

- The chapter *"Requirements"* describes current and voltage transformer requirements.
- The chapter *"IED application"* describes the use of the included software functions in the IED. The chapter discusses application possibilities and gives guidelines for calculating settings for a particular application.
- The chapter *"Station communication"* describes the communication possibilities in a SA-system.
- The chapter *"Remote communication"* describes the remote end data communication possibilities through binary signal transferring.
- The chapter *"Configuration"* describes the preconfiguration of the IED and its complements.
- The chapter *"Glossary"* is a list of terms, acronyms and abbreviations used in ABB technical documentation.

1.1.3 Intended audience

General

The application manual is addressing the system engineer/technical responsible that is responsible for specifying the application of the IED.

Requirements

The system engineer/technical responsible must have a good knowledge about protection systems, protection equipment, protection functions and the configured functional logics in the protection.

Documents related to RES670	Identity number
Operator's manual	1MRK 511 251-UUS
Installation and commissioning manual	1MRK 511 252-UUS
Technical reference manual	1MRK 511 250-UUS
Application manual	1MRK 511 253-UUS
Product guide pre-configured	1MRK 511 266-BUS
Connection and Installation components	1MRK 513 003-BEN
Test system, COMBITEST	1MRK 512 001-BEN
Accessories for 670 series IEDs	1MRK 514 012-BEN
670 series SPA and signal list	1MRK 500 092-WUS
IEC 61850 Data objects list for 670 series	1MRK 500 091-WUS
Engineering manual 670 series	1MRK 511 240-UUS
Communication set-up for Relion 670 series	1MRK 505 260-UEN

More information can be found on www.abb.com/substationautomation.

1.1.4 Revision notes

Revision	Description
-	First issue for 670 series version 1.2.
A	Maintenance updates, PR corrections
B	Maintenance updates, PR corrections

Section 2 Requirements

About this chapter

This chapter describes current and voltage transformer requirements.

2.1 Current transformer requirements

The performance of a protection function will depend on the quality of the measured current signal. Saturation of the current transformer (CT) will cause distortion of the current signal and can result in a failure to operate or cause unwanted operations of some functions. Consequently CT saturation can have an influence on both the dependability and the security of the protection. This protection IED has been designed to permit heavy CT saturation with maintained correct operation.

2.1.1 Current transformer classification

To guarantee correct operation, the current transformers (CTs) must be able to correctly reproduce the current for a minimum time before the CT will begin to saturate. To fulfill the requirement on a specified time to saturation the CTs must fulfill the requirements of a minimum secondary e.m.f. that is specified below.

There are several different ways to specify CTs. Conventional magnetic core CTs are usually specified and manufactured according to some international or national standards, which specify different protection classes as well. There are many different standards and a lot of classes but fundamentally there are three different types of CTs:

- High remanence type CT
- Low remanence type CT
- Non remanence type CT

The high remanence type has no limit for the remanent flux. This CT has a magnetic core without any airgap and a remanent flux might remain almost infinite time. In this type of transformers the remanence can be up to around 80% of the saturation flux. Typical examples of high remanence type CT are class P, PX, TPS, TPX according to IEC, class P, X according to BS (old British Standard) and non gapped class C, K according to ANSI/IEEE.

The low remanence type has a specified limit for the remanent flux. This CT is made with a small air gap to reduce the remanence to a level that does not exceed 10% of the saturation flux. The small air gap has only very limited influences on the other properties of the CT. Class PR, TPY according to IEC are low remanence type CTs.

The non remanence type CT has practically negligible level of remanent flux. This type of CT has relatively big air gaps in order to reduce the remanence to practically zero level. In the same time, these air gaps reduce the influence of the DC-component from the primary fault current. The air gaps will also decrease the measuring accuracy in the non-saturated region of operation. Class TPZ according to IEC is a non remanence type CT.

Different standards and classes specify the saturation e.m.f. in different ways but it is possible to approximately compare values from different classes. The rated equivalent limiting secondary e.m.f. E_{al} according to the IEC 60044 – 6 standard is used to specify the CT requirements for the IED. The requirements are also specified according to other standards.

2.1.2 Conditions

The requirements are a result of investigations performed in our network simulator. The current transformer models are representative for current transformers of high remanence and low remanence type. The results may not always be valid for non remanence type CTs (TPZ).

The performances of the protection functions have been checked in the range from symmetrical to fully asymmetrical fault currents. Primary time constants of at least 120 ms have been considered at the tests. The current requirements below are thus applicable both for symmetrical and asymmetrical fault currents.

Depending on the protection function phase-to-ground, phase-to-phase and three-phase faults have been tested for different relevant fault positions for example, close in forward and reverse faults, zone 1 reach faults, internal and external faults. The dependability and security of the protection was verified by checking for example, time delays, unwanted operations, directionality, overreach and stability.

The remanence in the current transformer core can cause unwanted operations or minor additional time delays for some protection functions. As unwanted operations are not acceptable at all maximum remanence has been considered for fault cases critical for the security, for example, faults in reverse direction and external faults. Because of the almost negligible risk of additional time delays and the non-existent risk of failure to operate the remanence have not been considered for the dependability cases. The requirements below are therefore fully valid for all normal applications.

It is difficult to give general recommendations for additional margins for remanence to avoid the minor risk of an additional time delay. They depend on the performance and economy requirements. When current transformers of low remanence type (for example, TPY, PR) are used, normally no additional margin is needed. For current transformers of high remanence type (for example, P, PX, TPS, TPX) the small probability of fully asymmetrical faults, together with high remanence in the same direction as the flux generated by the fault, has to be kept in mind at the decision of an additional margin. Fully asymmetrical fault current will be achieved when the fault occurs at approximately zero voltage (0°). Investigations have shown that 95% of the faults in the network will occur when the voltage is between 40° and 90°. In addition fully asymmetrical fault current will not exist in all phases at the same time.

2.1.3 Fault current

The current transformer requirements are based on the maximum fault current for faults in different positions. Maximum fault current will occur for three-phase faults or single phase-to-ground faults. The current for a single phase-to-ground fault will exceed the current for a three-phase fault when the zero sequence impedance in the total fault loop is less than the positive sequence impedance.

When calculating the current transformer requirements, maximum fault current for the relevant fault position should be used and therefore both fault types have to be considered.

2.1.4 Secondary wire resistance and additional load

The voltage at the current transformer secondary terminals directly affects the current transformer saturation. This voltage is developed in a loop containing the secondary wires and the burden of all relays in the circuit. For ground faults the loop includes the phase and neutral wire, normally twice the resistance of the single secondary wire. For three-phase faults the neutral current is zero and it is just necessary to consider the resistance up to the point where the phase wires are connected to the common neutral wire. The most common practice is to use four wires secondary cables so it normally is sufficient to consider just a single secondary wire for the three-phase case.

The conclusion is that the loop resistance, twice the resistance of the single secondary wire, must be used in the calculation for phase-to-ground faults and the phase resistance, the resistance of a single secondary wire, may normally be used in the calculation for three-phase faults.

As the burden can be considerable different for three-phase faults and phase-to-ground faults it is important to consider both cases. Even in a case where the phase-to-ground fault current is smaller than the three-phase fault current the phase-to-ground fault can be dimensioning for the CT depending on the higher burden.

In isolated or high impedance grounded systems the phase-to-ground fault is not the dimensioning case and therefore the resistance of the single secondary wire always can be used in the calculation, for this case.

2.1.5 General current transformer requirements

The current transformer ratio is mainly selected based on power system data for example, maximum load. However, it should be verified that the current to the protection is higher than the minimum operating value for all faults that are to be detected with the selected CT ratio. The minimum operating current is different for different functions and normally settable so each function should be checked.

The current error of the current transformer can limit the possibility to use a very sensitive setting of a sensitive residual overcurrent protection. If a very sensitive setting of this function will be used it is recommended that the current transformer should have an accuracy class which have an current error at rated primary current that is less than ±1% (for example, 5P). If current transformers with less accuracy are used it is advisable to check the actual unwanted residual current during the commissioning.

2.1.6 Rated equivalent secondary e.m.f. requirements

With regard to saturation of the current transformer all current transformers of high remanence and low remanence type that fulfill the requirements on the rated equivalent secondary e.m.f. E_{al} below can be used. The characteristic of the non remanence type CT (TPZ) is not well defined as far as the phase angle error is concerned. If no explicit recommendation is given for a specific function we therefore recommend contacting ABB to confirm that the non remanence type can be used.

The CT requirements for the different functions below are specified as a rated equivalent limiting secondary e.m.f. E_{al} according to the IEC 60044-6 standard. Requirements for CTs specified in different ways are given at the end of this section.

2.1.7 Current transformer requirements for CTs according to other standards

All kinds of conventional magnetic core CTs are possible to use with the IEDs if they fulfill the requirements corresponding to the above specified expressed as the rated equivalent secondary e.m.f. E_{al} according to the IEC 60044-6 standard. From different standards and available data for relaying applications it is possible to approximately calculate a secondary e.m.f. of the CT comparable with E_{al}. By comparing this with the required secondary e.m.f. E_{alreq} it is possible to judge if the CT fulfills the requirements. The requirements according to some other standards are specified below.

2.1.7.1 Current transformers according to IEC 60044-1, class P, PR

A CT according to IEC 60044-1 is specified by the secondary limiting e.m.f. E_{2max}. The value of the E_{2max} is approximately equal to the corresponding E_{al} according to IEC 60044-6. Therefore, the CTs according to class P and PR must have a secondary limiting e.m.f. E_{2max} that fulfills the following:

$$E_{2\max} > \max E_{alreq}$$

(Equation 1)

2.1.7.2 Current transformers according to IEC 60044-1, class PX, IEC 60044-6, class TPS (and old British Standard, class X)

CTs according to these classes are specified approximately in the same way by a rated knee-point e.m.f. E_{knee} (E_k for class PX, E_{kneeBS} for class X and the limiting secondary voltage V_{al} for TPS). The value of the E_{knee} is lower than the corresponding E_{al} according to IEC 60044-6. It is not possible to give a general relation between the E_{knee} and the E_{al} but normally the E_{knee} is approximately 80 % of the E_{al}. Therefore, the CTs according to class PX, X and TPS must have a rated knee-point e.m.f. E_{knee} that fulfills the following:

$$S = TD \cdot S_{Old} + (1 - TD) \cdot S_{Calculated}$$

(Equation 2)

2.1.7.3 Current transformers according to ANSI/IEEE

Current transformers according to ANSI/IEEE are partly specified in different ways. A rated secondary terminal voltage V_{ANSI} is specified for a CT of class C. V_{ANSI} is the secondary terminal voltage the CT will deliver to a standard burden at 20 times rated secondary current without exceeding 10 % ratio correction. There are a number of standardized U_{ANSI} values for example, V_{ANSI} is 400 V for a C400 CT. A corresponding rated equivalent limiting secondary e.m.f. E_{alANSI} can be estimated as follows:

$$E_{alANSI} = \left|20 \cdot I_{SN} \cdot R_{CT} + V_{ANSI}\right| = \left|20 \cdot I_{SN} \cdot R_{CT} + 20 \cdot I_{SN} \cdot Z_{bANSI}\right|$$

(Equation 3)

where:

Z_{bANSI} The impedance (that is, complex quantity) of the standard ANSI burden for the specific C class (Ω)

V_{ANSI} The secondary terminal voltage for the specific C class (V)

The CTs according to class C must have a calculated rated equivalent limiting secondary e.m.f. E_{alANSI} that fulfills the following:

$$E_{alANSI} > \text{maximum of } E_{alreq}$$

(Equation 4)

A CT according to ANSI/IEEE is also specified by the knee-point voltage $V_{kneeANSI}$ that is graphically defined from an excitation curve. The knee-point voltage $V_{kneeANSI}$ normally has a lower value than the knee-point e.m.f. according to IEC and BS. $V_{kneeANSI}$ can approximately be estimated to 75 % of the corresponding E_{al} according to IEC 60044 6. Therefore, the CTs according to ANSI/IEEE must have a knee-point voltage $V_{kneeANSI}$ that fulfills the following:

$$E_{kneeANSI} > 0.75 \cdot (\text{maximum of } E_{alreq})$$

(Equation 5)

2.2 Voltage transformer requirements

The performance of a protection function will depend on the quality of the measured input signal. Transients caused by capacitive Coupled voltage transformers (CCVTs) can affect some protection functions.

Magnetic or capacitive voltage transformers can be used.

The capacitive voltage transformers (CCVTs) should fulfill the requirements according to the IEC 60044–5 standard regarding ferro-resonance and transients. The ferro-resonance requirements of the CCVTs are specified in chapter 7.4 of the standard.

The transient responses for three different standard transient response classes, T1, T2 and T3 are specified in chapter 15.5 of the standard. CCVTs according to all classes can be used.

The protection IED has effective filters for these transients, which gives secure and correct operation with CCVTs.

2.3 SNTP server requirements

The SNTP server to be used is connected to the local network, that is not more than 4-5 switches or routers away from the IED. The SNTP server is dedicated for its task, or at least equipped with a real-time operating system, that is not a PC with SNTP server software. The SNTP server should be stable, that is, either synchronized from a stable source like GPS, or local without synchronization. Using a local SNTP server without synchronization as primary or secondary server in a redundant configuration is not recommended.

Section 3 IED application

About this chapter

This chapter describes the use of the included software functions in the IED. The chapter discusses application possibilities and gives guidelines for calculating settings for a particular application.

3.1 General IED application

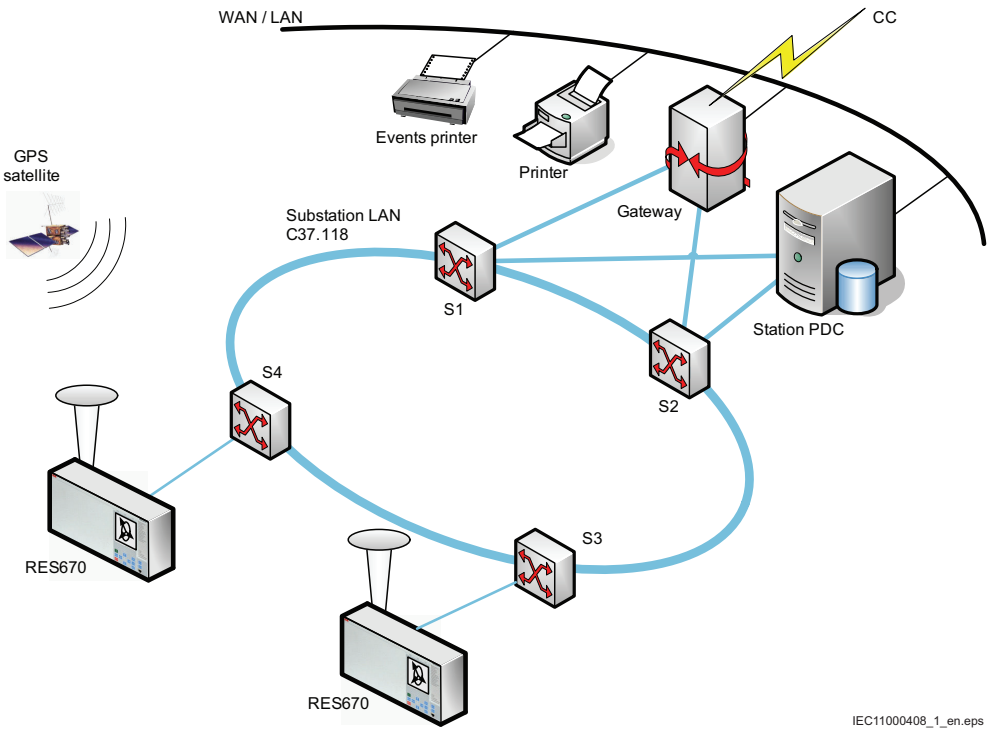

Figure 1: PMUs in a substation

RES 670 is a Phasor Measurement Unit that provides power system AC voltages and currents as phasors, that is as real and imaginary parts or as magnitude and phase angle. The reference for the phase angle is the NavStar Global Positioning System – GPS that also supplies highly accurate time and date. The accurate time tagging of

measurements taken at different geographical locations make it possible to derive the phasor quantities. Based on phasors a number of power system applications are available.

Phasor Measurement Units (PMUs) have so far been mainly used for recording and on-line supervision of Wide Area Measurement System (WAMS) applications. In a typical setup, 10-20 PMUs at different locations in a synchronized power network, streams phasor data together with power flow data and frequency, to a data concentrator.

The data concentrator is usually a mass storage with capacity for about one week of data in a FIFO buffer. In case of any disturbance it should be very easy to access the data recorded to support the disturbance analysis process. The phasor data is normally sent from the PMU to the data concentrator at a speed of 25/30 or 50/60 samples per channel and second. The number of sampled channels is typically 10-20. Phasor data is normally understood as the magnitude and phase angle of the positive sequence voltage or current. The common reference for the angle measurement is the GPS system, which provides precise time reference. Since every measurement sent to the data concentrator is time tagged, any angle difference between power system AC quantities can be derived.

3.2 Analog inputs

3.2.1 Introduction

Analog input channels must be configured and set properly to get correct measurement results and correct protection operations. For power measuring and all directional and differential functions the directions of the input currents must be defined properly. Measuring and protection algorithms in the IED use primary system quantities. Setting values are in primary quantities as well and it is important to set the data about the connected current and voltage transformers properly.

A reference *PhaseAngleRef* can be defined to facilitate service values reading. This analog channels phase angle will always be fixed to zero degrees and all other angle information will be shown in relation to this analog input. During testing and commissioning of the IED the reference channel can be changed to facilitate testing and service values reading.

The availability of VT inputs depends on the ordered transformer input module (TRM) type.

3.2.2 Setting guidelines

The available setting parameters related to analog inputs are depending on the actual hardware (TRM) and the logic configuration made in PCM600.

3.2.2.1 Setting of the phase reference channel

All phase angles are calculated in relation to a defined reference. An appropriate analog input channel is selected and used as phase reference. The parameter *PhaseAngleRef* defines the analog channel that is used as phase angle reference.

Example

The setting shall be used if a phase-to-ground voltage (usually the A phase-to-ground voltage connected to VT channel number of the analog card) is selected to be the phase reference.

Setting of current channels

The direction of a current to the IED is depending on the connection of the CT. Unless indicated otherwise, the main CTs are supposed to be Wye (star) connected and can be connected with the grounding point to the object or from the object. This information must be set in the IED. The convention of the directionality is defined as follows: A positive value of current, power, and so on means that the quantity has the direction into the object and a negative value means direction out from the object. For directional functions the direction into the object is defined as Forward and the direction out from the object is defined as Reverse. See figure 2

A positive value of current, power, and so on (forward) means that the quantity has a direction towards the object. - A negative value of current, power, and so on (reverse) means a direction away from the object. See figure 2.

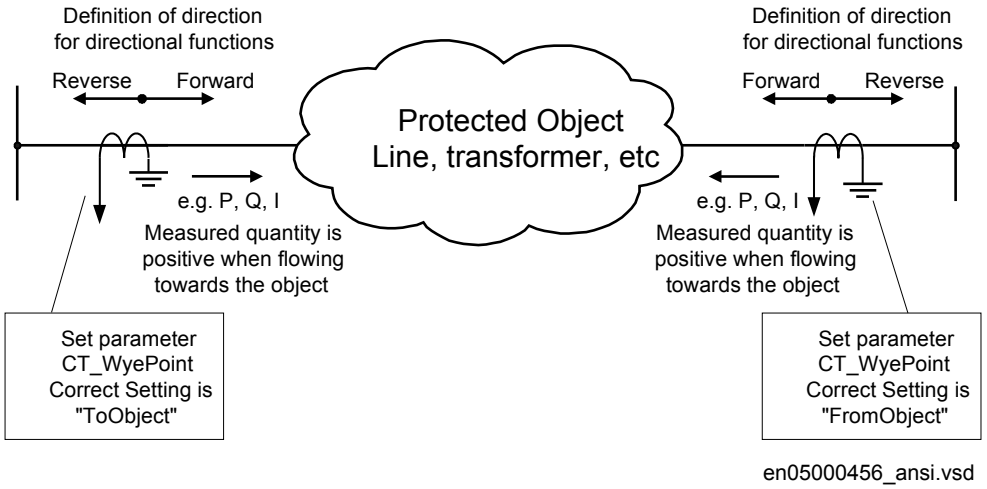

Figure 2: Internal convention of the directionality in the IED

With correct setting of the primary CT direction, *CT_WyePoint* set to *FromObject* or *ToObject*, a positive quantities always flowing towards the object and a direction defined as Forward always is looking towards the object. The following examples show the principle.

Example 1

Two IEDs used for protection of two objects.

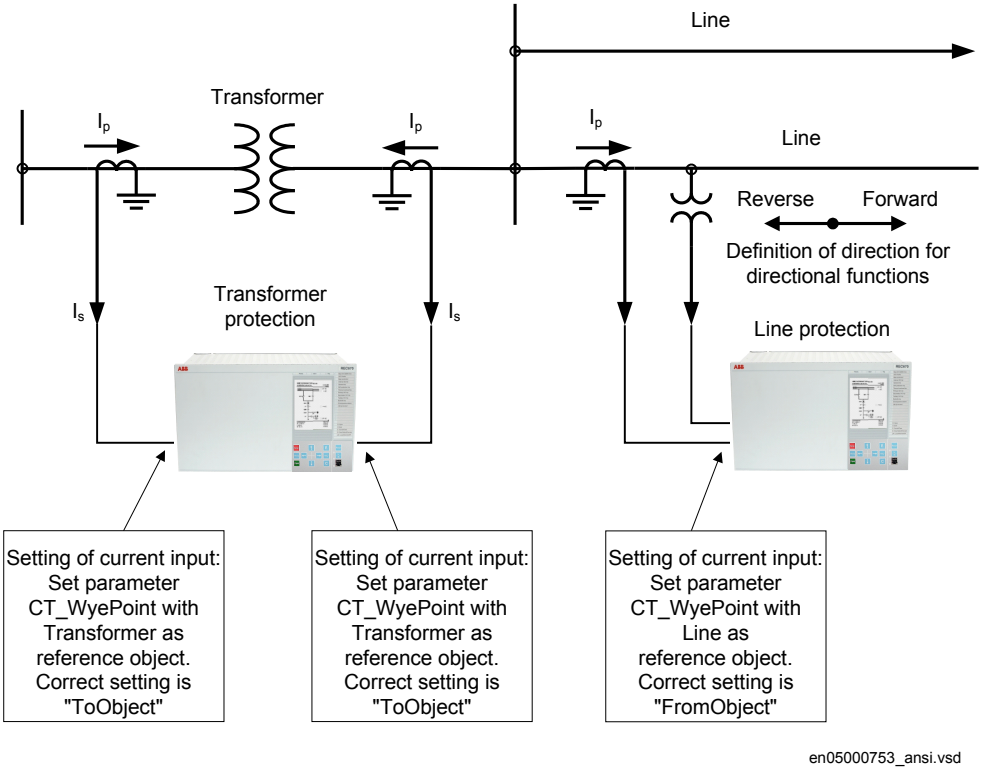

Figure 3: Example how to set CT_WyePoint parameters in the IED

The figure 3 shows the normal case where the objects have their own CTs. The settings for CT direction shall be done according to the figure. To protect the line the direction of the directional functions of the line protection shall be set to *Forward*. This means that the protection is looking towards the line.

Example 2

Two IEDs used for protection of two objects and sharing a CT.

Figure 4: Example how to set CT_WyePoint parameters in the IED

This example is similar to example 1, but here the transformer is feeding just one line and the line protection uses the same CT as the transformer protection does. The CT direction is set with different reference objects for the two IEDs though it is the same current from the same CT that is feeding the two IEDs. With these settings the directional functions of the line protection shall be set to *Forward* to look towards the line.

Example 3

One IED used to protect two objects.

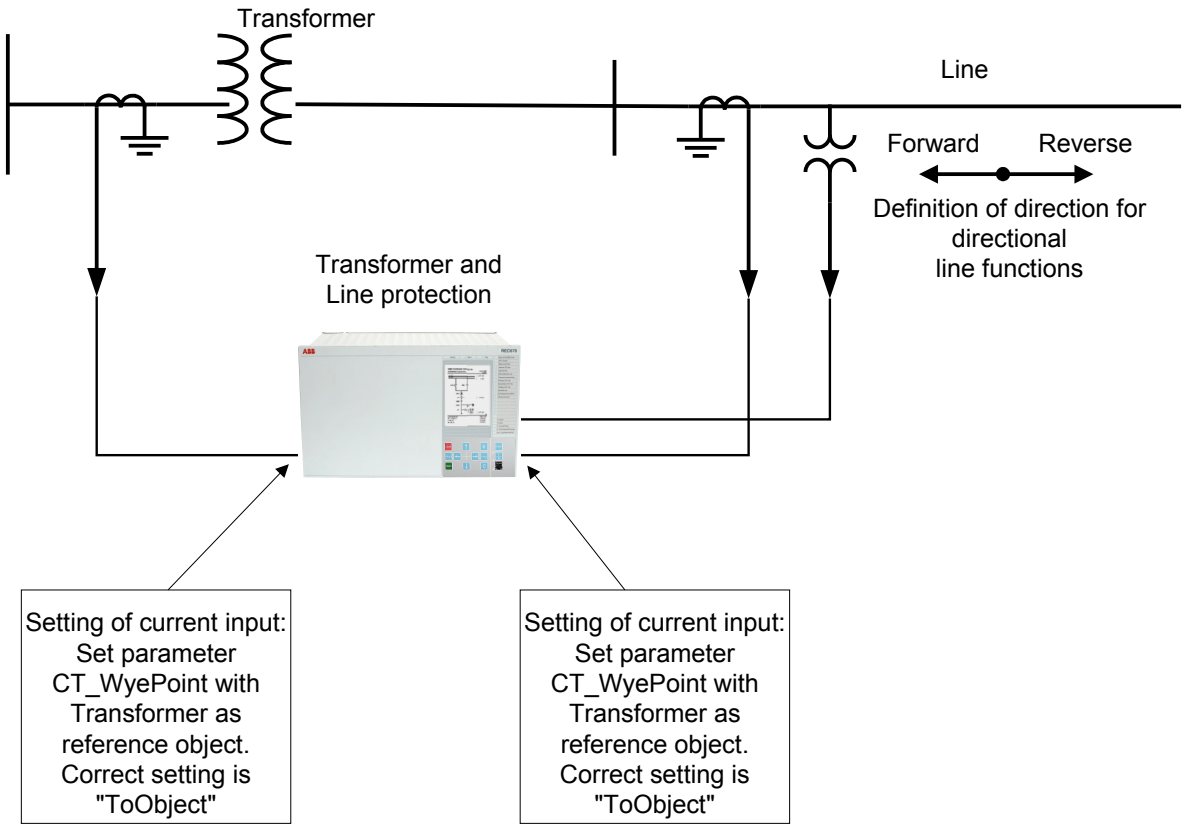

Figure 5: Example how to set CT_WyePoint parameters in the IED

In this example one IED includes both transformer and line protection and the line protection uses the same CT as the transformer protection does. For both current input channels the CT direction is set with the transformer as reference object. This means that the direction Forward for the line protection is towards the transformer. To look towards the line the direction of the directional functions of the line protection must be set to *Reverse*. The direction *Forward*/*Reverse* is related to the reference object that is the transformer in this case.

When a function is set to *Reverse* and shall protect an object in reverse direction it shall be noted that some directional functions are not symmetrical regarding the reach in forward and reverse direction. It is in first hand the reach of the directional criteria that can differ. Normally it is not any limitation but it is advisable to have it in mind and check if it is acceptable for the application in question.

If the IED has a sufficient number of analog current inputs an alternative solution is shown in figure 6. The same currents are fed to two separate groups of inputs and the

line and transformer protection functions are configured to the different inputs. The CT direction for the current channels to the line protection is set with the line as reference object and the directional functions of the line protection shall be set to *Forward* to protect the line.

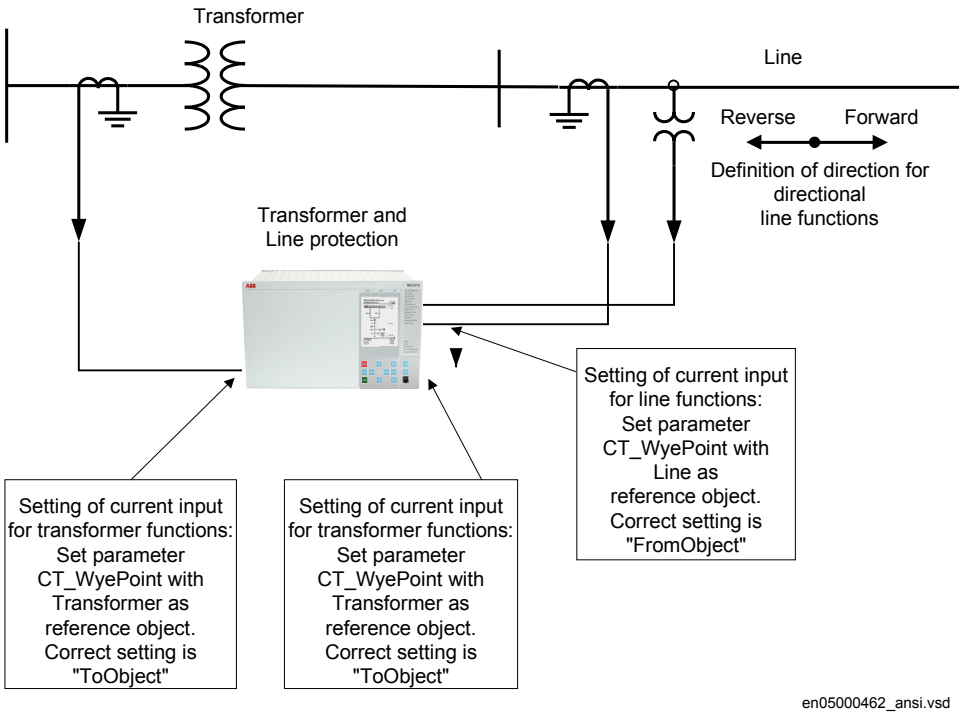

Figure 6: Example how to set CT_WyePoint parameters in the IED

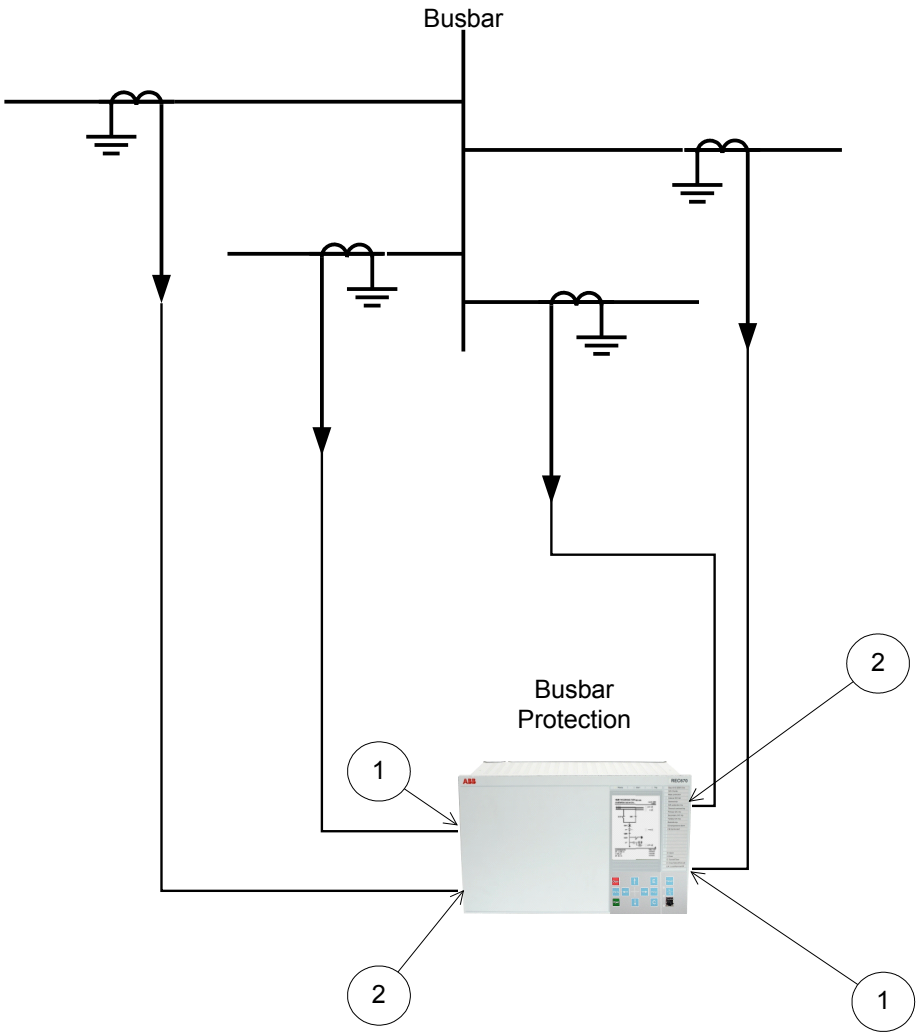

Figure 7: Example how to set CT_WyePoint parameters in the IED

For busbar protection it is possible to set the *CT_WyePoint* parameters in two ways.

The first solution will be to use busbar as a reference object. In that case for all CT inputs marked with 1 in figure 7, set *CT_WyePoint = ToObject*, and for all CT inputs marked with 2 in figure 7, set *CT_WyePoint = FromObject*.

The second solution will be to use all connected bays as reference objects. In that case for all CT inputs marked with 1 in figure 7, set *CT_WyePoint = FromObject*, and for all CT inputs marked with 2 in figure 7, set *CT_WyePoint = ToObject*.

Regardless which one of the above two options is selected busbar differential protection will behave correctly.

The main CT ratios must also be set. This is done by setting the two parameters *CTsec* and *CTprim* for each current channel. For a 1000/5 A CT the following setting shall be used:

- *CTprim = 1000* (value in A)
- *CTsec =5* (value in A).

Examples on how to connect, configure and set CT inputs for most commonly used CT connections

Figure 8 defines the marking of current transformer terminals commonly used around the world:

In the SMAI function block, you have to set if the SMAI block is measuring current or voltage. This is done with the parameter: *AnalogInputType*: Current/voltage. The *ConnectionType*: phase -phase/ phase-earth and *GlobalBaseSel*.

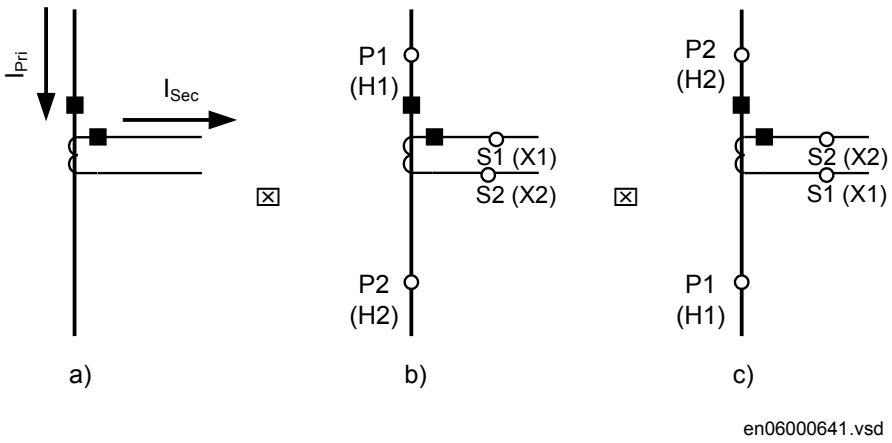

Figure 8: Commonly used markings of CT terminals

Where:

a) is symbol and terminal marking used in this document. Terminals marked with a dot indicates the primary and secondary winding terminals with the same (that is, positive) polarity

b) and c) are equivalent symbols and terminal marking used by IEC (ANSI) standard for CTs. Note that for these two cases the CT polarity marking is correct!

It shall be noted that depending on national standard and utility practices, the rated secondary current of a CT has typically one of the following values:

- 1A
- 5A

However in some cases the following rated secondary currents are used as well:

- 2A
- 10A

The IED fully supports all of these rated secondary values.

It is recommended to:

- use 1A rated CT input into the IED in order to connect CTs with 1A and 2A secondary rating
- use 5A rated CT input into the IED in order to connect CTs with 5A and 10A secondary rating

Example on how to connect a wye connected three-phase CT set to the IED

Figure 9 gives an example about the wiring of a wye connected three-phase CT set to the IED. It gives also an overview of the actions which are needed to make this measurement available to the built-in protection and control functions within the IED as well.

For correct terminal designations, see the connection diagrams valid for the delivered IED.

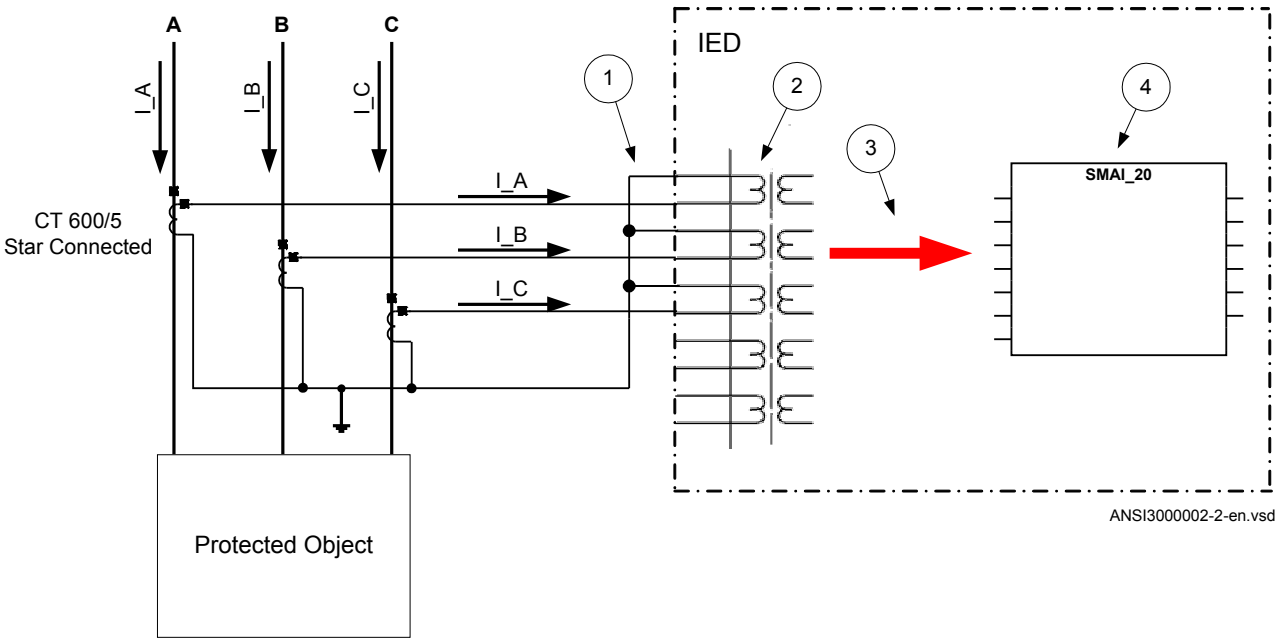

Figure 9: Wye connected three-phase CT set with wye point towards the protected object

Where:

1) The drawing shows how to connect three individual phase currents from a wye connected three-phase CT set to the three CT inputs of the IED.

2) The current inputs are located in the TRM. It shall be noted that for all these current inputs the following setting values shall be entered for the example shown in Figure9.

- CTprim=600A
- CTsec=5A
- CTStarPoint=ToObject

Inside the IED only the ratio of the first two parameters is used. The third parameter (CTStarPoint=ToObject) as set in this example causes no change on the measured currents. In other words, currents are already measured towards the protected object.

Table continues on next page

3) These three connections are the links between the three current inputs and the three input channels of the preprocessing function block 4). Depending on the type of functions, which need this current information, more than one preprocessing block might be connected in parallel to the same three physical CT inputs.

4) The preprocessing block that has the task to digitally filter the connected analog inputs and calculate:

- fundamental frequency phasors for all three input channels
- harmonic content for all three input channels
- positive, negative and zero sequence quantities by using the fundamental frequency phasors for the first three input channels (channel one taken as reference for sequence quantities)

These calculated values are then available for all built-in protection and control functions within the IED, which are connected to this preprocessing function block. For this application most of the preprocessing settings can be left to the default values.
If frequency tracking and compensation is required (this feature is typically required only for IEDs installed in power plants), then the setting parameters DFTReference shall be set accordingly.
Section SMAI in this manual provides information on adaptive frequency tracking for the signal matrix for analogue inputs (SMAI).

5) AI3P in the SMAI function block is a grouped signal which contains all the data about the phases L1, L2, L3 and neutral quantity; in particular the data about fundamental frequency phasors, harmonic content and positive sequence, negative and zero sequence quantities are available.
AI1, AI2, AI3, AI4 are the output signals from the SMAI function block which contain the fundamental frequency phasors and the harmonic content of the corresponding input channels of the preprocessing function block.
AIN is the signal which contains the fundamental frequency phasors and the harmonic content of the neutral quantity; this data is calculated by the preprocessing function block on the basis of the inputs GRPL1, GRPL2 and GRPL3.

Another alternative is to have the star point of the three-phase CT set as shown in the figure below:

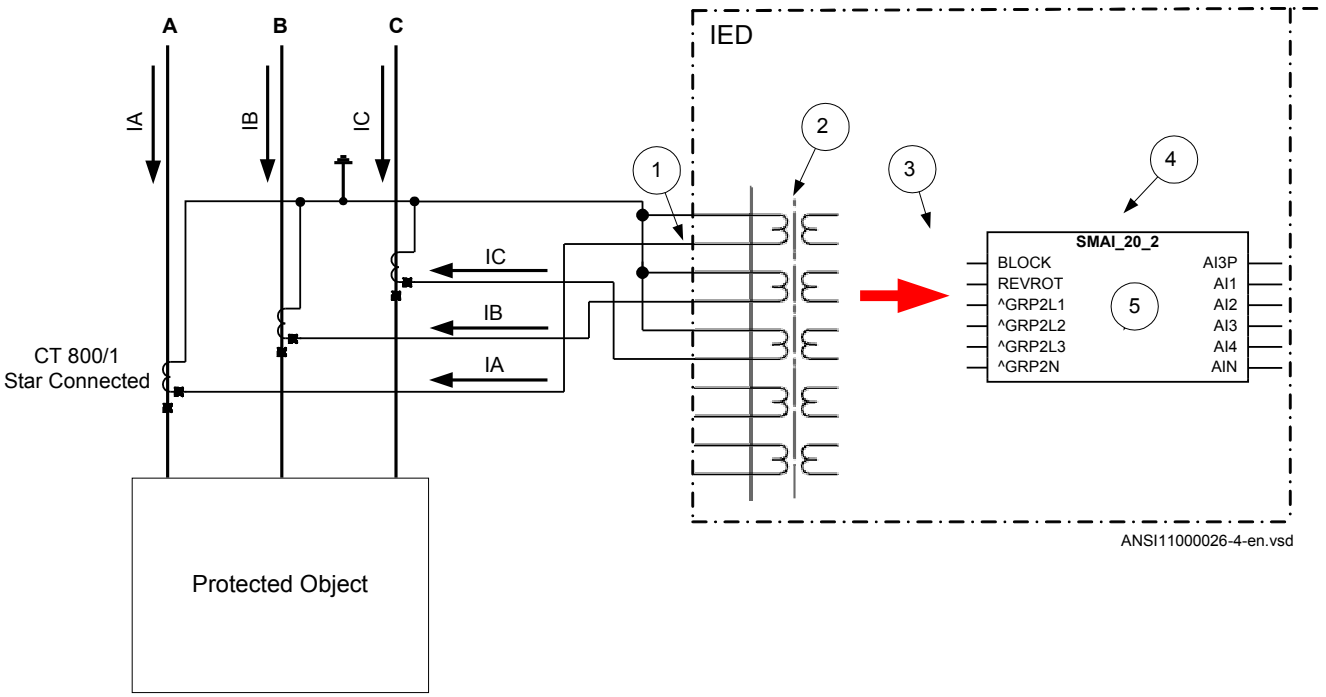

Figure 10: Wye connected three-phase CT set with its star point away from the protected object

In the example in figure 10 case everything is done in a similar way as in the above described example (figure 9). The only difference is the setting of the parameter *CTStarPoint* of the used current inputs on the TRM (item 2 in the figure):

- *CTprim*=600A
- *CTsec*=5A
- *CTWyePoint*=FromObject

Inside the IED only the ratio of the first two parameters is used. The third parameter as set in this example will negate the measured currents in order to ensure that the currents are measured towards the protected object within the IED.

A third alternative is to have the residual/neutral current from the three-phase CT set connected to the IED as shown in the figure below.

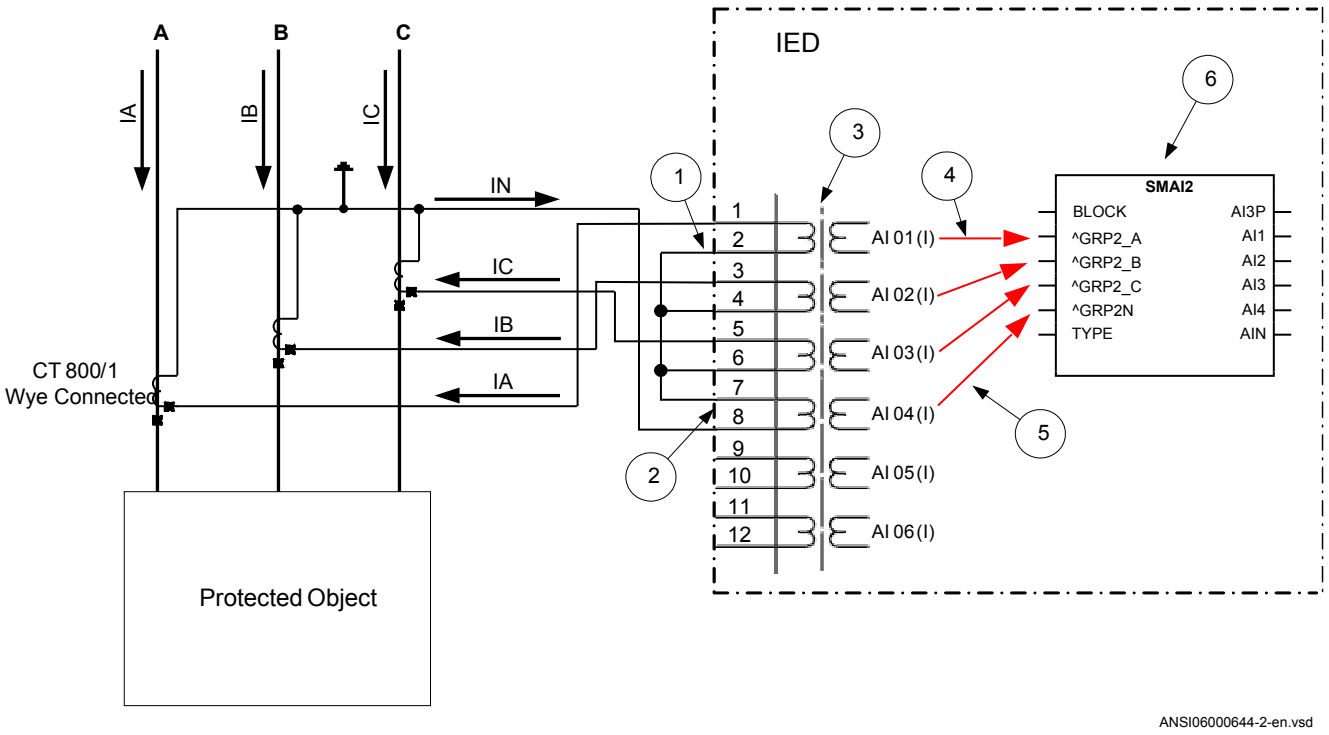

Figure 11: Wye connected three-phase CT set with its star point away from the protected object and the residual/ neutral current connected to the IED

Where:

1) The drawing shows how to connect three individual phase currents from a wye connected three-phase CT set to the three CT inputs of the IED.

2) shows how to connect residual/neutral current from the three-phase CT set to the fourth inputs in the IED. It shall be noted that if this connection is not made, the IED will still calculate this current internally by vectorial summation of the three individual phase currents.

3) is the TRM where these current inputs are located. It shall be noted that for all these current inputs the following setting values shall be entered.

- CTprim=800A
- CTsec=1A
- CTStarPoint=FromObject
- ConnectionType=Ph-N

Inside the IED only the ratio of the first two parameters is used. The third parameter as set in this example will have no influence on the measured currents (that is, currents are already measured towards the protected object).

4) are three connections made in the Signal Matrix tool (SMT), Application configuration tool (ACT), which connects these three current inputs to the first three input channels on the preprocessing function block 6). Depending on the type of functions, which need this current information, more than one preprocessing block might be connected in parallel to these three CT inputs.

Table continues on next page

5) is a connection made in the Signal Matrix tool (SMT), Application configuration tool (ACT), which connects the residual/neutral current input to the fourth input channel of the preprocessing function block 6). Note that this connection in SMT shall not be done if the residual/neutral current is not connected to the IED. In that case the pre-processing block will calculate it by vectorial summation of the three individual phase currents.

6) is a Preprocessing block that has the task to digitally filter the connected analog inputs and calculate:

- fundamental frequency phasors for all four input channels
- harmonic content for all four input channels
- positive, negative and zero sequence quantities by using the fundamental frequency phasors for the first three input channels (channel one taken as reference for sequence quantities)

These calculated values are then available for all built-in protection and control functions within the IED, which are connected to this preprocessing function block in the configuration tool. For this application most of the preprocessing settings can be left to the default values.
If frequency tracking and compensation is required (this feature is typically required only for IEDs installed in the generating stations), then the setting parameters DFTReference shall be set accordingly.

Example how to connect delta connected three-phase CT set to the IED

Figure 12 gives an example how to connect a delta connected three-phase CT set to the IED. It gives an overview of the required actions by the user in order to make this measurement available to the built-in protection and control functions in the IED as well.

For correct terminal designations, see the connection diagrams valid for the delivered IED.

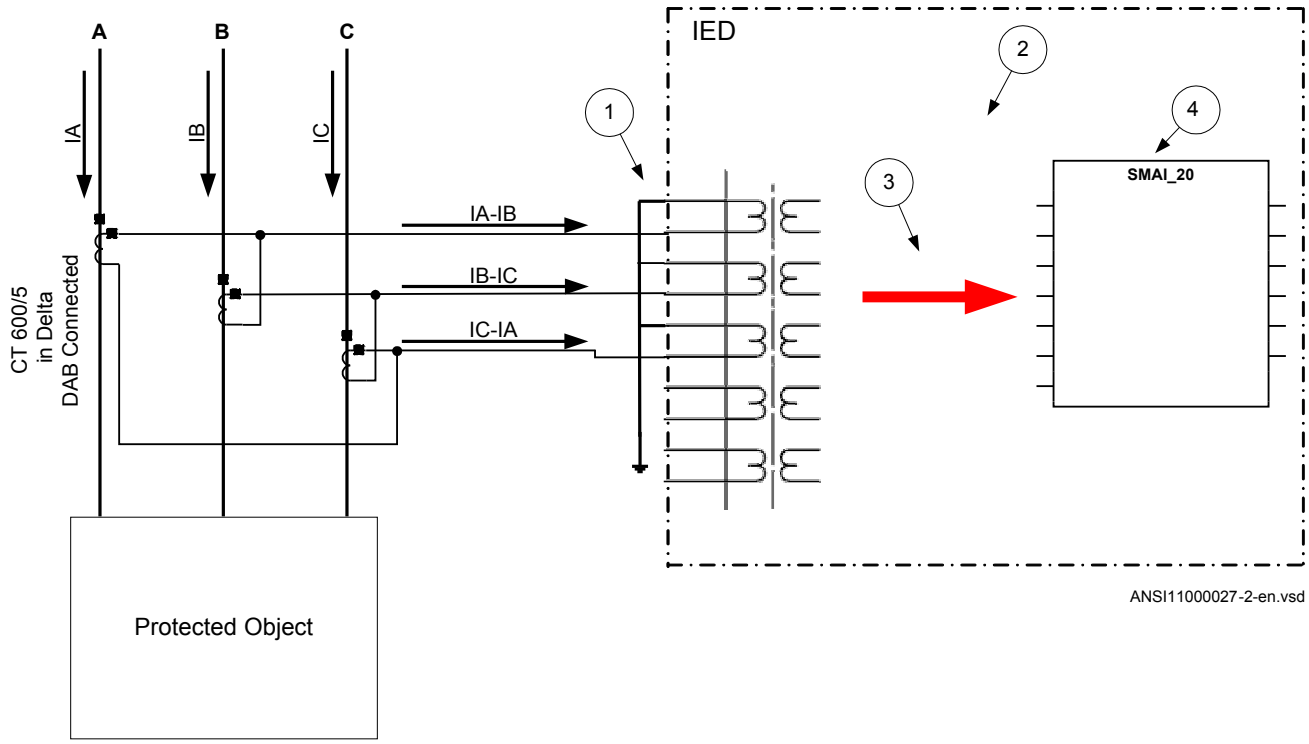

Figure 12: Delta DAB connected three-phase CT set

Where:

1) shows how to connect three individual phase currents from a delta connected three-phase CT set to three CT inputs of the IED.

2) is the TRM where these current inputs are located. It shall be noted that for all these current inputs the following setting values shall be entered.
CT_{prim}=600A
CT_{sec}=5A

- *CTWyePoint=ToObject*
- *ConnectionType=Ph-Ph*

3) are three connections made in Signal Matrix Tool (SMT), Application configuration tool (ACT), which connect these three current inputs to first three input channels of the preprocessing function block 4). Depending on the type of functions which need this current information, more then one preprocessing block might be connected in parallel to these three CT inputs.

4) is a Preprocessing block that has the task to digitally filter the connected analog inputs and calculate:

- fundamental frequency phasors for all three input channels
- harmonic content for all three input channels
- positive, negative and zero sequence quantities by using the fundamental frequency phasors for the first three input channels (channel one taken as reference for sequence quantities)

These calculated values are then available for all built-in protection and control functions within the IED, which are connected to this preprocessing function block. For this application most of the preprocessing settings can be left to the default values.
If frequency tracking and compensation is required (this feature is typically required only for IEDs installed in the generating stations) then the setting parameters *DFTReference* shall be set accordingly.

Another alternative is to have the delta connected CT set as shown in figure 13:

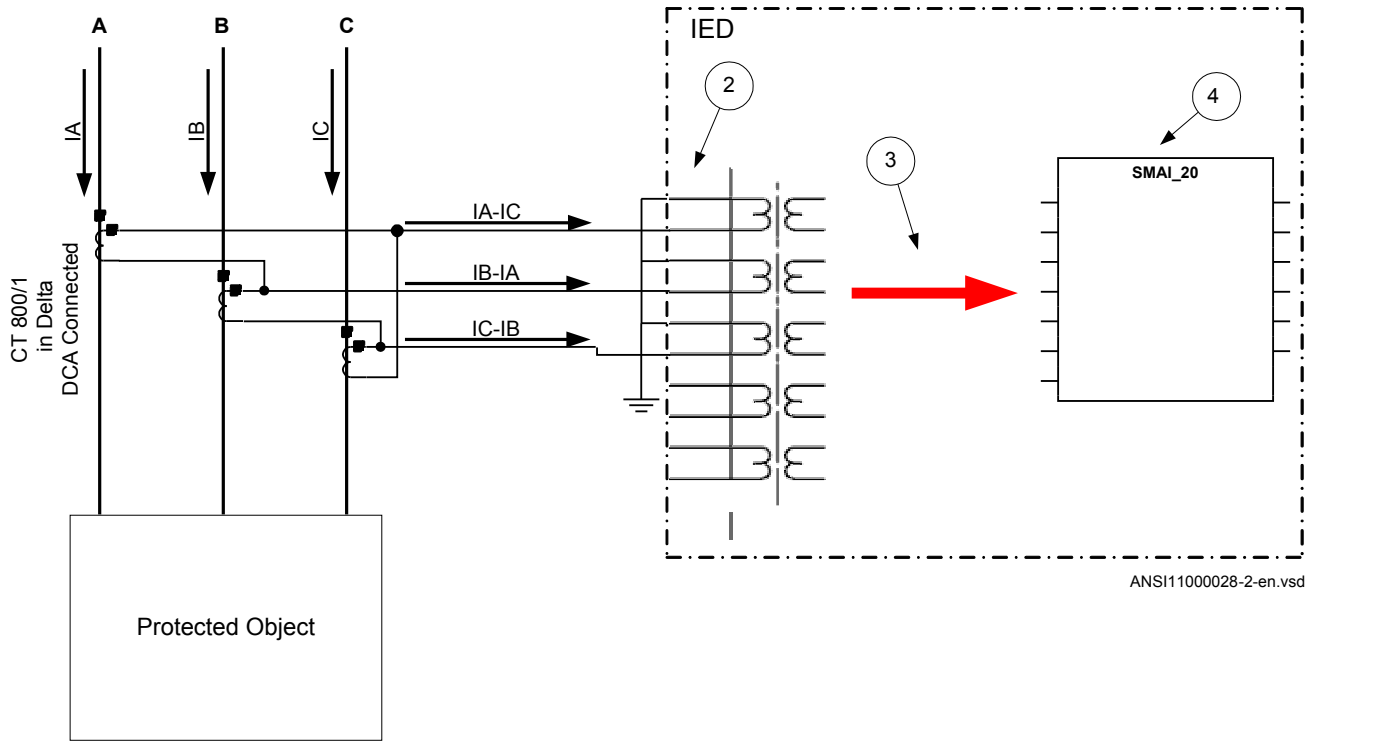

Figure 13: Delta DAC connected three-phase CT set

In this case, everything is done in a similar way as in the above described example, except that for all used current inputs on the TRM the following setting parameters shall be entered:

CT_{prim}=800A

CT_{sec}=1A

- *CTWyePoint*=ToObject
- *ConnectionType=Ph-Ph*

It is important to notice the references in SMAI. As inputs at *Ph-Ph* are expected to be A-B, B-Crespectively C-A we need to tilt 180º by setting *ToObject*.

Example how to connect single-phase CT to the IED

Figure 14 gives an example how to connect the single-phase CT to the IED. It gives an overview of the required actions by the user in order to make this measurement available to the built-in protection and control functions within the IED as well.

For correct terminal designations, see the connection diagrams valid for the delivered IED.

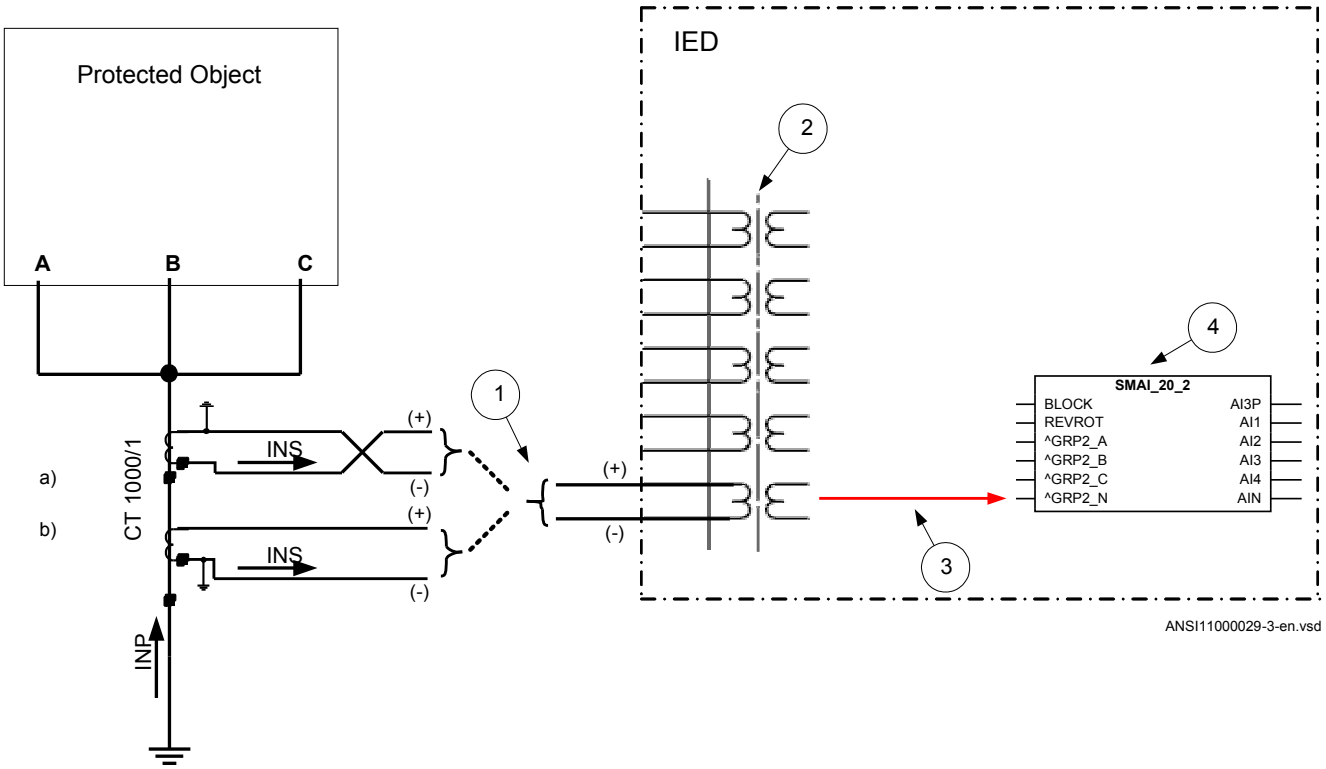

Figure 14: Connections for single-phase CT input

Where:

1) shows how to connect single-phase CT input in the IED.

2) is TRM where these current inputs are located. It shall be noted that for all these current inputs the following setting values shall be entered.
For connection (a) shown in figure 14:
*CT*prim = 1000 A
*CT*sec = 1A
CTWyePoint=ToObject

For connection (b) shown in figure 14:
*CT*prim = 1000 A
*CT*sec = 1A
CTWyePoint=FromObject

3) shows the connection made in SMT tool, which connect this CT input to the fourth input channel of the preprocessing function block 4).

4) is a Preprocessing block that has the task to digitally filter the connected analog inputs and calculate values. The calculated values are then available for all built-in protection and control functions within the IED, which are connected to this preprocessing function block. If frequency tracking and compensation is required (this feature is typically required only for IEDs installed in the power plants) then the setting parameters *DFTReference* shall be set accordingly.

Setting of voltage channels

As the IED uses primary system quantities the main VT ratios must be known to the IED. This is done by setting the two parameters *VTsec* and *VTprim* for each voltage channel. The phase-to-phase value can be used even if each channel is connected to a phase-to-ground voltage from the VT.

Example

Consider a VT with the following data:

$$\frac{132\text{kV}}{\sqrt{3}} \Big/ \frac{120\text{V}}{\sqrt{3}}$$

(Equation 6)

The following setting should be used: *VTprim=132* (value in kV) *VTsec=120* (value in V)

Examples how to connect, configure and set VT inputs for most commonly used VT connections

Figure 15 defines the marking of voltage transformer terminals commonly used around the world.

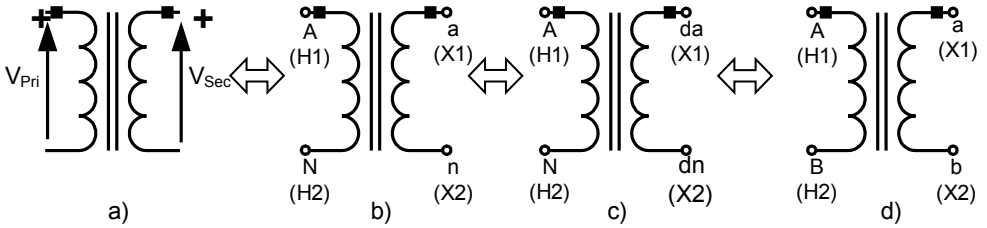

Figure 15: Commonly used markings of VT terminals

Where:

a) is the symbol and terminal marking used in this document. Terminals marked with a dot indicate the primary and secondary winding terminals with the same (positive) polarity

b) is the equivalent symbol and terminal marking used by IEC (ANSI) standard for phase-to-ground connected VTs

c) is the equivalent symbol and terminal marking used by IEC (ANSI) standard for open delta connected VTs

d) is the equivalent symbol and terminal marking used by IEC (ANSI) standard for phase-to-phase connected VTs

It shall be noted that depending on national standard and utility practices the rated secondary voltage of a VT has typically one of the following values:

- 100 V
- 110 V
- 115 V
- 120 V
- 230 V

The IED fully supports all of these values and most of them will be shown in the following examples.

Examples on how to connect a three phase-to-ground connected VT to the IED

Figure 16 gives an example on how to connect the three phase-to-ground connected VT to the IED. It as well gives overview of required actions by the user in order to make this measurement available to the built-in protection and control functions within the IED.

For correct terminal designations, see the connection diagrams valid for the delivered IED.

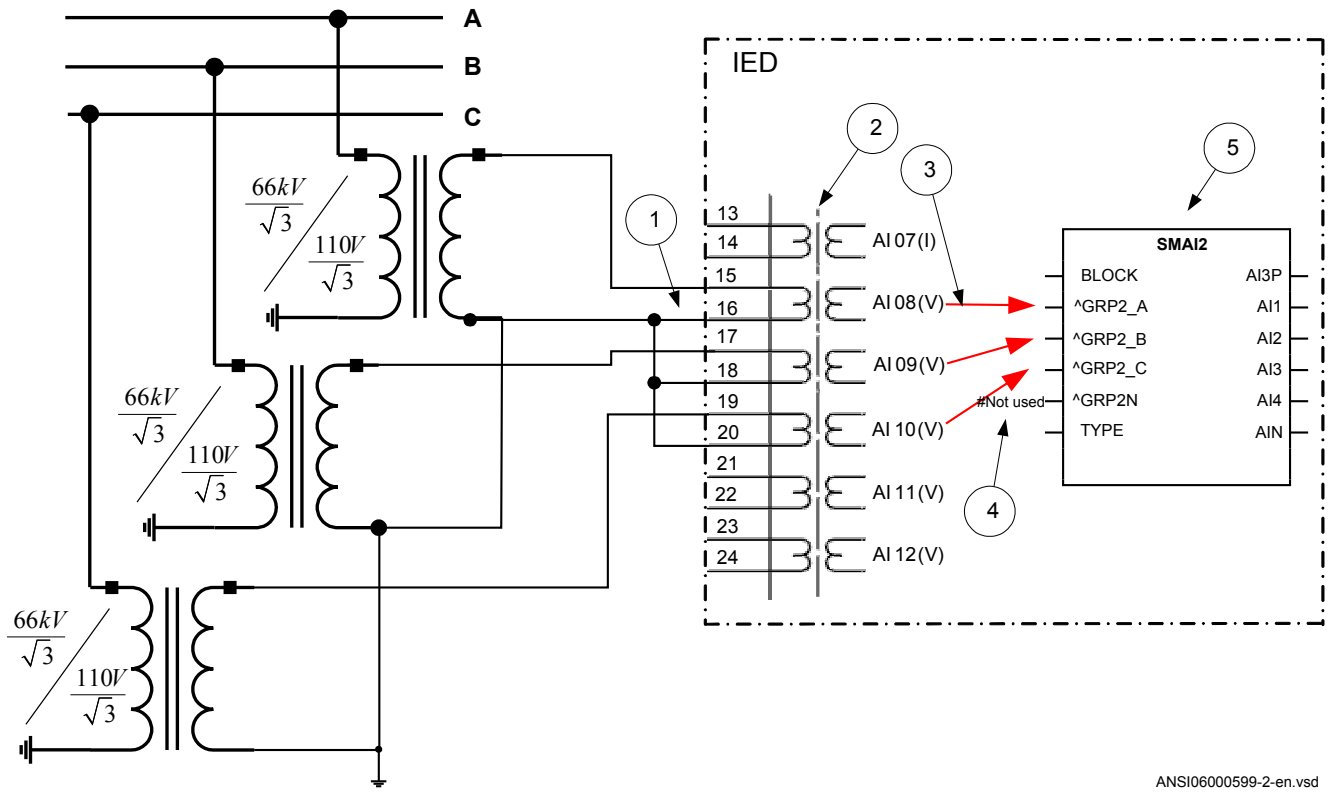

Figure 16: A Three phase-to-ground connected VT

Where:

1) shows how to connect three secondary phase-to-ground voltages to three VT inputs on the IED

2) is the TRM where these three voltage inputs are located. For these three voltage inputs, the following setting values shall be entered:
VTprim = 66 kV
VTsec = 110 V
Inside the IED, only the ratio of these two parameters is used. It shall be noted that the ratio of the entered values exactly corresponds to ratio of one individual VT.

$$\frac{66}{110} = \frac{66/\sqrt{3}}{110/\sqrt{3}}$$

(Equation 7)

Table continues on next page

3) are three connections made in Signal Matrix Tool (SMT), which connect these three voltage inputs to first three input channels of the preprocessing function block 5). Depending on the type of functions which need this voltage information, more then one preprocessing block might be connected in parallel to these three VT inputs.

4) shows that in this example the fourth (that is, residual) input channel of the preprocessing block is not connected in SMT tool. Thus the preprocessing block will automatically calculate 3Vo inside by vectorial sum from the three phase to ground voltages connected to the first three input channels of the same preprocessing block. Alternatively, the fourth input channel can be connected to open delta VT input, as shown in figure 18.

5) is a Preprocessing block that has the task to digitally filter the connected analog inputs and calculate:

- fundamental frequency phasors for all four input channels
- harmonic content for all four input channels
- positive, negative and zero sequence quantities by using the fundamental frequency phasors for the first three input channels (channel one taken as reference for sequence quantities)

These calculated values are then available for all built-in protection and control functions within the IED, which are connected to this preprocessing function block in the configuration tool. For this application most of the preprocessing settings can be left to the default values. However the following settings shall be set as shown here:
VBase=66 kV (that is, rated Ph-Ph voltage)
If frequency tracking and compensation is required (this feature is typically required only for IEDs installed in the generating stations) then the setting parameters *DFTReference* shall be set accordingly.

Example on how to connect a phase-to-phase connected VT to the IED

Figure 17 gives an example how to connect a phase-to-phase connected VT to the IED. It gives an overview of the required actions by the user in order to make this measurement available to the built-in protection and control functions within the IED as well. It shall be noted that this VT connection is only used on lower voltage levels (that is, rated primary voltage below 40 kV).

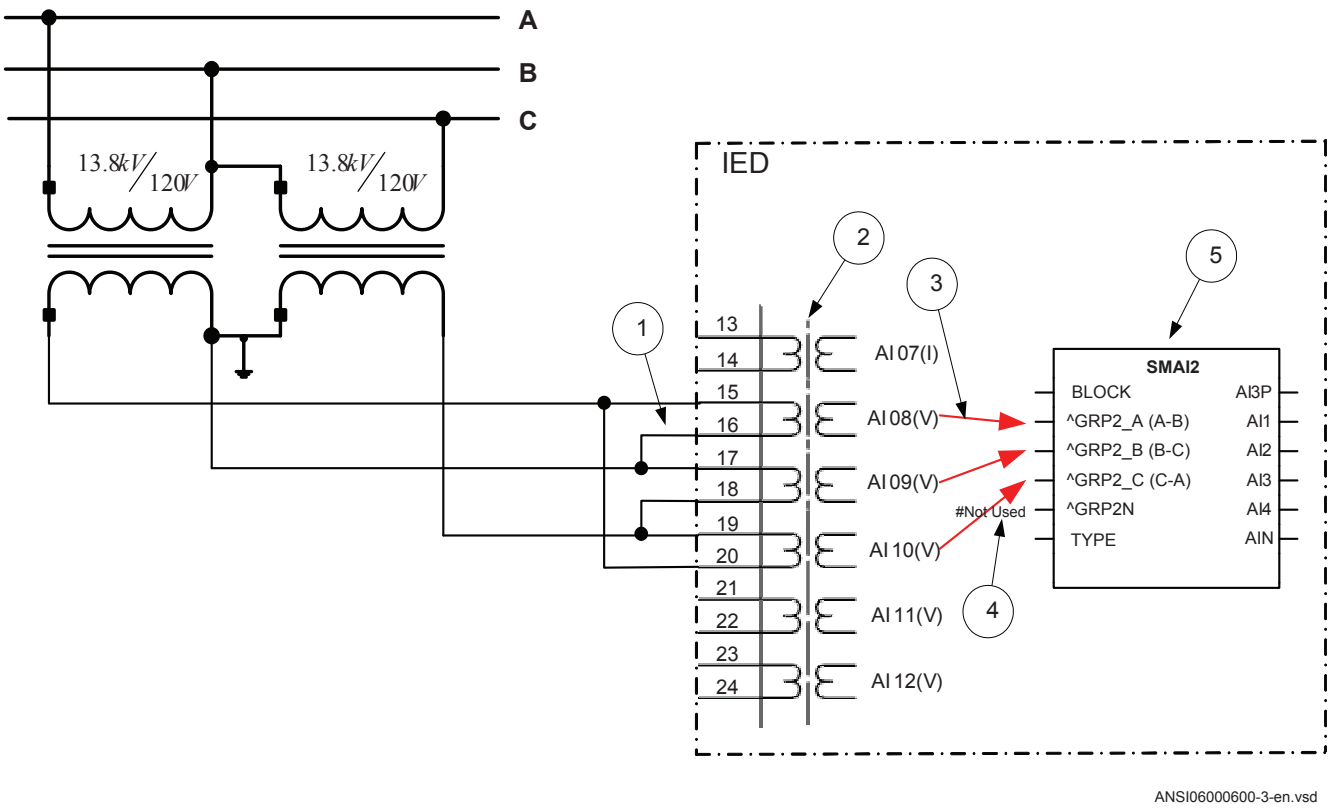

Figure 17: A Two phase-to-phase connected VT

Where:

1) shows how to connect the secondary side of a phase-to-phase VT to the VT inputs on the IED

2) is the TRM where these three voltage inputs are located. It shall be noted that for these three voltage inputs the following setting values shall be entered:
VTprim=13.8 kV
VTsec=120 V
Please note that inside the IED only ratio of these two parameters is used.

Table continues on next page

3) are three connections made in the Signal Matrix tool (SMT), Application configuration tool (ACT), which connects these three voltage inputs to first three input channels of the preprocessing function block 5). Depending on the type of functions, which need this voltage information, more than one preprocessing block might be connected in parallel to these three VT inputs

4) shows that in this example the fourth (that is, residual) input channel of the preprocessing block is not connected in SMT. Note. If the paameters V_A, V_B, V_C, V_N should be used the open delta must be connected here.

5) Preprocessing block has a task to digitally filter the connected analog inputs and calculate:

- fundamental frequency phasors for all four input channels
- harmonic content for all four input channels
- positive, negative and zero sequence quantities by using the fundamental frequency phasors for the first three input channels (channel one taken as reference for sequence quantities)

These calculated values are then available for all built-in protection and control functions within the IED, which are connected to this preprocessing function block in the configuration tool. For this application most of the preprocessing settings can be left to the default values. However the following settings shall be set as shown here:
ConnectionType=Ph-Ph
VBase=13.8 kV
If frequency tracking and compensation is required (this feature is typically required only for IEDs installed in the generating stations) then the setting parameters *DFTReference* shall be set accordingly.

Example on how to connect an open delta VT to the IED for high impedance grounded or ungrounded netwoeks

Figure 18 gives an example about the wiring of an open delta VT to the IED for high impedance grounded or ungrounded power systems. It shall be noted that this type of VT connection presents a secondary voltage proportional to 3V0 to the IED.

In case of a solid ground fault close to the VT location the primary value of 3Vo will be equal to:

$$3Vo = \sqrt{3} \cdot V_{Ph-Ph} = 3 \cdot V_{Ph-Gnd}$$

(Equation 8)

The primary rated voltage of an open Delta VT is always equal to $V_{Ph\text{-}Gnd}$. Three series connected VT secondary windings gives a secondary voltage equal to three times the individual VT secondary winding rating. Thus the secondary windings of open delta VTs quite often have a secondary rated voltage equal to one third of the rated phase-to-phase VT secondary voltage (110/3V in this particular example).

Figure 18 gives overview of required actions by the user in order to make this measurement available to the built-in protection and control functions within the IED as well.

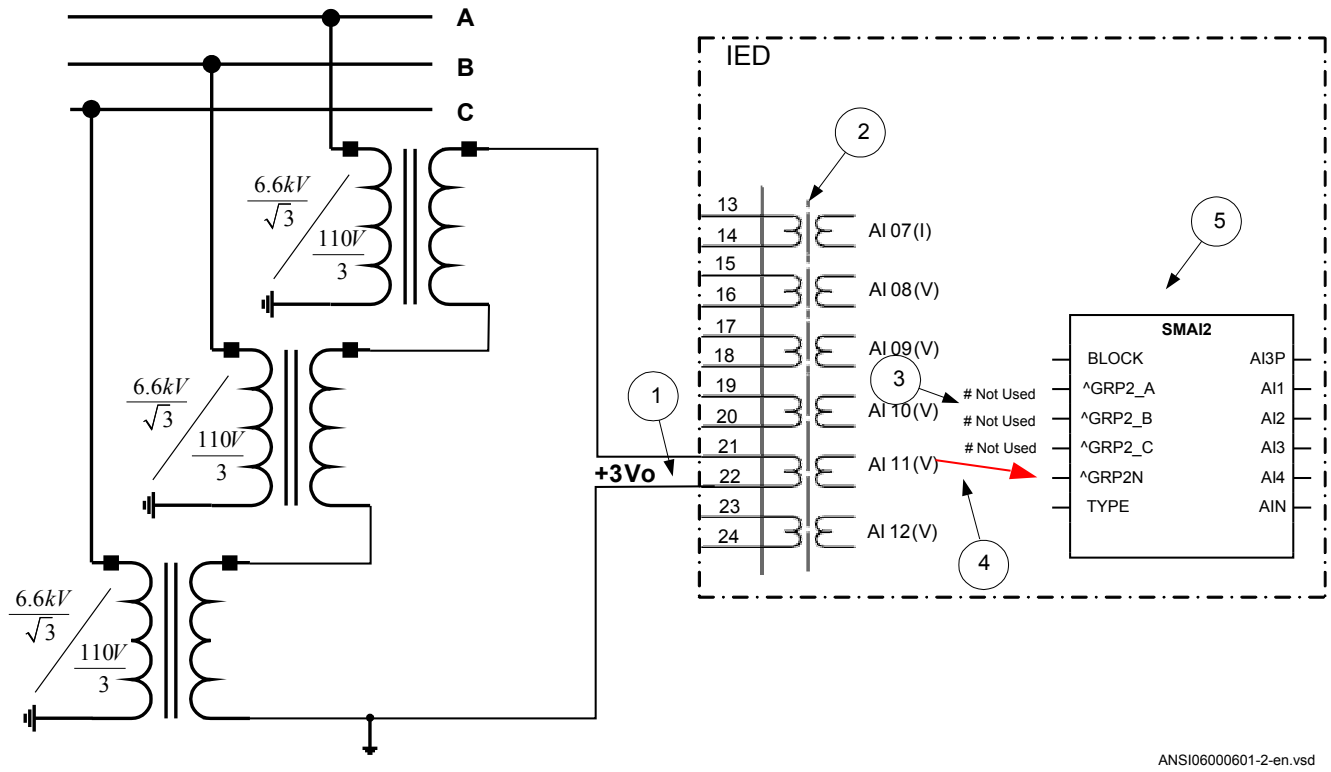

Figure 18: Open delta connected VT in high impedance grounded power system

Where:

1) shows how to connect the secondary side of the open delta VT to one VT input on the IED.

+3Vo shall be connected to the IED

2) is the TRM where this voltage input is located. It shall be noted that for this voltage input the following setting values shall be entered:

$$VTprim = \sqrt{3} \cdot 6.6 = 11.43kV$$

(Equation 9)

$$VT\,\text{sec} = 3 \cdot \frac{110}{3} = 110V$$

(Equation 10)

Inside the IED, only the ratio of these two parameters is used. It shall be noted that the ratio of the entered values exactly corresponds to ratio of one individual open delta VT.

$$\frac{\sqrt{3} \cdot 6.6}{110} = \frac{6.6 \big/ \sqrt{3}}{110 \big/ 3}$$

(Equation 11)

3) shows that in this example the first three input channel of the preprocessing block is not connected in SMT tool or ACT tool.

4) shows the connection made in Signal Matrix Tool (SMT), Application configuration tool (ACT), which connect this voltage input to the fourth input channel of the preprocessing function block 5).

5) is a Preprocessing block that has the task to digitally filter the connected analog input and calculate:

- fundamental frequency phasors for all four input channels
- harmonic content for all four input channels
- positive, negative and zero sequence quantities by using the fundamental frequency phasors for the first three input channels (channel one taken as reference for sequence quantities)

These calculated values are then available for all built-in protection and control functions within the IED, which are connected to this preprocessing function block in the configuration tool. For this application most of the preprocessing settings can be left to the default values. If frequency tracking and compensation is required (this feature is typically required only for IEDs installed in the generating stations) then the setting parameters *DFTReference* shall be set accordingly.

Example how to connect the open delta VT to the IED for low impedance grounded or solidly grounded power systems

Figure 19 gives an example about the connection of an open delta VT to the IED for low impedance grounded or solidly grounded power systems. It shall be noted that this type of VT connection presents secondary voltage proportional to $3V_0$ to the IED.

In case of a solid ground fault close to the VT location the primary value of 3Vo will be equal to:

$$3Vo = \frac{V_{Ph-Ph}}{\sqrt{3}} = V_{Ph-Gnd}$$

(Equation 12)

The primary rated voltage of such VT is always equal to VPh-Gnd. Therefore, three series connected VT secondary windings will give the secondary voltage equal only to one individual VT secondary winding rating. Thus the secondary windings of such open delta VTs quite often has a secondary rated voltage close to rated phase-to-phase VT secondary voltage, that is, 115V or 115/√3V as in this particular example. Figure 19 gives an overview of the actions which are needed to make this measurement available to the built-in protection and control functions within the IED.

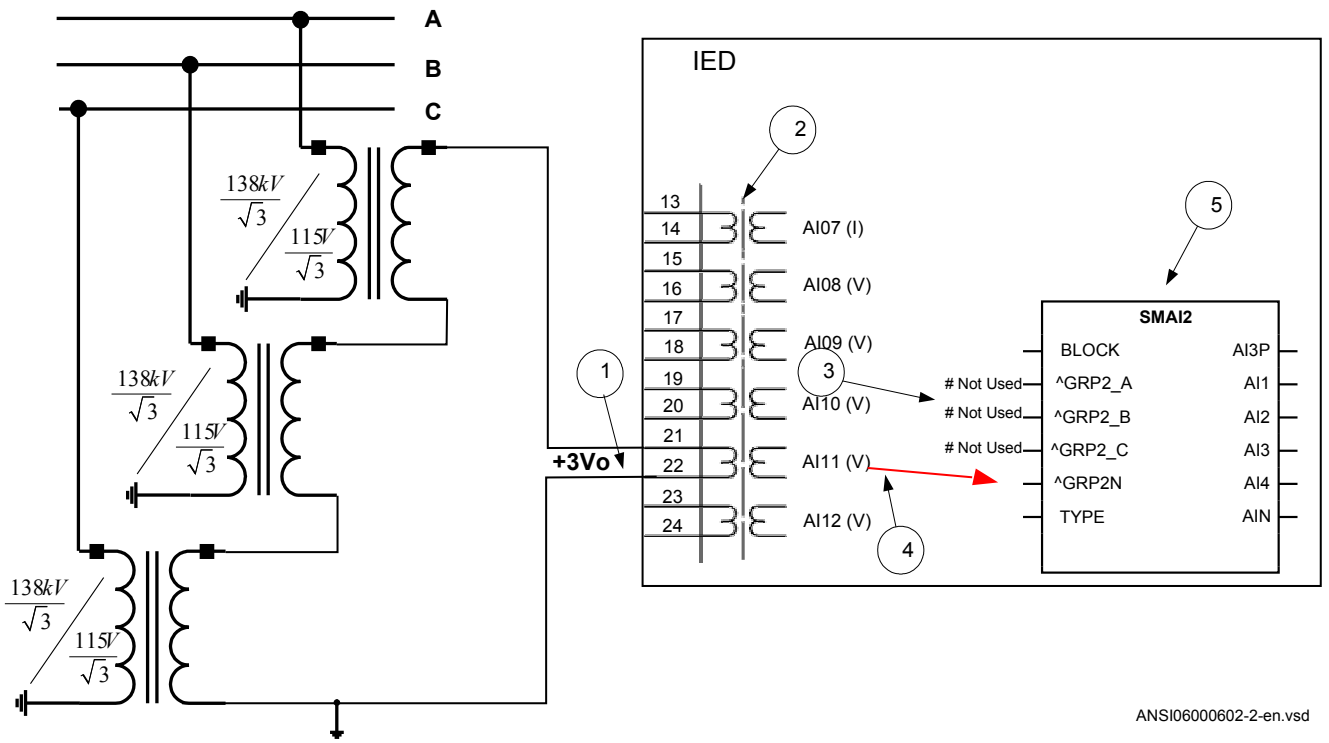

Figure 19: Open delta connected VT in low impedance or solidly grounded power system

Where:

1) shows how to connect the secondary side of open delta VT to one VT input in the IED.

+3Vo shall be connected to the IED.

2) is TRM where this voltage input is located. It shall be noted that for this voltage input the following setting values shall be entered:

$$VTprim = \sqrt{3} \cdot \frac{138}{\sqrt{3}} = 138kV$$

(Equation 13)

$$VT\,\text{sec} = \sqrt{3} \cdot \frac{115}{\sqrt{3}} = 115V$$

(Equation 14)

Inside the IED, only the ratio of these two parameters is used. It shall be noted that the ratio of the entered values exactly corresponds to ratio of one individual open delta VT.

$$\frac{138}{115} = \frac{138/\sqrt{3}}{115/\sqrt{3}}$$

(Equation 15)

3) shows that in this example the first three input channel of the preprocessing block is not connected in SMT tool.

4) shows the connection made in Signal Matrix Tool (SMT), which connect this voltage input to the fourth input channel of the preprocessing function block 4).

5) preprocessing block has a task to digitally filter the connected analog inputs and calculate:

- fundamental frequency phasors for all four input channels
- harmonic content for all four input channels
- positive, negative and zero sequence quantities by using the fundamental frequency phasors for the first three input channels (channel one taken as reference for sequence quantities)

These calculated values are then available for all built-in protection and control functions within the IED, which are connected to this preprocessing function block in the configuration tool. For this application most of the preprocessing settings can be left to the default values.
If frequency tracking and compensation is required (this feature is typically required only for IEDs installed in the generating stations) then the setting parameters *DFTReference* shall be set accordingly.

Example on how to connect a neutral point VT to the IED

Figure 20 gives an example on how to connect a neutral point VT to the IED. This type of VT connection presents secondary voltage proportional to V_0 to the IED.

In case of a solid ground fault in high impedance grounded or ungrounded systems the primary value of V_0 voltage will be equal to:

$$V0 = \frac{V_{ph-ph}}{\sqrt{3}} = V_{ph-Gnd}$$

(Equation 16)

Figure 20 gives an overview of required actions by the user in order to make this measurement available to the built-in protection and control functions within the IED as well.

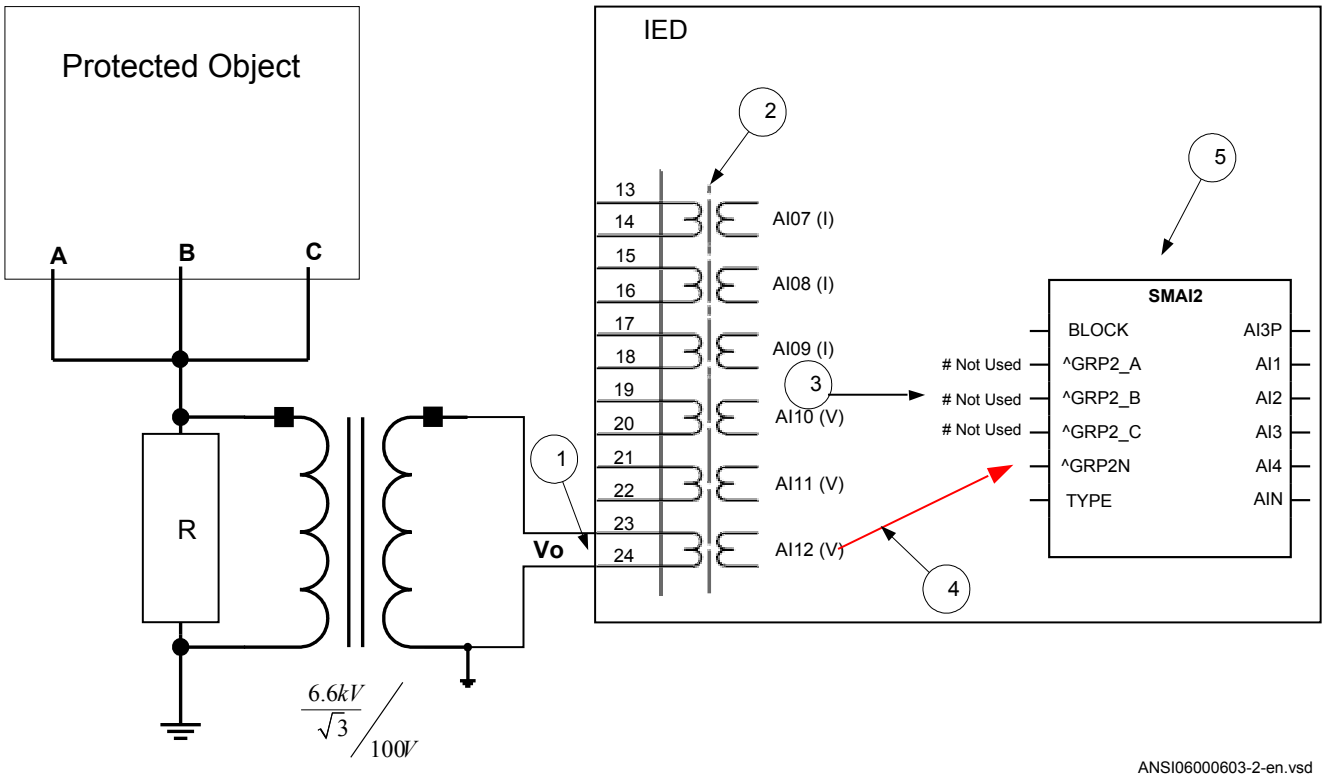

Figure 20: Neutral point connected VT

Where:

1) shows how to connect the secondary side of neutral point VT to one VT input in the IED.

V_0 shall be connected to the IED.

2) is the TRM or AIM where this voltage input is located. For this voltage input the following setting values shall be entered:

$$VTprim = \frac{6.6}{\sqrt{3}} = 3.81kV$$

(Equation 17)

$$VT\,\text{sec} = 100V$$

(Equation 18)

Inside the IED, only the ratio of these two parameters is used. It shall be noted that the ratio of the entered values exactly corresponds to ratio of the neutral point VT.

3) shows that in this example the first three input channel of the preprocessing block is not connected in SMT tool or ACT tool.

4) shows the connection made in Signal Matrix Tool (SMT), Application configuration tool (ACT), which connects this voltage input to the fourth input channel of the preprocessing function block 5).

5) is a preprocessing block that has the task to digitally filter the connected analog inputs and calculate:

- fundamental frequency phasors for all four input channels
- harmonic content for all four input channels
- positive, negative and zero sequence quantities by using the fundamental frequency phasors for the first three input channels (channel one taken as reference for sequence quantities)

These calculated values are then available for all built-in protection and control functions within the IED, which are connected to this preprocessing function block in the configuration tool. For this application most of the preprocessing settings can be left to the default values.
If frequency tracking and compensation is required (this feature is typically required only for IEDs installed in the generating stations) then the setting parameters *DFTReference* shall be set accordingly.

3.2.3 Setting parameters

The available setting parameters related to analog inputs are depending on the actual hardware (TRM) and the logic configuration made in PCM600.

Table 1: AISVBAS Non group settings (basic)

Name	Values (Range)	Unit	Step	Default	Description
PhaseAngleRef	TRM40-Ch1 TRM40-Ch2 TRM40-Ch3 TRM40-Ch4 TRM40-Ch5 TRM40-Ch6 TRM40-Ch7 TRM40-Ch8 TRM40-Ch9 TRM40-Ch10 TRM40-Ch11 TRM40-Ch12 TRM41-Ch1 TRM41-Ch2 TRM41-Ch3 TRM41-Ch4 TRM41-Ch5 TRM41-Ch6 TRM41-Ch7 TRM41-Ch8 TRM41-Ch9 TRM41-Ch10 TRM41-Ch11 TRM41-Ch12 MU1-IA MU1-IB MU1-IC MU1-I0 MU1- VA MU1- VB MU1-VC MU1-V0 MU2-IA MU2-IB MU2-IC MU2-I0 MU2-VA MU2-VB MU2-VC MU2-V0 MU3-IA MU3-IB MU3-IC MU3-I0 MU3-VB MU2-VB MU3-VC MU3-V0	-	-	TRM40-Ch1	Reference channel for phase angle presentation

Table 2: TRM_12I Non group settings (basic)

Name	Values (Range)	Unit	Step	Default	Description
CT_WyePoint1	FromObject ToObject	-	-	ToObject	ToObject= towards protected object, FromObject= the opposite
CTsec1	1 - 10	A	1	1	Rated CT secondary current
CTprim1	1 - 99999	A	1	3000	Rated CT primary current
CT_WyePoint2	FromObject ToObject	-	-	ToObject	ToObject= towards protected object, FromObject= the opposite
CTsec2	1 - 10	A	1	1	Rated CT secondary current
CTprim2	1 - 99999	A	1	3000	Rated CT primary current
CT_WyePoint3	FromObject ToObject	-	-	ToObject	ToObject= towards protected object, FromObject= the opposite
CTsec3	1 - 10	A	1	1	Rated CT secondary current
CTprim3	1 - 99999	A	1	3000	Rated CT primary current
CT_WyePoint4	FromObject ToObject	-	-	ToObject	ToObject= towards protected object, FromObject= the opposite
CTsec4	1 - 10	A	1	1	Rated CT secondary current
CTprim4	1 - 99999	A	1	3000	Rated CT primary current
CT_WyePoint5	FromObject ToObject	-	-	ToObject	ToObject= towards protected object, FromObject= the opposite
CTsec5	1 - 10	A	1	1	Rated CT secondary current
CTprim5	1 - 99999	A	1	3000	Rated CT primary current
CT_WyePoint6	FromObject ToObject	-	-	ToObject	ToObject= towards protected object, FromObject= the opposite
CTsec6	1 - 10	A	1	1	Rated CT secondary current
CTprim6	1 - 99999	A	1	3000	Rated CT primary current
CT_WyePoint7	FromObject ToObject	-	-	ToObject	ToObject= towards protected object, FromObject= the opposite
CTsec7	1 - 10	A	1	1	Rated CT secondary current
CTprim7	1 - 99999	A	1	3000	Rated CT primary current
CT_WyePoint8	FromObject ToObject	-	-	ToObject	ToObject= towards protected object, FromObject= the opposite
CTsec8	1 - 10	A	1	1	Rated CT secondary current
CTprim8	1 - 99999	A	1	3000	Rated CT primary current
CT_WyePoint9	FromObject ToObject	-	-	ToObject	ToObject= towards protected object, FromObject= the opposite
CTsec9	1 - 10	A	1	1	Rated CT secondary current
CTprim9	1 - 99999	A	1	3000	Rated CT primary current
CT_WyePoint10	FromObject ToObject	-	-	ToObject	ToObject= towards protected object, FromObject= the opposite
CTsec10	1 - 10	A	1	1	Rated CT secondary current

Table continues on next page

Name	Values (Range)	Unit	Step	Default	Description
CTprim10	1 - 99999	A	1	3000	Rated CT primary current
CT_WyePoint11	FromObject ToObject	-	-	ToObject	ToObject= towards protected object, FromObject= the opposite
CTsec11	1 - 10	A	1	1	Rated CT secondary current
CTprim11	1 - 99999	A	1	3000	Rated CT primary current
CT_WyePoint12	FromObject ToObject	-	-	ToObject	ToObject= towards protected object, FromObject= the opposite
CTsec12	1 - 10	A	1	1	Rated CT secondary current
CTprim12	1 - 99999	A	1	3000	Rated CT primary current

Table 3: TRM_6I_6U Non group settings (basic)

Name	Values (Range)	Unit	Step	Default	Description
CT_WyePoint1	FromObject ToObject	-	-	ToObject	ToObject= towards protected object, FromObject= the opposite
CTsec1	1 - 10	A	1	1	Rated CT secondary current
CTprim1	1 - 99999	A	1	3000	Rated CT primary current
CT_WyePoint2	FromObject ToObject	-	-	ToObject	ToObject= towards protected object, FromObject= the opposite
CTsec2	1 - 10	A	1	1	Rated CT secondary current
CTprim2	1 - 99999	A	1	3000	Rated CT primary current
CT_WyePoint3	FromObject ToObject	-	-	ToObject	ToObject= towards protected object, FromObject= the opposite
CTsec3	1 - 10	A	1	1	Rated CT secondary current
CTprim3	1 - 99999	A	1	3000	Rated CT primary current
CT_WyePoint4	FromObject ToObject	-	-	ToObject	ToObject= towards protected object, FromObject= the opposite
CTsec4	1 - 10	A	1	1	Rated CT secondary current
CTprim4	1 - 99999	A	1	3000	Rated CT primary current
CT_WyePoint5	FromObject ToObject	-	-	ToObject	ToObject= towards protected object, FromObject= the opposite
CTsec5	1 - 10	A	1	1	Rated CT secondary current
CTprim5	1 - 99999	A	1	3000	Rated CT primary current
CT_WyePoint6	FromObject ToObject	-	-	ToObject	ToObject= towards protected object, FromObject= the opposite
CTsec6	1 - 10	A	1	1	Rated CT secondary current
CTprim6	1 - 99999	A	1	3000	Rated CT primary current
VTsec7	0.001 - 999.999	V	0.001	110.000	Rated VT secondary voltage
VTprim7	0.05 - 2000.00	kV	0.05	400.00	Rated VT primary voltage
VTsec8	0.001 - 999.999	V	0.001	110.000	Rated VT secondary voltage

Table continues on next page

Name	Values (Range)	Unit	Step	Default	Description
VTprim8	0.05 - 2000.00	kV	0.05	400.00	Rated VT primary voltage
VTsec9	0.001 - 999.999	V	0.001	110.000	Rated VT secondary voltage
VTprim9	0.05 - 2000.00	kV	0.05	400.00	Rated VT primary voltage
VTsec10	0.001 - 999.999	V	0.001	110.000	Rated VT secondary voltage
VTprim10	0.05 - 2000.00	kV	0.05	400.00	Rated VT primary voltage
VTsec11	0.001 - 999.999	V	0.001	110.000	Rated VT secondary voltage
VTprim11	0.05 - 2000.00	kV	0.05	400.00	Rated VT primary voltage
VTsec12	0.001 - 999.999	V	0.001	110.000	Rated VT secondary voltage
VTprim12	0.05 - 2000.00	kV	0.05	400.00	Rated VT primary voltage

Table 4: TRM_7I_5U Non group settings (basic)

Name	Values (Range)	Unit	Step	Default	Description
CT_WyePoint1	FromObject ToObject	-	-	ToObject	ToObject= towards protected object, FromObject= the opposite
CTsec1	1 - 10	A	1	1	Rated CT secondary current
CTprim1	1 - 99999	A	1	3000	Rated CT primary current
CT_WyePoint2	FromObject ToObject	-	-	ToObject	ToObject= towards protected object, FromObject= the opposite
CTsec2	1 - 10	A	1	1	Rated CT secondary current
CTprim2	1 - 99999	A	1	3000	Rated CT primary current
CT_WyePoint3	FromObject ToObject	-	-	ToObject	ToObject= towards protected object, FromObject= the opposite
CTsec3	1 - 10	A	1	1	Rated CT secondary current
CTprim3	1 - 99999	A	1	3000	Rated CT primary current
CT_WyePoint4	FromObject ToObject	-	-	ToObject	ToObject= towards protected object, FromObject= the opposite
CTsec4	1 - 10	A	1	1	Rated CT secondary current
CTprim4	1 - 99999	A	1	3000	Rated CT primary current
CT_WyePoint5	FromObject ToObject	-	-	ToObject	ToObject= towards protected object, FromObject= the opposite
CTsec5	1 - 10	A	1	1	Rated CT secondary current
CTprim5	1 - 99999	A	1	3000	Rated CT primary current
CT_WyePoint6	FromObject ToObject	-	-	ToObject	ToObject= towards protected object, FromObject= the opposite
CTsec6	1 - 10	A	1	1	Rated CT secondary current
CTprim6	1 - 99999	A	1	3000	Rated CT primary current
CT_WyePoint7	FromObject ToObject	-	-	ToObject	ToObject= towards protected object, FromObject= the opposite

Table continues on next page

Name	Values (Range)	Unit	Step	Default	Description
CTsec7	1 - 10	A	1	1	Rated CT secondary current
CTprim7	1 - 99999	A	1	3000	Rated CT primary current
VTsec8	0.001 - 999.999	V	0.001	110.000	Rated VT secondary voltage
VTprim8	0.05 - 2000.00	kV	0.05	400.00	Rated VT primary voltage
VTsec9	0.001 - 999.999	V	0.001	110.000	Rated VT secondary voltage
VTprim9	0.05 - 2000.00	kV	0.05	400.00	Rated VT primary voltage
VTsec10	0.001 - 999.999	V	0.001	110.000	Rated VT secondary voltage
VTprim10	0.05 - 2000.00	kV	0.05	400.00	Rated VT primary voltage
VTsec11	0.001 - 999.999	V	0.001	110.000	Rated VT secondary voltage
VTprim11	0.05 - 2000.00	kV	0.05	400.00	Rated VT primary voltage
VTsec12	0.001 - 999.999	V	0.001	110.000	Rated VT secondary voltage
VTprim12	0.05 - 2000.00	kV	0.05	400.00	Rated VT primary voltage

Table 5: TRM_9I_3U Non group settings (basic)

Name	Values (Range)	Unit	Step	Default	Description
CT_WyePoint1	FromObject ToObject	-	-	ToObject	ToObject= towards protected object, FromObject= the opposite
CTsec1	1 - 10	A	1	1	Rated CT secondary current
CTprim1	1 - 99999	A	1	3000	Rated CT primary current
CT_WyePoint2	FromObject ToObject	-	-	ToObject	ToObject= towards protected object, FromObject= the opposite
CTsec2	1 - 10	A	1	1	Rated CT secondary current
CTprim2	1 - 99999	A	1	3000	Rated CT primary current
CT_WyePoint3	FromObject ToObject	-	-	ToObject	ToObject= towards protected object, FromObject= the opposite
CTsec3	1 - 10	A	1	1	Rated CT secondary current
CTprim3	1 - 99999	A	1	3000	Rated CT primary current
CT_WyePoint4	FromObject ToObject	-	-	ToObject	ToObject= towards protected object, FromObject= the opposite
CTsec4	1 - 10	A	1	1	Rated CT secondary current
CTprim4	1 - 99999	A	1	3000	Rated CT primary current
CT_WyePoint5	FromObject ToObject	-	-	ToObject	ToObject= towards protected object, FromObject= the opposite
CTsec5	1 - 10	A	1	1	Rated CT secondary current
CTprim5	1 - 99999	A	1	3000	Rated CT primary current
CT_WyePoint6	FromObject ToObject	-	-	ToObject	ToObject= towards protected object, FromObject= the opposite
CTsec6	1 - 10	A	1	1	Rated CT secondary current

Table continues on next page

Name	Values (Range)	Unit	Step	Default	Description
CTprim6	1 - 99999	A	1	3000	Rated CT primary current
CT_WyePoint7	FromObject ToObject	-	-	ToObject	ToObject= towards protected object, FromObject= the opposite
CTsec7	1 - 10	A	1	1	Rated CT secondary current
CTprim7	1 - 99999	A	1	3000	Rated CT primary current
CT_WyePoint8	FromObject ToObject	-	-	ToObject	ToObject= towards protected object, FromObject= the opposite
CTsec8	1 - 10	A	1	1	Rated CT secondary current
CTprim8	1 - 99999	A	1	3000	Rated CT primary current
CT_WyePoint9	FromObject ToObject	-	-	ToObject	ToObject= towards protected object, FromObject= the opposite
CTsec9	1 - 10	A	1	1	Rated CT secondary current
CTprim9	1 - 99999	A	1	3000	Rated CT primary current
VTsec10	0.001 - 999.999	V	0.001	110.000	Rated VT secondary voltage
VTprim10	0.05 - 2000.00	kV	0.05	400.00	Rated VT primary voltage
VTsec11	0.001 - 999.999	V	0.001	110.000	Rated VT secondary voltage
VTprim11	0.05 - 2000.00	kV	0.05	400.00	Rated VT primary voltage
VTsec12	0.001 - 999.999	V	0.001	110.000	Rated VT secondary voltage
VTprim12	0.05 - 2000.00	kV	0.05	400.00	Rated VT primary voltage

3.3 Local human-machine interface

3.3.1 Human machine interface

The local human machine interface is available in a medium sized model. Up to 12 single line diagram pages can be defined, depending on the product capability.

The local HMI is divided into zones with different functionality.

- Status indication LEDs.
- Alarm indication LEDs, which consist of 15 LEDs (6 red and 9 yellow) with user printable label. All LEDs are configurable from PCM600.
- Liquid crystal display (LCD).
- Keypad with push buttons for control and navigation purposes, switch for selection between local and remote control and reset.
- Isolated RJ45 communication port.

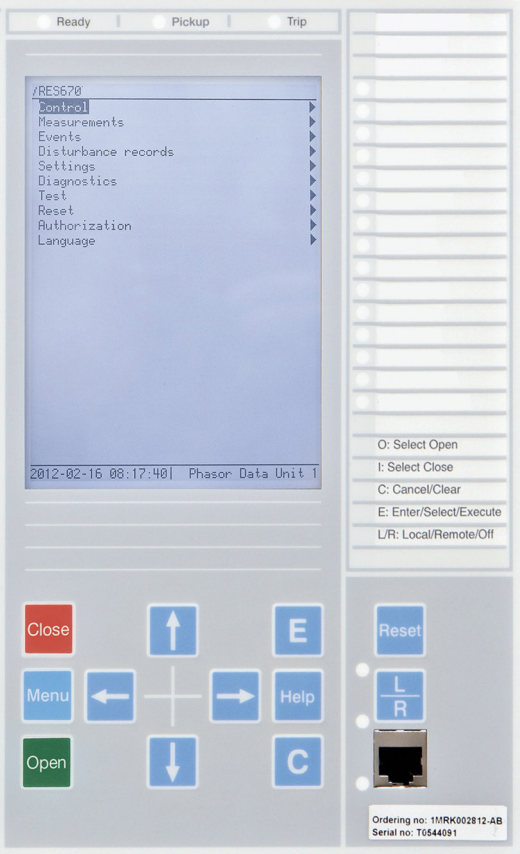

Figure 21: Example of medium graphic HMI

3.3.2 Local HMI related functions

3.3.2.1 Introduction

The local HMI can be adapted to the application configuration and to user preferences.

- Function block LocalHMI
- Function block LEDGEN
- Setting parameters

3.3.2.2 General setting parameters

Table 6: SCREEN Non group settings (basic)

Name	Values (Range)	Unit	Step	Default	Description
Language	English OptionalLanguage	-	-	English	Local HMI language
DisplayTimeout	10 - 120	Min	10	60	Local HMI display timeout
AutoRepeat	Disabled Enabled	-	-	Enabled	Activation of auto-repeat (On) or not (Off)
ContrastLevel	-10 - 20	%	1	0	Contrast level for display
DefaultScreen	0 - 0	-	1	0	Default screen
EvListSrtOrder	Latest on top Oldest on top	-	-	Latest on top	Sort order of event list
SymbolFont	IEC ANSI	-	-	IEC	Symbol font for Single Line Diagram

3.3.3 Indication LEDs

3.3.3.1 Introduction

The function block LEDGEN controls and supplies information about the status of the indication LEDs. The input and output signals of LEDGEN are configured with PCM600. The input signal for each LED is selected individually with the Signal Matrix Tool in PCM600.

- LEDs (number 1–6) for trip indications are red.
- LEDs (number 7–15) for pickup indications are yellow.

Each indication LED on the local HMI can be set individually to operate in six different sequences

- Two sequences operate as follow type.
- Four sequences operate as latch type.
  - Two of the latching sequence types are intended to be used as a protection indication system, either in collecting or restarting mode, with reset functionality.
  - Two of the latching sequence types are intended to be used as signaling system in collecting (coll) mode with an acknowledgment functionality.

The light from the LEDs can be steady (-S) or flashing (-F). See the technical reference manual for more information.

3.3.3.2 Setting parameters

Table 7: LEDGEN Non group settings (basic)

Name	Values (Range)	Unit	Step	Default	Description
Operation	Disabled Enabled	-	-	Disabled	Operation mode for the LED function
tRestart	0.0 - 100.0	s	0.1	0.0	Defines the disturbance length
tMax	0.0 - 100.0	s	0.1	0.0	Maximum time for the definition of a disturbance
SeqTypeLED1	Follow-S Follow-F LatchedAck-F-S LatchedAck-S-F LatchedColl-S LatchedReset-S	-	-	Follow-S	Sequence type for LED 1
SeqTypeLED2	Follow-S Follow-F LatchedAck-F-S LatchedAck-S-F LatchedColl-S LatchedReset-S	-	-	Follow-S	Sequence type for LED 2
SeqTypeLED3	Follow-S Follow-F LatchedAck-F-S LatchedAck-S-F LatchedColl-S LatchedReset-S	-	-	Follow-S	Sequence type for LED 3
SeqTypeLED4	Follow-S Follow-F LatchedAck-F-S LatchedAck-S-F LatchedColl-S LatchedReset-S	-	-	Follow-S	Sequence type for LED 4
SeqTypeLED5	Follow-S Follow-F LatchedAck-F-S LatchedAck-S-F LatchedColl-S LatchedReset-S	-	-	Follow-S	Sequence type for LED 5
SeqTypeLED6	Follow-S Follow-F LatchedAck-F-S LatchedAck-S-F LatchedColl-S LatchedReset-S	-	-	Follow-S	Sequence type for LED 6
SeqTypeLED7	Follow-S Follow-F LatchedAck-F-S LatchedAck-S-F LatchedColl-S LatchedReset-S	-	-	Follow-S	Sequence type for LED 7

Table continues on next page

Name	Values (Range)	Unit	Step	Default	Description
SeqTypeLED8	Follow-S Follow-F LatchedAck-F-S LatchedAck-S-F LatchedColl-S LatchedReset-S	-	-	Follow-S	sequence type for LED 8
SeqTypeLED9	Follow-S Follow-F LatchedAck-F-S LatchedAck-S-F LatchedColl-S LatchedReset-S	-	-	Follow-S	Sequence type for LED 9
SeqTypeLED10	Follow-S Follow-F LatchedAck-F-S LatchedAck-S-F LatchedColl-S LatchedReset-S	-	-	Follow-S	Sequence type for LED 10
SeqTypeLED11	Follow-S Follow-F LatchedAck-F-S LatchedAck-S-F LatchedColl-S LatchedReset-S	-	-	Follow-S	Sequence type for LED 11
SeqTypeLED12	Follow-S Follow-F LatchedAck-F-S LatchedAck-S-F LatchedColl-S LatchedReset-S	-	-	Follow-S	Sequence type for LED 12
SeqTypeLED13	Follow-S Follow-F LatchedAck-F-S LatchedAck-S-F LatchedColl-S LatchedReset-S	-	-	Follow-S	Sequence type for LED 13
SeqTypeLED14	Follow-S Follow-F LatchedAck-F-S LatchedAck-S-F LatchedColl-S LatchedReset-S	-	-	Follow-S	Sequence type for LED 14
SeqTypeLED15	Follow-S Follow-F LatchedAck-F-S LatchedAck-S-F LatchedColl-S LatchedReset-S	-	-	Follow-S	Sequence type for LED 15

3.4 Basic IED functions

3.4.1 Self supervision with internal event list

3.4.1.1 Application

The protection and control IEDs have many functions included . The included self-supervision with internal event list function block provides good supervision of the IED. The fault signals make it easier to analyze and locate a fault.

Both hardware and software supervision is included and it is also possible to indicate possible faults through a hardware contact on the power supply module and/or through the software communication.

Internal events are generated by the built-in supervisory functions. The supervisory functions supervise the status of the various modules in the IED and, in case of failure, a corresponding event is generated. Similarly, when the failure is corrected, a corresponding event is generated.

Apart from the built-in supervision of the various modules, events are also generated when the status changes for the:

- built-in real time clock (in operation/out of order).
- external time synchronization (in operation/out of order).

Events are also generated:

- whenever any setting in the IED is changed.

The internal events are time tagged with a resolution of 1 ms and stored in a list. The list can store up to 40 events. The list is based on the FIFO principle, that is, when it is full, the oldest event is overwritten. The list contents cannot be modified, but the whole list can be cleared using the Reset menu in the LHMI.

The list of internal events provides valuable information, which can be used during commissioning and fault tracing.

The information can only be retrieved with the aid of PCM600 Event Monitoring Tool. The PC can either be connected to the front port, or to the port at the back of the IED.

3.4.1.2 Setting parameters

The function does not have any parameters available in the local HMI or PCM600.

3.4.2 Time synchronization

3.4.2.1 Application

Use time synchronization to achieve a common time base for the IEDs in a protection and control system. This makes it possible to compare events and disturbance data between all IEDs in the system.

Time-tagging of internal events and disturbances are an excellent help when evaluating faults. Without time synchronization, only the events within the IED can be compared to one another. With time synchronization, events and disturbances within the entire station, and even between line ends, can be compared at evaluation.

In the IED, the internal time can be synchronized from a number of sources:

- BIN (Binary Minute Pulse)
- GPS
- SNTP
- IRIG-B
- PPS

The setting tells the IED which of these that shall be used to synchronize the IED.

It is possible to set a backup time-source for GPS signal, for instance SNTP. In this case, when the GPS signal quality is bad, the IED will automatically choose SNTP as the time-source. At a given point in time, only one time-source will be used.

3.4.2.2 Setting guidelines

System time

The time is set with years, month, day, hour, minute, second and millisecond.

Synchronization

The setting parameters for the real-time clock with external time synchronization (TIME) are set via local HMI or PCM600.

TimeSynch

When the source of the time synchronization is selected on the local HMI, the parameter is called *TimeSynch*. The time synchronization source can also be set from PCM600. The setting alternatives are:

FineSyncSource which can have the following values:

- *Disabled*
- *SPA*
- *LON*
- *BIN* (Binary Minute Pulse)
- *GPS*
- *GPS+SPA*
- *GPS+LON*
- *GPS+BIN*
- *SNTP*
- *GPS+SNTP*
- *GPS+IRIG-B*
- *IRIG-B*
- *PPS*

GPS, *SNTP* and *IRIG-B* are the only values of *FineSyncSource* used in RES670.

CoarseSyncSrc which can have the following values:

- *Disabled*
- *SPA*
- *LON*
- *SNTP*
- *DNP*

CoarseSyncSrc which can have the following values:

-
- *SNTP*
- *DNP*
- *IEC60870-5-103*

SNTP is the only value of *CoarseSyncSrc* used in RES670.

The function input to be used for minute-pulse synchronization is called TIME-MINSYNC.

The system time can be set manually, either via the local HMI or via any of the communication ports. The time synchronization fine tunes the clock (seconds and milliseconds).

The parameter *SyncMaster* defines if the IED is a master, or not a master for time synchronization in a system of IEDs connected in a communication network (IEC61850-8-1). The *SyncMaster* can have the following values:

- *Disabled*
- *SNTP -Server*

Set the course time synchronizing source (*CoarseSyncSrc*) to *Disabled* when GPS time synchronization of line differential function is used. Set the fine time synchronization source (*FineSyncSource*) to *GPS*. The GPS will thus provide the complete time synchronization. GPS alone shall synchronize the analogue values in such systems.

3.4.2.3 Setting parameters

Path in the local HMI is located under **Main menu/Setting/Time**

Path in PCM600 is located under **Main menu/Settings/Time/Synchronization**

Table 8: SYNCHBIN Non group settings (basic)

Name	Values (Range)	Unit	Step	Default	Description
ModulePosition	3 - 16	-	1	3	Hardware position of IO module for time synchronization
BinaryInput	1 - 16	-	1	1	Binary input number for time synchronization
BinDetection	PositiveEdge NegativeEdge	-	-	PositiveEdge	Positive or negative edge detection

Table 9: SYNCHSNTP Non group settings (basic)

Name	Values (Range)	Unit	Step	Default	Description
ServerIP-Add	0 - 18	IP Address	1	0.0.0.0	Server IP-address
RedServIP-Add	0 - 18	IP Address	1	0.0.0.0	Redundant server IP-address

Table 10: DSTBEGIN Non group settings (basic)

Name	Values (Range)	Unit	Step	Default	Description
MonthInYear	January February March April May June July August September October November December	-	-	March	Month in year when daylight time starts
DayInWeek	Sunday Monday Tuesday Wednesday Thursday Friday Saturday	-	-	Sunday	Day in week when daylight time starts
WeekInMonth	Last First Second Third Fourth	-	-	Last	Week in month when daylight time starts
UTCTimeOfDay	0 - 172800	s	1	3600	UTC Time of day in seconds when daylight time starts

Table 11: DSTEND Non group settings (basic)

Name	Values (Range)	Unit	Step	Default	Description
MonthInYear	January February March April May June July August September October November December	-	-	October	Month in year when daylight time ends
DayInWeek	Sunday Monday Tuesday Wednesday Thursday Friday Saturday	-	-	Sunday	Day in week when daylight time ends
WeekInMonth	Last First Second Third Fourth	-	-	Last	Week in month when daylight time ends
UTCTimeOfDay	0 - 172800	s	1	3600	UTC Time of day in seconds when daylight time ends

Table 12: TIMEZONE Non group settings (basic)

Name	Values (Range)	Unit	Step	Default	Description
NoHalfHourUTC	-24 - 24	-	1	0	Number of half-hours from UTC

Table 13: SYNCHIRIG-B Non group settings (basic)

Name	Values (Range)	Unit	Step	Default	Description
SynchType	BNC Opto	-	-	Opto	Type of synchronization
TimeDomain	LocalTime UTC	-	-	LocalTime	Time domain
Encoding	IRIG-B 1344 1344TZ	-	-	IRIG-B	Type of encoding
TimeZoneAs1344	MinusTZ PlusTZ	-	-	PlusTZ	Time zone as in 1344 standard

3.4.3 Parameter setting groups

3.4.3.1 Application

Six sets of settings are available to optimize IED operation for different power system conditions. By creating and switching between fine tuned setting sets, either from the local HMI or configurable binary inputs, results in a highly adaptable IED that can cope with a variety of power system scenarios.

Different conditions in networks with different voltage levels require highly adaptable protection and control units to best provide for dependability, security and selectivity requirements. Protection units operate with a higher degree of availability, especially, if the setting values of their parameters are continuously optimized according to the conditions in the power system.

Operational departments can plan for different operating conditions in the primary equipment. The protection engineer can prepare the necessary optimized and pre-tested settings in advance for different protection functions. Six

A function block, SETGRPS, defines how many setting groups are used. Setting is done with parameter *MAXSETGR* and shall be set to the required value for each IED. Only the number of setting groups set will be available in the Parameter Setting tool for activation with the ActiveGroup function block.

3.4.3.2 Setting guidelines

The setting *ActiveSetGrp*, is used to select which parameter group to be active. The active group can also be selected with configured input to the function block SETGRPS.

The length of the pulse, sent out by the output signal GRP_CHGD when an active group has changed, is set with the parameter *t*.

The parameter *MAXSETGR* defines the maximum number of setting groups in use to switch between. Only the selected number of setting groups will be available in the Parameter Setting tool (PST) for activation with the ActiveGroup function block.

3.4.3.3 Setting parameters

Table 14: ActiveGroup Non group settings (basic)

Name	Values (Range)	Unit	Step	Default	Description
t	0.0 - 10.0	s	0.1	1.0	Pulse length of pulse when setting changed

Table 15: SETGRPS Non group settings (basic)

Name	Values (Range)	Unit	Step	Default	Description
ActiveSetGrp	SettingGroup1 SettingGroup2 SettingGroup3 SettingGroup4 SettingGroup5 SettingGroup6	-	-	SettingGroup1	ActiveSettingGroup
MAXSETGR	1 - 6	No	1	1	Max number of setting groups 1-6

3.4.4 Test mode functionality TEST

3.4.4.1 Setting parameters

Table 16: TESTMODE Non group settings (basic)

Name	Values (Range)	Unit	Step	Default	Description
TestMode	Disabled Enabled	-	-	Disabled	Test mode in operation (Enabled) or not (Disabled)
EventDisable	Disabled Enabled	-	-	Disabled	Event disable during testmode
CmdTestBit	Disabled Enabled	-	-	Disabled	Command bit for test required or not during testmode

3.4.5 Change lock CHNGLCK

3.4.5.1 Application

Change lock function CHNGLCK is used to block further changes to the IED configuration once the commissioning is complete. The purpose is to make it impossible to perform inadvertent IED configuration and setting changes.

However, when activated, CHNGLCK will still allow the following actions that does not involve reconfiguring of the IED:

- Monitoring
- Reading events
- Resetting events
- Reading disturbance data
- Clear disturbances
- Reset LEDs
- Reset counters and other runtime component states

- Control operations
- Set system time
- Enter and exit from test mode
- Change of active setting group

The binary input controlling the function is defined in ACT or SMT. The CHNGLCK function is configured using ACT.

LOCK	Binary input signal that will activate/deactivate the function, defined in ACT or SMT.

When CHNGLCK has a logical one on its input, then all attempts to modify the IED configuration and setting will be denied and the message "Error: Changes blocked" will be displayed on the local HMI; in PCM600 the message will be "Operation denied by active ChangeLock". The CHNGLCK function should be configured so that it is controlled by a signal from a binary input card. This guarantees that by setting that signal to a logical zero, CHNGLCK is deactivated. If any logic is included in the signal path to the CHNGLCK input, that logic must be designed so that it cannot permanently issue a logical one to the CHNGLCK input. If such a situation would occur in spite of these precautions, then please contact the local ABB representative for remedial action.

3.4.5.2 Setting parameters

Table 17: CHNGLCK Non group settings (basic)

Name	Values (Range)	Unit	Step	Default	Description
Operation	LockHMI and Com LockHMI, EnableCom EnableHMI, LockCom	-	-	LockHMI and Com	Operation mode of change lock

3.4.6 IED identifiers

3.4.6.1 Application

IED identifiers (TERMINALID) function allows the user to identify the individual IED in the system, not only in the substation, but in a whole region or a country.

Use only characters A-Z, a-z and 0-9 in station, object and unit names.

3.4.6.2 Setting parameters

Table 18: TERMINALID Non group settings (basic)

Name	Values (Range)	Unit	Step	Default	Description
StationName	0 - 18	-	1	Station name	Station name
StationNumber	0 - 99999	-	1	0	Station number
ObjectName	0 - 18	-	1	Object name	Object name
ObjectNumber	0 - 99999	-	1	0	Object number
UnitName	0 - 18	-	1	Unit name	Unit name
UnitNumber	0 - 99999	-	1	0	Unit number

3.4.7 Product information

3.4.7.1 Application

The Product identifiers function identifies the IED. The function has seven pre-set, settings that are unchangeable but nevertheless very important:

- IEDProdType
- ProductDef
- FirmwareVer
- SerialNo
- OrderingNo
- ProductionDate

The settings are visible on the local HMI , under **Main menu/Diagnostics/IED status/ Product identifiers**

They are very helpful in case of support process (such as repair or maintenance).

3.4.7.2 Setting parameters

The function does not have any parameters available in the local HMI or PCM600.

Factory defined settings

The factory defined settings are very useful for identifying a specific version and very helpful in the case of maintenance, repair, interchanging IEDs between different Substation Automation Systems and upgrading. The factory made settings can not be changed by the customer. They can only be viewed. The settings are found in the local HMI under **Main menu/Diagnostics/IED status/Product identifiers**

The following identifiers are available:

- IEDProdType
  - Describes the type of the IED (like REL, REC or RET). Example: *REL670*
- FirmwareVer
  - Describes the firmware version. Example: *1.4.51*
  - Firmware versions numbers are “running” independently from the release production numbers. For every release numbers (like *1.5.0.17*) there can be one or more firmware versions, depending on the small issues corrected in between releases.
- IEDMainFunType
  - Main function type code according to IEC 60870-5-103. Example: 128 (meaning line protection).
- SerialNo
- OrderingNo
- ProductionDate

3.4.8 Rated system frequency PRIMVAL

3.4.8.1 Application

The rated system frequency is set under **Main menu/General settings/ Power system/ Primary Values** in the local HMI and PCM600 parameter setting tree.

3.4.8.2 Setting guidelines

Set the system rated frequency. Refer to section "Signal matrix for analog inputs SMAI" for description on frequency tracking.

3.4.8.3 Setting parameters

Table 19: PRIMVAL Non group settings (basic)

Name	Values (Range)	Unit	Step	Default	Description
Frequency	50.0 - 60.0	Hz	10.0	50.0	Rated system frequency

3.4.9 Signal matrix for binary inputs SMBI

3.4.9.1 Application

The Signal matrix for binary inputs function SMBI is used within the Application Configuration tool in direct relation with the Signal Matrix tool. SMBI represents the way binary inputs are brought in for one IED configuration.

3.4.9.2 Setting guidelines

There are no setting parameters for the Signal matrix for binary inputs SMBI available to the user in Parameter Setting tool. However, the user shall give a name to SMBI instance and the SMBI inputs, directly in the Application Configuration tool. These names will define SMBI function in the Signal Matrix tool. The user defined name for the input or output signal will also appear on the respective output or input signal.

3.4.9.3 Setting parameters

The function does not have any parameters available in local HMI or PCM600.

3.4.10 Signal matrix for binary outputs SMBO

3.4.10.1 Application

The Signal matrix for binary outputs function SMBO is used within the Application Configuration tool in direct relation with the Signal Matrix tool. SMBO represents the way binary outputs are sent from one IED configuration.

It is important that SMBO inputs are connected when SMBOs are connected to physical outputs through the Signal Matrix Tool. If SMBOs are connected (in SMT) but their inputs not, all the physical outputs will be set by default. This might cause malfunction of primary equipment and/or injury to personnel.

3.4.10.2 Setting guidelines

There are no setting parameters for the Signal matrix for binary outputs SMBO available to the user in Parameter Setting tool. However, the user must give a name to SMBO instance and SMBO outputs, directly in the Application Configuration tool. These names will define SMBO function in the Signal Matrix tool.

3.4.10.3 Setting parameters

The function does not have any parameters available in local HMI or PCM600.

3.4.11 Signal matrix for mA inputs SMMI

3.4.11.1 Application

The Signal matrix for mA inputs function SMMI is used within the Application Configuration tool in direct relation with the Signal Matrix tool. SMMI represents the way milliamp (mA) inputs are brought in for one IED configuration.

3.4.11.2 Setting guidelines

There are no setting parameters for the Signal matrix for mA inputs SMMI available to the user in the Parameter Setting tool. However, the user must give a name to SMMI instance and SMMI inputs, directly in the Application Configuration tool.

3.4.11.3 Setting parameters

The function does not have any parameters available in the local HMI or PCM600.

3.4.12 Signal matrix for analog inputs SMAI

3.4.12.1 Application

Signal matrix for analog inputs function (SMAI), also known as the preprocessor function, processes the analog signals connected to it and gives information about all aspects of the analog signals connected, like the RMS value, phase angle, frequency, harmonic content, sequence components and so on. This information is then used by the respective functions in ACT (for example protection, measurement or monitoring).

The SMAI function is used within PCM600 in direct relation with the Signal Matrix tool or the Application Configuration tool.

3.4.12.2 Frequency values

The frequency functions includes a functionality based on level of positive sequence voltage, *IntBlockLevel*, to validate if the frequency measurement is valid or not. If positive sequence voltage is lower than *IntBlockLevel* the function is blocked. *IntBlockLevel*, is set in % of *VBase*/√3

If SMAI setting *ConnectionType* is *Ph-Ph* at least two of the inputs GRPx_A, GRPx_B and GRPx_C must be connected in order to calculate positive sequence voltage. If SMAI setting *ConnectionType* is *Ph-N*, all three inputs GRPx_A, GRPx_B and GRPx_C must be connected in order to calculate positive sequence voltage.

If only one phase-phase voltage is available and SMAI setting *ConnectionType* is *Ph-Ph* the user is advised to connect two (not three) of the inputs GRPx_A, GRPx_B and GRPx_C to the same voltage input as shown in figure 22 to make SMAI calculating a positive sequence voltage (that is input voltage/√3).

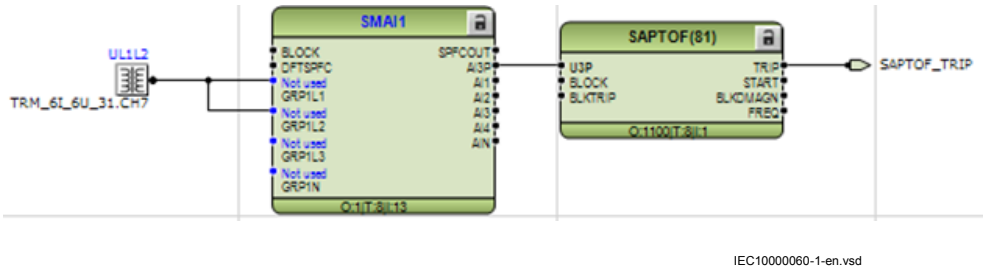

Figure 22: Connection example

The above described scenario does not work if SMAI setting *ConnectionType* is *Ph-N*. If only one phase-ground voltage is available, the same type of connection can be used but the SMAI *ConnectionType* setting must still be *Ph-Ph* and this has to be accounted for when setting *IntBlockLevel*. If SMAI setting *ConnectionType* is *Ph-N* and the same voltage is connected to all three SMAI inputs, the positive sequence voltage will be zero and the frequency functions will not work properly.

The outputs from the above configured SMAI block shall only be used for Overfrequency protection (SAPTOF, 81), Underfrequency protection (SAPTUF, 81) and Rate-of-change frequency protection (SAPFRC, 81) due to that all other information except frequency and positive sequence voltage might be wrongly calculated.

3.4.12.3 Setting guidelines

The parameters for the signal matrix for analog inputs (SMAI) functions are set via the local HMI or PCM600.

Every SMAI function block can receive four analog signals (three phases and one neutral value), either voltage or current. SMAI outputs give information about every aspect of the 3ph analog signals acquired (phase angle, RMS value, frequency and frequency derivates, and so on – 244 values in total). Besides the block “group name”, the analog inputs type (voltage or current) and the analog input names that can be set directly in ACT.

Instantaneous protection function with a 3 ms cycle time, needs to be connected to the processing SMAI function block, which is also running at 3 ms task cycle. In addition, logic function blocks used with these fast cycle protection functions need to have 3 ms task cycle. Same procedure needs to be followed for each cycle time.

DFTRefExtOut: Parameter valid only for function block SMAI1 .

Reference block for external output (SPFCOUT function output).

DFTReference: Reference DFT for the block.

These DFT reference block settings decide DFT reference for DFT calculations. The settings *InternalDFTRef* will use fixed DFT reference based on set system frequency. *AdDFTRefChn* will use DFT reference from the selected group block, when own group selected adaptive DFT reference will be used based on calculated signal frequency from own group. The setting *ExternalDFTRef* will use reference based on what is connected to input DFTSPFC.

ConnectionType: Connection type for that specific instance (n) of the SMAI (if it is *Ph-N* or *Ph-Ph*). Depending on connection type setting the not connected *Ph-N* or *Ph-Ph* outputs will be calculated.

Negation: If the user wants to negate the 3ph signal, it is possible to choose to negate only the phase signals *Negate3Ph*, only the neutral signal *NegateN* or both *Negate3Ph +N*. negation means rotation with 180° of the vectors.

VBase: Base voltage setting (for each instance x).

MinValFreqMeas: The minimum value of the voltage for which the frequency is calculated, expressed as percent of VBase (for each instance n).

Settings *DFTRefExtOut* and *DFTReference* shall be set to default value *InternalDFTRef* if no VT inputs are available.

Even if the user sets the *AnalogInputType* of a SMAI block to “*Current*”, the *MinValFreqMeas* is still visible. However, using the current channel values as base for frequency measurement is **not**

recommendable for a number of reasons, not last among them being the low level of currents that one can have in normal operating conditions.

Examples of adaptive frequency tracking

Task time group 1	
SMAI instance	**3 phase group**
SMAI1:1	1
SMAI2:2	2
SMAI3:3	3
SMAI4:4	4
SMAI5:5	5
SMAI6:6	6
SMAI7:7	7
SMAI8:8	8
SMAI9:9	9
SMAI10:10	10
SMAI11:11	11
SMAI12:12	12

AdDFTRefCh7

Task time group 2	
SMAI instance	**3 phase group**
SMAI1:13	1
SMAI2:14	2
SMAI3:15	3
SMAI4:16	4
SMAI5:17	5
SMAI6:18	6
SMAI7:19	7
SMAI8:20	8
SMAI9:21	9
SMAI10:22	10
SMAI11:23	11
SMAI12:24	12

AdDFTRefCh4

Task time group 3	
SMAI instance	**3 phase group**
SMAI1:25	1
SMAI2:26	2
SMAI3:27	3
SMAI4:28	4
SMAI5:29	5
SMAI6:30	6
SMAI7:31	7
SMAI8:32	8
SMAI9:33	9
SMAI10:34	10
SMAI11:35	11
SMAI12:36	12

IEC07000197.vsd

Figure 23: Twelve SMAI instances are grouped within one task time. SMAI blocks are available in three different task times in the IED. Two pointed instances are used in the following examples.

The examples shows a situation with adaptive frequency tracking with one reference selected for all instances. In practice each instance can be adapted to the needs of the actual application.

Example 1

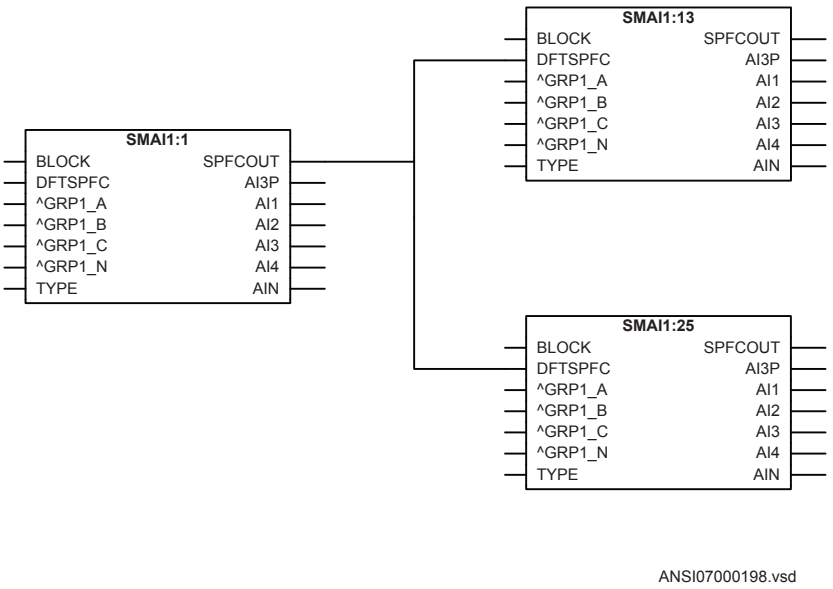

Figure 24: Configuration for using an instance in task time group 1 as DFT reference

Assume instance SMAI7:7 in task time group 1 has been selected in the configuration to control the frequency tracking . Observe that the selected reference instance (i.e. frequency tracking master) must be a voltage type. Observe that positive sequence voltage is used for the frequency tracking feature.

For task time group 1 this gives the following settings (see Figure 23 for numbering):

SMAI1:1: *DFTRefExtOut* = *AdDFTRefCh7* to route SMAI7:7 reference to the SPFCOUT output, *DFTReference* = *AdDFTRefCh7* for SMAI1:1 to use SMAI7:7 as reference (see Figure 24) SMAI2:2 – SMAI12:12: *DFTReference* = *AdDFTRefCh7* for SMAI2:2 – SMAI12:12 to use SMAI7:7 as reference.

For task time group 2 this gives the following settings:

SMAI1:13 – SMAI12:24: *DFTReference* = *ExternalDFTRef* to use DFTSPFC input as reference (SMAI7:7)

For task time group 3 this gives the following settings:

SMAI1:25 – SMAI12:36: *DFTReference* = *ExternalDFTRef* to use DFTSPFC input as reference (SMAI7:7)

Example 2

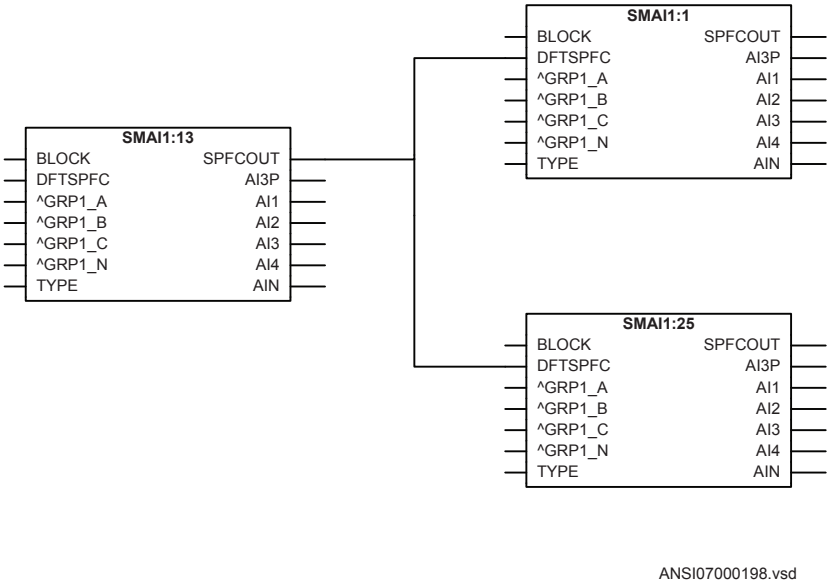

Figure 25: Configuration for using an instance in task time group 2 as DFT reference.

Assume instance SMAI4:16 in task time group 2 has been selected in the configuration to control the frequency tracking for all instances. Observe that the selected reference instance (i.e. frequency tracking master) must be a voltage type. Observe that positive sequence voltage is used for the frequency tracking feature.

For task time group 1 this gives the following settings (see Figure 23 for numbering):

SMAI1:1 – SMAI12:12: *DFTReference* = *ExternalDFTRef* to use DFTSPFC input as reference (SMAI4:16)

For task time group 2 this gives the following settings:

SMAI1:13: *DFTRefExtOut* = *AdDFTRefCh4* to route SMAI4:16 reference to the SPFCOUT output, *DFTReference* = *AdDFTRefCh4* for SMAI1:13 to use SMAI4:16 as reference (see Figure 25) SMAI2:14 – SMAI12:24: *DFTReference* = *AdDFTRefCh4* to use SMAI4:16 as reference.

For task time group 3 this gives the following settings:

SMAI1:25 – SMAI12:36: *DFTReference* = *ExternalDFTRef* to use DFTSPFC input as reference (SMAI4:16)

3.4.12.4 Setting parameters

Table 20: SMAI1 Non group settings (basic)

Name	Values (Range)	Unit	Step	Default	Description
DFTRefExtOut	InternalDFTRef AdDFTRefCh1 AdDFTRefCh2 AdDFTRefCh3 AdDFTRefCh4 AdDFTRefCh5 AdDFTRefCh6 AdDFTRefCh7 AdDFTRefCh8 AdDFTRefCh9 AdDFTRefCh10 AdDFTRefCh11 AdDFTRefCh12 External DFT ref	-	-	InternalDFTRef	DFT reference for external output
DFTReference	InternalDFTRef AdDFTRefCh1 AdDFTRefCh2 AdDFTRefCh3 AdDFTRefCh4 AdDFTRefCh5 AdDFTRefCh6 AdDFTRefCh7 AdDFTRefCh8 AdDFTRefCh9 AdDFTRefCh10 AdDFTRefCh11 AdDFTRefCh12 External DFT ref	-	-	InternalDFTRef	DFT reference
ConnectionType	Ph-N Ph-Ph	-	-	Ph-N	Input connection type
TYPE	1 - 2	Ch	1	1	1=Voltage, 2=Current

Table 21: SMAI1 Non group settings (advanced)

Name	Values (Range)	Unit	Step	Default	Description
Negation	Disabled NegateN Negate3Ph Negate3Ph+N	-	-	Disabled	Negation
MinValFreqMeas	5 - 200	%	1	10	Limit for frequency calculation in % of VBase
VBase	0.05 - 2000.00	kV	0.05	400.00	Base voltage

Table 22: SMAI2 Non group settings (basic)

Name	Values (Range)	Unit	Step	Default	Description
DFTReference	InternalDFTRef AdDFTRefCh1 AdDFTRefCh2 AdDFTRefCh3 AdDFTRefCh4 AdDFTRefCh5 AdDFTRefCh6 AdDFTRefCh7 AdDFTRefCh8 AdDFTRefCh9 AdDFTRefCh10 AdDFTRefCh11 AdDFTRefCh12 External DFT ref	-	-	InternalDFTRef	DFT reference
ConnectionType	Ph-N Ph-Ph	-	-	Ph-N	Input connection type
TYPE	1 - 2	Ch	1	1	1=Voltage, 2=Current

Table 23: SMAI2 Non group settings (advanced)

Name	Values (Range)	Unit	Step	Default	Description
Negation	Disabled NegateN Negate3Ph Negate3Ph+N	-	-	Disabled	Negation
MinValFreqMeas	5 - 200	%	1	10	Limit for frequency calculation in % of VBase
VBase	0.05 - 2000.00	kV	0.05	400.00	Base voltage

3.4.13 Summation block 3 phase 3PHSUM

3.4.13.1 Application

The analog summation block 3PHSUM function block is used in order to get the sum of two sets of 3 phase analog signals (of the same type) for those IED functions that might need it.

3.4.13.2 Setting guidelines

The summation block receives the three-phase signals from SMAI blocks. The summation block has several settings.

SummationType: Summation type (*Group 1 + Group 2*, *Group 1 - Group 2*, *Group 2 - Group 1* or *–(Group 1 + Group 2)*).

DFTReference: The reference DFT block (*InternalDFT Ref*,*DFTRefGrp1* or *External DFT ref*) .

FreqMeasMinVal: The minimum value of the voltage for which the frequency is calculated, expressed as percent of *VBase*base voltage setting (for each instance x).

VBase: Base voltage setting.

3.4.13.3 Setting parameters

Table 24: 3PHSUM Non group settings (basic)

Name	Values (Range)	Unit	Step	Default	Description
SummationType	Group1+Group2 Group1-Group2 Group2-Group1 -(Group1+Group2)	-	-	Group1+Group2	Summation type
DFTReference	InternalDFTRef AdDFTRefCh1 External DFT ref	-	-	InternalDFTRef	DFT reference

Table 25: 3PHSUM Non group settings (advanced)

Name	Values (Range)	Unit	Step	Default	Description
FreqMeasMinVal	5 - 200	%	1	10	Magnitude limit for frequency calculation in % of Vbase
VBase	0.05 - 2000.00	kV	0.05	400.00	Base voltage

3.4.14 Authority status ATHSTAT

3.4.14.1 Application

Authority status (ATHSTAT) function is an indication function block, which informs about two events related to the IED and the user authorization:

- the fact that at least one user has tried to log on wrongly into the IED and it was blocked (the output USRBLKED)
- the fact that at least one user is logged on (the output LOGGEDON)

The two outputs of ATHSTAT function can be used in the configuration for different indication and alarming reasons, or can be sent to the station control for the same purpose.

3.4.14.2 Setting parameters

The function does not have any parameters available in the local HMI or PCM600.

3.4.15 Denial of service DOS

3.4.15.1 Application

The denial of service functions (DOSFRNT, DOSOEMAB and DOSOEMCD) are designed to limit the CPU load that can be produced by Ethernet network traffic on the IED. The communication facilities must not be allowed to compromise the primary functionality of the device. All inbound network traffic will be quota controlled so that too heavy network loads can be controlled. Heavy network load might for instance be the result of malfunctioning equipment connected to the network.

DOSFRNT, DOSOEMAB and DOSOEMCD measures the IED load from communication and, if necessary, limit it for not jeopardizing the IEDs control and protection functionality due to high CPU load. The function has the following outputs:

- LINKUP indicates the Ethernet link status
- WARNING indicates that communication (frame rate) is higher than normal
- ALARM indicates that the IED limits communication

3.4.15.2 Setting guidelines

The function does not have any parameters available in the local HMI or PCM600.

3.5 Wide area measurement system

3.5.1 C37.118 Phasor Measurement Data Streaming Protocol Configuration PMUCONF

Function description	IEC 61850 identification	IEC 60617 identification	ANSI/IEEE C37.2 device number
Configuration parameters for IEEE 1344 and C37.118 protocol	PMUCONF	-	-

3.5.1.1 Application

The Configuration parameters for IEEE 1344 and C37.118 protocol PMUCONF protocol contains:

- Data about the particular RES670 IED in the PMU synchrophasor streaming network. For example, IP address, id, communication port.
- Format of the data streamed through the protocol. For example, polar, rectangular, float or integer.

3.5.1.2 Setting guidelines

The Configuration parameters for IEEE 1344 and C37.118 protocol PMUCONF function are set via the local HMI or PCM600.

The UDP implementation in RES670 is a UDP multicast server. To get the data from RES670, subscribe to multicast server which sends only data frames. The header and the configuration frames are achieved using TCP/IP.

1344TCPPort: specifies the TCP port for the control of IEEE 1344 data.

C37.118Port: specifies the TCP port for the control of IEEE C37.118 data.

TCPPortUDPData: specifies the TCP port for the control of data sent over UDP.

PMUId: Identifies the PMU.

ReportRate: specifies the transfer rate of the data sent via C37.118 or IEEE 1344 protocol.

SendUDP: specifies if the multicast data communication via UDP is *Enabled*,*Disabled* or controlled by a TCP command. If this setting is *Disabled* then, it means that no response is received.

ProtocolOnUDP: specifies the protocol used to send the data. Data can be sent using either, C37.118 or IEEE 1344 protocol.

UDPDestAddres: corresponds to the UDP destination address.

UDPDestPort: corresponds to the UDP destination port.

PhasorDataType: selects the phasor data type. The values can be *Float* or *Integer*.

PhasorFormat: selects the phasor format as a *Rectangle* or *Polar*.

SendFreqInfo: when *Enabled* sends the frequency and the rate of change of the frequency information.

It is possible to turn off the multicast data communication. If UDP data is not used, the multicast data communication is turned off either by setting the parameter *SendUDP* to *Disabled* or by sending a C37.118 or IEEE 1344 command frame containing RTDOFF or RTDON to the terminal on TCP port specified by *TCPPortUDPData* with TCP/IP protocol.

3.5.1.3 Setting parameters

PMUCONF Settings

Table 26: PMUCONF Non group settings (basic)

Name	Values (Range)	Unit	Step	Default	Description
1344TCPPort	0 - 99999	-	1	4711	TCP port for control of IEEE 1344 data
C37.118TCPPort	0 - 99999	-	1	4712	TCP port for control of IEEE C37.118 data
TCPPortUDPData	0 - 99999	-	1	4713	TCP port for control of data sent over UDP
PMUId	1 - 65534	-	1	1	PMU identifier
ReportRate	10/10 fr/s (60/50Hz) 12/10 fr/s (60/50Hz) 15/10 fr/s (60/50Hz) 20/25 fr/s (60/50Hz) 30/25 fr/s (60/50Hz) 60/50 fr/s (60/50Hz) 120/100 fr/s (60/50Hz) 240/200 fr/s (60/50Hz)	-	-	60/50 fr/s (60/50Hz)	Phasor data report rate
SendUDP	Disabled Enabled SetByProtocol	-	-	Disabled	Send UDP
ProtocolOnUDP	IEEE1344 C37.118	-	-	C37.118	Select protocol on UDP
UDPDestAddres	0 - 18	IP Address	1	234.5.6.7	UDP destination address
UDPDestPort	0 - 99999	-	1	8910	UDP destination port
PhasorDataType	Float Integer	-	-	Float	Select phasor data type
PhasorFormat	Rectangle Polar	-	-	Rectangle	Select phasor format
FreqDataType	Float Integer	-	-	Float	Select frequency data type
SendFreqInfo	Disabled Enabled	-	-	Enabled	Send frequency and rate of change of frequency information

3.5.2 Protocol reporting via IEEE 1344 and C37.118 PMUREPORT

Function description	IEC 61850 identification	IEC 60617 identification	ANSI/IEEE C37.2 device number
Protocol reporting via IEEE 1344 and C37.118	PMUREPORT	-	-

3.5.2.1 Application

The phasor measurement reporting block moves the phasor calculations into a C37.118 frame which contains data about PMU configuration, analog values, binary signal indications and information about time synchronization quality.

The message generated by the PMUREPORT function block is set in accordance with the standard IEEE 1344 protocol for further process.

The phasor measurement reporting block has settings that allows the user to use one phasor to report the voltage or a current phasor. There are also settings for positive or negative sequence phasors, reporting rate and phasor representation (polar or rectangular).

Phasor data can be reported to up to 8 phasor data concentrators over TCP. It is also possible to use UDP for multicast transmission of phasor data.

3.5.2.2 Setting guidelines

The parameters for Protocol reporting via IEEE 1344 and C37.118 PMUREPORT function are set via the local HMI or PCM600.

Operation: Set to *Enabled* or *Disabled* to enable or disable the function.

ReportFilter: specifies the phasor data report filter selection using these values:

- *For 10/8.3 fr/s*
- *For 12/10 fr/s*
- *For 15/12.5 fr/s*
- *For 20/16.7 fr/s*
- *For 30/25 fr/s*
- *For 60/50 fr/s*
- *For 120/100 fr/s*
- *For 240/200 fr/s*

RptTimetag: specifies the factor for the group delay introduced by the transfer filter. The delay can be introduced either in the *FirstSample*, the *MiddleSample* or, the *LastSample*.

Phasorn (where *n=1,2,3,4,5,6,7,8*): specifies which component (pos/neg/zero) to report for each phasor.

3.5.2.3 Setting parameters

PMUREPORT Settings

Table 27: PMUREPORT Non group settings (basic)

Name	Values (Range)	Unit	Step	Default	Description
Operation	Disabled Enabled	-	-	Enabled	Operation Mode off/on
ReportFilter	For 10/8.3 fr/s For 12/10 fr/s For 15/12.5 fr/s For 20/16.7 fr/s For 30/25 fr/s For 60/50 fr/s For 120/100 fr/s For 240/200 fr/s	-	-	For 60/50 fr/s	Phasor data report filter selection
RptTimetag	FirstSample MiddleSample LastSample	-	-	MiddleSample	Method of phasor timetag
Phasor1Report	Disabled Enabled	-	-	Enabled	Reporting phasor 1
Phasor2Report	Disabled Enabled	-	-	Enabled	Reporting phasor 2
Phasor3Report	Disabled Enabled	-	-	Enabled	Reporting phasor 3
Phasor4Report	Disabled Enabled	-	-	Enabled	Reporting phasor 4
Phasor5Report	Disabled Enabled	-	-	Enabled	Reporting phasor 5
Phasor6Report	Disabled Enabled	-	-	Enabled	Reporting phasor 6
Phasor7Report	Disabled Enabled	-	-	Enabled	Reporting phasor 7
Phasor8Report	Disabled Enabled	-	-	Enabled	Reporting phasor 8
Phasor1	NegSeq PosSeq ZeroSeq	-	-	PosSeq	Group Connections for Phasor 1
Phasor2	NegSeq PosSeq ZeroSeq	-	-	PosSeq	Group Connections for Phasor 2
Phasor3	NegSeq PosSeq ZeroSeq	-	-	PosSeq	Group Connections for Phasor 3

Table continues on next page

Name	Values (Range)	Unit	Step	Default	Description
Phasor4	NegSeq PosSeq ZeroSeq	-	-	PosSeq	Group Connections for Phasor 4
Phasor5	NegSeq PosSeq ZeroSeq	-	-	PosSeq	Group Connections for Phasor 5
Phasor6	NegSeq PosSeq ZeroSeq	-	-	PosSeq	Group Connections for Phasor 6
Phasor7	NegSeq PosSeq ZeroSeq	-	-	PosSeq	Group Connections for Phasor 7
Phasor8	NegSeq PosSeq ZeroSeq	-	-	PosSeq	Group Connections for Phasor 8

3.6 Current protection

3.6.1 Four step phase overcurrent protection OC4PTOC (51/67)

Function description	IEC 61850 identification	IEC 60617 identification	ANSI/IEEE C37.2 device number
Four step phase overcurrent protection	OC4PTOC	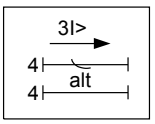	51/67

3.6.1.1 Application

The Four step phase overcurrent protection 3-phase output OC4PTOC (51_67) is used in several applications in the power system. Some applications are:

- Short circuit protection of feeders in distribution and subtransmission systems. Normally these feeders have radial structure.
- Back-up short circuit protection of transmission lines.
- Back-up short circuit protection of power transformers.
- Short circuit protection of different kinds of equipment connected to the power system such as; shunt capacitor banks, shunt reactors, motors and others.
- Back-up short circuit protection of power generators.

If VT inputs are not available or not connected, setting parameter *DirModeSelx* (*x* = step 1, 2, 3 or 4) shall be left to default value *Non-directional*.

In many applications several steps with different current pick up levels and time delays are needed. OC4PTOC (51_67) can have up to four different, individual settable, steps. The flexibility of each step of OC4PTOC (51_67) is great. The following options are possible:

Non-directional / Directional function: In most applications the non-directional functionality is used. This is mostly the case when no fault current can be fed from the protected object itself. In order to achieve both selectivity and fast fault clearance, the directional function can be necessary.

Choice of delay time characteristics: There are several types of delay time characteristics available such as definite time delay and different types of inverse time delay characteristics. The selectivity between different overcurrent protections is normally enabled by co-ordination between the function time delays of the different protections. To enable optimal co-ordination between all overcurrent protections, they should have the same time delay characteristic. Therefore a wide range of standardized inverse time characteristics are available: IEC and ANSI. It is also possible to tailor make the inverse time characteristic.

Normally it is required that the phase overcurrent protection shall reset as fast as possible when the current level gets lower than the operation level. In some cases some sort of delayed reset is required. Therefore different kinds of reset characteristics can be used.

For some protection applications there can be a need to change the current pick-up level for some time. A typical case is when the protection will measure the current to a large motor. At the start up sequence of a motor the start current can be significantly larger than the rated current of the motor. Therefore there is a possibility to give a setting of a multiplication factor to the current pick-up level. This multiplication factor is activated from a binary input signal to the function.

Power transformers can have a large inrush current, when being energized. This phenomenon is due to saturation of the transformer magnetic core during parts of the period. There is a risk that inrush current will reach levels above the pick-up current of the phase overcurrent protection. The inrush current has a large 2nd harmonic content. This can be used to avoid unwanted operation of the protection. Therefore, OC4PTOC (51/67) have a possibility of 2nd harmonic restrain if the level of this harmonic current reaches a value above a set percentage of the fundamental current.

The phase overcurrent protection is often used as protection for two and three phase short circuits. In some cases it is not wanted to detect single-phase ground faults by the phase overcurrent protection. This fault type is detected and cleared after operation of

ground fault protection. Therefore it is possible to make a choice how many phases, at minimum, that have to have current above the pick-up level, to enable operation. If set *1 of 3* it is sufficient to have high current in one phase only. If set *2 of 3* or *3 of 3* single-phase ground faults are not detected.

3.6.1.2 Setting guidelines

When inverse time overcurrent characteristic is selected, the operate time of the stage will be the sum of the inverse time delay and the set definite time delay. Thus, if only the inverse time delay is required, it is of utmost importance to set the definite time delay for that stage to zero.

The parameters for Four step phase overcurrent protection 3-phase output OC4PTOC (51/67) are set via the local HMI or PCM600.

The following settings can be done for OC4PTOC (51/67).

MeasType: Selection of discrete Fourier filtered (*DFT*) or true RMS filtered (*RMS*) signals. *RMS* is used when the harmonic contents are to be considered, for example in applications with shunt capacitors.

Operation: The protection can be set to *Disabled* or *Enabled*

IBase: Base current in primary A. This current is used as reference for current setting. It can be suitable to set this parameter to the rated primary current of the current of the protected object.

VBase: Base voltage level in kV. This voltage is give as a phase-to-phase voltage and this is the reference for voltage related settings of the function. Normally the setting should be chosen to the rated phase-to-phase voltage of the voltage transformer feeding the protection IED.

AngleRCA: Protection characteristic angle set in degrees. If the angle of the fault loop current has the angle RCA the direction to fault is forward.

AngleROA: Angle value, given in degrees, to define the angle sector of the directional function, see figure 26.

PUMinOpPhSel: Minimum current for phase selection set in % of *IBase*. This setting should be less than the lowest step setting. Default setting is 7%.

NumPhSel: Number of phases, with high current, required for operation. The setting possibilities are: *Not used*,*1 out of 3*, *2 out of 3* and *3 out of 3*. Default setting is *1 out of 3*.

2ndHarmStab: Operate level of 2nd harmonic current restrain set in % of the fundamental current. The setting range is *5 - 100*% in steps of 1%. Default setting is 20%.

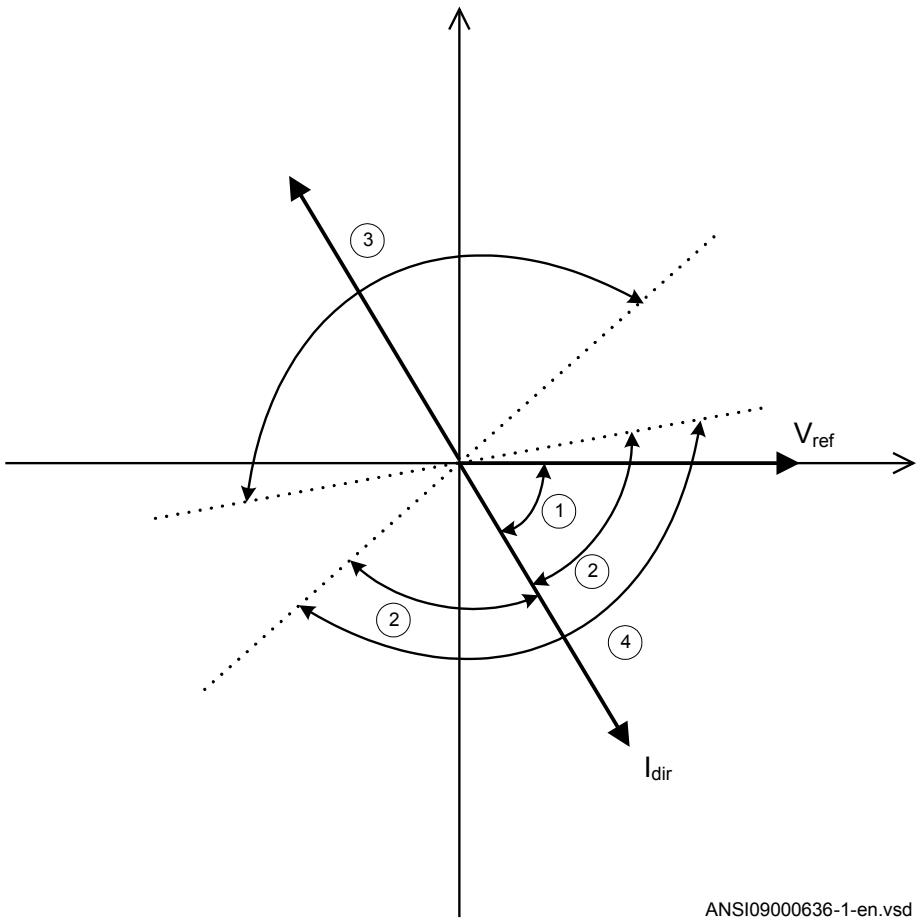

Figure 26: Directional function characteristic

1. RCA = Relay characteristic angle
2. ROA = Relay operating angle
3. Reverse
4. Forward

Settings for each step

x means step 1, 2, 3 and 4.

DirModeSelx: The directional mode of step *x*. Possible settings are *Disabled*/*Non-directional*/*Forward*/*Reverse*.

Characteristx: Selection of time characteristic for step *x*. Definite time delay and different types of inverse time characteristics are available according to table 28.

Table 28: Inverse time characteristics

Curve name
ANSI Extremely Inverse
ANSI Very Inverse
ANSI Normal Inverse
ANSI Moderately Inverse
ANSI/IEEE Definite time
ANSI Long Time Extremely Inverse
ANSI Long Time Very Inverse
ANSI Long Time Inverse
IEC Normal Inverse
IEC Very Inverse
IEC Inverse
IEC Extremely Inverse
IEC Short Time Inverse
IEC Long Time Inverse
IEC Definite Time
User Programmable
ASEA RI
RXIDG (logarithmic)

The different characteristics are described in Technical reference manual.

Pickupx: Operate phase current level for step *x* given in % of *IBase*.

tx: Definite time delay for step *x*. Used if definite time characteristic is chosen.

TDx: Time multiplier for inverse time delay for step *x*.

IMinx: Minimum operate current for step *x* in % of *IBase*. Set *IMinx* below *Pickupx* for every step to achieve ANSI reset characteristic according to standard. If *IMinx* is set above *Pickupx* for any step the ANSI reset works as if current is zero when current drops below *IMinx*.

MultPUx: Multiplier for scaling of the current setting value. If a binary input signal (enableMultiplier) is activated the current operation level is increase by this setting constant. Setting range: 1.0-10.0

txMin: Minimum operate time for all inverse time characteristics. At high currents the inverse time characteristic might give a very short operation time. By setting this parameter the operation time of the step can never be shorter than the setting. Setting range: 0.000 - 60.000s in steps of 0.001s.

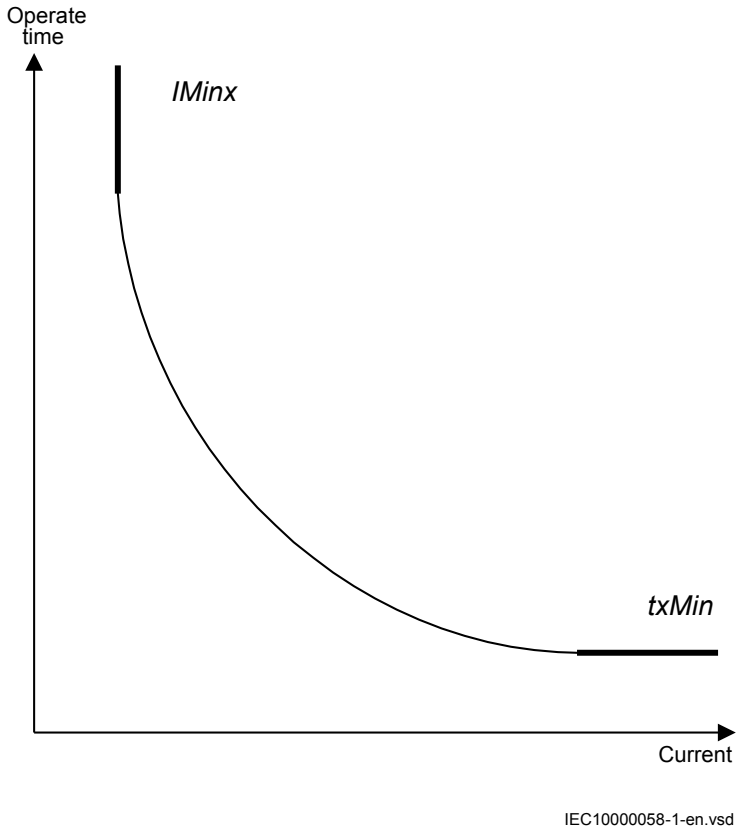

Figure 27: Minimum operate current and operation time for inverse time characteristics

In order to fully comply with curves definition setting parameter *txMin* shall be set to the value, which is equal to the operating time of the selected inverse curve for measured current of twenty times the set current pickup value. Note that the operating time value is dependent on the selected setting value for time multiplier *kx*.

ResetTypeCrvx: The reset of the delay timer can be made in different ways. By choosing setting the possibilities are according to table 29.

Table 29: Reset possibilities

Curve name	Curve index no.
Instantaneous	1
IEC Reset (constant time)	2
ANSI Reset (inverse time)	3

The delay characteristics are described in the technical reference manual. There are some restrictions regarding the choice of reset delay.

For the definite time delay characteristics the possible delay time settings are instantaneous (1) and IEC (2 = set constant time reset).

For ANSI inverse time characteristics all three types of reset time characteristics are available; instantaneous (1), IEC (2 = set constant time reset) and ANSI (3 = current dependent reset time).

For IEC inverse time characteristics the possible delay time settings are instantaneous (1) and IEC (2 = set constant time reset).

For the customer tailor made inverse time delay characteristics (type 17) all three types of reset time characteristics are available; instantaneous (1), IEC (2 = set constant time reset) and ANSI (3 = current dependent reset time). If the current dependent type is used settings pr, tr and cr must be given.

HarmRestrainx: Enable block of step *x* from the harmonic restrain function (2nd harmonic). This function should be used when there is a risk if power transformer inrush currents might cause unwanted trip. Can be set *Disabled*/*Enabled*.

tPCrvx, *tACrvx*, *tBCrvx*, *tCCrvx*: Parameters for customer creation of inverse time characteristic curve (Curve type = 17). See equation 19 for the time characteristic equation.

$$t[s] = \left(\frac{A}{\left(\frac{i}{in>} \right)^{p} - C} + B \right) \cdot MultPUx$$

(Equation 19)

For more information, refer to the technical reference manual.

tPRCrvx, *tTRCrvx*, *tCRCrvx*: Parameters for customer creation of inverse reset time characteristic curve (Reset Curve type = 3). Further description can be found in the technical reference manual.

3.6.1.3 Setting parameters

Table 30: OC4PTOC (51_67) Group settings (basic)

Name	Values (Range)	Unit	Step	Default	Description
Operation	Disabled Enabled	-	-	Disabled	Disable/Enable Operation
IBase	1 - 99999	A	1	3000	Base current
Vbase	0.05 - 2000.00	kV	0.05	400.00	Base voltage
AngleRCA	40 - 65	Deg	1	55	Relay characteristic angle (RCA)
AngleROA	40 - 89	Deg	1	80	Relay operation angle (ROA)
NumPhSel	1 out of 3 2 out of 3 3 out of 3	-	-	1 out of 3	Number of phases required for phase selection (1 of 3, 2 of 3, 3 of 3)
DirModeSel1	Disabled Non-directional Forward Reverse	-	-	Non-directional	Directional mode of step 1 (Disabled, Nondir, Forward, Reverse)
Characterist1	ANSI Ext. inv. ANSI Very inv. ANSI Norm. inv. ANSI Mod. inv. ANSI Def. Time L.T.E. inv. L.T.V. inv. L.T. inv. IEC Norm. inv. IEC Very inv. IEC inv. IEC Ext. inv. IEC S.T. inv. IEC L.T. inv. IEC Def. Time Reserved Programmable RI type RD type	-	-	ANSI Def. Time	Selection of time delay curve type for step 1
Pickup1	1 - 2500	%IB	1	1000	Phase current operate level for step1 in % of IBase
t1	0.000 - 60.000	s	0.001	0.000	Definitive time delay of step 1
TD1	0.05 - 999.00	-	0.01	0.05	Time multiplier for the inverse time delay for step 1
IMin1	1 - 10000	%IB	1	100	Minimum operate current for step1in% of IBase
t1Min	0.000 - 60.000	s	0.001	0.000	Minimum operate time for inverse curves for step 1
MultPU1	1.0 - 10.0	-	0.1	2.0	Multiplier for current operate level for step 1
DirModeSel2	Disabled Non-directional Forward Reverse	-	-	Non-directional	Directional mode of step 2 (Disabled, Nondir, Forward, Reverse)

Table continues on next page

Name	Values (Range)	Unit	Step	Default	Description
Characterist2	ANSI Ext. inv. ANSI Very inv. ANSI Norm. inv. ANSI Mod. inv. ANSI Def. Time L.T.E. inv. L.T.V. inv. L.T. inv. IEC Norm. inv. IEC Very inv. IEC inv. IEC Ext. inv. IEC S.T. inv. IEC L.T. inv. IEC Def. Time Reserved Programmable RI type RD type	-	-	ANSI Def. Time	Selection of time delay curve type for step 2
Pickup2	1 - 2500	%IB	1	500	Phase current operate level for step2 in % of IBase
t2	0.000 - 60.000	s	0.001	0.400	Definitive time delay of step 2
TD2	0.05 - 999.00	-	0.01	0.05	Time multiplier for the inverse time delay for step 2
IMin2	1 - 10000	%IB	1	50	Minimum operate current for step2 in % of IBase
t2Min	0.000 - 60.000	s	0.001	0.000	Minimum operate time for inverse curves for step 2
MultPU2	1.0 - 10.0	-	0.1	2.0	Multiplier for current operate level for step 2
DirModeSel3	Disabled Non-directional Forward Reverse	-	-	Non-directional	Directional mode of step 3 (Disabled, Nondir, Forward, Reverse)
Characterist3	ANSI Ext. inv. ANSI Very inv. ANSI Norm. inv. ANSI Mod. inv. ANSI Def. Time L.T.E. inv. L.T.V. inv. L.T. inv. IEC Norm. inv. IEC Very inv. IEC inv. IEC Ext. inv. IEC S.T. inv. IEC L.T. inv. IEC Def. Time Reserved Programmable RI type RD type	-	-	ANSI Def. Time	Selection of time delay curve type for step 3

Table continues on next page

Name	Values (Range)	Unit	Step	Default	Description
Pickup3	1 - 2500	%IB	1	250	Phase current operate level for step3 in % of IBase
t3	0.000 - 60.000	s	0.001	0.800	Definitive time delay of step 3
TD3	0.05 - 999.00	-	0.01	0.05	Time multiplier for the inverse time delay for step 3
IMin3	1 - 10000	%IB	1	33	Minimum operate current for step3 in % of IBase
t3Min	0.000 - 60.000	s	0.001	0.000	Minimum operate time for inverse curves for step 3
MultPU3	1.0 - 10.0	-	0.1	2.0	Multiplier for current operate level for step 3
DirModeSel4	Disabled Non-directional Forward Reverse	-	-	Non-directional	Directional mode of step 4 (Disabled, Nondir, Forward, Reverse)
Characterist4	ANSI Ext. inv. ANSI Very inv. ANSI Norm. inv. ANSI Def. Time L.T.E. inv. L.T.V. inv. L.T. inv. IEC Norm. inv. IEC Very inv. IEC inv. IEC Ext. inv. IEC S.T. inv. IEC L.T. inv. IEC Def. Time Reserved Programmable RI type RD type	-	-	ANSI Def. Time	Selection of time delay curve type for step 4
Pickup4	1 - 2500	%IB	1	175	Phase current operate level for step4 in % of IBase
t4	0.000 - 60.000	s	0.001	2.000	Definitive time delay of step 4
TD4	0.05 - 999.00	-	0.01	0.05	Time multiplier for the inverse time delay for step 4
IMin4	1 - 10000	%IB	1	17	Minimum operate current for step4 in % of IBase
t4Min	0.000 - 60.000	s	0.001	0.000	Minimum operate time for inverse curves for step 4
MultPU4	1.0 - 10.0	-	0.1	2.0	Multiplier for current operate level for step 4

Table 31: OC4PTOC (51_67) Group settings (advanced)

Name	Values (Range)	Unit	Step	Default	Description
PUMinOpPhSel	1 - 100	%IB	1	7	Minimum current for phase selection in % of IBase
2ndHarmStab	5 - 100	%IB	1	20	Pickup of second harm restraint in % of Fundamental
ResetTypeCrv1	Instantaneous IEC Reset ANSI reset	-	-	Instantaneous	Selection of reset curve type for step 1
tReset1	0.000 - 60.000	s	0.001	0.020	Reset time delay used in IEC Definite Time curve step 1
tPCrv1	0.005 - 3.000	-	0.001	1.000	Parameter P for customer programmable curve for step 1
tACrv1	0.005 - 200.000	-	0.001	13.500	Parameter A for customer programmable curve for step 1
tBCrv1	0.00 - 20.00	-	0.01	0.00	Parameter B for customer programmable curve for step 1
tCCrv1	0.1 - 10.0	-	0.1	1.0	Parameter C for customer programmable curve for step 1
tPRCrv1	0.005 - 3.000	-	0.001	0.500	Parameter PR for customer programmable curve for step 1
tTRCrv1	0.005 - 100.000	-	0.001	13.500	Parameter TR for customer programmable curve for step 1
tCRCrv1	0.1 - 10.0	-	0.1	1.0	Parameter CR for customer programmable curve for step 1
HarmRestrain1	Disabled Enabled	-	-	Disabled	Enable block of step 1 from harmonic restrain
ResetTypeCrv2	Instantaneous IEC Reset ANSI reset	-	-	Instantaneous	Selection of reset curve type for step 2
tReset2	0.000 - 60.000	s	0.001	0.020	Reset time delay used in IEC Definite Time curve step 2
tPCrv2	0.005 - 3.000	-	0.001	1.000	Parameter P for customer programmable curve for step 2
tACrv2	0.005 - 200.000	-	0.001	13.500	Parameter A for customer programmable curve for step 2
tBCrv2	0.00 - 20.00	-	0.01	0.00	Parameter B for customer programmable curve for step 2
tCCrv2	0.1 - 10.0	-	0.1	1.0	Parameter C for customer programmable curve for step 2
tPRCrv2	0.005 - 3.000	-	0.001	0.500	Parameter PR for customer programmable curve for step 2
tTRCrv2	0.005 - 100.000	-	0.001	13.500	Parameter TR for customer programmable curve for step 2
tCRCrv2	0.1 - 10.0	-	0.1	1.0	Parameter CR for customer programmable curve for step 2

Table continues on next page

Name	Values (Range)	Unit	Step	Default	Description
HarmRestrain2	Disabled Enabled	-	-	Disabled	Enable block of step 2 from harmonic restrain
ResetTypeCrv3	Instantaneous IEC Reset ANSI reset	-	-	Instantaneous	Selection of reset curve type for step 3
tReset3	0.000 - 60.000	s	0.001	0.020	Reset time delay used in IEC Definite Time curve step 3
tPCrv3	0.005 - 3.000	-	0.001	1.000	Parameter P for customer programmable curve for step 3
tACrv3	0.005 - 200.000	-	0.001	13.500	Parameter A for customer programmable curve for step 3
tBCrv3	0.00 - 20.00	-	0.01	0.00	Parameter B for customer programmable curve for step 3
tCCrv3	0.1 - 10.0	-	0.1	1.0	Parameter C for customer programmable curve for step 3
tPRCrv3	0.005 - 3.000	-	0.001	0.500	Parameter PR for customer programmable curve for step 3
tTRCrv3	0.005 - 100.000	-	0.001	13.500	Parameter TR for customer programmable curve for step 3
tCRCrv3	0.1 - 10.0	-	0.1	1.0	Parameter CR for customer programmable curve for step 3
HarmRestrain3	Disabled Enabled	-	-	Disabled	Enable block of step3 from harmonic restrain
ResetTypeCrv4	Instantaneous IEC Reset ANSI reset	-	-	Instantaneous	Selection of reset curve type for step 4
tReset4	0.000 - 60.000	s	0.001	0.020	Reset time delay used in IEC Definite Time curve step 4
tPCrv4	0.005 - 3.000	-	0.001	1.000	Parameter P for customer programmable curve for step 4
tACrv4	0.005 - 200.000	-	0.001	13.500	Parameter A for customer programmable curve for step 4
tBCrv4	0.00 - 20.00	-	0.01	0.00	Parameter B for customer programmable curve for step 4
tCCrv4	0.1 - 10.0	-	0.1	1.0	Parameter C for customer programmable curve for step 4
tPRCrv4	0.005 - 3.000	-	0.001	0.500	Parameter PR for customer programmable curve for step 4
tTRCrv4	0.005 - 100.000	-	0.001	13.500	Parameter TR for customer programmable curve for step 4
tCRCrv4	0.1 - 10.0	-	0.1	1.0	Parameter CR for customer programmable curve for step 4
HarmRestrain4	Disabled Enabled	-	-	Disabled	Enable block of step 4 from harmonic restrain

Table 32: OC4PTOC (51_67) Non group settings (basic)

Name	Values (Range)	Unit	Step	Default	Description
MeasType	DFT RMS	-	-	DFT	Selection between DFT and RMS measurement

3.6.2 Four step residual overcurrent protection, zero, negative sequence direction EF4PTOC (51N/67N)

Function description	IEC 61850 identification	IEC 60617 identification	ANSI/IEEE C37.2 device number
Four step residual overcurrent protection	EF4PTOC	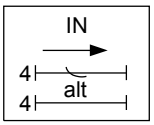	51N/67N

3.6.2.1 Setting guidelines

When inverse time overcurrent characteristic is selected, the operate time of the stage will be the sum of the inverse time delay and the set definite time delay. Thus, if only the inverse time delay is required, it is of utmost importance to set the definite time delay for that stage to zero.

The parameters for the four step residual overcurrent protection, zero or negative sequence direction EF4PTOC (51N/67N) are set via the local HMI or PCM600.

The following settings can be done for the four step residual overcurrent protection.

Operation: Sets the protection to *Enabled* or *Disabled*.

IBase: Base current in primary A. This current is used as reference for current setting. It can be suitable to set this parameter to the rated primary current of the current transformer where the current measurement is made.

VBase: Base voltage level in kV. This voltage is given as a phase-to-phase voltage and this is the reference for voltage related settings of the function. The residual voltage is used as reference voltage for the directional function. Normally the setting should be chosen to the rated phase-to-phase voltage of the voltage transformer feeding the protection IED.

Settings for each step (x = 1, 2, 3 and 4)

DirModeSelx: The directional mode of step *x*. Possible settings are *Disabled*/*Non-directional*/*Forward*/*Reverse*.

Characteristx: Selection of time characteristic for step *x*. Definite time delay and different types of inverse time characteristics are available.

Inverse time characteristic enables fast fault clearance of high current faults at the same time as selectivity to other inverse time phase overcurrent protections can be assured. This is mainly used in radial fed networks but can also be used in meshed networks. In meshed networks the settings must be based on network fault calculations.

To assure selectivity between different protections, in the radial network, there have to be a minimum time difference Δt between the time delays of two protections. The minimum time difference can be determined for different cases. To determine the shortest possible time difference, the operation time of protections, breaker opening time and protection resetting time must be known. These time delays can vary significantly between different protective equipment. The following time delays can be estimated:

Protection operate time:	15-60 ms
Protection resetting time:	15-60 ms
Breaker opening time:	20-120 ms

The different characteristics are described in the technical reference manual.

Pickup"x": Operate residual current level for step *x* given in % of *IBase*.

kx: Time multiplier for the dependent (inverse) characteristic for step *x*.

IMinx: Minimum operate current for step *x* in % of *IBase*. Set *IMinx* below *Pickupx* for every step to achieve ANSI reset characteristic according to standard. If *IMinx* is set above *Pickupx* for any step the ANSI reset works as if current is zero when current drops below *IMinx*.

INxMult: Multiplier for scaling of the current setting value. If a binary input signal (MULTPUx) is activated the current operation level is increased by this setting constant.

txMin: Minimum operating time for inverse time characteristics. At high currents the inverse time characteristic might give a very short operation time. By setting this parameter the operation time of the step can never be shorter than the setting.

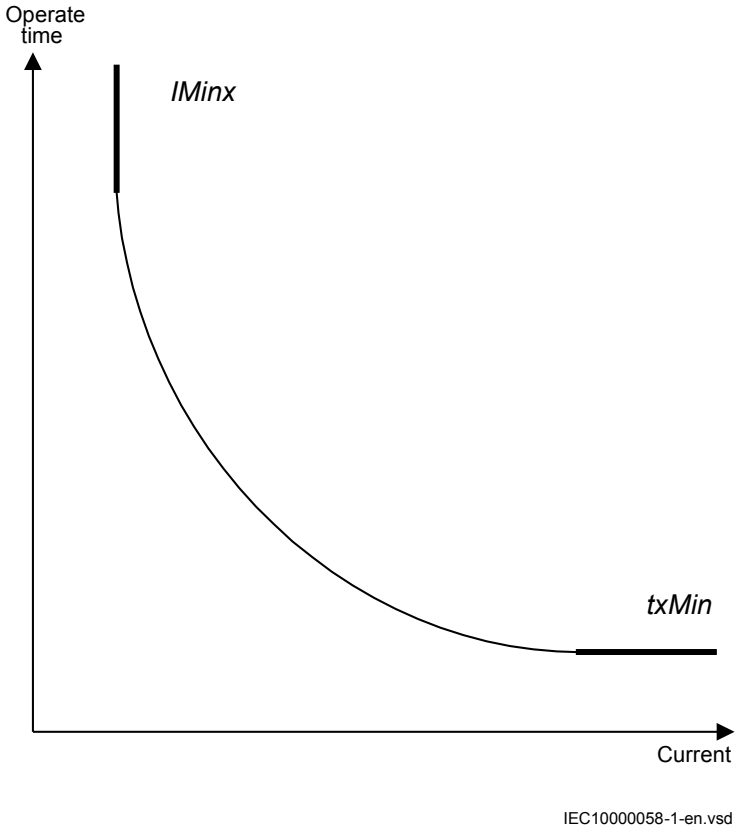

Figure 28: Minimum operate current and operate time for inverse time characteristics

In order to fully comply with curves definition the setting parameter *txMin* shall be set to the value which is equal to the operate time of the selected IEC inverse curve for measured current of twenty times the set current pickup value. Note that the operate time value is dependent on the selected setting value for time multiplier *kx*.

ResetTypeCrvx: The reset of the delay timer can be made in different ways. The possibilities are described in the technical reference manual.

tPCrvx, tACrvx, tBCrvx, tCCrvx: Parameters for user programmable of inverse time characteristic curve. The time characteristic equation is according to equation 20:

$$t[s] = \left(\frac{A}{\left(\frac{i}{ipickup} \right)^{p} - C} + B \right) \cdot TD$$

(Equation 20)

Further description can be found in the technical reference manual.

tPRCrvx, tTRCrvx, tCRCrvx: Parameters for user programmable of inverse reset time characteristic curve. Further description can be found in the technical reference manual.

Common settings for all steps

tx: Definite time delay for step *x*. Used if definite time characteristic is chosen.

AngleRCA: Relay characteristic angle given in degree. This angle is defined as shown in figure 29. The angle is defined positive when the residual current lags the reference voltage (Vpol = $3V_0$ or V_2)

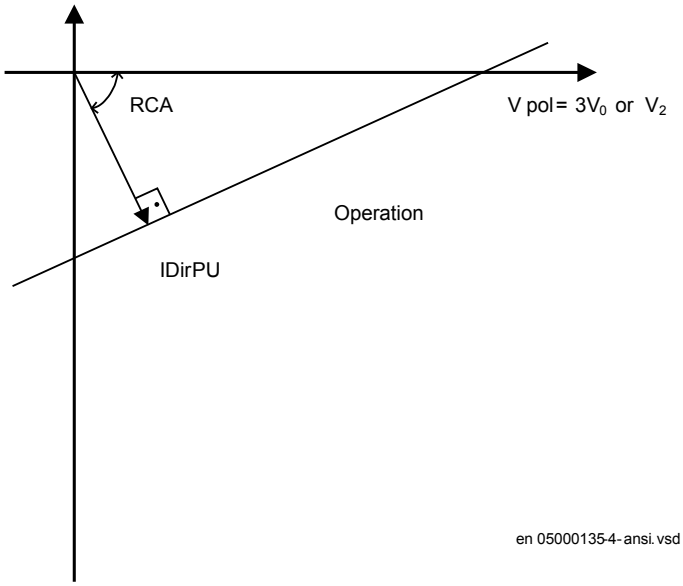

Figure 29: Relay characteristic angle given in degree

In a normal transmission network a normal value of RCA is about 65°. The setting range is -180° to +180°.

polMethod: Defines if the directional polarization is from

- *Voltage* ($3V_0$ or V_2)
- *Current* ($3I_0 \cdot$ ZNpol or $3I_2 \cdot$ZNpol where ZNpol is RNpol + jXNpol), or
- both currents and voltage, *Dual* (dual polarizing, ($3V_0 + 3I_0 \cdot$ ZNpol) or ($V_2 + I_2 \cdot$ ZNpol)).

Normally voltage polarizing from the internally calculated residual sum or an external open delta is used.

Current polarizing is useful when the local source is strong and a high sensitivity is required. In such cases the polarizing voltage ($3V_0$) can be below 1% and it is then necessary to use current polarizing or dual polarizing. Multiply the required set current (primary) with the minimum impedance (ZNpol) and check that the percentage of the phase-to-ground voltage is definitely higher than 1% (minimum $3V_0$>*VPolMin* setting) as a verification.

RNPol, XNPol: The zero-sequence source is set in primary ohms as base for the current polarizing. The polarizing voltage is then achieved as $3I_0 \cdot$ ZNpol. The ZNpol can be defined as $(ZS_1\text{-}ZS_0)/3$, that is the ground return impedance of the source behind the protection. The maximum ground-fault current at the local source can be used to calculate the value of ZN as $V/(\sqrt{3} \cdot 3I_0)$ Typically, the minimum ZNPol ($3 \cdot$ zero sequence source) is set. Setting is in primary ohms.

When the dual polarizing method is used it is important that the setting*Pickupx*or the product $3I_0 \cdot$ ZNpol is not greater than $3V_0$. If so, there is a risk for incorrect operation for faults in the reverse direction.

IPolMin: is the minimum ground-fault current accepted for directional evaluation. For smaller currents than this value the operation will be blocked. Typical setting is 5-10% of *IBase*.

VPolMin: Minimum polarization (reference) residual voltage for the directional function, given in % of *VBase*/$\sqrt{3}$.

IDirPU: Operate residual current release level in % of *IBase* for directional comparison scheme. The setting is given in % of *IBase* and must be set below the lowest *INx*> setting, set for the directional measurement. The output signals, PUFW and PUREV can be used in a teleprotection scheme. The appropriate signal should be configured to the communication scheme block.

2nd harmonic restrain

If a power transformer is energized there is a risk that the current transformer core will saturate during part of the period, resulting in a transformer inrush current. This will give a declining residual current in the network, as the inrush current is deviating between the phases. There is a risk that the residual overcurrent function will give an unwanted trip. The inrush current has a relatively large ratio of 2nd harmonic component. This component can be used to create a restrain signal to prevent this unwanted function.

At current transformer saturation a false residual current can be measured by the protection. Also here the 2nd harmonic restrain can prevent unwanted operation.

2ndHarmStab: The rate of 2nd harmonic current content for activation of the 2nd harmonic restrain signal. The setting is given in % of the fundamental frequency residual current.

HarmRestrainx: Enable block of step *x* from the harmonic restrain function.

Parallel transformer inrush current logic

In case of parallel transformers there is a risk of sympathetic inrush current. If one of the transformers is in operation, and the parallel transformer is switched in, the asymmetric inrush current of the switched in transformer will cause partial saturation of the transformer already in service. This is called transferred saturation. The 2nd harmonic of the inrush currents of the two transformers will be in phase opposition. The summation of the two currents will thus give a small 2nd harmonic current. The residual fundamental current will however be significant. The inrush current of the transformer in service before the parallel transformer energizing, will be a little delayed compared to the first transformer. Therefore we will have high 2nd harmonic current initially. After a short period this current will however be small and the normal 2nd harmonic blocking will reset.

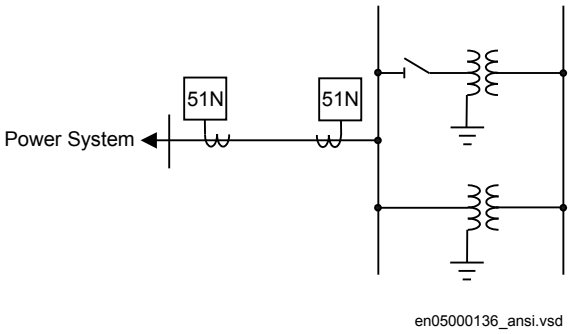

Figure 30: Application for parallel transformer inrush current logic

If the *BlkParTransf* function is activated the 2nd harmonic restrain signal will latch as long as the residual current measured by the relay is larger than a selected step current level. Assume that step 4 is chosen to be the most sensitive step of the four step residual overcurrent protection function EF4PTOC (51N_67N). The harmonic restrain blocking is enabled for this step. Also the same current setting as this step is chosen for the blocking at parallel transformer energizing.

Below the settings for the parallel transformer logic are described.

Use_PUValue: Gives which current level that should be used for activation of the blocking signal. This is given as one of the settings of the steps: Step 1/2/3/4. Normally the step having the lowest operation current level should be set.

BlkParTransf: This parameter can be set *Disable*/*Enable*, the parallel transformer logic.

Switch onto fault logic

In case of energizing a faulty object there is a risk of having a long fault clearance time, if the fault current is too small to give fast operation of the protection. The switch on to fault function can be activated from auxiliary signals from the circuit breaker, either the close command or the open/close position (change of position).

This logic can be used to issue fast trip if one breaker pole does not close properly at a manual or automatic closing.

SOTF and Under Time are similar functions to achieve fast clearance at asymmetrical closing based on requirements from different utilities.

The function is divided into two parts. The SOTF function will give operation from step 2 or 3 during a set time after change in the position of the circuit breaker. The SOTF function has a set time delay. The Under Time function, which has 2nd harmonic restrain blocking, will give operation from step 4. The 2nd harmonic restrain will prevent unwanted function in case of transformer inrush current. The Under Time function has a set time delay.

Below the settings for switch on to fault logics are described.

SOTF operation mode: This parameter can be set: *Disabled/SOTF/Under Time/SOTF +Under Time*.

SOTFSel: This setting will select the signal to activate SOTF function; *CB position open/ CB position closed/CB close command*.

tSOTF: Time delay for operation of the SOTF function. The setting range is 0.000 - 60.000 s in step of 0.001 s. The default setting is 0.100 s

StepForSOTF: If this parameter is set on the step 3 pickup signal will be used as current set level. If set disabled step 2 pickup signal will be used as current set level.

t4U: Time interval when the SOTF function is active after breaker closing. The setting range is 0.000 - 60.000 s in step of 0.001 s. The default setting is 1.000 s.

ActUndrTimeSel: Describes the mode to activate the sensitive undertime function. The function can be activated by Circuit breaker position (change) or Circuit breaker command.

tUnderTime: Time delay for operation of the sensitive undertime function. The setting range is 0.000 - 60.000 s in step of 0.001 s. The default setting is 0.300 s

3.6.2.2 Setting parameters

Table 33: EF4PTOC (51N67N) Group settings (basic)

Name	Values (Range)	Unit	Step	Default	Description
Operation	Disabled Enabled	-	-	Disabled	Disable/Enable Operation
IBase	1 - 99999	A	1	3000	Base value for current settings
VBase	0.05 - 2000.00	kV	0.05	400	Base value for voltage settings
AngleRCA	-180 - 180	Deg	1	65	Relay characteristic angle (RCA)
polMethod	Voltage Current Dual	-	-	Voltage	Type of polarization
VPolMin	1 - 100	%VB	1	1	Minimum voltage level for polarization in % of VBase
IPolMin	2 - 100	%IB	1	5	Minimum current level for polarization in % of IBase
RNPol	0.50 - 1000.00	ohm	0.01	5.00	Real part of source Z to be used for current polarisation
XNPol	0.50 - 3000.00	ohm	0.01	40.00	Imaginary part of source Z to be used for current polarisation
INDirPU	1 - 100	%IB	1	10	Residual current level for directional element in % of IBase
2ndHarmStab	5 - 100	%	1	20	Second harmonic restrain operation in % of IN magnitude
BlkParTransf	Disabled Enabled	-	-	Disabled	Enable blocking at parallel transformers
Use_PUValue	ST1 ST2 ST3 ST4	-	-	ST4	Current pickup blocking at parallel transf (step1, 2, 3 or 4)
SOTF	Disabled SOTF UnderTime SOTF&UnderTime	-	-	Disabled	SOTF operation mode (Off/SOTF/Undertime/ SOTF&Undertime)
SOTFSel	Open Closed CloseCommand	-	-	Open	Select signal that shall activate SOTF
StepForSOTF	Step 2 Step 3	-	-	Step 2	Selection of step used for SOTF
EnHarmRestSOTF	Disabled Enabled	-	-	Disabled	Enable harmonic restrain function in SOTF
tSOTF	0.000 - 60.000	s	0.001	0.200	Time delay for SOTF
t4U	0.000 - 60.000	s	0.001	1.000	Switch-onto-fault active time
ActUndrTimeSel	CB position CB command	-	-	CB position	Select signal to activate under time (CB Pos/ CBCommand)
tUnderTime	0.000 - 60.000	s	0.001	0.300	Time delay for under time

Table continues on next page

Name	Values (Range)	Unit	Step	Default	Description
DirModeSel1	Disabled Non-directional Forward Reverse	-	-	Non-directional	Directional mode of step 1 (Disabled, Nondir, Forward, Reverse)
Characterist1	ANSI Ext. inv. ANSI Very inv. ANSI Norm. inv. ANSI Mod. inv. ANSI Def. Time L.T.E. inv. L.T.V. inv. L.T. inv. IEC Norm. inv. IEC Very inv. IEC inv. IEC Ext. inv. IEC S.T. inv. IEC L.T. inv. IEC Def. Time Reserved Programmable RI type RD type	-	-	ANSI Def. Time	Time delay curve type for step 1
Pickup1	1 - 2500	%IB	1	100	Residual current pickup for step 1 in % of IBase
t1	0.000 - 60.000	s	0.001	0.000	Independent (defenite) time delay of step 1
TD1	0.05 - 999.00	-	0.01	0.05	Time multiplier for the dependent time delay for step 1
IMin1	1.00 - 10000.00	%IB	1.00	100.00	Minimum current for step 1
t1Min	0.000 - 60.000	s	0.001	0.000	Minimum operate time for inverse curves for step 1
MultPU1	1.0 - 10.0	-	0.1	2.0	Multiplier for scaling the current setting value for step 1
ResetTypeCrv1	Instantaneous IEC Reset ANSI reset	-	-	Instantaneous	Reset curve type for step 1
tReset1	0.000 - 60.000	s	0.001	0.020	Reset time delay for step 1
HarmRestrain1	Disabled Enabled	-	-	Enabled	Enable block of step 1 from harmonic restrain
tPCrv1	0.005 - 3.000	-	0.001	1.000	Parameter P for customer programmable curve for step 1
tACrv1	0.005 - 200.000	-	0.001	13.500	Parameter A for customer programmable curve for step 1
tBCrv1	0.00 - 20.00	-	0.01	0.00	Parameter B for customer programmable curve for step 1
tCCrv1	0.1 - 10.0	-	0.1	1.0	Parameter C for customer programmable curve for step 1
tPRCrv1	0.005 - 3.000	-	0.001	0.500	Parameter PR for customer programmable curve for step 1

Table continues on next page

Name	Values (Range)	Unit	Step	Default	Description
tTRCrv1	0.005 - 100.000	-	0.001	13.500	Parameter TR for customer programmable curve for step 1
tCRCrv1	0.1 - 10.0	-	0.1	1.0	Parameter CR for customer programmable curve for step 1
DirModeSel2	Disabled Non-directional Forward Reverse	-	-	Non-directional	Directional mode of step 2 (Disabled, Nondir, Forward, Reverse)
Characterist2	ANSI Ext. inv. ANSI Very inv. ANSI Norm. inv. ANSI Mod. inv. ANSI Def. Time L.T.E. inv. L.T.V. inv. L.T. inv. IEC Norm. inv. IEC Very inv. IEC inv. IEC Ext. inv. IEC S.T. inv. IEC L.T. inv. IEC Def. Time Reserved Programmable RI type RD type	-	-	ANSI Def. Time	Time delay curve type for step 2
Pickup2	1 - 2500	%IB	1	50	Residual current pickup for step 2 in % of IBase
t2	0.000 - 60.000	s	0.001	0.400	Independent (definitive) time delay of step 2
TD2	0.05 - 999.00	-	0.01	0.05	Time multiplier for the dependent time delay for step 2
IMin2	1.00 - 10000.00	%IB	1.00	50	Minimum current for step 2
t2Min	0.000 - 60.000	s	0.001	0.000	Minimum operate time for inverse curves step 2
MultPU2	1.0 - 10.0	-	0.1	2.0	Multiplier for scaling the current setting value for step 2
ResetTypeCrv2	Instantaneous IEC Reset ANSI reset	-	-	Instantaneous	Reset curve type for step 2
tReset2	0.000 - 60.000	s	0.001	0.020	Reset time delay for step 2
HarmRestrain2	Disabled Enabled	-	-	Enabled	Enable block of step 2 from harmonic restrain
tPCrv2	0.005 - 3.000	-	0.001	1.000	Parameter P for customer programmable curve for step 2
tACrv2	0.005 - 200.000	-	0.001	13.500	Parameter A for customer programmable curve for step 2
tBCrv2	0.00 - 20.00	-	0.01	0.00	Parameter B for customer programmable curve for step 2

Table continues on next page

Name	Values (Range)	Unit	Step	Default	Description
tCCrv2	0.1 - 10.0	-	0.1	1.0	Parameter C for customer programmable curve for step 2
tPRCrv2	0.005 - 3.000	-	0.001	0.500	Parameter PR for customer programmable curve for step 2
tTRCrv2	0.005 - 100.000	-	0.001	13.500	Parameter TR for customer programmable curve for step 2
tCRCrv2	0.1 - 10.0	-	0.1	1.0	Parameter CR for customer programmable curve for step 2
DirModeSel3	Disabled Non-directional Forward Reverse	-	-	Non-directional	Directional mode of step 3 (Disabled, Nondir, Forward, Reverse)
Characterist3	ANSI Ext. inv. ANSI Very inv. ANSI Norm. inv. ANSI Mod. inv. ANSI Def. Time L.T.V. inv. L.T. inv. IEC Norm. inv. IEC Very inv. IEC inv. IEC Ext. inv. IEC S.T. inv. IEC L.T. inv. IEC Def. Time Reserved Programmable RI type RD type	-	-	ANSI Def. Time	Time delay curve type for step 3
Pickup3	1 - 2500	%IB	1	33	Residual current pickup for step 3 in % of IBase
t3	0.000 - 60.000	s	0.001	0.800	Independent time delay of step 3
TD3	0.05 - 999.00	-	0.01	0.05	Time multiplier for the dependent time delay for step 3
IMin3	1.00 - 10000.00	%IB	1.00	33	Minimum current for step 3
t3Min	0.000 - 60.000	s	0.001	0.000	Minimum operate time for inverse curves for step 3
MultPU3	1.0 - 10.0	-	0.1	2.0	Multiplier for scaling the current setting value for step 3
ResetTypeCrv3	Instantaneous IEC Reset ANSI reset	-	-	Instantaneous	Reset curve type for step 3
tReset3	0.000 - 60.000	s	0.001	0.020	Reset time delay for step 3
HarmRestrain3	Disabled Enabled	-	-	Enabled	Enable block of step 3 from harmonic restrain
tPCrv3	0.005 - 3.000	-	0.001	1.000	Parameter P for customer programmable curve for step 3
tACrv3	0.005 - 200.000	-	0.001	13.500	Parameter A for customer programmable curve for step 3

Table continues on next page

Name	Values (Range)	Unit	Step	Default	Description
tBCrv3	0.00 - 20.00	-	0.01	0.00	Parameter B for customer programmable curve for step 3
tCCrv3	0.1 - 10.0	-	0.1	1.0	Parameter C for customer programmable curve step 3
tPRCrv3	0.005 - 3.000	-	0.001	0.500	Parameter PR for customer programmable curve step 3
tTRCrv3	0.005 - 100.000	-	0.001	13.500	Parameter TR for customer programmable curve step 3
tCRCrv3	0.1 - 10.0	-	0.1	1.0	Parameter CR for customer programmable curve for step 3
DirModeSel4	Disabled Non-directional Forward Reverse	-	-	Non-directional	Directional mode of step 4 (Disabled, Nondir, Forward, Reverse)
Characterist4	ANSI Ext. inv. ANSI Very inv. ANSI Norm. inv. ANSI Mod. inv. ANSI Def. Time L.T.E. inv. L.T.V. inv. L.T. inv. IEC Norm. inv. IEC Very inv. IEC inv. IEC Ext. inv. IEC S.T. inv. IEC L.T. inv. IEC Def. Time Reserved Programmable RI type RD type	-	-	ANSI Def. Time	Time delay curve type for step 4
Pickup4	1 - 2500	%IB	1	17	Residual current pickup for step 4 in % of IBase
t4	0.000 - 60.000	s	0.001	1.200	Independent (definitive) time delay of step 4
TD4	0.05 - 999.00	-	0.01	0.05	Time multiplier for the dependent time delay for step 4
IMin4	1.00 - 10000.00	%IB	1.00	17	Minimum current for step 4
t4Min	0.000 - 60.000	s	0.001	0.000	Minimum operate time in inverse curves step 4
MultPU4	1.0 - 10.0	-	0.1	2.0	Multiplier for scaling the current setting value for step 4
ResetTypeCrv4	Instantaneous IEC Reset ANSI reset	-	-	Instantaneous	Reset curve type for step 4
tReset4	0.000 - 60.000	s	0.001	0.020	Reset time delay for step 4
HarmRestrain4	Disabled Enabled	-	-	Enabled	Enable block of step 4 from harmonic restrain
tPCrv4	0.005 - 3.000	-	0.001	1.000	Parameter P for customer programmable curve for step 4

Table continues on next page

Name	Values (Range)	Unit	Step	Default	Description
tACrv4	0.005 - 200.000	-	0.001	13.500	Parameter A for customer programmable curve step 4
tBCrv4	0.00 - 20.00	-	0.01	0.00	Parameter B for customer programmable curve for step 4
tCCrv4	0.1 - 10.0	-	0.1	1.0	Parameter C for customer programmable curve step 4
tPRCrv4	0.005 - 3.000	-	0.001	0.500	Parameter PR for customer programmable curve step 4
tTRCrv4	0.005 - 100.000	-	0.001	13.500	Parameter TR for customer programmable curve step 4
tCRCrv4	0.1 - 10.0	-	0.1	1.0	Parameter CR for customer programmable curve step 4

3.6.3 Four step directional negative phase sequence overcurrent protection NS4PTOC (46I2)

Function description	IEC 61850 identification	IEC 60617 identification	ANSI/IEEE C37.2 device number
Four step negative sequence overcurrent protection	NS4PTOC	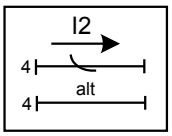	46I2

3.6.3.1 Application

Four step negative sequence overcurrent protection NS4PTOC (4612) is used in several applications in the power system. Some applications are:

- Ground-fault and phase-phase short circuit protection of feeders in effectively grounded distribution and subtransmission systems. Normally these feeders have radial structure.
- Back-up ground-fault and phase-phase short circuit protection of transmission lines.
- Sensitive ground-fault protection of transmission lines. NS4PTOC (4612) can have better sensitivity to detect resistive phase-to-ground-faults compared to distance protection.
- Back-up ground-fault and phase-phase short circuit protection of power transformers.
- Ground-fault and phase-phase short circuit protection of different kinds of equipment connected to the power system such as shunt capacitor banks, shunt reactors and others.

In many applications several steps with different current pickup levels and time delays are needed. NS4PTOC (4612) can have up to four, individual settable steps. The flexibility of each step of NS4PTOC (4612) function is great. The following options are possible:

Non-directional/Directional function: In some applications the non-directional functionality is used. This is mostly the case when no fault current can be fed from the protected object itself. In order to achieve both selectivity and fast fault clearance, the directional function can be necessary. This can be the case for unsymmetrical fault protection in meshed and effectively grounded transmission systems. The directional negative sequence overcurrent protection is also well suited to operate in teleprotection communication schemes, which enables fast clearance of unsymmetrical faults on transmission lines. The directional function uses the polarizing quantity as decided by setting. Voltage polarizing is most commonly used but alternatively dual polarizing, where the sum of both voltage and current components is allowed to polarize, can also be selected.

Choice of time characteristics: There are several types of time characteristics available such as definite time delay and different types of inverse time characteristics. The selectivity between different overcurrent protections is normally enabled by co-ordination between the operating time of the different protections. To enable optimal co-ordination all overcurrent relays, to be co-ordinated against each other, should have the same time characteristic. Therefore a wide range of standardized inverse time characteristics are available: IEC and ANSI.

Table 34: Inverse time characteristics

Curve name
ANSI Extremely Inverse
ANSI Very Inverse
ANSI Normal Inverse
ANSI Moderately Inverse
ANSI/IEEE Definite time
ANSI Long Time Extremely Inverse
ANSI Long Time Very Inverse
ANSI Long Time Inverse
IEC Normal Inverse
IEC Very Inverse
IEC Inverse
IEC Extremely Inverse
IEC Short Time Inverse
IEC Long Time Inverse
Table continues on next page

Curve name
IEC Definite Time
User Programmable
ASEA RI
RXIDG (logarithmic)

There is also a user programmable inverse time characteristic.

Normally it is required that the negative sequence overcurrent function shall reset as fast as possible when the current level gets lower than the operation level. In some cases some sort of delayed reset is required. Therefore different kinds of reset characteristics can be used.

For some protection applications there can be a need to change the current pickup level for some time. Therefore there is a possibility to give a setting of a multiplication factor *MultPUx* to the negative sequence current pick-up level. This multiplication factor is activated from a binary input signal MULTPUx to the function.

3.6.3.2 Setting guidelines

The parameters for Four step negative sequence overcurrent protection NS4PTOC (46I2) are set via the local HMI or Protection and Control Manager (PCM600).

The following settings can be done for the four step negative sequence overcurrent protection:

Operation: Sets the protection to *Enabled* or *Disabled*.

IBase: Base current in primary A. This current is used as reference for current setting. It can be suitable to set this parameter to the rated primary current of the protected object where the current measurement is made.

VBase: Base voltage level in kV. This voltage is given as a phase-to-phase voltage and this is the reference for voltage related settings of the function. This voltage is internally divided by √3.

When inverse time overcurrent characteristic is selected, the operate time of the stage will be the sum of the inverse time delay and the set definite time delay. Thus, if only the inverse time delay is required, it is of utmost importance to set the definite time delay for that stage to zero.

Settings for each step

x means step 1, 2, 3 and 4.

DirModeSelx: The directional mode of step x. Possible settings are off/nondirectional/ forward/reverse.

Characteristx: Selection of time characteristic for step *x*. Definite time delay and different types of inverse time characteristics are available.

Table 35: Inverse time characteristics

Curve name
ANSI Extremely Inverse
ANSI Very Inverse
ANSI Normal Inverse
ANSI Moderately Inverse
ANSI/IEEE Definite time
ANSI Long Time Extremely Inverse
ANSI Long Time Very Inverse
ANSI Long Time Inverse
IEC Normal Inverse
IEC Very Inverse
IEC Inverse
IEC Extremely Inverse
IEC Short Time Inverse
IEC Long Time Inverse
IEC Definite Time
User Programmable
ASEA RI
RXIDG (logarithmic)

The different characteristics are described in the Technical Reference Manual (TRM).

Pickupx: Operation negative sequence current level for step x given in % of *IBase*.

tx: Definite time delay for step x. Used if definite time characteristic is chosen.

TDx: Time multiplier for the dependent (inverse) characteristic.

IMinx: Minimum operate current for step x in % of IBase. Set *IMinx* below *Pickupx* for every step to achieve ANSI reset characteristic according to standard. If *IMinx* is set above *Pickupx* for any step the ANSI reset works as if current is zero when current drops below *IMinx*.

MultPUx: Multiplier for scaling of the current setting value. If a binary input signal (ENMULTx) is activated the current operation level is multiplied by this setting constant.

txMin: Minimum operation time for inverse time characteristics. At high currents the inverse time characteristic might give a very short operation time. By setting this parameter the operation time of the step can never be shorter than the setting.

ResetTypeCrvx: The reset of the delay timer can be made in different ways. By choosing setting there are the following possibilities:

Curve name
Instantaneous
IEC Reset (constant time)
ANSI Reset (inverse time)

The different reset characteristics are described in the Technical Reference Manual (TRM). There are some restrictions regarding the choice of reset delay.

For the independent time delay characteristics the possible delay time settings are instantaneous (1) and IEC (2 = set constant time reset).

For ANSI inverse time delay characteristics all three types of reset time characteristics are available; instantaneous (1), IEC (2 = set constant time reset) and ANSI (3 = current dependent reset time).

For IEC inverse time delay characteristics the possible delay time settings are instantaneous (1) and IEC (2 = set constant time reset).

For the programmable inverse time delay characteristics all three types of reset time characteristics are available; instantaneous (1), IEC (2 = set constant time reset) and ANSI (3 = current dependent reset time). If the current dependent type is used settings *pr*, *tr* and *cr* must be given.

tPCrvx, *tACrvx*, *tBCrvx*, *tCCrvx*: Parameters for programmable inverse time characteristic curve (Curve type = 17). The time characteristic equation is according to equation 20:

$$t[s] = \left(\frac{A}{\left(\frac{i}{ipickup} \right)^{p} - C} + B \right) \cdot TD$$

(Equation 21)

Further description can be found in the Technical reference manual (TRM).

tPRCrvx, tTRCrvx, tCRCrvx: Parameters for programmable inverse reset time characteristic curve. Further description can be found in the Technical reference manual (TRM).

Common settings for all steps

x means step 1, 2, 3 and 4.

AngleRCA: Relay characteristic angle given in degrees. This angle is defined as shown in figure 29. The angle is defined positive when the residual current lags the reference voltage (Vpol = -)

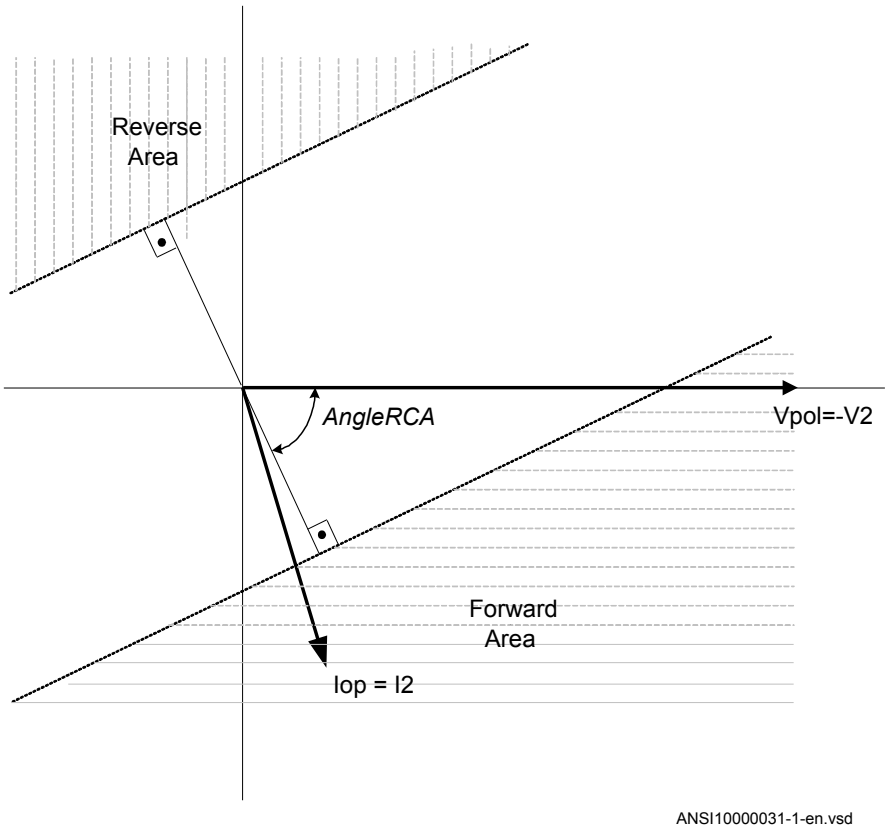

Figure 31: Relay characteristic angle given in degree

In a transmission network a normal value of RCA is about 80°.

VPolMin: Minimum polarization (reference) voltage % of *VBase*.

I>Dir: Operate residual current level for directional comparison scheme. The setting is given in % of *IBase*. The pickup forward or pickup reverse signals can be used in a communication scheme. The appropriate signal must be configured to the communication scheme block.

3.6.3.3 Setting parameters

Table 36: NS4PTOC (46I2) Group settings (basic)

Name	Values (Range)	Unit	Step	Default	Description
Operation	Disabled Enabled	-	-	Disabled	Disable/Enable Operation
IBase	1 - 99999	A	1	3000	Base value for current settings
VBase	0.05 - 2000.00	kV	0.05	400	Base value for voltage settings
Table continues on next page					

Name	Values (Range)	Unit	Step	Default	Description
AngleRCA	-180 - 180	Deg	1	65	Relay characteristic angle (RCA)
polMethod	Voltage Dual	-	-	Voltage	Type of polarization
VPolMin	1 - 100	%VB	1	5	Minimum voltage level for polarization in % of VBase
IPolMin	2 - 100	%IB	1	5	Minimum current level for polarization in % of IBase
RPol	0.50 - 1000.00	ohm	0.01	5.00	Real part of neg. seq. source imp. to be used for current polarisation
XPol	0.50 - 3000.00	ohm	0.01	40.00	Imaginary part of neg. seq. source imp. to be used for current polarisation
I>Dir	1 - 100	%IB	1	10	Neg. seq. curr. I2 level for Direction release in % of IBase
DirModeSel1	Disabled Non-directional Forward Reverse	-	-	Non-directional	Directional mode of step 1 (Disabled, Nondir, Forward, Reverse)
Characterist1	ANSI Ext. inv. ANSI Very inv. ANSI Norm. inv. ANSI Mod. inv. ANSI Def. Time L.T.E. inv. L.T.V. inv. L.T. inv. IEC Norm. inv. IEC Very inv. IEC inv. IEC Ext. inv. IEC S.T. inv. IEC L.T. inv. IEC Def. Time Reserved Programmable RI type RD type	-	-	ANSI Def. Time	Time delay curve type for step 1
Pickup1	1 - 2500	%IB	1	100	Operate neg. seq. curr. I2 level for step 1 in % of IBase
t1	0.000 - 60.000	s	0.001	0.000	Independent (defenite) time delay of step 1
TD1	0.05 - 999.00	-	0.01	0.05	Time multiplier for the dependent time delay for step 1
IMin1	1.00 - 10000.00	%IB	1.00	100.00	Minimum current for step 1
t1Min	0.000 - 60.000	s	0.001	0.000	Minimum operate time for inverse curves for step 1
MultPU1	1.0 - 10.0	-	0.1	2.0	Multiplier for scaling the current setting value for step 1
ResetTypeCrv1	Instantaneous IEC Reset ANSI reset	-	-	Instantaneous	Reset curve type for step 1

Table continues on next page

Name	Values (Range)	Unit	Step	Default	Description
tReset1	0.000 - 60.000	s	0.001	0.020	Reset time delay for step 1
tPCrv1	0.005 - 3.000	-	0.001	1.000	Parameter P for customer programmable curve for step 1
tACrv1	0.005 - 200.000	-	0.001	13.500	Parameter A for customer programmable curve for step 1
tBCrv1	0.00 - 20.00	-	0.01	0.00	Parameter B for customer programmable curve for step 1
tCCrv1	0.1 - 10.0	-	0.1	1.0	Parameter C for customer programmable curve for step 1
tPRCrv1	0.005 - 3.000	-	0.001	0.500	Parameter PR for customer programmable curve for step 1
tTRCrv1	0.005 - 100.000	-	0.001	13.500	Parameter TR for customer programmable curve for step 1
tCRCrv1	0.1 - 10.0	-	0.1	1.0	Parameter CR for customer programmable curve for step 1
DirModeSel2	Disabled Non-directional Forward Reverse	-	-	Non-directional	Directional mode of step 2 (Disabled, Nondir, Forward, Reverse)
Characterist2	ANSI Ext. inv. ANSI Very inv. ANSI Norm. inv. ANSI Mod. inv. ANSI Def. Time L.T.E. inv. L.T.V. inv. L.T. inv. IEC Norm. inv. IEC Very inv. IEC inv. IEC Ext. inv. IEC S.T. inv. IEC L.T. inv. IEC Def. Time Reserved Programmable RI type RD type	-	-	ANSI Def. Time	Time delay curve type for step 2
Pickup2	1 - 2500	%IB	1	50	Operate neg. seq. curr. I2 level for step 2 in % of IBase
t2	0.000 - 60.000	s	0.001	0.400	Independent (definitive) time delay of step 2
TD2	0.05 - 999.00	-	0.01	0.05	Time multiplier for the dependent time delay for step 2
IMin2	1.00 - 10000.00	%IB	1.00	50	Minimum current for step 2
t2Min	0.000 - 60.000	s	0.001	0.000	Minimum operate time for inverse curves step 2
MultPU2	1.0 - 10.0	-	0.1	2.0	Multiplier for scaling the current setting value for step 2

Table continues on next page

Name	Values (Range)	Unit	Step	Default	Description
ResetTypeCrv2	Instantaneous IEC Reset ANSI reset	-	-	Instantaneous	Reset curve type for step 2
tReset2	0.000 - 60.000	s	0.001	0.020	Reset time delay for step 2
tPCrv2	0.005 - 3.000	-	0.001	1.000	Parameter P for customer programmable curve for step 2
tACrv2	0.005 - 200.000	-	0.001	13.500	Parameter A for customer programmable curve for step 2
tBCrv2	0.00 - 20.00	-	0.01	0.00	Parameter B for customer programmable curve for step 2
tCCrv2	0.1 - 10.0	-	0.1	1.0	Parameter C for customer programmable curve for step 2
tPRCrv2	0.005 - 3.000	-	0.001	0.500	Parameter PR for customer programmable curve for step 2
tTRCrv2	0.005 - 100.000	-	0.001	13.500	Parameter TR for customer programmable curve for step 2
tCRCrv2	0.1 - 10.0	-	0.1	1.0	Parameter CR for customer programmable curve for step 2
DirModeSel3	Disabled Non-directional Forward Reverse	-	-	Non-directional	Directional mode of step 3 (Disabled, Nondir, Forward, Reverse)
Characterist3	ANSI Ext. inv. ANSI Very inv. ANSI Norm. inv. ANSI Mod. inv. ANSI Def. Time L.T.V. inv. L.T. inv. IEC Norm. inv. IEC Very inv. IEC inv. IEC Ext. inv. IEC S.T. inv. IEC L.T. inv. IEC Def. Time Reserved Programmable RI type RD type	-	-	ANSI Def. Time	Time delay curve type for step 3
Pickup3	1 - 2500	%IB	1	33	Operate neg. seq. curr. I2 level for step 3 in % of IBase
t3	0.000 - 60.000	s	0.001	0.800	Independent time delay of step 3
TD3	0.05 - 999.00	-	0.01	0.05	Time multiplier for the dependent time delay for step 3
IMin3	1.00 - 10000.00	%IB	1.00	33	Minimum current for step 3
t3Min	0.000 - 60.000	s	0.001	0.000	Minimum operate time for inverse curves for step 3

Table continues on next page

Name	Values (Range)	Unit	Step	Default	Description
MultPU3	1.0 - 10.0	-	0.1	2.0	Multiplier for scaling the current setting value for step 3
ResetTypeCrv3	Instantaneous IEC Reset ANSI reset	-	-	Instantaneous	Reset curve type for step 3
tReset3	0.000 - 60.000	s	0.001	0.020	Reset time delay for step 3
tPCrv3	0.005 - 3.000	-	0.001	1.000	Parameter P for customer programmable curve for step 3
tACrv3	0.005 - 200.000	-	0.001	13.500	Parameter A for customer programmable curve for step 3
tBCrv3	0.00 - 20.00	-	0.01	0.00	Parameter B for customer programmable curve for step 3
tCCrv3	0.1 - 10.0	-	0.1	1.0	Parameter C for customer programmable curve step 3
tPRCrv3	0.005 - 3.000	-	0.001	0.500	Parameter PR for customer programmable curve step 3
tTRCrv3	0.005 - 100.000	-	0.001	13.500	Parameter TR for customer programmable curve step 3
tCRCrv3	0.1 - 10.0	-	0.1	1.0	Parameter CR for customer programmable curve for step 3
DirModeSel4	Disabled Non-directional Forward Reverse	-	-	Non-directional	Directional mode of step 4 (Disabled, Nondir, Forward, Reverse)
Characterist4	ANSI Ext. inv. ANSI Very inv. ANSI Norm. inv. ANSI Mod. inv. ANSI Def. Time L.T.E. inv. L.T.V. inv. L.T. inv. IEC Norm. inv. IEC Very inv. IEC inv. IEC Ext. inv. IEC S.T. inv. IEC L.T. inv. IEC Def. Time Reserved Programmable RI type RD type	-	-	ANSI Def. Time	Time delay curve type for step 4
Pickup4	1 - 2500	%IB	1	17	Operate neg. seq. curr. I2 level for step 4 in % of IBase
t4	0.000 - 60.000	s	0.001	1.200	Independent (definitive) time delay of step 4
TD4	0.05 - 999.00	-	0.01	0.05	Time multiplier for the dependent time delay for step 4
IMin4	1.00 - 10000.00	%IB	1.00	17	Minimum current for step 4

Table continues on next page

Name	Values (Range)	Unit	Step	Default	Description
t4Min	0.000 - 60.000	s	0.001	0.000	Minimum operate time in inverse curves step 4
MultPU4	1.0 - 10.0	-	0.1	2.0	Multiplier for scaling the current setting value for step 4
ResetTypeCrv4	Instantaneous IEC Reset ANSI reset	-	-	Instantaneous	Reset curve type for step 4
tReset4	0.000 - 60.000	s	0.001	0.020	Reset time delay for step 4
tPCrv4	0.005 - 3.000	-	0.001	1.000	Parameter P for customer programmable curve for step 4
tACrv4	0.005 - 200.000	-	0.001	13.500	Parameter A for customer programmable curve step 4
tBCrv4	0.00 - 20.00	-	0.01	0.00	Parameter B for customer programmable curve for step 4
tCCrv4	0.1 - 10.0	-	0.1	1.0	Parameter C for customer programmable curve step 4
tPRCrv4	0.005 - 3.000	-	0.001	0.500	Parameter PR for customer programmable curve step 4
tTRCrv4	0.005 - 100.000	-	0.001	13.500	Parameter TR for customer programmable curve step 4
tCRCrv4	0.1 - 10.0	-	0.1	1.0	Parameter CR for customer programmable curve step 4

3.6.4 Sensitive directional residual overcurrent and power protection SDEPSDE (67N)

Function description	IEC 61850 identification	IEC 60617 identification	ANSI/IEEE C37.2 device number
Sensitive directional residual over current and power protection	SDEPSDE	-	67N

3.6.4.1 Application

In networks with high impedance grounding, the phase-to-ground fault current is significantly smaller than the short circuit currents. Another difficulty for ground-fault protection is that the magnitude of the phase-to-ground fault current is almost independent of the fault location in the network.

Directional residual current can be used to detect and give selective trip of phase-to-ground faults in high impedance grounded networks. The protection uses the residual current component $3I_0 \cdot \cos \varphi$, where φ is the angle between the residual current and

the residual voltage ($-3V_0$), compensated with a characteristic angle. Alternatively, the function can be set to strict $3I_0$ level with a check of angle $3I_0$ and cos φ.

Directional residual power can also be used to detect and give selective trip of phase-to-ground faults in high impedance grounded networks. The protection uses the residual power component $3I_0 \cdot 3V_0 \cdot \cos \varphi$, where φ is the angle between the residual current and the reference residual voltage, compensated with a characteristic angle.

A normal non-directional residual current function can also be used with definite or inverse time delay.

A back-up neutral point voltage function is also available for non-directional sensitive back-up protection.

In an isolated network, that is, the network is only coupled to ground via the capacitances between the phase conductors and ground, the residual current always has -90º phase shift compared to the reference residual voltage. The characteristic angle is chosen to -90º in such a network.

In resistance grounded networks or in Petersen coil grounded, with a parallel resistor, the active residual current component (in phase with the residual voltage) should be used for the ground-fault detection. In such networks the characteristic angle is chosen to 0º.

As the magnitude of the residual current is independent of the fault location the selectivity of the ground-fault protection is achieved by time selectivity.

When should the sensitive directional residual overcurrent protection be used and when should the sensitive directional residual power protection be used? Consider the following facts:

- Sensitive directional residual overcurrent protection gives possibility for better sensitivity. The setting possibilities of this function are down to 0.25 % of IBase, 1 A or 5 A. This sensitivity is in most cases sufficient in high impedance network applications, if the measuring CT ratio is not too high.
- Sensitive directional residual power protection gives possibility to use inverse time characteristics. This is applicable in large high impedance grounded networks, with large capacitive ground-fault current
- In some power systems a medium size neutral point resistor is used, for example, in low impedance grounded system. Such a resistor will give a resistive ground-fault current component of about 200 - 400 A at a zero resistive phase-to-ground fault. In such a system the directional residual power protection gives better possibilities for selectivity enabled by inverse time power characteristics.

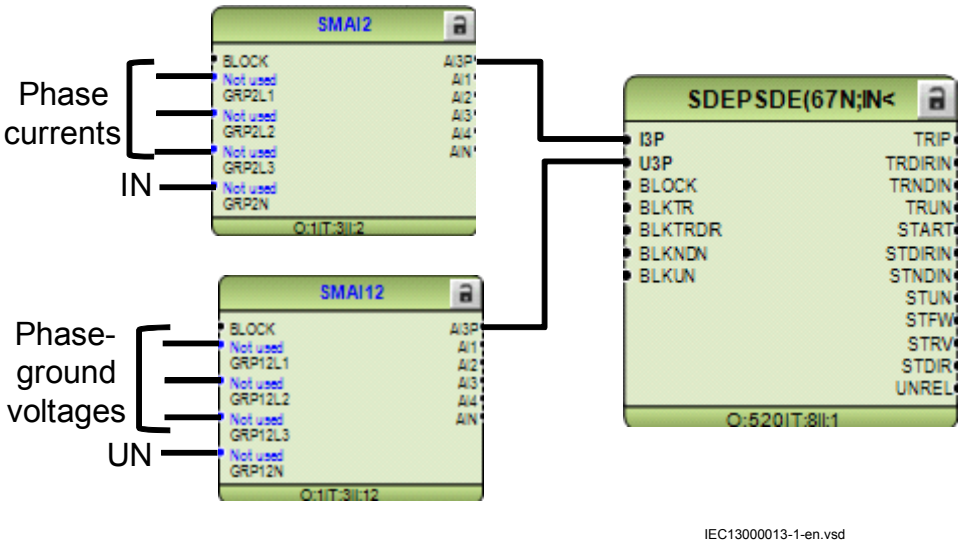

Figure 32: Connection of SDEPSDE to analog preprocessing function block

Over current functionality uses true 3I0, i.e. sum of GRPxL1, GRPxL2 and GRPxL3. For 3I0 to be calculated, connection is needed to all three phase inputs.

Directional and power functionality uses IN and UN. If a connection is made to GRPxN this signal is used, else if connection is made to all inputs GRPxL1, GRPxL2 and GRPxL3 the sum of these inputs (3I0 and 3U0) will be used.

3.6.4.2 Setting guidelines

The sensitive ground-fault protection is intended to be used in high impedance grounded systems, or in systems with resistive grounding where the neutral point resistor gives an ground-fault current larger than what normal high impedance gives but smaller than the phase to phase short circuit current.

In a high impedance system the fault current is assumed to be limited by the system zero sequence shunt impedance to ground and the fault resistance only. All the series impedances in the system are assumed to be zero.

In the setting of ground-fault protection, in a high impedance grounded system, the neutral point voltage (zero sequence voltage) and the ground-fault current will be calculated at the desired sensitivity (fault resistance). The complex neutral point voltage (zero sequence) can be calculated as:

$$V_0 = \frac{V_{phase}}{1 + \frac{3 \cdot R_f}{Z_0}}$$

(Equation 22)

Where

V_{phase} is the phase voltage in the fault point before the fault,

R_f is the resistance to ground in the fault point and

Z_0 is the system zero sequence impedance to ground

The fault current, in the fault point, can be calculated as:

$$I_j = 3I_0 = \frac{3 \cdot V_{phase}}{Z_0 + 3 \cdot R_f}$$

(Equation 23)

The impedance Z_0 is dependent on the system grounding. In an isolated system (without neutral point apparatus) the impedance is equal to the capacitive coupling between the phase conductors and ground:

$$Z_0 = -jX_c = -j\frac{3 \cdot V_{phase}}{I_j}$$

(Equation 24)

Where

I_j is the capacitive ground-fault current at a non-resistive phase to ground-fault

X_c is the capacitive reactance to ground

In a system with a neutral point resistor (resistance grounded system) the impedance Z_0 can be calculated as:

$$Z_0 = \frac{-jX_c \cdot 3R_n}{-jX_c + 3R_n}$$

(Equation 25)

Where

R_n is the resistance of the neutral point resistor

In many systems there is also a neutral point reactor (Petersen coil) connected to one or more transformer neutral points. In such a system the impedance Z_0 can be calculated as:

$$Z_0 = -jX_c \,//\, 3R_n \,//\, j3X_n = \frac{9R_n X_n X_c}{3X_n X_c + j3R_n \cdot (3X_n - X_c)}$$

(Equation 26)

Where

X_n is the reactance of the Petersen coil. If the Petersen coil is well tuned we have $3X_n = X_c$ In this case the impedance Z_0 will be: $Z_0 = 3R_n$

Now consider a system with an grounding via a resistor giving higher ground-fault current than the high impedance grounding. The series impedances in the system can no longer be neglected. The system with a single phase to ground-fault can be described as in figure 33.

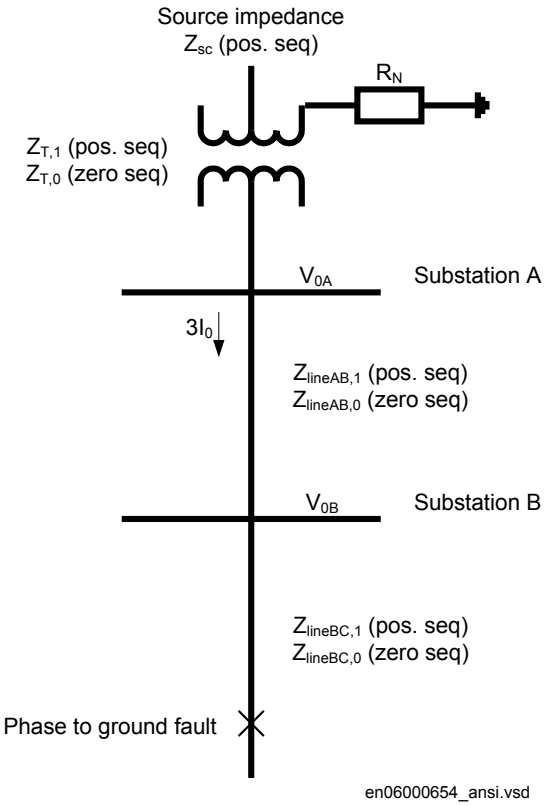

Figure 33: Equivalent of power system for calculation of setting

The residual fault current can be written:

$$3I_0 = \frac{3V_{phase}}{2 \cdot Z_1 + Z_0 + 3 \cdot R_f}$$

(Equation 27)

Where

V_{phase} is the phase voltage in the fault point before the fault

Z_1 is the total positive sequence impedance to the fault point. $Z_1 = Z_{sc}+Z_{T,1}+Z_{lineAB,1}+Z_{lineBC,1}$

Z_0 is the total zero sequence impedance to the fault point. $Z_0 = Z_{T,0}+3R_N+Z_{lineAB,0}+Z_{lineBC,0}$

R_f is the fault resistance.

The residual voltages in stations A and B can be written:

$$V_{0A} = 3I_0 \cdot (Z_{T,0} + 3R_N)$$

(Equation 28)

$$V_{OB} = 3I_0 \cdot (Z_{T,0} + 3R_N + Z_{lineAB,0})$$

(Equation 29)

The residual power, measured by the sensitive ground-fault protections in A and B will be:

$$S_{0A} = 3V_{0A} \cdot 3I_0$$

(Equation 30)

$$S_{0B} = 3V_{0B} \cdot 3I_0$$

(Equation 31)

The residual power is a complex quantity. The protection will have a maximum sensitivity in the characteristic angle RCA. The apparent residual power component in the characteristic angle, measured by the protection, can be written:

$$S_{0A,prot} = 3V_{0A} \cdot 3I_0 \cdot \cos\varphi_A$$

(Equation 32)

$$S_{0B,prot} = 3V_{0B} \cdot 3I_0 \cdot \cos\varphi_B$$

(Equation 33)

The angles φ_A and φ_B are the phase angles between the residual current and the residual voltage in the station compensated with the characteristic angle RCA.

The protection will use the power components in the characteristic angle direction for measurement, and as base for the inverse time delay.

The inverse time delay is defined as:

$$t_{inv} = \frac{TDSN \cdot (3I_0 \cdot 3V_0 \cdot \cos\phi(\text{reference}))}{3I_0 \cdot 3V_0 \cos\phi(\text{measured})}$$

(Equation 34)

The function can be set *Enabled/Disabled* with the setting of *Operation*.

The setting *IBase* gives the base current in A. Normally the primary rated current of the CT feeding the protection should be chosen.

The setting *VBase* gives the base voltage in kV. Normally the system phase to ground voltage is chosen.

The setting *SBase* gives the base voltage in kVA. Normally *IBase · VBase* is chosen.

With the setting *OpModeSel* the principle of directional function is chosen.

With *OpModeSel* set to *3I0cosfi* the current component in the direction equal to the characteristic angle*RCADir* has the maximum sensitivity. The characteristic for *RCADir* is equal to 0° is shown in figure 34.

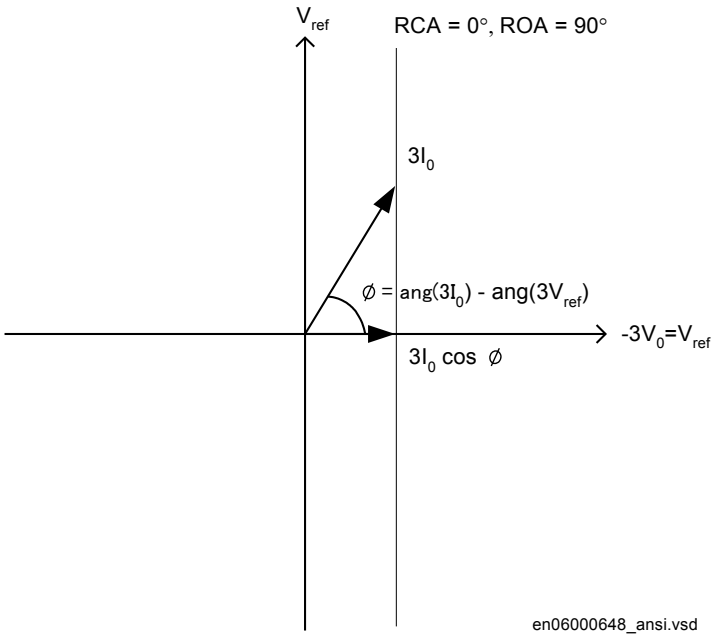

Figure 34: Characteristic for RCADir equal to 0°

The characteristic is for *RCADir* equal to -90° is shown in figure 35.

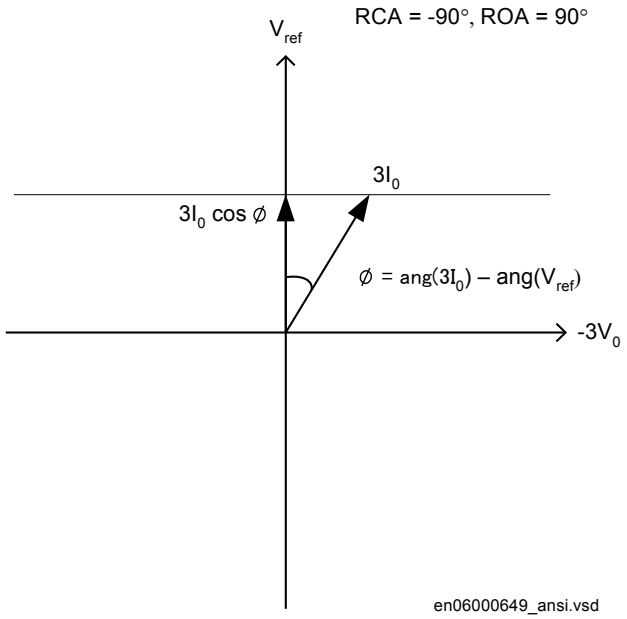

Figure 35: Characteristic for RCADir equal to -90°

When *OpModeSel* is set to *3I03V0Cosfi* the apparent residual power component in the direction is measured.

When *OpModeSel* is set to *3I0 and fi* the function will operate if the residual current is larger than the setting *INDirPU* and the residual current angle is within the sector *RCADir* ± *ROADir*.

The characteristic for *RCADir* = 0° and *ROADir* = 80° is shown in figure 36.

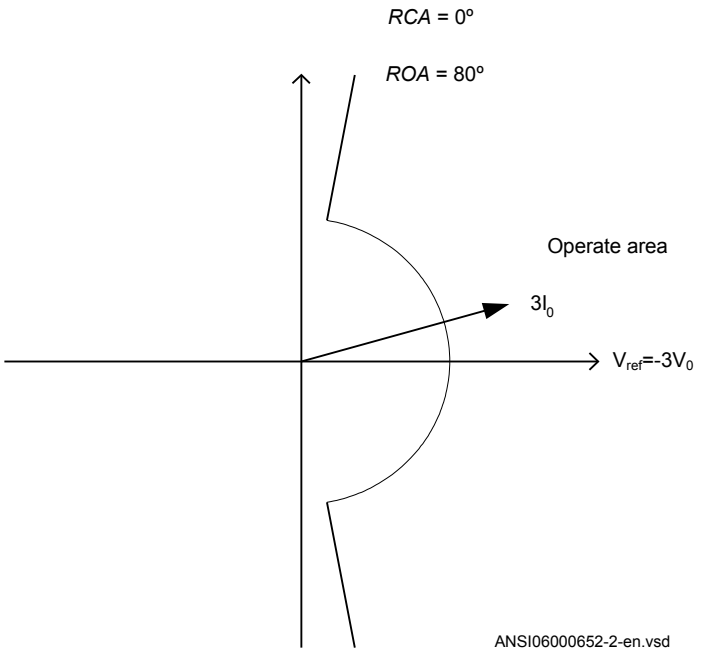

Figure 36: Characteristic for RCADir = 0° and ROADir = 80°

DirMode is set *Forward* or *Reverse* to set the direction of the trip function from the directional residual current function.

All the directional protection modes have a residual current release level setting *INRelPU* which is set in % of *IBase*. This setting should be chosen smaller than or equal to the lowest fault current to be detected.

All the directional protection modes have a residual voltage release level setting *VNRelPU* which is set in % of *VBase*. This setting should be chosen smaller than or equal to the lowest fault residual voltage to be detected.

tDef is the definite time delay, given in s, for the directional residual current protection if definite time delay is chosen.

tReset is the reset time for definite time delay, given in s. With a *tReset* time of several periods there is increased possibilities to clear intermittent ground-faults correctly. The setting shall be much shorter than the set trip delay.

The characteristic angle of the directional functions *RCADir* is set in degrees. *RCADir* is normally set equal to 0° in a high impedance grounded network with a neutral point resistor as the active current component is appearing out on the faulted feeder only. *RCADir* is set equal to -90° in an isolated network as all currents are mainly capacitive.

The relay open angle *ROADir* is set in degrees. For angles differing more than *ROADir* from*RCADir* the function from the protection is blocked. The setting can be used to

prevent unwanted function for non-faulted feeders, with large capacitive ground-fault current contributions, due to CT phase angle error.

INCosPhiPU is the operate current level for the directional function when *OpModeSel* is set *3I0Cosfi*. The setting is given in % of *IBase*. The setting should be based on calculation of the active or capacitive ground-fault current at required sensitivity of the protection.

SN_PU is the operate power level for the directional function when *OpModeSel* is set *3I03V0Cosfi*. The setting is given in % of *SBase*. The setting should be based on calculation of the active or capacitive ground-fault residual power at required sensitivity of the protection.

The input transformer for the Sensitive directional residual over current and power protection function has the same short circuit capacity as the phase current transformers.

If the time delay for residual power is chosen the delay time is dependent on two setting parameters. *SRef* is the reference residual power, given in % of *SBase*. *TDSN* is the time multiplier. The time delay will follow the following expression:

$$t_{inv} = \frac{TDSN \cdot Sref}{3I_0 \cdot 3V_0 \cdot \cos\varphi(measured)}$$

(Equation 35)

INDirPU is the operate current level for the directional function when *OpModeSel* is set *3I0 and fi*. The setting is given in % of *IBase*. The setting should be based on calculation of the ground-fault current at required sensitivity of the protection.

OpINNonDir is set *Enabled* to activate the non-directional residual current protection.

INNonDirPU is the operate current level for the non-directional function. The setting is given in % of *IBase*. This function can be used for detection and clearance of cross-country faults in a shorter time than for the directional function. The current setting should be larger than the maximum single-phase residual current out on the protected line.

TimeChar is the selection of time delay characteristic for the non-directional residual current protection. Definite time delay and different types of inverse time characteristics are available:

Table 37: Inverse time characteristics

Curve name
ANSI Extremely Inverse
ANSI Very Inverse
ANSI Normal Inverse
ANSI Moderately Inverse
ANSI/IEEE Definite time
ANSI Long Time Extremely Inverse
ANSI Long Time Very Inverse
ANSI Long Time Inverse
IEC Normal Inverse
IEC Very Inverse
IEC Inverse
IEC Extremely Inverse
IEC Short Time Inverse
IEC Long Time Inverse
IEC Definite Time
User Programmable
ASEA RI
RXIDG (logarithmic)

The different characteristics are described in Technical Manual.

tPCrv, tACrv, tBCrv, tCCrv: Parameters for customer creation of inverse time characteristic curve (Curve type = 17). The time characteristic equation is:

$$t[s] = \left(\frac{A}{\left(\frac{i}{Pickup\_N} \right)^{p} - C} + B \right) \cdot InMult$$

(Equation 36)

tINNonDir is the definite time delay for the non directional ground-fault current protection, given in s.

OpVN is set *Enabled* to activate the trip function of the residual voltage protection.

tVN is the definite time delay for the trip function of the residual voltage protection, given in s.

3.6.4.3 Setting parameters

Table 38: SDEPSDE (67N) Group settings (basic)

Name	Values (Range)	Unit	Step	Default	Description
Operation	Disabled Enabled	-	-	Disabled	Operation Disable / Enable
OpModeSel	3I0Cosfi 3I03V0Cosfi 3I0 and fi	-	-	3I0Cosfi	Selection of operation mode for protection
DirMode	Forward Reverse	-	-	Forward	Direction of operation forward or reverse
RCADir	-179 - 180	Deg	1	-90	Relay characteristic angle RCA, in deg
RCAComp	-10.0 - 10.0	Deg	0.1	0.0	Relay characteristic angle compensation
ROADir	0 - 90	Deg	1	90	Relay open angle ROA used as release in phase mode, in deg
INCosPhiPU	0.25 - 200.00	%IB	0.01	1.00	Set level for 3I0cosFi, directional res over current, in %Ib
SN_PU	0.25 - 200.00	%SB	0.01	10.00	Set level for 3I03V0cosFi, pickup inv time count, in %Sb
INDirPU	0.25 - 200.00	%IB	0.01	5.00	Set level for directional residual over current prot, in %Ib
tDef	0.000 - 60.000	s	0.001	0.100	Definite time delay directional residual overcurrent, in sec
SRef	0.03 - 200.00	%SB	0.01	10.00	Reference value of res power for inverse time count, in %Sb
TDSN	0.00 - 2.00	-	0.01	0.10	Time multiplier setting for directional residual power mode
OpINNonDir	Disabled Enabled	-	-	Disabled	Operation of non-directional residual overcurrent protection
INNonDirPU	1.00 - 400.00	%IB	0.01	10.00	Set level for non directional residual over current, in %Ib
tINNonDir	0.000 - 60.000	s	0.001	1.000	Time delay for non-directional residual over current, in sec

Table continues on next page

Name	Values (Range)	Unit	Step	Default	Description
TimeChar	ANSI Ext. inv. ANSI Very inv. ANSI Norm. inv. ANSI Mod. inv. ANSI Def. Time L.T.E. inv. L.T.V. inv. L.T. inv. IEC Norm. inv. IEC Very inv. IEC inv. IEC Ext. inv. IEC S.T. inv. IEC L.T. inv. IEC Def. Time Reserved Programmable RI type RD type	-	-	IEC Norm. inv.	Operation curve selection for IDMT operation
t_MinTripDelay	0.000 - 60.000	s	0.001	0.040	Minimum operate time for IEC IDMT curves, in sec
TDIN	0.00 - 2.00	-	0.01	1.00	IDMT time mult for non-dir res over current protection
OpVN	Disabled Enabled	-	-	Disabled	Operation of non-directional residual overvoltage protection
VN_PU	1.00 - 200.00	%VB	0.01	20.00	Set level for non-directional residual over voltage, in %Vb
tVN	0.000 - 60.000	s	0.001	0.100	Time delay for non-directional residual over voltage, in sec
INRelPU	0.25 - 200.00	%IB	0.01	1.00	Residual release current for all directional modes, in %Ib
VNRelPU	0.01 - 200.00	%VB	0.01	3.00	Residual release voltage for all direction modes, in %Vb

Table 39: SDEPSDE (67N) Group settings (advanced)

Name	Values (Range)	Unit	Step	Default	Description
tReset	0.000 - 60.000	s	0.001	0.040	Time delay used for reset of definite timers, in sec
tPCrv	0.005 - 3.000	-	0.001	1.000	Setting P for customer programmable curve
tACrv	0.005 - 200.000	-	0.001	13.500	Setting A for customer programmable curve
tBCrv	0.00 - 20.00	-	0.01	0.00	Setting B for customer programmable curve
tCCrv	0.1 - 10.0	-	0.1	1.0	Setting C for customer programmable curve
ResetTypeCrv	Immediate IEC Reset ANSI reset	-	-	IEC Reset	Reset mode when current drops off.
tPRCrv	0.005 - 3.000	-	0.001	0.500	Setting PR for customer programmable curve
tTRCrv	0.005 - 100.000	-	0.001	13.500	Setting TR for customer programmable curve
tCRCrv	0.1 - 10.0	-	0.1	1.0	Setting CR for customer programmable curve

Table 40: SDEPSDE (67N) Non group settings (basic)

Name	Values (Range)	Unit	Step	Default	Description
IBase	1 - 99999	A	1	100	Base Current, in A
VBase	0.05 - 2000.00	kV	0.05	63.50	Base Voltage, in kV Phase to Neutral
SBase	0.05 - 200000000.00	kVA	0.05	6350.00	Base Power, in kVA. IBase*Ubase

Table 41: SDEPSDE (67N) Non group settings (advanced)

Name	Values (Range)	Unit	Step	Default	Description
RotResV	0 deg 180 deg	-	-	180 deg	Setting for rotating polarizing quantity if necessary

3.6.5 Thermal overload protection, one time constant LPTTR

Function description	IEC 61850 identification	IEC 60617 identification	ANSI/IEEE C37.2 device number
Thermal overload protection, one time constant	LPTTR		26

3.6.5.1 Application

Lines and cables in the power system are designed for a certain maximum load current level. If the current exceeds this level the losses will be higher than expected. As a consequence the temperature of the conductors will increase. If the temperature of the lines and cables reaches too high values the equipment might be damaged:

- The sag of overhead lines can reach unacceptable value.
- If the temperature of conductors, for example aluminium conductors, get too high the material will be destroyed.
- In cables the insulation can be damaged as a consequence of the overtemperature. As a consequence of this phase to phase or phase to ground faults can occur

In stressed situations in the power system it can be required to overload lines and cables for a limited time. This should be done without risks.

If the temperature of the protected object reaches a set warning level *AlarmTemp*, a signal ALARM can be given to the operator. This enables actions in the power system

to be taken before dangerous temperatures are reached. If the temperature continues to increase to the trip value *TripTemp*, the protection initiates trip of the protected line.

3.6.5.2 Setting guideline

The parameters for the Thermal overload protection one time constant, Fahrenheit/ Celsius LFPTTR/LCPTTR (26) are set via the local HMI or PCM600.

The following settings can be done for the thermal overload protection.

Operation: *Disabled*/*Enabled*

IBase: Base current in primary A. This current is used as reference for current setting. It can be suitable to set this parameter to the rated primary current of the protected object.

Imult: If the protection measures one of a number of parallel line currents the number of parallel circuits is given in this setting.

IRef: Reference, steady state current, given in % of *IBase* that will give a steady state (end) temperature rise *TRef*. It is suggested to set this current to the maximum steady state current allowed for the line/cable under emergency operation (a few hours per year).

TRef: Reference temperature rise (end temperature) corresponding to the steady state current *IRef*. From cable manuals current values with corresponding conductor temperature are often given. These values are given for conditions such as ground temperature, ambient air temperature, way of laying of cable and ground thermal resistivity. From manuals for overhead conductor temperatures and corresponding current is given.

Tau: The thermal time constant of the protected circuit given in minutes. Please refer to manufacturers manuals for details.

TripTemp: Temperature value for trip of the protected circuit. For cables, a maximum allowed conductor temperature is often stated to be 190°F (88°C). For overhead lines, the critical temperature for aluminium conductor is about 190-210°F (88-99°C). For a copper conductor a normal figure is 160°F (71°C).

AlarmTemp: Temperature level for alarm of the protected circuit. ALARM signal can be used as a warning before the circuit is tripped. Therefore the setting shall be lower than the trip level. It shall at the same time be higher than the maximum conductor temperature at normal operation. For cables this level is often given to 150°F (66°C). Similar values are stated for overhead lines. A suitable setting can be about 60°F (16°C) below the trip value.

ReclTemp: Temperature where lockout signal LOCKOUT from the protection is released. When the thermal overload protection trips a lock-out signal is activated. This signal is intended to block switch in of the protected circuit as long as the conductor

temperature is high. The signal is released when the estimated temperature is below the set value. This temperature value should be chosen below the alarm temperature.

3.6.5.3 Setting parameters

Table 42: LPTTR (26) Group settings (basic)

Name	Values (Range)	Unit	Step	Default	Description
Operation	Disabled Enabled	-	-	Disabled	Disable/Enable Operation
IBase	0 - 99999	A	1	3000	Base current in A
TRef	0 - 600	Deg	1	90	End temperature rise above ambient of the line when loaded with IRef
IRef	0 - 400	%IB	1	100	The load current (in % of IBase) leading to TRef temperature
IMult	1 - 5	-	1	1	Current multiplier when function is used for two or more lines
Tau	0 - 1000	Min	1	45	Time constant of the line in minutes.
AlarmTemp	0 - 200	Deg	1	80	Temperature level for pickup (alarm)
TripTemp	0 - 600	Deg	1	90	Temperature level for trip
ReclTemp	0 - 600	Deg	1	75	Temperature for reset of lockout after trip
tPulse	0.05 - 0.30	s	0.01	0.1	Operate pulse length. Minimum one execution cycle
AmbiSens	Disabled Enabled	-	-	Disabled	External temperature sensor availiable
DefaultAmbTemp	-50 - 250	Deg	1	20	Ambient temperature used when AmbiSens is set to Off.
DefaultTemp	-50 - 600	Deg	1	50	Temperature raise above ambient temperature at startup

3.7 Voltage protection

3.7.1 Two step undervoltage protection UV2PTUV (27)

Function description	IEC 61850 identification	IEC 60617 identification	ANSI/IEEE C37.2 device number
Two step undervoltage protection	UV2PTUV	*3U<*	27

3.7.1.1 Application

Two-step undervoltage protection function (UV2PTUV ,27) is applicable in all situations, where reliable detection of low phase voltages is necessary. It is used also as a supervision and fault detection function for other protection functions, to increase the security of a complete protection system.

UV2PTUV (27) is applied to power system elements, such as generators, transformers, motors and power lines in order to detect low voltage conditions. Low voltage conditions are caused by abnormal operation or fault in the power system. UV2PTUV (27) is used in combination with overcurrent protections, either as restraint or in logic "and gates" of the trip signals issued by the two functions. Other applications are the detection of "no voltage" condition, for example, before the energization of a HV line or for automatic breaker trip in case of a blackout. UV2PTUV (27) is also used to initiate voltage correction measures, like insertion of shunt capacitor banks to compensate for reactive load and thereby increasing the voltage. The function has a high measuring accuracy and setting hysteresis to allow applications to control reactive load.

UV2PTUV (27) is used to disconnect apparatuses, like electric motors, which will be damaged when subject to service under low voltage conditions. UV2PTUV (27) deals with low voltage conditions at power system frequency, which can be caused by the following reasons:

1. Malfunctioning of a voltage regulator or wrong settings under manual control (symmetrical voltage decrease).
2. Overload (symmetrical voltage decrease).
3. Short circuits, often as phase-to-ground faults (unsymmetrical voltage decrease).

UV2PTUV (27) prevents sensitive equipment from running under conditions that could cause their overheating and thus shorten their life time expectancy. In many cases, it is a useful function in circuits for local or remote automation processes in the power system.

3.7.1.2 Setting guidelines

All the voltage conditions in the system where UV2PTUV (27) performs its functions should be considered. The same also applies to the associated equipment, its voltage and time characteristic.

There is a very wide application area where general undervoltage functions are used. All voltage related settings are made as a percentage of the settings base voltage *VBase* and base current *IBase*, which normally is set to the primary rated voltage level (phase-to-phase) of the power system or the high voltage equipment under consideration.

The setting for UV2PTUV (27) is normally not critical, since there must be enough time available for the main protection to clear short circuits andground faults.

Some applications and related setting guidelines for the voltage level are described in the following sections.

Equipment protection, such as for motors and generators

The setting must be below the lowest occurring "normal" voltage and above the lowest acceptable voltage for the equipment.

Disconnected equipment detection

The setting must be below the lowest occurring "normal" voltage and above the highest occurring voltage, caused by inductive or capacitive coupling, when the equipment is disconnected.

Power supply quality

The setting must be below the lowest occurring "normal" voltage and above the lowest acceptable voltage, due to regulation, good practice or other agreements.

Voltage instability mitigation

This setting is very much dependent on the power system characteristics, and thorough studies have to be made to find the suitable levels.

Backup protection for power system faults

The setting must be below the lowest occurring "normal" voltage and above the highest occurring voltage during the fault conditions under consideration.

Settings for Two step undervoltage protection

The following settings can be done for Two step undervoltage protection UV2PTUV (27):

ConnType: Sets whether the measurement shall be phase-to-ground fundamental value, phase-to-phase fundamental value, phase-to-ground RMS value or phase-to-phase RMS value.

Operation: *Disabled* or *Enabled*.

VBase: Base voltage phase-to-phase in primary kV. This voltage is used as reference for voltage setting. UV2PTUV (27) measures selectively phase-to-ground voltages, or phase-to-phase voltage chosen by the setting *ConnType*. The function will operate if the voltage gets lower than the set percentage of *VBase*. When *ConnType* is set to *PhN DFT* or *PhN RMS* then the IED automatically divides set value for *VBase* by √3. *VBase* is used when *ConnType* is set to *PhPh DFT* or *PhPh RMS*. Therefore, always set *VBase* as rated primary phase-to-phase voltage of the protected object. This means operation for phase-to-ground voltage under:

$$V < (\%) \cdot VBase(kV) \Big/ \sqrt{3}$$

(Equation 37)

and operation for phase-to-phase voltage under:

$$\text{Vpickup} < (\%) \cdot \text{VBase(kV)}$$

(Equation 38)

The below described setting parameters are identical for the two steps (*n* = 1 or 2). Therefore, the setting parameters are described only once.

Characteristicn: This parameter gives the type of time delay to be used. The setting can be *Definite time*, *Inverse Curve A*, *Inverse Curve B*, *Prog. inv. curve*. The selection is dependent on the protection application.

OpModen: This parameter describes how many of the three measured voltages that should be below the set level to give operation for step n. The setting can be *1 out of 3*, *2 out of 3* or *3 out of 3*. In most applications, it is sufficient that one phase voltage is low to give operation. If UV2PTUV (27) shall be insensitive for single phase-to-ground faults, *2 out of 3* can be chosen. In subtransmission and transmission networks the undervoltage function is mainly a system supervision function and 3 out of 3 is selected.

Pickupn: Set operate undervoltage operation value for step *n*, given as % of the parameter *VBase*. The setting is highly dependent of the protection application. It is essential to consider the minimum voltage at non-faulted situations. Normally this voltage is larger than 90% of nominal voltage.

tn: time delay of step *n*, given in s. This setting is dependent of the protection application. In many applications the protection function shall not directly trip when there is a short circuit or ground faults in the system. The time delay must be coordinated to the short circuit protections.

tResetn: Reset time for step *n* if definite time delay is used, given in s. The default value is 25 ms.

tnMin: Minimum operation time for inverse time characteristic for step *n*, given in s. When using inverse time characteristic for the undervoltage function during very low voltages can give a short operation time. This might lead to unselective trip. By setting *t1Min* longer than the operation time for other protections such unselective tripping can be avoided.

ResetTypeCrvn: This parameter for inverse time characteristic can be set to *Instantaneous*, *Frozen time*, *Linearly decreased*. The default setting is*Instantaneous*.

tIResetn: Reset time for step *n* if inverse time delay is used, given in s. The default value is 25 ms.

TDn: Time multiplier for inverse time characteristic. This parameter is used for coordination between different inverse time delayed undervoltage protections.

ACrvn, *BCrvn*, *CCrvn*, *DCrvn*, *PCrvn*: Parameters to set to create programmable under voltage inverse time characteristic. Description of this can be found in the technical reference manual.

CrvSatn: When the denominator in the expression of the programmable curve is equal to zero the time delay will be infinity. There will be an undesired discontinuity. Therefore, a tuning parameter *CrvSatn* is set to compensate for this phenomenon. In the voltage interval Pickup> down to *Pickup*> · (1.0 - *CrvSatn*/100) the used voltage will be: *Pickup*> · (1.0 - *CrvSatn*/100). If the programmable curve is used this parameter must be calculated so that:

$$B \cdot \frac{CrvSatn}{100} - C > 0$$

(Equation 39)

IntBlkSeln: This parameter can be set to *Disabled*, *Block of trip*, *Block all*. In case of a low voltage the undervoltage function can be blocked. This function can be used to prevent function when the protected object is switched off. If the parameter is set *Block of trip* or *Block all* unwanted trip is prevented.

IntBlkStValn: Voltage level under which the blocking is activated set in % of *VBase*. This setting must be lower than the setting *Pickupn*. As switch of shall be detected the setting can be very low, that is, about 10%.

tBlkUVn: Time delay to block the undervoltage step *n* when the voltage level is below *IntBlkStValn*, given in s. It is important that this delay is shorter than the operate time delay of the undervoltage protection step.

3.7.1.3 Setting parameters

Table 43: UV2PTUV (27) Group settings (basic)

Name	Values (Range)	Unit	Step	Default	Description
Operation	Disabled Enabled	-	-	Disabled	Disable/Enable Operation
VBase	0.05 - 2000.00	kV	0.05	400.00	Base voltage
OperationStep1	Disabled Enabled	-	-	Enabled	Enable execution of step 1

Table continues on next page

Name	Values (Range)	Unit	Step	Default	Description
Characterist1	Definite time Inverse curve A Inverse curve B Prog. inv. curve	-	-	Definite time	Selection of time delay curve type for step 1
OpMode1	1 out of 3 2 out of 3 3 out of 3	-	-	1 out of 3	Number of phases required for op (1 of 3, 2 of 3, 3 of 3) from step 1
Pickup1	1 - 100	%VB	1	70	Voltage pickup value (Definite-Time & Inverse-Time curve) in % of VBase, step 1
t1	0.00 - 6000.00	s	0.01	5.00	Definitive time delay of step 1
t1Min	0.000 - 60.000	s	0.001	5.000	Minimum operate time for inverse curves for step 1
TD1	0.05 - 1.10	-	0.01	0.05	Time multiplier for the inverse time delay for step 1
IntBlkSel1	Disabled Block of trip Block all	-	-	Disabled	Internal (low level) blocking mode, step 1
IntBlkStVal1	1 - 100	%VB	1	20	Voltage setting for internal blocking in % of VBase, step 1
tBlkUV1	0.000 - 60.000	s	0.001	0.000	Time delay of internal (low level) blocking for step 1
HystAbs1	0.0 - 100.0	%VB	0.1	0.5	Absolute hysteresis in % of VBase, step 1
OperationStep2	Disabled Enabled	-	-	Enabled	Enable execution of step 2
Characterist2	Definite time Inverse curve A Inverse curve B Prog. inv. curve	-	-	Definite time	Selection of time delay curve type for step 2
OpMode2	1 out of 3 2 out of 3 3 out of 3	-	-	1 out of 3	Number of phases required for op (1 of 3, 2 of 3, 3 of 3) from step 2
Pickup2	1 - 100	%VB	1	50	Voltage pickup value (Definite-Time & Inverse-Time curve) in % of VBase, step 2
t2	0.000 - 60.000	s	0.001	5.000	Definitive time delay of step 2
t2Min	0.000 - 60.000	s	0.001	5.000	Minimum operate time for inverse curves for step 2
TD2	0.05 - 1.10	-	0.01	0.05	Time multiplier for the inverse time delay for step 2
IntBlkSel2	Disabled Block of trip Block all	-	-	Disabled	Internal (low level) blocking mode, step 2
IntBlkStVal2	1 - 100	%VB	1	20	Voltage setting for internal blocking in % of VBase, step 2
tBlkUV2	0.000 - 60.000	s	0.001	0.000	Time delay of internal (low level) blocking for step 2
HystAbs2	0.0 - 100.0	%VB	0.1	0.5	Absolute hysteresis in % of VBase, step 2

Table 44: UV2PTUV (27) Group settings (advanced)

Name	Values (Range)	Unit	Step	Default	Description
tReset1	0.000 - 60.000	s	0.001	0.025	Reset time delay used in IEC Definite Time curve step 1
ResetTypeCrv1	Instantaneous Frozen timer Linearly decreased	-	-	Instantaneous	Selection of used IDMT reset curve type for step 1
tIReset1	0.000 - 60.000	s	0.001	0.025	Time delay in Inverse-Time reset (s), step 1
ACrv1	0.005 - 200.000	-	0.001	1.000	Parameter A for customer programmable curve for step 1
BCrv1	0.50 - 100.00	-	0.01	1.00	Parameter B for customer programmable curve for step 1
CCrv1	0.0 - 1.0	-	0.1	0.0	Parameter C for customer programmable curve for step 1
DCrv1	0.000 - 60.000	-	0.001	0.000	Parameter D for customer programmable curve for step 1
PCrv1	0.000 - 3.000	-	0.001	1.000	Parameter P for customer programmable curve for step 1
CrvSat1	0 - 100	%	1	0	Tuning param for prog. under voltage Inverse-Time curve, step 1
tReset2	0.000 - 60.000	s	0.001	0.025	Reset time delay used in IEC Definite Time curve step 2
ResetTypeCrv2	Instantaneous Frozen timer Linearly decreased	-	-	Instantaneous	Selection of Time Delay reset curve for step 2
tIReset2	0.000 - 60.000	s	0.001	0.025	Time delay in Inverse-Time reset (s), step 2
ACrv2	0.005 - 200.000	-	0.001	1.000	Parameter A for customer programmable curve for step 2
BCrv2	0.50 - 100.00	-	0.01	1.00	Parameter B for customer programmable curve for step 2
CCrv2	0.0 - 1.0	-	0.1	0.0	Parameter C for customer programmable curve for step 2
DCrv2	0.000 - 60.000	-	0.001	0.000	Parameter D for customer programmable curve for step 2
PCrv2	0.000 - 3.000	-	0.001	1.000	Parameter P for customer programmable curve for step 2
CrvSat2	0 - 100	%	1	0	Tuning param for prog. under voltage Inverse-Time curve, step 2

Table 45: UV2PTUV (27) Non group settings (basic)

Name	Values (Range)	Unit	Step	Default	Description
ConnType	PhN DFT PhPh RMS PhN RMS PhPh DFT	-	-	PhN DFT	Group selector for connection type

3.7.2 Two step overvoltage protection OV2PTOV (59)

Function description	IEC 61850 identification	IEC 60617 identification	ANSI/IEEE C37.2 device number
Two step overvoltage protection	OV2PTOV	3U>	59

3.7.2.1 Application

Two step overvoltage protection OV2PTOV (59) is applicable in all situations, where reliable detection of high voltage is necessary. OV2PTOV (59) is used for supervision and detection of abnormal conditions, which, in combination with other protection functions, increase the security of a complete protection system.

High overvoltage conditions are caused by abnormal situations in the power system. OV2PTOV (59) is applied to power system elements, such as generators, transformers, motors and power lines in order to detect high voltage conditions. OV2PTOV (59) is used in combination with low current signals, to identify a transmission line, open in the remote end. In addition to that, OV2PTOV (59) is also used to initiate voltage correction measures, like insertion of shunt reactors, to compensate for low load, and thereby decreasing the voltage. The function has a high measuring accuracy and hysteresis setting to allow applications to control reactive load.

OV2PTOV (59) is used to disconnect apparatuses, like electric motors, which will be damaged when subject to service under high voltage conditions. It deals with high voltage conditions at power system frequency, which can be caused by:

1. Different kinds of faults, where a too high voltage appears in a certain power system, like metallic connection to a higher voltage level (broken conductor falling down to a crossing overhead line, transformer flash over fault from the high voltage winding to the low voltage winding and so on).
2. Malfunctioning of a voltage regulator or wrong settings under manual control (symmetrical voltage decrease).
3. Low load compared to the reactive power generation (symmetrical voltage decrease).
4. Ground-faults in high impedance grounded systems causes, beside the high voltage in the neutral, high voltages in the two non-faulted phases, (unsymmetrical voltage increase).

OV2PTOV (59) prevents sensitive equipment from running under conditions that could cause their overheating or stress of insulation material, and, thus, shorten their

life time expectancy. In many cases, it is a useful function in circuits for local or remote automation processes in the power system.

3.7.2.2 Setting guidelines

The parameters for Two step overvoltage protection (OV2PTOV ,59) are set via the local HMI or PCM600.

All the voltage conditions in the system where OV2PTOV (59) performs its functions should be considered. The same also applies to the associated equipment, its voltage and time characteristic.

There is a very wide application area where general overvoltage functions are used. All voltage related settings are made as a percentage of a settable base primary voltage, which normally is set to the nominal voltage level (phase-to-phase) of the power system or the high voltage equipment under consideration.

The time delay for the OV2PTOV (59) can sometimes be critical and related to the size of the overvoltage - a power system or a high voltage component can withstand smaller overvoltages for some time, but in case of large overvoltages the related equipment should be disconnected more rapidly.

Some applications and related setting guidelines for the voltage level are given below:

The hysteresis is for overvoltage functions very important to prevent that a transient voltage over set level is not “sealed-in” due to a high hysteresis. Typical values should be ≤ 0.5%.

Equipment protection, such as for motors, generators, reactors and transformers

High voltage will cause overexcitation of the core and deteriorate the winding insulation. The setting has to be well above the highest occurring "normal" voltage and well below the highest acceptable voltage for the equipment.

Equipment protection, capacitors

High voltage will deteriorate the dielectricum and the insulation. The setting has to be well above the highest occurring "normal" voltage and well below the highest acceptable voltage for the capacitor.

Power supply quality

The setting has to be well above the highest occurring "normal" voltage and below the highest acceptable voltage, due to regulation, good practice or other agreements.

High impedance grounded systems

In high impedance grounded systems, ground-faults cause a voltage increase in the non-faulty phases. Two step overvoltage protection (OV2PTOV, 59) is used to detect such

faults. The setting must be above the highest occurring "normal" voltage and below the lowest occurring voltage during faults. A metallic single-phase ground-fault causes the non-faulted phase voltages to increase a factor of √3.

The following settings can be done for the two step overvoltage protection

ConnType: Sets whether the measurement shall be phase-to-ground fundamental value, phase-to-phase fundamental value, phase-to-ground RMS value or phase-to-phase RMS value.

Operation: *Disabled*/*Enabled*.

VBase: Base voltage phase to phase in primary kV. This voltage is used as reference for voltage setting. OV2PTOV (59) measures selectively phase-to-ground voltages, or phase-to-phase voltage chosen by the setting *ConnType*. The function will operate if the voltage gets lower than the set percentage of *VBase*. When *ConnType* is set to *PhN DFT* or *PhN RMS* then the IED automatically divides set value for *VBase* by √3. When *ConnType* is set to *PhPh DFT* or *PhPh RMS* then set value for *VBase* is used. Therefore, always set *VBase* as rated primary phase-to-phase ground voltage of the protected object. If phase to neutral (PhN) measurement is selected as setting, the operation of phase-to-earth over voltage is automatically divided by sqrt3. This means operation for phase-to-ground voltage over:

$$V > (\%) \cdot VBase(kV) / \sqrt{3}$$

(Equation 40)

and operation for phase-to-phase voltage over:

$$\text{Vpickup} > (\%) \cdot \text{VBase(kV)}$$

(Equation 41)

The below described setting parameters are identical for the two steps (n = 1 or 2). Therefore the setting parameters are described only once.

Characteristicn: This parameter gives the type of time delay to be used. The setting can be *Definite time*, *Inverse Curve A*, *Inverse Curve B*, *Inverse Curve C* or *I/Prog. inv. curve*. The choice is highly dependent of the protection application.

OpModen: This parameter describes how many of the three measured voltages that should be above the set level to give operation. The setting can be *1 out of 3*, *2 out of 3*, *3 out of 3*. In most applications it is sufficient that one phase voltage is high to give operation. If the function shall be insensitive for single phase-to-ground faults *1 out of 3* can be chosen, because the voltage will normally rise in the non-faulted phases at single phase-to-ground faults. In subtransmission and transmission networks the UV function is mainly a system supervision function and 3 out of 3 is selected.

Pickupn: Set operate overvoltage operation value for step *n*, given as % of *VBase*. The setting is highly dependent of the protection application. Here it is essential to consider the maximum voltage at non-faulted situations. Normally this voltage is less than 110% of nominal voltage.

tn: time delay of step *n*, given in s. The setting is highly dependent of the protection application. In many applications the protection function is used to prevent damages to the protected object. The speed might be important for example in case of protection of transformer that might be overexcited. The time delay must be co-ordinated with other automated actions in the system.

tResetn: Reset time for step *n* if definite time delay is used, given in s. The default value is 25 ms.

tnMin: Minimum operation time for inverse time characteristic for step *n*, given in s. For very high voltages the overvoltage function, using inverse time characteristic, can give very short operation time. This might lead to unselective trip. By setting *t1Min* longer than the operation time for other protections such unselective tripping can be avoided.

ResetTypeCrvn: This parameter for inverse time characteristic can be set: *Instantaneous*, *Frozen time*, *Linearly decreased*. The default setting is *Instantaneous*.

tIResetn: Reset time for step *n* if inverse time delay is used, given in s. The default value is 25 ms.

TDn: Time multiplier for inverse time characteristic. This parameter is used for co-ordination between different inverse time delayed undervoltage protections.

ACrvn, *BCrvn*, *CCrvn*, *DCrvn*, *PCrvn*: Parameters to set to create programmable under voltage inverse time characteristic. Description of this can be found in the technical reference manual.

CrvSatn: When the denominator in the expression of the programmable curve is equal to zero the time delay will be infinity. There will be an undesired discontinuity. Therefore a tuning parameter *CrvSatn* is set to compensate for this phenomenon. In the voltage interval *Pickup*> up to *Pickup*> · (1.0 + *CrvSatn*/100) the used voltage will be: *Pickup*> · (1.0 + *CrvSatn*/100). If the programmable curve is used, this parameter must be calculated so that:

$$B \cdot \frac{CrvSatn}{100} - C > 0$$

(Equation 42)

HystAbsn: Absolute hysteresis set in % of *VBase*. The setting of this parameter is highly dependent of the application. If the function is used as control for automatic

switching of reactive compensation devices the hysteresis must be set smaller than the voltage change after switching of the compensation device.

3.7.2.3 Setting parameters

Table 46: OV2PTOV (59) Group settings (basic)

Name	Values (Range)	Unit	Step	Default	Description
Operation	Disabled Enabled	-	-	Disabled	Disable/Enable Operation
VBase	0.05 - 2000.00	kV	0.05	400.00	Base voltage
OperationStep1	Disabled Enabled	-	-	Enabled	Enable execution of step 1
Characterist1	Definite time Inverse curve A Inverse curve B Inverse curve C Prog. inv. curve	-	-	Definite time	Selection of time delay curve type for step 1
OpMode1	1 out of 3 2 out of 3 3 out of 3	-	-	1 out of 3	Number of phases required for op (1 of 3, 2 of 3, 3 of 3) from step 1
Pickup1	1 - 200	%VB	1	120	Voltage pickup value (Definite-Time & Inverse-Time curve) in % of VBase, step 1
t1	0.00 - 6000.00	s	0.01	5.00	Definitive time delay of step 1
t1Min	0.000 - 60.000	s	0.001	5.000	Minimum operate time for inverse curves for step 1
TD1	0.05 - 1.10	-	0.01	0.05	Time multiplier for the inverse time delay for step 1
HystAbs1	0.0 - 100.0	%VB	0.1	0.5	Absolute hysteresis in % of VBase, step 1
OperationStep2	Disabled Enabled	-	-	Enabled	Enable execution of step 2
Characterist2	Definite time Inverse curve A Inverse curve B Inverse curve C Prog. inv. curve	-	-	Definite time	Selection of time delay curve type for step 2
OpMode2	1 out of 3 2 out of 3 3 out of 3	-	-	1 out of 3	Number of phases required for op (1 of 3, 2 of 3, 3 of 3) from step 2
Pickup2	1 - 200	%VB	1	150	Voltage pickup value (Definite-Time & Inverse-Time curve) in % of VBase, step 2
t2	0.000 - 60.000	s	0.001	5.000	Definitive time delay of step 2
t2Min	0.000 - 60.000	s	0.001	5.000	Minimum operate time for inverse curves for step 2
TD2	0.05 - 1.10	-	0.01	0.05	Time multiplier for the inverse time delay for step 2
HystAbs2	0.0 - 100.0	%VB	0.1	0.5	Absolute hysteresis in % of VBase, step 2

Table 47: OV2PTOV (59) Group settings (advanced)

Name	Values (Range)	Unit	Step	Default	Description
tReset1	0.000 - 60.000	s	0.001	0.025	Reset time delay used in IEC Definite Time curve step 1
ResetTypeCrv1	Instantaneous Frozen timer Linearly decreased	-	-	Instantaneous	Selection of used IDMT reset curve type for step 1
tIReset1	0.000 - 60.000	s	0.001	0.025	Time delay in Inverse-Time reset (s), step 1
ACrv1	0.005 - 200.000	-	0.001	1.000	Parameter A for customer programmable curve for step 1
BCrv1	0.50 - 100.00	-	0.01	1.00	Parameter B for customer programmable curve for step 1
CCrv1	0.0 - 1.0	-	0.1	0.0	Parameter C for customer programmable curve for step 1
DCrv1	0.000 - 60.000	-	0.001	0.000	Parameter D for customer programmable curve for step 1
PCrv1	0.000 - 3.000	-	0.001	1.000	Parameter P for customer programmable curve for step 1
CrvSat1	0 - 100	%	1	0	Tuning param for programmable over voltage TOV curve, step 1
tReset2	0.000 - 60.000	s	0.001	0.025	Reset time delay used in IEC Definite Time curve step 2
ResetTypeCrv2	Instantaneous Frozen timer Linearly decreased	-	-	Instantaneous	Selection of Time Delay reset curve for step 2
tIReset2	0.000 - 60.000	s	0.001	0.025	Time delay in Inverse-Time reset (s), step 2
ACrv2	0.005 - 200.000	-	0.001	1.000	Parameter A for customer programmable curve for step 2
BCrv2	0.50 - 100.00	-	0.01	1.00	Parameter B for customer programmable curve for step 2
CCrv2	0.0 - 1.0	-	0.1	0.0	Parameter C for customer programmable curve for step 2
DCrv2	0.000 - 60.000	-	0.001	0.000	Parameter D for customer programmable curve for step 2
PCrv2	0.000 - 3.000	-	0.001	1.000	Parameter P for customer programmable curve for step 2
CrvSat2	0 - 100	%	1	0	Tuning param for programmable over voltage TOV curve, step 2

Table 48: OV2PTOV (59) Non group settings (basic)

Name	Values (Range)	Unit	Step	Default	Description
ConnType	PhN DFT PhPh DFT PhN RMS PhPh RMS	-	-	PhN DFT	Group selector for connection type

3.8 Frequency protection

3.8.1 Underfrequency protection SAPTUF (81)

Function description	IEC 61850 identification	IEC 60617 identification	ANSI/IEEE C37.2 device number
Underfrequency protection	SAPTUF	*f* <	81

3.8.1.1 Application

Underfrequency protection SAPTUF (81) is applicable in all situations, where reliable detection of low fundamental power system frequency is needed. The power system frequency, and the rate of change of frequency, is a measure of the unbalance between the actual generation and the load demand. Low fundamental frequency in a power system indicates that the available generation is too low to fully supply the power demanded by the load connected to the power grid. SAPTUF (81) detects such situations and provides an output signal, suitable for load shedding, generator boosting, HVDC-set-point change, gas turbine start up and so on. Sometimes shunt reactors are automatically switched in due to low frequency, in order to reduce the power system voltage and hence also reduce the voltage dependent part of the load.

SAPTUF (81) is very sensitive and accurate and is used to alert operators that frequency has slightly deviated from the set-point, and that manual actions might be enough. The underfrequency signal is also used for overexcitation detection. This is especially important for generator step-up transformers, which might be connected to the generator but disconnected from the grid, during a roll-out sequence. If the generator is still energized, the system will experience overexcitation, due to the low frequency.

3.8.1.2 Setting guidelines

All the frequency and voltage magnitude conditions in the system where SAPTUF (81) performs its functions should be considered. The same also applies to the associated equipment, its frequency and time characteristic.

There are especially two specific application areas for SAPTUF (81):

1. to protect equipment against damage due to low frequency, such as generators, transformers, and motors. Overexcitation is also related to low frequency
2. to protect a power system, or a part of a power system, against breakdown, by shedding load, in generation deficit situations.

The underfrequency PICKUP value is set in Hz. All voltage magnitude related settings are made as a percentage of a settable base voltage, which normally is set to the nominal primary voltage level (phase-phase) of the power system or the high voltage equipment under consideration.

Some applications and related setting guidelines for the frequency level are given below:

Equipment protection, such as for motors and generators

The setting has to be well below the lowest occurring "normal" frequency and well above the lowest acceptable frequency for the equipment.

Power system protection, by load shedding

The setting has to be below the lowest occurring "normal" frequency and well above the lowest acceptable frequency for power stations, or sensitive loads. The setting level, the number of levels and the distance between two levels (in time and/or in frequency) depends very much on the characteristics of the power system under consideration. The size of the "largest loss of production" compared to "the size of the power system" is a critical parameter. In large systems, the load shedding can be set at a fairly high frequency level, and the time delay is normally not critical. In smaller systems the frequency PICKUP level has to be set at a lower value, and the time delay must be rather short.

The voltage related time delay is used for load shedding. The settings of SAPTUF (81) could be the same all over the power system. The load shedding is then performed firstly in areas with low voltage magnitude, which normally are the most problematic areas, where the load shedding also is most efficient.

Equipment protection, such as for motors and generators
The setting has to be well below the lowest occurring "normal" frequency and well above the lowest acceptable frequency for the equipment.

Power system protection, by load shedding
The setting has to be well below the lowest occurring "normal" frequency and well above the lowest acceptable frequency for power stations, or sensitive loads. The setting level, the number of levels and the distance between two levels (in time and/or in frequency) depends very much on the characteristics of the power system under consideration. The size of the "largest loss of production" compared to "the size of the power system" is a critical parameter. In large systems, the load shedding can be set at a fairly high frequency level, and the time delay is normally not critical. In smaller

systems the frequency pickup level has to be set at a lower value, and the time delay must be rather short.

The voltage related time delay is used for load shedding. The settings of the underfrequency function could be the same all over the power system. The load shedding is then performed firstly in areas with low voltage magnitude, which normally are the most problematic areas, where the load shedding also is most efficient.

3.8.1.3 Setting parameters

Table 49: SAPTUF (81) Group settings (basic)

Name	Values (Range)	Unit	Step	Default	Description
Operation	Disabled Enabled	-	-	Disabled	Disable/Enable Operation
Vbase	0.05 - 2000.00	kV	0.05	400.00	Base voltage
PUFrequency	35.00 - 75.00	Hz	0.01	48.80	Frequency setting pickup value.
IntBlockLevel	0 - 100	%VB	1	50	Internal blocking level in % of VBase.
TimeDlyOperate	0.000 - 60.000	s	0.001	0.200	Operate time delay in over/under-frequency mode.
TimeDlyReset	0.000 - 60.000	s	0.001	0.000	Time delay for reset.
TimeDlyRestore	0.000 - 60.000	s	0.001	0.000	Restore time delay.
RestoreFreq	45.00 - 65.00	Hz	0.01	50.10	Restore frequency if frequency is above frequency value.
TimerOperation	Definite timer Volt based timer	-	-	Definite timer	Setting for choosing timer mode.
VNom	50 - 150	%VB	1	100	Nominal voltage in % of VBase for voltage based timer.
VMin	50 - 150	%VB	1	90	Lower operation limit in % of VBase for voltage based timer.
Exponent	0.0 - 5.0	-	0.1	1.0	For calculation of the curve form for voltage based timer.
t_MaxTripDelay	0.010 - 60.000	s	0.001	1.000	Maximum time operation limit for voltage based timer.
t_MinTripDelay	0.010 - 60.000	s	0.001	1.000	Minimum time operation limit for voltage based timer.

3.8.2 Overfrequency protection SAPTOF (81)

Function description	IEC 61850 identification	IEC 60617 identification	ANSI/IEEE C37.2 device number
Overfrequency protection	SAPTOF	*f* >	81

3.8.2.1 Application

Overfrequency protection function SAPTOF (81) is applicable in all situations, where reliable detection of high fundamental power system frequency is needed. The power system frequency, and rate of change of frequency, is a measure of the unbalance between the actual generation and the load demand. High fundamental frequency in a power system indicates that the available generation is too large compared to the power demanded by the load connected to the power grid. SAPTOF (81) detects such situations and provides an output signal, suitable for generator shedding, HVDC-set-point change and so on. SAPTOF (81) is very sensitive and accurate and can also be used to alert operators that frequency has slightly deviated from the set-point, and that manual actions might be enough.

3.8.2.2 Setting guidelines

All the frequency and voltage magnitude conditions in the system where SAPTOF (81) performs its functions must be considered. The same also applies to the associated equipment, its frequency and time characteristic.

There are especially two application areas for SAPTOF (81):

1. to protect equipment against damage due to high frequency, such as generators, and motors
2. to protect a power system, or a part of a power system, against breakdown, by shedding generation, in over production situations.

The overfrequency PICKUP value is set in Hz. All voltage magnitude related settings are made as a percentage of a settable base voltage, which normally is set to the nominal voltage level (phase-to-phase) of the power system or the high voltage equipment under consideration.

Some applications and related setting guidelines for the frequency level are given below:

Equipment protection, such as for motors and generators

The setting has to be well above the highest occurring "normal" frequency and well below the highest acceptable frequency for the equipment.

Power system protection, by generator shedding

The setting must be above the highest occurring "normal" frequency and below the highest acceptable frequency for power stations, or sensitive loads. The setting level, the number of levels and the distance between two levels (in time and/or in frequency) depend very much on the characteristics of the power system under consideration. The size of the "largest loss of load" compared to "the size of the power system" is a critical parameter. In large systems, the generator shedding can be set at a fairly low frequency level, and the time delay is normally not critical. In smaller systems the frequency PICKUP level has to be set at a higher value, and the time delay must be rather short.

Equipment protection, such as for motors and generators

The setting has to be well above the highest occurring "normal" frequency and well below the highest acceptable frequency for the equipment.

Power system protection, by generator shedding

The setting level, the number of levels and the distance between two levels (in time and/or in frequency) depend very much on the characteristics of the power system under consideration. The size of the "largest loss of load" compared to "the size of the power system" is a critical parameter. In large systems, the generator shedding can be set at a fairly low frequency level, and the time delay is normally not critical. In smaller systems the frequency pickup level has to be set at a higher value, and the time delay must be rather short.

3.8.2.3 Setting parameters

Table 50: SAPTOF (81) Group settings (basic)

Name	Values (Range)	Unit	Step	Default	Description
Operation	Disabled Enabled	-	-	Disabled	Disable/Enable Operation
VBase	0.05 - 2000.00	kV	0.05	400.00	Base voltage
PUFrequency	35.00 - 75.00	Hz	0.01	51.20	Frequency setting pickup value.
IntBlockLevel	0 - 100	%VB	1	50	Internal blocking level in % of VBase.
TimeDlyOperate	0.000 - 60.000	s	0.001	0.000	Operate time delay in over/under-frequency mode.
TimeDlyReset	0.000 - 60.000	s	0.001	0.000	Time delay for reset.

3.8.3 Rate-of-change frequency protection SAPFRC (81)

Function description	IEC 61850 identification	IEC 60617 identification	ANSI/IEEE C37.2 device number
Rate-of-change frequency protection	SAPFRC	*df/dt* ≷	81

3.8.3.1 Application

Rate-of-change frequency protection (SAPFRC, 81), is applicable in all situations, where reliable detection of change of the fundamental power system voltage frequency is needed. SAPFRC (81) can be used both for increasing frequency and for decreasing frequency. SAPFRC (81) provides an output signal, suitable for load shedding or generator shedding, generator boosting, HVDC-set-point change, gas turbine start up and so on. Very often SAPFRC (81) is used in combination with a low frequency signal, especially in smaller power systems, where loss of a fairly large generator will require quick remedial actions to secure the power system integrity. In such situations load shedding actions are required at a rather high frequency level, but in combination with a large negative rate-of-change of frequency the underfrequency protection can be used at a rather high setting.

3.8.3.2 Setting guidelines

The parameters for Rate-of-change frequency protection SAPFRC (81) are set via the local HMI or PCM600.

All the frequency and voltage magnitude conditions in the system where SAPFRC (81) performs its functions should be considered. The same also applies to the associated equipment, its frequency and time characteristic.

There are especially two application areas for SAPFRC (81):

1. to protect equipment against damage due to high or too low frequency, such as generators, transformers, and motors
2. to protect a power system, or a part of a power system, against breakdown by shedding load or generation, in situations where load and generation are not in balance.

SAPFRC (81) is normally used together with an overfrequency or underfrequency function, in small power systems, where a single event can cause a large imbalance between load and generation. In such situations load or generation shedding has to take place very quickly, and there might not be enough time to wait until the frequency signal has reached an abnormal value. Actions are therefore taken at a frequency level

closer to the primary nominal level, if the rate-of-change frequency is large (with respect to sign).

SAPFRC (81)PICKUP value is set in Hz/s. All voltage magnitude related settings are made as a percentage of a settable base voltage, which normally is set to the primary nominal voltage level (phase-phase) of the power system or the high voltage equipment under consideration.

SAPFRC (81) is not instantaneous, since the function needs some time to supply a stable value. It is recommended to have a time delay long enough to take care of signal noise. However, the time, rate-of-change frequency and frequency steps between different actions might be critical, and sometimes a rather short operation time is required, for example, down to 70 ms.

Smaller industrial systems might experience rate-of-change frequency as large as 5 Hz/s, due to a single event. Even large power systems may form small islands with a large imbalance between load and generation, when severe faults (or combinations of faults) are cleared - up to 3 Hz/s has been experienced when a small island was isolated from a large system. For more "normal" severe disturbances in large power systems, rate-of-change of frequency is much less, most often just a fraction of 1.0 Hz/s.

3.8.3.3 Setting parameters

Table 51: SAPFRC (81) Group settings (basic)

Name	Values (Range)	Unit	Step	Default	Description
Operation	Disabled Enabled	-	-	Disabled	Disable/Enable Operation
VBase	0.05 - 2000.00	kV	0.05	400.00	Base setting for the phase-phase voltage in kV
PUFreqGrad	-10.00 - 10.00	Hz/s	0.01	0.50	Frequency gradient start value. Sign defines direction.
IntBlockLevel	0 - 100	%VB	1	50	Internal blocking level in % of VBase.
tTrip	0.000 - 60.000	s	0.001	0.200	Operate time delay in pos./neg. frequency gradient mode.
RestoreFreq	45.00 - 65.00	Hz	0.01	49.90	Restore frequency if frequency is above frequency value (Hz)
tRestore	0.000 - 60.000	s	0.001	0.000	Restore time delay.
tReset	0.000 - 60.000	s	0.001	0.000	Time delay for reset.

3.9 Multipurpose protection

3.9.1 General current and voltage protection CVGAPC

Function description	IEC 61850 identification	IEC 60617 identification	ANSI/IEEE C37.2 device number
General current and voltage protection	CVGAPC	-	-

3.9.1.1 Application

A breakdown of the insulation between phase conductors or a phase conductor and ground results in a short circuit or a ground fault. Such faults can result in large fault currents and may cause severe damage to the power system primary equipment. Depending on the magnitude and type of the fault different overcurrent protections, based on measurement of phase, ground or sequence current components can be used to clear these faults. Additionally it is sometimes required that these overcurrent protections shall be directional and/or voltage controlled/restrained.

The over/under voltage protection is applied on power system elements, such as generators, transformers, motors and power lines in order to detect abnormal voltage conditions. Depending on the type of voltage deviation and type of power system abnormal condition different over/under voltage protections based on measurement of phase-to-ground, phase-to-phase, residual- or sequence- voltage components can be used to detect and operate for such incident.

The IED can be provided with multiple General current and voltage protection (CVGAPC) protection modules. The function is always connected to three-phase current and three-phase voltage input in the configuration tool, but it will always measure only one current and one voltage quantity selected by the end user in the setting tool.

Each CVGAPC function module has got four independent protection elements built into it.

1. Two overcurrent steps with the following built-in features:
    - Definite time delay or Inverse Time Overcurrent TOC/IDMT delay for both steps
    - Second harmonic supervision is available in order to only allow operation of the overcurrent stage(s) if the content of the second harmonic in the measured current is lower than pre-set level
    - Directional supervision is available in order to only allow operation of the overcurrent stage(s) if the fault location is in the pre-set direction (*Forward*

or *Reverse*). Its behavior during low-level polarizing voltage is settable (*Non-Directional*,*Block*,*Memory*)
    - Voltage restrained/controlled feature is available in order to modify the pick-up level of the overcurrent stage(s) in proportion to the magnitude of the measured voltage
    - Current restrained feature is available in order to only allow operation of the overcurrent stage(s) if the measured current quantity is bigger than the set percentage of the current restrain quantity.
2. Two undercurrent steps with the following built-in features:
    - Definite time delay for both steps
3. Two overvoltage steps with the following built-in features
    - Definite time delay or Inverse Time Overcurrent TOC/IDMT delay for both steps
4. Two undervoltage steps with the following built-in features
    - Definite time delay or Inverse Time Overcurrent TOC/IDMT delay for both steps

All these four protection elements within one general protection function works independently from each other and they can be individually enabled or disabled. However it shall be once more noted that all these four protection elements measure one selected current quantity and one selected voltage quantity (see table 52 and table 53). It is possible to simultaneously use all four-protection elements and their individual stages. Sometimes in order to obtain desired application functionality it is necessary to provide interaction between two or more protection elements/stages within one CVGAPC function by appropriate IED configuration (for example, dead machine protection for generators).

Current and voltage selection for CVGAPC function

CVGAPC function is always connected to three-phase current and three-phase voltage input in the configuration tool, but it will always measure only the single current and the single voltage quantity selected by the end user in the setting tool (selected current quantity and selected voltage quantity).

The user can select, by a setting parameter *CurrentInput*, to measure one of the following current quantities shown in table 52.

Table 52: Available selection for current quantity within CVGAPC function

	Set value for parameter "CurrentInput"	Comment
1	*PhaseA*	CVGAPC function will measure the phase A current phasor
2	*PhaseB*	CVGAPC function will measure the phase B current phasor
3	*PhaseC*	CVGAPC function will measure the phase C current phasor
Table continues on next page		

	Set value for parameter "CurrentInput"	Comment
4	*PosSeq*	CVGAPC function will measure internally calculated positive sequence current phasor
5	*NegSeq*	CVGAPC function will measure internally calculated negative sequence current phasor
6	*3 · ZeroSeq*	CVGAPC function will measure internally calculated zero sequence current phasor multiplied by factor 3
7	*MaxPh*	CVGAPC function will measure current phasor of the phase with maximum magnitude
8	*MinPh*	CVGAPC function will measure current phasor of the phase with minimum magnitude
9	*UnbalancePh*	CVGAPC function will measure magnitude of unbalance current, which is internally calculated as the algebraic magnitude difference between the current phasor of the phase with maximum magnitude and current phasor of the phase with minimum magnitude. Phase angle will be set to 0° all the time
10	*PhaseA-PhaseB*	CVGAPC function will measure the current phasor internally calculated as the vector difference between the phase A current phasor and phase B current phasor (VA-VB)
11	*PhaseB-PhaseC*	CVGAPC function will measure the current phasor internally calculated as the vector difference between the phase B current phasor and phase C current phasor (VB-VC)
12	*PhaseC-PhaseA*	CVGAPC function will measure the current phasor internally calculated as the vector difference between the phase C current phasor and phase A current phasor (VC-VA)
13	*MaxPh-Ph*	CVGAPC function will measure ph-ph current phasor with the maximum magnitude
14	*MinPh-Ph*	CVGAPC function will measure ph-ph current phasor with the minimum magnitude
15	*UnbalancePh-Ph*	CVGAPC function will measure magnitude of unbalance current, which is internally calculated as the algebraic magnitude difference between the ph-ph current phasor with maximum magnitude and ph-ph current phasor with minimum magnitude. Phase angle will be set to 0° all the time

The user can select, by a setting parameter *VoltageInput*, to measure one of the following voltage quantities shown in table 53.

Table 53: Available selection for voltage quantity within CVGAPC function

	Set value for parameter "VoltageInput"	Comment
1	*PhaseA*	CVGAPC function will measure the phase A voltage phasor
2	*PhaseB*	CVGAPC function will measure the phase B voltage phasor
3	*PhaseC*	CVGAPC function will measure the phase C voltage phasor
4	*PosSeq*	CVGAPC function will measure internally calculated positive sequence voltage phasor
Table continues on next page		

	Set value for parameter "VoltageInput"	Comment
5	*-NegSeq*	CVGAPC function will measure internally calculated negative sequence voltage phasor. This voltage phasor will be intentionally rotated for 180° in order to enable easier settings for the directional feature when used.
6	*-3*ZeroSeq*	CVGAPC function will measure internally calculated zero sequence voltage phasor multiplied by factor 3. This voltage phasor will be intentionally rotated for 180° in order to enable easier settings for the directional feature when used.
7	*MaxPh*	CVGAPC function will measure voltage phasor of the phase with maximum magnitude
8	*MinPh*	CVGAPC function will measure voltage phasor of the phase with minimum magnitude
9	*UnbalancePh*	CVGAPC function will measure magnitude of unbalance voltage, which is internally calculated as the algebraic magnitude difference between the voltage phasor of the phase with maximum magnitude and voltage phasor of the phase with minimum magnitude. Phase angle will be set to 0° all the time
10	*PhaseA-PhaseB*	CVGAPC function will measure the voltage phasor internally calculated as the vector difference between the phase A voltage phasor and phase B voltage phasor (VA-VB)
11	*PhaseB-PhaseC*	CVGAPC function will measure the voltage phasor internally calculated as the vector difference between the phase B voltage phasor and phase C voltage phasor (VB-VC)
12	*PhaseC-PhaseC*	CVGAPC function will measure the voltage phasor internally calculated as the vector difference between the phase C voltage phasor and phase A voltage phasor (VC-VA)
13	*MaxPh-Ph*	CVGAPC function will measure ph-ph voltage phasor with the maximum magnitude
14	*MinPh-Ph*	CVGAPC function will measure ph-ph voltage phasor with the minimum magnitude
15	*UnbalancePh-Ph*	CVGAPC function will measure magnitude of unbalance voltage, which is internally calculated as the algebraic magnitude difference between the ph-ph voltage phasor with maximum magnitude and ph-ph voltage phasor with minimum magnitude. Phase angle will be set to 0° all the time

It is important to notice that the voltage selection from table 53 is always applicable regardless the actual external VT connections. The three-phase VT inputs can be connected to IED as either three phase-to-groundvoltages VA, VB and VC or three phase-to-phase voltages VAB, VBC and VCA. This information about actual VT connection is entered as a setting parameter for the pre-processing block, which will then take automatically care about it.

Base quantities for CVGAPC function

The parameter settings for the base quantities, which represent the base (100%) for pickup levels of all measuring stages shall be entered as setting parameters for every CVGAPC function.

Base current shall be entered as:

1. rated phase current of the protected object in primary amperes, when the measured Current Quantity is selected from 1 to 9, as shown in table 52.
2. rated phase current of the protected object in primary amperes multiplied by √3 (1.732 x Iphase), when the measured Current Quantity is selected from 10 to 15, as shown in table 52.

Base voltage shall be entered as:

1. rated phase-to-ground voltage of the protected object in primary kV, when the measured Voltage Quantity is selected from 1 to 9, as shown in table 53.
2. rated phase-to-phase voltage of the protected object in primary kV, when the measured Voltage Quantity is selected from 10 to 15, as shown in table 53.

Application possibilities

Due to its flexibility the general current and voltage protection (CVGAPC) function can be used, with appropriate settings and configuration in many different applications. Some of possible examples are given below:

1. Transformer and line applications:
   - Underimpedance protection (circular, non-directional characteristic) (21)
   - Underimpedance protection (circular mho characteristic) (21)
   - Voltage Controlled/Restrained Overcurrent protection (51C, 51V)
   - Phase or Negative/Positive/Zero Sequence (Non-Directional or Directional) Overcurrent protection (50, 51, 46, 67, 67N, 67Q)
   - Phase or phase-to-phase or Negative/Positive/Zero Sequence over/under voltage protection (27, 59, 47)
   - Special thermal overload protection (49)
   - Open Phase protection
   - Unbalance protection
2. Generator protection
   - 80-95% Stator earth fault protection (measured or calculated 3Vo) (59GN)
   - Rotor earth fault protection (with external COMBIFLEX RXTTE4 injection unit) (64F)
   - Underimpedance protection (21)
   - Voltage Controlled/Restrained Overcurrent protection (51C, 51V)

- Turn-to-Turn & Differential Backup protection (directional Negative Sequence. Overcurrent protection connected to generator HV terminal CTs looking into generator) (67Q)
- Stator Overload protection (49S)
- Rotor Overload protection (49R)
- Loss of Excitation protection (directional pos. seq. OC protection) (40)
- Reverse power/Low forward power protection (directional pos. seq. OC protection, 2% sensitivity) (32)
- Dead-Machine/Inadvertent-Energizing protection (51/27)
- Breaker head flashover protection
- Improper synchronizing detection
- Sensitive negative sequence generator over current protection and alarm (46)
- Phase or phase-to-phase or Negative/Positive/Zero Sequence over/under voltage protection (27x, 59x, 47)
- Generator out-of-step detection (based on directional pos. seq. OC) (78)
- Inadvertent generator energizing

Inadvertent generator energization

When the generator is taken out of service, and stand-still, there is a risk that the generator circuit breaker is closed by mistake.

Three-phase energizing of a generator, which is at standstill or on turning gear, causes it to behave and accelerate similarly to an induction motor. The machine, at this point, essentially represents the subtransient reactance to the system and it can be expected to draw from one to four per unit current, depending on the equivalent system impedance. Machine terminal voltage can range from 20% to 70% of rated voltage, again, depending on the system equivalent impedance (including the block transformer). Higher quantities of machine current and voltage (3 to 4 per unit current and 50% to 70% rated voltage) can be expected if the generator is connected to a strong system. Lower current and voltage values (1 to 2 per unit current and 20% to 40% rated voltage) are representative of weaker systems.

Since a generator behaves similarly to an induction motor, high currents will develop in the rotor during the period it is accelerating. Although the rotor may be thermally damaged from excessive high currents, the time to damage will be on the order of a few seconds. Of more critical concern, however, is the bearing, which can be damaged in a fraction of a second due to low oil pressure. Therefore, it is essential that high speed tripping is provided. This tripping should be almost instantaneous (< 100 ms).

There is a risk that the current into the generator at inadvertent energization will be limited so that the “normal” overcurrent or underimpedance protection will not detect the dangerous situation. The delay of these protection functions might be too long. The reverse power protection might detect the situation but the operation time of this protection is normally too long.

For big and important machines, fast protection against inadvertent energizing should, therefore, be included in the protective scheme.

The protection against inadvertent energization can be made by a combination of undervoltage, overvoltage and overcurrent protection functions. The undervoltage function will, with a delay for example 10 s, detect the situation when the generator is not connected to the grid (standstill) and activate the overcurrent function. The overvoltage function will detect the situation when the generator is taken into operation and will disable the overcurrent function. The overcurrent function will have a pick-up value about 50% of the rated current of the generator. The trip delay will be about 50 ms.

3.9.1.2 Setting guidelines

When inverse time overcurrent characteristic is selected, the operate time of the stage will be the sum of the inverse time delay and the set definite time delay. Thus, if only the inverse time delay is required, it is of utmost importance to set the definite time delay for that stage to zero.

The parameters for the general current and voltage protection function (CVGAPC) are set via the local HMI or Protection and Control Manager (PCM600).

The overcurrent steps has a *IMinx* (*x*=1 or 2 depending on step) setting to set the minimumpickup current. Set *IMinx* below *PickupCurr_OCx* for every step to achieve ANSI reset characteristic according to standard. If *IMinx* is set above *PickupCurr_OCx* for any step the ANSI reset works as if current is zero when current drops below *IMinx*.

Directional negative sequence overcurrent protection

Directional negative sequence overcurrent protection is typically used as sensitive ground-fault protection of power lines were incorrect zero sequence polarization may result from mutual induction between two or more parallel lines. Additionally, it can be used in applications on underground cables where zero-sequence impedance depends on the fault current return paths, but the cable negative-sequence impedance is practically constant. It shall be noted that directional negative sequence OC element offers protection against all unbalance faults (phase-to-phase faults as well). Care shall be taken that the minimum pickup of such protection function shall be set above natural system unbalance level.

An example will be given, how sensitive-ground-fault protection for power lines can be achieved by using negative-sequence directional overcurrent protection elements within a CVGAPC function.

This functionality can be achieved by using one CVGAPC function. The following shall be done to ensure proper operation of the function:

1. Connect three-phase power line currents and three-phase power line voltages to one CVGAPC instance (for example, GF04)
2. Set *CurrentInput* to *NegSeq* (please note that CVGAPC function measures I2 current and NOT 3I2 current; this is essential for proper OC pickup level setting)
3. Set *VoltageInput* to *-NegSeq* (please note that the negative sequence voltage phasor is intentionally inverted in order to simplify directionality
4. Set base current *IBase* value equal to the rated primary current of power line CTs
5. Set base voltage *UBase* value equal to the rated power line phase-to-phase voltage in kV
6. Set *RCADir* to value +65 degrees (*NegSeq* current typically lags the inverted *NegSeq* voltage for this angle during the fault)
7. Set *ROADir* to value 90 degree
8. Set *LowVolt_VM* to value 2% (*NegSeq* voltage level above which the directional element will be enabled)
9. Enable one overcurrent stage (for example, OC1)
10. By parameter *CurveType_OC1* select appropriate TOC/IDMT or definite time delayed curve in accordance with your network protection philosophy
11. Set *PickupCurr_OC1* to value between 3-10% (typical values)
12. Set *tDef_OC1* or parameter “TD” when TOC/IDMT curves are used to insure proper time coordination with other ground-fault protections installed in the vicinity of this power line
13. Set *DirMode_OC1* to *Forward*
14. Set *DirPrinc_OC1* to *IcosPhi&U*
15. Set *ActLowVolt1_VM* to *Block*
    - In order to insure proper restraining of this element for CT saturations during three-phase faults it is possible to use current restraint feature and enable this element to operate only when *NegSeq* current is bigger than a certain percentage (10% is typical value) of measured *PosSeq* current in the power line. To do this the following settings within the same function shall be done:
16. Set *EnRestrainCurr* to *On*
17. Set *RestrCurrInput* to *PosSeq*
18. Set *RestrCurrCoeff* to value 0.1

If required, this CVGAPC function can be used in directional comparison protection scheme for the power line protection if communication channels to the remote end of this power line are available. In that case typically two *NegSeq* overcurrent steps are required. One for forward and one for reverse direction. As explained before the OC1 stage can be used to detect faults in forward direction. The built-in OC2 stage can be used to detect faults in reverse direction.

However the following shall be noted for such application:

- the set values for *RCADir* and *ROADir* settings will be as well applicable for OC2 stage
- setting *DirMode_OC2* shall be set to *Reverse*
- setting parameter *PickupCurr_OC2* shall be made more sensitive than pickup value of forward OC1 element (that is, typically 60% of OC1 set pickup level) in order to insure proper operation of the directional comparison scheme during current reversal situations
- pickup signals from OC1 and OC2 elements shall be used to send forward and reverse signals to the remote end of the power line
- the available scheme communications function block within IED shall be used between multipurpose protection function and the communication equipment in order to insure proper conditioning of the above two pickup signals

Furthermore the other built-in UC, OV and UV protection elements can be used for other protection and alarming purposes.

Negative sequence overcurrent protection

Example will be given how to use one CVGAPC function to provide negative sequence inverse time overcurrent protection for a generator with capability constant of 20s, and maximum continuous negative sequence rating of 7% of the generator rated current.

The capability curve for a generator negative sequence overcurrent protection, often used world-wide, is defined by the ANSI standard in accordance with the following formula:

$$t_{op} = \frac{TD}{\left(\frac{I_{NS}}{I_r}\right)^2}$$

(Equation 43)

where:

t_{op} is the operating time in seconds of the negative sequence overcurrent IED

TD is the generator capability constant in seconds

I_{NS} is the measured negative sequence current

I_r is the generator rated current

By defining parameter x equal to maximum continuous negative sequence rating of the generator in accordance with the following formula

$$x = 7\% = 0.07\,pu$$

(Equation 44)

Equation 43 can be re-written in the following way without changing the value for the operate time of the negative sequence inverse overcurrent IED:

$$t_{op} = \frac{TD \cdot \frac{1}{x^2}}{\left(\frac{I_{NS}}{x \cdot I_r}\right)^2}$$

(Equation 45)

In order to achieve such protection functionality with one CVGAPC functions the following must be done:

1. Connect three-phase generator currents to one CVGAPC instance (for example, GF01)
2. Set parameter *CurrentInput* to value *NegSeq*
3. Set base current value to the rated generator current in primary amperes
4. Enable one overcurrent step (for example, OC1)
5. Select parameter *CurveType_OC1* to value *Programmable*

$$t_{op} = TD \cdot \left(\frac{A}{M^P - C} + B\right)$$

(Equation 46)

where:

t*op*	is the operating time in seconds of the Inverse Time Overcurrent TOC/IDMT algorithm
TD	is time multiplier (parameter setting)
M	is ratio between measured current magnitude and set pickup current level
A, B, C and P	are user settable coefficients which determine the curve used for Inverse Time Overcurrent TOC/IDMT calculation

When the equation 43 is compared with the equation 45 for the inverse time characteristic of the OC1 it is obvious that if the following rules are followed:

1. set TD equal to the generator negative sequence capability value
2. set *A_OC1* equal to the value 1/x2
3. set *B_OC1* = 0.0, *C_OC1*=0.0 and *P_OC1*=2.0
4. set *PickupCurr_OC1* equal to the value x

then the OC1 step of the CVGAPC function can be used for generator negative sequence inverse overcurrent protection.

For this particular example the following settings shall be entered to insure proper function operation:

1. select negative sequence current as measuring quantity for this CVGAPC function
2. make sure that the base current value for the CVGAPC function is equal to the generator rated current
3. set *TD_OC1* = 20
4. set *A_OC1*= $1/0.07^2 = 204.0816$
5. set *B_OC1* = 0.0, C_OC1 = 0.0 and *P_OC1* = 2.0
6. set *PickupCurr_OC1* = 7%

Proper timing of the CVGAPC function made in this way can easily be verified by secondary injection. All other settings can be left at the default values. If required delayed time reset for OC1 step can be set in order to ensure proper function operation in case of repetitive unbalance conditions.

Furthermore the other built-in protection elements can be used for other protection and alarming purposes (for example, use OC2 for negative sequence overcurrent alarm and OV1 for negative sequence overvoltage alarm).

Generator stator overload protection in accordance with IEC or ANSI standards

Example will be given how to use one CVGAPC function to provide generator stator overload protection in accordance with IEC or ANSI standard if minimum-operating current shall be set to 116% of generator rating.

The generator stator overload protection is defined by IEC or ANSI standard for turbo generators in accordance with the following formula:

$$t_{op} = \frac{TD}{\left(\frac{I_m}{I_r}\right)^2 - 1}$$

(Equation 47)

where:

t_{op} is the operating time of the generator stator overload IED

TD is the generator capability constant in accordance with the relevant standard (TD = 37.5 for the IEC standard or TD = 41.4 for the ANSI standard)

I_m is the magnitude of the measured current

I_r is the generator rated current

This formula is applicable only when measured current (for example, positive sequence current) exceeds a pre-set value (typically in the range from 105 to 125% of the generator rated current).

By defining parameter x equal to the per unit value for the desired pickup for the overload IED in accordance with the following formula:

$$x = 116\% = 1.16\,pu$$

(Equation 48)

formula 3.5can be re-written in the following way without changing the value for the operate time of the generator stator overload IED:

$$t_{op} = \frac{TD \cdot \frac{1}{x^2}}{\left(\frac{I_m}{x \cdot I_r}\right)^2 - \frac{1}{x^2}}$$

(Equation 49)

In order to achieve such protection functionality with one CVGAPC functions the following must be done:

1. Connect three-phase generator currents to one CVGAPC instance (for example, GF01)
2. Set parameter *CurrentInput* to value *PosSeq*
3. Set base current value to the rated generator current in primary amperes
4. Enable one overcurrent step (for example OC1)
5. Select parameter *CurveType_OC1* to value *Programmable*

$$t_{op} = TD \cdot \left(\frac{A}{M^P - C} + B\right)$$

(Equation 50)

where:

t_{op}	is the operating time in seconds of the Inverse Time Overcurrent TOC/IDMT algorithm
TD	is time multiplier (parameter setting)
M	is ratio between measured current magnitude and set pickup current level
A, B, C and P	are user settable coefficients which determine the curve used for Inverse Time Overcurrent TOC/IDMT calculation

When the equation 49 is compared with the equation 50 for the inverse time characteristic of the OC1 step in it is obvious that if the following rules are followed:

1. set TD equal to the IEC or ANSI standard generator capability value
2. set parameter *A_OC1* equal to the value 1/x2
3. set parameter *C_OC1* equal to the value 1/x2
4. set parameters *B_OC1* = 0.0 and *P_OC1*=2.0
5. set *PickupCurr_OC1* equal to the value x

then the OC1 step of the CVGAPC function can be used for generator negative sequence inverse overcurrent protection.

1. select positive sequence current as measuring quantity for this CVGAPC function
2. make sure that the base current value for CVGAPC function is equal to the generator rated current
3. set TD = 37.5 for the IEC standard or TD = 41.4 for the ANSI standard
4. set *A_OC1*= 1/1.162 = 0.7432
5. set *C_OC1*= 1/1.162 = 0.7432
6. set *B_OC1* = 0.0 and *P_OC1* = 2.0
7. set *PickupCurr_OC1* = 116%

Proper timing of CVGAPC function made in this way can easily be verified by secondary injection. All other settings can be left at the default values. If required delayed time reset for OC1 step can be set in order to insure proper function operation in case of repetitive overload conditions.

Furthermore the other built-in protection elements can be used for other protection and alarming purposes.

In the similar way rotor overload protection in accordance with ANSI standard can be achieved.

Open phase protection for transformer, lines or generators and circuit breaker head flashover protection for generators

Example will be given how to use one CVGAPC function to provide open phase protection. This can be achieved by using one CVGAPC function by comparing the unbalance current with a pre-set level. In order to make such a function more secure it is possible to restrain it by requiring that at the same time the measured unbalance current must be bigger than 97% of the maximum phase current. By doing this it will be insured that function can only pickup if one of the phases is open circuited. Such an arrangement is easy to obtain in CVGAPC function by enabling the current restraint feature. The following shall be done in order to insure proper operation of the function:

1. Connect three-phase currents from the protected object to one CVGAPC instance (for example, GF03)
2. Set *CurrentInput* to value *UnbalancePh*
3. Set *EnRestrainCurr* to *On*
4. Set *RestrCurrInput* to *MaxPh*
5. Set *RestrCurrCoeff* to value 0.97
6. Set base current value to the rated current of the protected object in primary amperes
7. Enable one overcurrent step (for example, OC1)
8. Select parameter *CurveType_OC1* to value *IEC Def. Time*
9. Set parameter *PickupCurr_OC1* to value 5%
10. Set parameter *tDef_OC1* to desired time delay (for example, 2.0s)

Proper operation of CVGAPC function made in this way can easily be verified by secondary injection. All other settings can be left at the default values. However it shall be noted that set values for restrain current and its coefficient will as well be applicable for OC2 step as soon as it is enabled.

Furthermore the other built-in protection elements can be used for other protection and alarming purposes. For example, in case of generator application by enabling OC2 step with set pickup to 200% and time delay to 0.1s simple but effective protection against circuit breaker head flashover protection is achieved.

Voltage restrained overcurrent protection for generator and step-up transformer

Example will be given how to use one CVGAPC function to provide voltage restrained overcurrent protection for a generator. Let us assume that the time coordination study gives the following required settings:

- Inverse Time Over Current TOC/IDMT curve: ANSI very inverse
- Pickup current of 185% of generator rated current at rated generator voltage
- Pickup current 25% of the original pickup current value for generator voltages below 25% of rated voltage

This functionality can be achieved by using one CVGAPC function. The following shall be done in order to insure proper operation of the function:

1. Connect three-phase generator currents and voltages to one CVGAPC instance (for example, GF05)
2. Set *CurrentInput* to value *MaxPh*
3. Set *VoltageInput* to value *MinPh-Ph* (it is assumed that minimum phase-to-phase voltage shall be used for restraining. Alternatively, positive sequence voltage can be used for restraining by selecting *PosSeq* for this setting parameter)
4. Set base current value to the rated generator current primary amperes
5. Set base voltage value to the rated generator phase-to-phase voltage in kV
6. Enable one overcurrent step (for example, OC1)

7. Select *CurveType_OC1* to value *ANSI Very inv*
8. If required set minimum operating time for this curve by using parameter *tMin_OC1* (default value 0.05s)
9. Set *PickupCurr_OC1* to value 185%
10. Set *VCntrlMode_OC1* to *On*
11. Set *VDepMode_OC1* to *Slope*
12. Set *VDepFact_OC1* to value 0.25
13. Set *VHighLimit_OC1* to value 100%
14. Set *VLowLimit_OC1* to value 25%

Proper operation of the CVGAPC function made in this way can easily be verified by secondary injection. All other settings can be left at the default values. Furthermore the other built-in protection elements can be used for other protection and alarming purposes.

Loss of excitation protection for a generator

Example will be given how by using positive sequence directional overcurrent protection element within a CVGAPC function, loss of excitation protection for a generator can be achieved. Let us assume that from rated generator data the following values are calculated:

- Maximum generator capability to contentiously absorb reactive power at zero active loading 38% of the generator MVA rating
- Generator pull-out angle 84 degrees

This functionality can be achieved by using one CVGAPC function. The following shall be done in order to insure proper operation of the function:

1. Connect three-phase generator currents and three-phase generator voltages to one CVGAPC instance (for example, GF02)
2. Set parameter *CurrentInput* to *PosSeq*
3. Set parameter *VoltageInput* to *PosSeq*
4. Set base current value to the rated generator current primary amperes
5. Set base voltage value to the rated generator phase-to-phase voltage in kV
6. Set parameter *RCADir* to value -84 degree (that is, current lead voltage for this angle)
7. Set parameter *ROADir* to value 90 degree
8. Set parameter *LowVolt_VM* to value 5%
9. Enable one overcurrent step (for example, OC1)
10. Select parameter *CurveType_OC1* to value *IEC Def. Time*
11. Set parameter *PickupCurr_OC1* to value 38%
12. Set parameter *tDef_OC1* to value 2.0s (typical setting)
13. Set parameter *DirMode_OC1* to *Forward*
14. Set parameter *DirPrinc_OC1* to *IcosPhi&V*
15. Set parameter *ActLowVolt1_VM* to *Block*

Proper operation of the CVGAPC function made in this way can easily be verified by secondary injection. All other settings can be left at the default values. However it shall be noted that set values for RCA & ROA angles will be applicable for OC2 step if directional feature is enabled for this step as well. Figure 37 shows overall protection characteristic

Furthermore the other build-in protection elements can be used for other protection and alarming purposes.

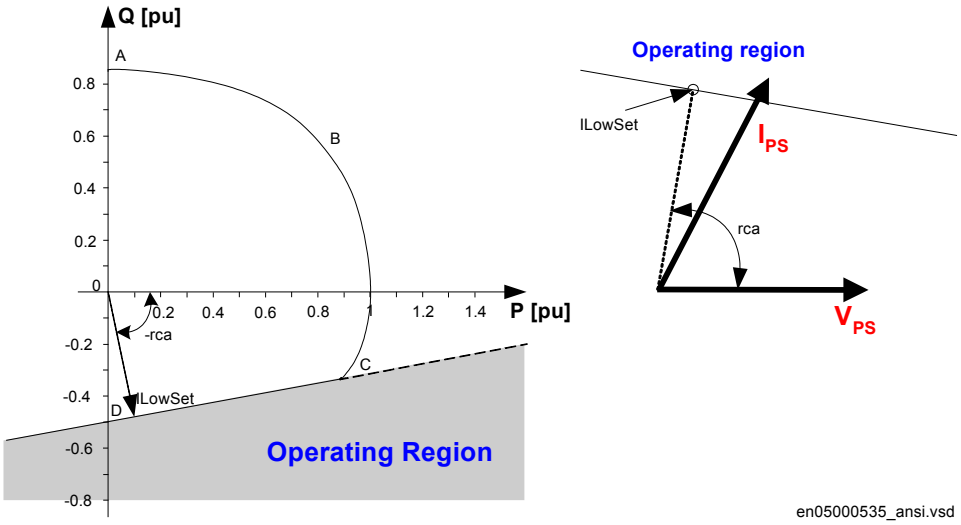

Figure 37: Loss of excitation

3.9.1.3 Setting parameters

Table 54: CVGAPC Group settings (basic)

Name	Values (Range)	Unit	Step	Default	Description
Operation	Disabled Enabled	-	-	Disabled	Disable/Enable Operation
CurrentInput	Phase A Phase B Phase C PosSeq NegSeq 3*ZeroSeq MaxPh MinPh UnbalancePh Phase AB Phase BC Phase CA MaxPh-Ph MinPh-Ph UnbalancePh-Ph	-	-	MaxPh	Select current signal which will be measured inside function
IBase	1 - 99999	A	1	3000	Base Current
VoltageInput	Phase A Phase B Phase C PosSeq -NegSeq -3*ZeroSeq MaxPh MinPh UnbalancePh Phase AB Phase BC Phase CA MaxPh-Ph MinPh-Ph UnbalancePh-Ph	-	-	MaxPh	Select voltage signal which will be measured inside function
VBase	0.05 - 2000.00	kV	0.05	400.00	Base Voltage
OperHarmRestr	Disabled Enabled	-	-	Disabled	Disable/Enable operation of 2nd harmonic restrain
I_2nd/I_fund	10.0 - 50.0	%	1.0	20.0	Ratio of second to fundamental current harmonic in %
EnRestrainCurr	Disabled Enabled	-	-	Disabled	Disable/Enable current restrain function
RestrCurrInput	PosSeq NegSeq 3*ZeroSeq Max	-	-	PosSeq	Select current signal which will be used for current restrain
RestrCurrCoeff	0.00 - 5.00	-	0.01	0.00	Restraining current coefficient
RCADir	-180 - 180	Deg	1	-75	Relay Characteristic Angle
ROADir	1 - 90	Deg	1	75	Relay Operate Angle

Table continues on next page

Name	Values (Range)	Unit	Step	Default	Description
LowVolt_VM	0.0 - 5.0	%VB	0.1	0.5	Below this level in % of Vbase setting ActLowVolt takes over
Operation_OC1	Disabled Enabled	-	-	Disabled	Disable/Enable Operation of OC1
PickupCurr_OC1	2.0 - 5000.0	%IB	1.0	120.0	Pickup current for OC1 in % of Ibase
CurveType_OC1	ANSI Ext. inv. ANSI Very inv. ANSI Norm. inv. ANSI Mod. inv. ANSI Def. Time L.T.E. inv. L.T.V. inv. L.T. inv. IEC Norm. inv. IEC Very inv. IEC inv. IEC Ext. inv. IEC S.T. inv. IEC L.T. inv. IEC Def. Time Programmable RI type RD type	-	-	ANSI Def. Time	Selection of time delay curve type for OC1
tDef_OC1	0.00 - 6000.00	s	0.01	0.50	Independent (definitive) time delay of OC1
TD_OC1	0.05 - 999.00	-	0.01	0.30	Time multiplier for the dependent time delay for OC1
IMin1	1 - 10000	%IB	1	100	Minimum operate current for step1in% of IBase
tMin_OC1	0.00 - 6000.00	s	0.01	0.05	Minimum operate time for IEC IDMT curves for OC1
VCntrlMode_OC1	Voltage control Input control Volt/Input control Disabled	-	-	Disabled	Control mode for voltage controlled OC1 function
VDepMode_OC1	Step Slope	-	-	Step	Voltage dependent mode OC1 (step, slope)
VDepFact_OC1	0.02 - 5.00	-	0.01	1.00	Multiplying factor for current pickup when OC1 is voltage dependent
VLowLimit_OC1	1.0 - 200.0	%VB	0.1	50.0	Voltage low limit setting OC1 in % of Vbase
VHighLimit_OC1	1.0 - 200.0	%VB	0.1	100.0	Voltage high limit setting OC1 in % of Vbase
HarmRestr_OC1	Disabled Enabled	-	-	Disabled	Enable block of OC1 by 2nd harmonic restrain
DirMode_OC1	Non-directional Forward Reverse	-	-	Non-directional	Directional mode of OC1 (nondir, forward,reverse)
DirPrinc_OC1	I&V IcosPhi&U	-	-	I&V	Measuring on IandV or IcosPhiandV for OC1
ActLowVolt1_VM	Non-directional Block Memory	-	-	Non-directional	Low voltage level action for Dir_OC1 (Nodir, Blk, Mem)

Table continues on next page

Name	Values (Range)	Unit	Step	Default	Description
Operation_OC2	Disabled Enabled	-	-	Disabled	Disable/Enable Operation od OC2
PickupCurr_OC2	2.0 - 5000.0	%IB	1.0	120.0	Pickup current for OC2 in % of Ibase
CurveType_OC2	ANSI Ext. inv. ANSI Very inv. ANSI Norm. inv. ANSI Mod. inv. ANSI Def. Time L.T.E. inv. L.T.V. inv. L.T. inv. IEC Norm. inv. IEC Very inv. IEC inv. IEC Ext. inv. IEC S.T. inv. IEC L.T. inv. IEC Def. Time Programmable RI type RD type	-	-	ANSI Def. Time	Selection of time delay curve type for OC2
tDef_OC2	0.00 - 6000.00	s	0.01	0.50	Independent (definitive) time delay of OC2
TD_OC2	0.05 - 999.00	-	0.01	0.30	Time multiplier for the dependent time delay for OC2
IMin2	1 - 10000	%IB	1	50	Minimum operate current for step2 in % of IBase
tMin_OC2	0.00 - 6000.00	s	0.01	0.05	Minimum operate time for IEC IDMT curves for OC2
VCntrlMode_OC2	Voltage control Input control Volt/Input control Disabled	-	-	Disabled	Control mode for voltage controlled OC2 function
VDepMode_OC2	Step Slope	-	-	Step	Voltage dependent mode OC2 (step, slope)
VDepFact_OC2	0.02 - 5.00	-	0.01	1.00	Multiplying factor for current pickup when OC2 is voltage dependent
VLowLimit_OC2	1.0 - 200.0	%VB	0.1	50.0	Voltage low limit setting OC2 in % of Vbase
VHighLimit_OC2	1.0 - 200.0	%VB	0.1	100.0	Voltage high limit setting OC2 in % of Vbase
HarmRestr_OC2	Disabled Enabled	-	-	Disabled	Enable block of OC2 by 2nd harmonic restrain
DirMode_OC2	Non-directional Forward Reverse	-	-	Non-directional	Directional mode of OC2 (nondir, forward,reverse)
DirPrinc_OC2	I&V IcosPhi&U	-	-	I&V	Measuring on IandV or IcosPhiandV for OC2
ActLowVolt2_VM	Non-directional Block Memory	-	-	Non-directional	Low voltage level action for Dir_OC2 (Nodir, Blk, Mem)

Table continues on next page

Name	Values (Range)	Unit	Step	Default	Description
Operation_UC1	Disabled Enabled	-	-	Disabled	Disable/Enable operation of UC1
EnBlkLowI_UC1	Disabled Enabled	-	-	Disabled	Enable internal low current level blocking for UC1
BlkLowCurr_UC1	0 - 150	%IB	1	20	Internal low current blocking level for UC1 in % of Ibase
PickupCurr_UC1	2.0 - 150.0	%IB	1.0	70.0	Operate undercurrent level for UC1 in % of Ibase
tDef_UC1	0.00 - 6000.00	s	0.01	0.50	Independent (definitive) time delay of UC1
tResetDef_UC1	0.00 - 6000.00	s	0.01	0.00	Reset time delay used in IEC Definite Time curve UC1
HarmRestr_UC1	Disabled Enabled	-	-	Disabled	Enable block of UC1 by 2nd harmonic restrain
Operation_UC2	Disabled Enabled	-	-	Disabled	Disable/Enable operation of UC2
EnBlkLowI_UC2	Disabled Enabled	-	-	Disabled	Enable internal low current level blocking for UC2
BlkLowCurr_UC2	0 - 150	%IB	1	20	Internal low current blocking level for UC2 in % of Ibase
PickupCurr_UC2	2.0 - 150.0	%IB	1.0	70.0	Operate undercurrent level for UC2 in % of Ibase
tDef_UC2	0.00 - 6000.00	s	0.01	0.50	Independent (definitive) time delay of UC2
HarmRestr_UC2	Disabled Enabled	-	-	Disabled	Enable block of UC2 by 2nd harmonic restrain
Operation_OV1	Disabled Enabled	-	-	Disabled	Disable/Enable operation of OV1
PickupVolt_OV1	2.0 - 200.0	%VB	0.1	150.0	Operate voltage level for OV1 in % of Vbase
CurveType_OV1	Definite time Inverse curve A Inverse curve B Inverse curve C Prog. inv. curve	-	-	Definite time	Selection of time delay curve type for OV1
tDef_OV1	0.00 - 6000.00	s	0.01	1.00	Operate time delay in sec for definite time use of OV1
tMin_OV1	0.00 - 6000.00	s	0.01	0.05	Minimum operate time for Inverse-Time curves for OV1
TD_OV1	0.05 - 999.00	-	0.01	0.30	Time multiplier for the dependent time delay for OV1
Operation_OV2	Disabled Enabled	-	-	Disabled	Disable/Enable operation of OV2
PickupVolt_OV2	2.0 - 200.0	%VB	0.1	150.0	Pickup voltage for OV2 in % of Vbase
CurveType_OV2	Definite time Inverse curve A Inverse curve B Inverse curve C Prog. inv. curve	-	-	Definite time	Selection of time delay curve type for OV2

Table continues on next page

Name	Values (Range)	Unit	Step	Default	Description
tDef_OV2	0.00 - 6000.00	s	0.01	1.00	Operate time delay in sec for definite time use of OV2
tMin_OV2	0.00 - 6000.00	s	0.01	0.05	Minimum operate time for Inverse-Time curves for OV2
TD_OV2	0.05 - 999.00	-	0.01	0.30	Time multiplier for the dependent time delay for OV2
Operation_UV1	Disabled Enabled	-	-	Disabled	Disable/Enable operation of UV1
PickupVolt_UV1	2.0 - 150.0	%VB	0.1	50.0	Operate undervoltage level for UV1 in % of Vbase
CurveType_UV1	Definite time Inverse curve A Inverse curve B Prog. inv. curve	-	-	Definite time	Selection of time delay curve type for UV1
tDef_UV1	0.00 - 6000.00	s	0.01	1.00	Operate time delay in sec for definite time use of UV1
tMin_UV1	0.00 - 6000.00	s	0.01	0.05	Minimum operate time for Inverse-Time curves for UV1
TD_UV1	0.05 - 999.00	-	0.01	0.30	Time multiplier for the dependent time delay for UV1
EnBlkLowV_UV1	Disabled Enabled	-	-	Enabled	Enable internal low voltage level blocking for UV1
BlkLowVolt_UV1	0.0 - 5.0	%VB	0.1	0.5	Internal low voltage blocking level for UV1 in % of Vbase
Operation_UV2	Disabled Enabled	-	-	Disabled	Disable/Enable operation of UV2
PickupVolt_UV2	2.0 - 150.0	%VB	0.1	50.0	Pickup undervoltage for UV2 in % of Vbase
CurveType_UV2	Definite time Inverse curve A Inverse curve B Prog. inv. curve	-	-	Definite time	Selection of time delay curve type for UV2
tDef_UV2	0.00 - 6000.00	s	0.01	1.00	Operate time delay in sec for definite time use of UV2
tMin_UV2	0.00 - 6000.00	s	0.01	0.05	Minimum operate time for Inverse-Time curves for UV2
TD_UV2	0.05 - 999.00	-	0.01	0.30	Time multiplier for the dependent time delay for UV2
EnBlkLowV_UV2	Disabled Enabled	-	-	Enabled	Enable internal low voltage level blocking for UV2
BlkLowVolt_UV2	0.0 - 5.0	%VB	0.1	0.5	Internal low voltage blocking level for UV2 in % of Vbase

Table 55: CVGAPC Group settings (advanced)

Name	Values (Range)	Unit	Step	Default	Description
MultPU_OC1	1.0 - 10.0	-	0.1	2.0	Multiplier for scaling the current setting value for OC1
ResCrvType_OC1	Instantaneous IEC Reset ANSI reset	-	-	Instantaneous	Selection of reset curve type for OC1
tResetDef_OC1	0.00 - 6000.00	s	0.01	0.00	Reset time delay used in IEC Definite Time curve OC1
P_OC1	0.001 - 10.000	-	0.001	0.020	Parameter P for customer programmable curve for OC1
A_OC1	0.000 - 999.000	-	0.001	0.140	Parameter A for customer programmable curve for OC1
B_OC1	0.000 - 99.000	-	0.001	0.000	Parameter B for customer programmable curve for OC1
C_OC1	0.000 - 1.000	-	0.001	1.000	Parameter C for customer programmable curve for OC1
PR_OC1	0.005 - 3.000	-	0.001	0.500	Parameter PR for customer programmable curve for OC1
TR_OC1	0.005 - 600.000	-	0.001	13.500	Parameter TR for customer programmable curve for OC1
CR_OC1	0.1 - 10.0	-	0.1	1.0	Parameter CR for customer programmable curve for OC1
MultPU_OC2	1.0 - 10.0	-	0.1	2.0	Multiplier for scaling the current setting value for OC2
ResCrvType_OC2	Instantaneous IEC Reset ANSI reset	-	-	Instantaneous	Selection of reset curve type for OC2
tResetDef_OC2	0.00 - 6000.00	s	0.01	0.00	Reset time delay used in IEC Definite Time curve OC2
P_OC2	0.001 - 10.000	-	0.001	0.020	Parameter P for customer programmable curve for OC2
A_OC2	0.000 - 999.000	-	0.001	0.140	Parameter A for customer programmable curve for OC2
B_OC2	0.000 - 99.000	-	0.001	0.000	Parameter B for customer programmable curve for OC2
C_OC2	0.000 - 1.000	-	0.001	1.000	Parameter C for customer programmable curve for OC2
PR_OC2	0.005 - 3.000	-	0.001	0.500	Parameter PR for customer programmable curve for OC2
TR_OC2	0.005 - 600.000	-	0.001	13.500	Parameter TR for customer programmable curve for OC2
CR_OC2	0.1 - 10.0	-	0.1	1.0	Parameter CR for customer programmable curve for OC2
tResetDef_UC2	0.00 - 6000.00	s	0.01	0.00	Reset time delay used in IEC Definite Time curve UC2

Table continues on next page

Name	Values (Range)	Unit	Step	Default	Description
ResCrvType_OV1	Instantaneous Frozen timer Linearly decreased	-	-	Instantaneous	Selection of reset curve type for OV1
tResetDef_OV1	0.00 - 6000.00	s	0.01	0.00	Reset time delay in sec for definite time use of OV1
tResetIDMT_OV1	0.00 - 6000.00	s	0.01	0.00	Reset time delay in sec for Inverse-Time curves for OV1
A_OV1	0.005 - 999.000	-	0.001	0.140	Parameter A for customer programmable curve for OV1
B_OV1	0.500 - 99.000	-	0.001	1.000	Parameter B for customer programmable curve for OV1
C_OV1	0.000 - 1.000	-	0.001	1.000	Parameter C for customer programmable curve for OV1
D_OV1	0.000 - 10.000	-	0.001	0.000	Parameter D for customer programmable curve for OV1
P_OV1	0.001 - 10.000	-	0.001	0.020	Parameter P for customer programmable curve for OV1
ResCrvType_OV2	Instantaneous Frozen timer Linearly decreased	-	-	Instantaneous	Selection of reset curve type for OV2
tResetDef_OV2	0.00 - 6000.00	s	0.01	0.00	Reset time delay in sec for definite time use of OV2
tResetIDMT_OV2	0.00 - 6000.00	s	0.01	0.00	Reset time delay in sec for Inverse-Time curves for OV2
A_OV2	0.005 - 999.000	-	0.001	0.140	Parameter A for customer programmable curve for OV2
B_OV2	0.500 - 99.000	-	0.001	1.000	Parameter B for customer programmable curve for OV2
C_OV2	0.000 - 1.000	-	0.001	1.000	Parameter C for customer programmable curve for OV2
D_OV2	0.000 - 10.000	-	0.001	0.000	Parameter D for customer programmable curve for OV2
P_OV2	0.001 - 10.000	-	0.001	0.020	Parameter P for customer programmable curve for OV2
ResCrvType_UV1	Instantaneous Frozen timer Linearly decreased	-	-	Instantaneous	Selection of reset curve type for UV1
tResetDef_UV1	0.00 - 6000.00	s	0.01	0.00	Reset time delay in sec for definite time use of UV1
tResetIDMT_UV1	0.00 - 6000.00	s	0.01	0.00	Reset time delay in sec for Inverse-Time curves for UV1
A_UV1	0.005 - 999.000	-	0.001	0.140	Parameter A for customer programmable curve for UV1
B_UV1	0.500 - 99.000	-	0.001	1.000	Parameter B for customer programmable curve for UV1

Table continues on next page

Name	Values (Range)	Unit	Step	Default	Description
C_UV1	0.000 - 1.000	-	0.001	1.000	Parameter C for customer programmable curve for UV1
D_UV1	0.000 - 10.000	-	0.001	0.000	Parameter D for customer programmable curve for UV1
P_UV1	0.001 - 10.000	-	0.001	0.020	Parameter P for customer programmable curve for UV1
ResCrvType_UV2	Instantaneous Frozen timer Linearly decreased	-	-	Instantaneous	Selection of reset curve type for UV2
tResetDef_UV2	0.00 - 6000.00	s	0.01	0.00	Reset time delay in sec for definite time use of UV2
tResetIDMT_UV2	0.00 - 6000.00	s	0.01	0.00	Reset time delay in sec for Inverse-Time curves for UV2
A_UV2	0.005 - 999.000	-	0.001	0.140	Parameter A for customer programmable curve for UV2
B_UV2	0.500 - 99.000	-	0.001	1.000	Parameter B for customer programmable curve for UV2
C_UV2	0.000 - 1.000	-	0.001	1.000	Parameter C for customer programmable curve for UV2
D_UV2	0.000 - 10.000	-	0.001	0.000	Parameter D for customer programmable curve for UV2
P_UV2	0.001 - 10.000	-	0.001	0.020	Parameter P for customer programmable curve for UV2

3.10 Secondary system supervision

3.10.1 Current circuit supervision CCSRDIF (87)

Function description	IEC 61850 identification	IEC 60617 identification	ANSI/IEEE C37.2 device number
Current circuit supervision	CCSRDIF	-	87

3.10.1.1 Application

Open or short circuited current transformer cores can cause unwanted operation of many protection functions such as differential, ground-fault current and negative-sequence current functions. When currents from two independent three-phase sets of CTs, or CT cores, measuring the same primary currents are available, reliable current circuit supervision can be arranged by comparing the currents from the two sets. If an error in any CT circuit is detected, the protection functions concerned can be blocked and an alarm given.

In case of large currents, unequal transient saturation of CT cores with different remanence or different saturation factor may result in differences in the secondary currents from the two CT sets. Unwanted blocking of protection functions during the transient stage must then be avoided.

Current circuit supervision CCSRDIF (87) must be sensitive and have short operate time in order to prevent unwanted tripping from fast-acting, sensitive numerical protections in case of faulty CT secondary circuits.

Open CT circuits creates extremely high voltages in the circuits which is extremely dangerous for the personell. It can also damage the insulation and cause new problems.
The application shall, thus, be done with this in consideration, especially if the protection functions are blocked.

3.10.1.2 Setting guidelines

Current circuit supervision CCSRDIF (87) compares the residual current from a three-phase set of current transformer cores with the neutral point current on a separate input taken from another set of cores on the same current transformer.

The minimum operate current, *IMinOp*, must be set as a minimum to twice the residual current in the supervised CT circuits under normal service conditions and rated primary current.

The parameter *Pickup_Block* is normally set at *150%* to block the function during transient conditions.

The FAIL output is connected to the blocking input of the protection function to be blocked at faulty CT secondary circuits.

3.10.1.3 Setting parameters

Table 56: CCSRDIF (87) Group settings (basic)

Name	Values (Range)	Unit	Step	Default	Description
Operation	Disabled Enabled	-	-	Disabled	Disable/Enable Operation
IBase	1 - 99999	A	1	3000	IBase value for current pickup detectors
IMinOp	5 - 200	%IB	1	20	Minimum operate current differential pickup in % of IBase

Table 57: CCSRDIF (87) Group settings (advanced)

Name	Values (Range)	Unit	Step	Default	Description
Pickup_Block	5 - 500	%IB	1	150	Block of the function at high phase current, in % of IBase

3.10.2 Fuse failure supervision SDDRFUF

Function description	IEC 61850 identification	IEC 60617 identification	ANSI/IEEE C37.2 device number
Fuse failure supervision	SDDRFUF	-	-

3.10.2.1 Application

Different protection functions within the protection IED, operates on the basis of the measured voltage in the relay point. Examples are:

- distance protection function
- undervoltage function
- energizing check function and voltage check for the weak infeed logic

These functions can operate unintentionally if a fault occurs in the secondary circuits between the voltage instrument transformers and the IED.

It is possible to use different measures to prevent such unwanted operations. Miniature circuit breakers in the voltage measuring circuits, located as close as possible to the voltage instrument transformers, are one of them. Separate fuse-failure monitoring IEDs or elements within the protection and monitoring devices are another possibilities. These solutions are combined to get the best possible effect in the fuse failure supervision function (SDDRFUF).

SDDRFUF function built into the IED products can operate on the basis of external binary signals from the miniature circuit breaker or from the line disconnector. The first case influences the operation of all voltage-dependent functions while the second one does not affect the impedance measuring functions.

The negative sequence detection algorithm, based on the negative-sequence measuring quantities, a high value of voltage $3V_2$ without the presence of the negative-sequence current $3I_2$, is recommended for use in isolated or high-impedance grounded networks.

The zero sequence detection algorithm, based on the zero sequence measuring quantities, a high value of voltage $3V_0$ without the presence of the residual current $3I_0$, is recommended for use in directly or low impedance grounded networks. In cases

where the line can have a weak-infeed of zero sequence current this function shall be avoided.

A criterion based on delta current and delta voltage measurements can be added to the fuse failure supervision function in order to detect a three phase fuse failure. This is beneficial for example during three phase transformer switching.

3.10.2.2 Setting guidelines

General

The negative and zero sequence voltages and currents always exist due to different non-symmetries in the primary system and differences in the current and voltage instrument transformers. The minimum value for the operation of the current and voltage measuring elements must always be set with a safety margin of 10 to 20%, depending on the system operating conditions.

Pay special attention to the dissymmetry of the measuring quantities when the function is used on longer untransposed lines, on multicircuit lines and so on.

The settings of negative sequence, zero sequence and delta algorithm are in percent of the base voltage and base current for the function, *VBase* and *IBase* respectively. Set *VBase* to the primary rated phase-phase voltage of the potential voltage transformer and *IBase* to the primary rated current of the current transformer.

Setting of common parameters

Set the operation mode selector *Operation* to *On* to release the fuse failure function.

The voltage threshold *VPPU* is used to identify low voltage condition in the system. Set *VPPU* below the minimum operating voltage that might occur during emergency conditions. We propose a setting of approximately 70% of *VBase*.

The drop off time of 200 ms for dead phase detection makes it recommended to always set *SealIn* to *Enabled* since this will secure a fuse failure indication at persistent fuse fail when closing the local breaker when the line is already energized from the other end. When the remote breaker closes the voltage will return except in the phase that has a persistent fuse fail. Since the local breaker is open there is no current and the dead phase indication will persist in the phase with the blown fuse. When the local breaker closes the current will start to flow and the function detects the fuse failure situation. But due to the 200 ms drop off timer the output BLKZ will not be activated until after 200 ms. This means that distance functions are not blocked and due to the “no voltage but current” situation might issue a trip.

The operation mode selector *OpModeSel* has been introduced for better adaptation to system requirements. The mode selector makes it possible to select interactions between the negative sequence and zero sequence algorithm. In normal applications the *OpModeSel* is set to either *UNsINs* for selecting negative sequence algorithm or

UZsIZs for zero sequence based algorithm. If system studies or field experiences shows that there is a risk that the fuse failure function will not be activated due to the system conditions, the dependability of the fuse failure function can be increased if the *OpModeSel* is set to *UZsIZs OR UNsINs* or *OptimZsNs*. In mode*UZsIZs OR UNsINs* both the negative and zero sequence based algorithm is activated and working in an OR-condition. Also in mode *OptimZsNs* both the negative and zero sequence algorithm are activated and the one that has the highest magnitude of measured negative or zero sequence current will operate. If there is a requirement to increase the security of the fuse failure function *OpModeSel* can be selected to *UZsIZs AND UNsINs* which gives that both negative and zero sequence algorithm is activated working in an AND-condition, that is, both algorithm must give condition for block in order to activate the output signals BLKU or BLKZ.

Negative sequence based

The relay setting value *3V2PU* is given in percentage of the base voltage *VBase* and should not be set lower than according to equation 51.

$$3V2PU = \frac{3V2}{VBase} \cdot 100$$

(Equation 51)

where:

3V2PU is the maximal negative sequence voltage during normal operation conditions, plus a margin of 10...20%

VBase is the setting of base voltage for the function

The setting of the current limit *3I2PU* is in percentage of parameter *IBase*. The setting of *3I2PU* must be higher than the normal unbalance current that might exist in the system and can be calculated according to equation 52.

$$3I2PU = \frac{3I2}{IBase} \cdot 100$$

(Equation 52)

where:

3I2 is the maximal negative sequence current during normal operating conditions, plus a margin of 10...20%

IBase is the setting of base current for the function

Zero sequence based

The IED setting value *3V0PU* is given in percentage of the base voltage *VBase*, where *VBase* is the primary base voltage, normally the rated voltage of the primary potential voltage transformer winding. The setting of *3V0PU* should not be set lower than according to equation 53.

$$3V0PU = \frac{3V0}{VBase} \cdot 100$$

(Equation 53)

where:

3V0 is the maximal zero sequence voltage during normal operation conditions, plus a margin of 10...20%

VBase is the setting of base voltage for the function

The setting of the current limit *3I0>* is done in percentage of *IBase*. The setting of pickup must be higher than the normal unbalance current that might exist in the system. The setting can be calculated according to equation 54.

$$3I0PU = \frac{3I0}{IBase} \cdot 100$$

(Equation 54)

where:

3I0PU is the maximal zero sequence current during normal operating conditions, plus a margin of 10...20%

IBase is the setting of base current for the function

Delta V and delta I

Set the operation mode selector *OpDVDI* to *Enabled* if the delta function shall be in operation.

The setting of *DVPU* should be set high (approximately 60% of *VBase*) and the current threshold *DIPU* low (approximately 10% of *IBase*) to avoid unwanted operation due to normal switching conditions in the network. The delta current and delta voltage function shall always be used together with either the negative or zero sequence algorithm. If *VSetprim* is the primary voltage for operation of dU/dt and *ISetprim* the primary current for operation of dI/dt, the setting of *DVPU* and *DIPU* will be given according to equation 55 and equation 56.

$$DVPU = \frac{VSetprim}{VBase} \cdot 100$$

(Equation 55)

$$DIPU = \frac{ISetprim}{IBase} \cdot 100$$

(Equation 56)

The voltage thresholds *VPPU* is used to identify low voltage condition in the system. Set *VPPU* below the minimum operating voltage that might occur during emergency conditions. A setting of approximately 70% of *VBase* is recommended.

The current threshold *50P* shall be set lower than the *IMinOp* for the distance protection function. A 5...10% lower value is recommended.

Dead line detection

The condition for operation of the dead line detection is set by the parameters *IDLDPU* for the current threshold and *VDLDPU* for the voltage threshold.

Set the *IDLDPU* with a sufficient margin below the minimum expected load current. A safety margin of at least 15-20% is recommended. The operate value must however exceed the maximum charging current of an overhead line, when only one phase is disconnected (mutual coupling to the other phases).

Set the *VDLDPU* with a sufficient margin below the minimum expected operating voltage. A safety margin of at least 15% is recommended.

3.10.2.3 Setting parameters

Table 58: SDDRFUF Group settings (basic)

Name	Values (Range)	Unit	Step	Default	Description
Operation	Disabled Enabled	-	-	Enabled	Disable/Enable Operation
IBase	1 - 99999	A	1	3000	Base current
VBase	0.05 - 2000.00	kV	0.05	400.00	Base voltage
OpModeSel	Disabled V2I2 V0I0 V0I0 OR V2I2 V0I0 AND V2I2 OptimZsNs	-	-	V0I0	Operating mode selection
3V0PU	1 - 100	%VB	1	30	Pickup of residual overvoltage element in % of VBase

Table continues on next page

Name	Values (Range)	Unit	Step	Default	Description
3I0PU	1 - 100	%IB	1	10	Pickup of residual undercurrent element in % of IBase
3V2PU	1 - 100	%VB	1	30	Pickup of negative sequence overvoltage element in % of VBase
3I2PU	1 - 100	%IB	1	10	Pickup of negative sequence undercurrent element in % of IBase
OpDVDI	Disabled Enabled	-	-	Disabled	Operation of change based function Disable/ Enable
DVPU	1 - 100	%VB	1	60	Pickup of change in phase voltage in % of VBase
DIPU	1 - 100	%IB	1	15	Pickup of change in phase current in % of IBase
VPPU	1 - 100	%VB	1	70	Pickup of phase voltage in % of VBase
IPPU	1 - 100	%IB	1	10	Pickup of phase current in % of IBase
SealIn	Disabled Enabled	-	-	Enabled	Seal in functionality Disable/Enable
VSealInPU	1 - 100	%VB	1	70	Pickup of seal-in phase voltage in % of VBase
IDLDPU	1 - 100	%IB	1	5	Pickup for phase current detection in % of IBase for dead line detection
VDLDPU	1 - 100	%VB	1	60	Pickup for phase voltage detection in % of VBase for dead line detection

3.11 Control

3.11.1 Apparatus control APC

3.11.1.1 Application

The apparatus control is a function for control and supervising of circuit breakers, disconnectors, and grounding switches within a bay. Permission to operate is given after evaluation of conditions from other functions such as interlocking, synchronism check, operator place selection and external or internal blockings.

Figure 38 gives an overview from what places the apparatus control function receive commands. Commands to an apparatus can be initiated from the Control Centre (CC), the station HMI or the local HMI on the IED front.

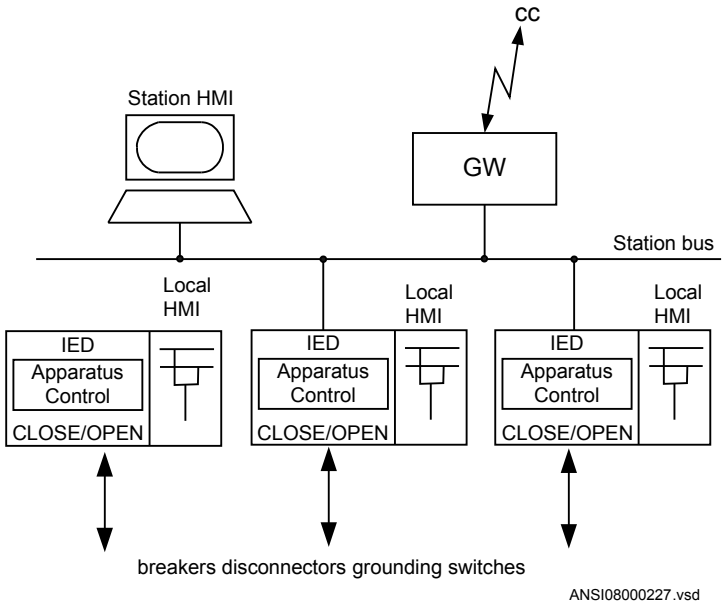

Figure 38: Overview of the apparatus control functions

Features in the apparatus control function:

- Operation of primary apparatuses
- Select-Execute principle to give high security
- Selection and reservation function to prevent simultaneous operation
- Selection and supervision of operator place
- Command supervision
- Block/deblock of operation
- Block/deblock of updating of position indications
- Substitution of position indications
- Overriding of interlocking functions
- Overriding of synchronism check
- Pole discrepancy supervision
- Operation counter
- Suppression of Mid position

The apparatus control function is realized by means of a number of function blocks designated:

- Switch controller SCSWI
- Circuit breaker SXCBR
- Circuit switch SXSWI
- Bay control QCBAY
- Position evaluation POS_EVAL
- Bay reserve QCRSV

- Reservation input RESIN
- Local remote LOCREM
- Local remote control LOCREMCTRL

SCSWI, SXCBR, SXSWI and CBAY are logical nodes according to IEC 61850. The signal flow between these function blocks appears in figure 39. To realize the reservation function, the function blocks Reservation input (RESIN) and Bay reserve (QCRSV) also are included in the apparatus control function. The application description for all these functions can be found below. The function SCILO in the figure below is the logical node for interlocking.

Control operation can be performed from the local IED HMI. If the administrator has defined users with the UMT tool, then the local/remote switch is under authority control. If not, the default (factory) user is the SuperUser that can perform control operations from the local IED HMI without LogOn. The default position of the local/remote switch is on remote.

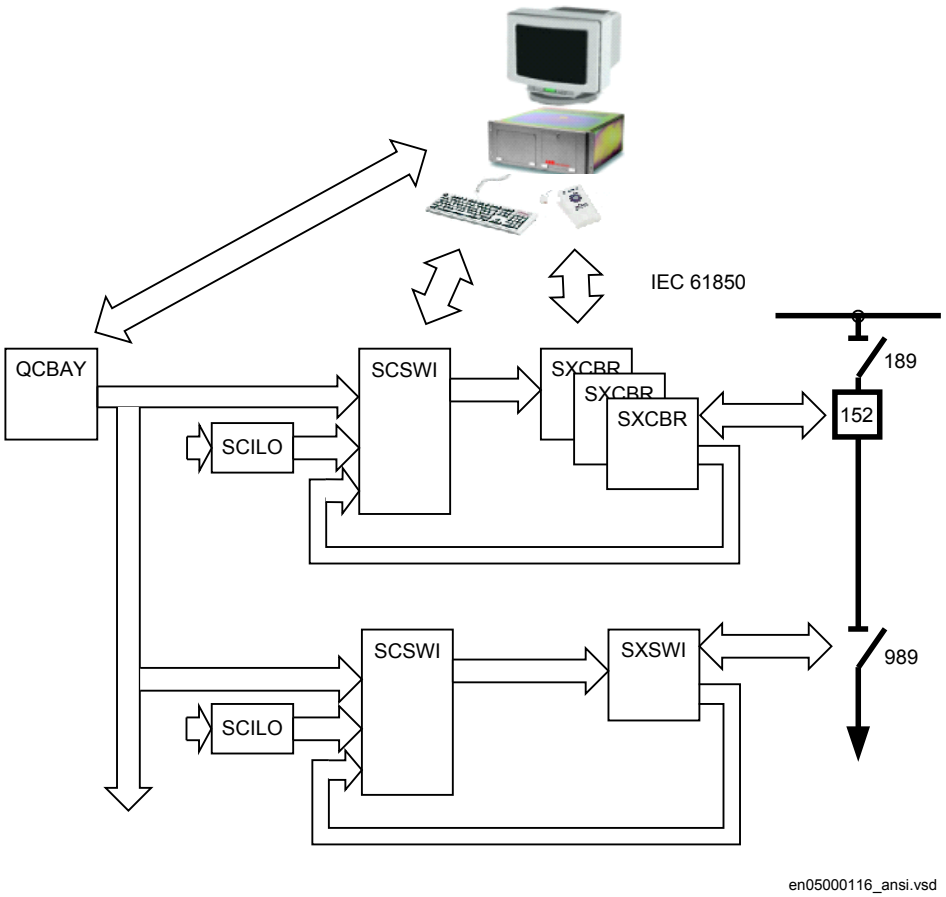

Figure 39: Signal flow between apparatus control function blocks

The IEC 61850 communication has always priority over binary inputs, e.g. a block command on binary inputs will not prevent commands over IEC 61850.

Bay control (QCBAY)

The Bay control (QCBAY) is used to handle the selection of the operator place per bay. The function gives permission to operate from two types of locations either from Remote (for example, control centre or station HMI) or from Local (local HMI on the IED) or from all (Local and Remote). The Local/Remote switch position can also be set to Off, which means no operator place selected that is, operation is not possible neither from local nor from remote.

QCBAY also provides blocking functions that can be distributed to different apparatuses within the bay. There are two different blocking alternatives:

- Blocking of update of positions
- Blocking of commands

The function does not have a corresponding functionality defined in the IEC 61850 standard, which means that this function is included as a vendor specific logical node.

3.11.1.2 Interaction between modules

A typical bay with apparatus control function consists of a combination of logical nodes or functions that are described here:

- The Switch controller (SCSWI) initializes all operations for one apparatus and performs the actual switching and is more or less the interface to the drive of one apparatus. It includes the position handling as well as the control of the position.
- The Circuit breaker (SXCBR) is the process interface to the circuit breaker for the apparatus control function.
- The Circuit switch (SXSWI) is the process interface to the disconnector or the grounding switch for the apparatus control function.
- The Bay control (QCBAY) fulfils the bay-level functions for the apparatuses, such as operator place selection and blockings for the complete bay.
- The Reservation (QCRSV) deals with the reservation function.
- The Four step residual overcurrent protection (EF4PTOC, 51N/67N) trips the breaker in case of Distance protection zones (ZMQPDIS, 21).
- The Protection trip logic (SMPPTRC, 94) connects the "trip" outputs of one or more protection functions to a common "trip" to be transmitted to SXCBR.
- The Autorecloser (SMBRREC, 79) consists of the facilities to automatically close a tripped breaker with respect to a number of configurable conditions.

- The logical node Interlocking (SCILO, 3) provides the information to SCSWI whether it is permitted to operate due to the switchyard topology. The interlocking conditions are evaluated with separate logic and connected to SCILO (3).
- The Synchronism, energizing check, and synchronizing (SESRSYN, 25) calculates and compares the voltage phasor difference from both sides of an open breaker with predefined switching conditions (synchronism check). Also the case that one side is dead (energizing-check) is included.
- The logical node Generic Automatic Process Control, GAPC, is an automatic function that reduces the interaction between the operator and the system. With one command, the operator can start a sequence that will end with a connection of a process object (for example a line) to one of the possible busbars.

The overview of the interaction between these functions is shown in figure 40 below.

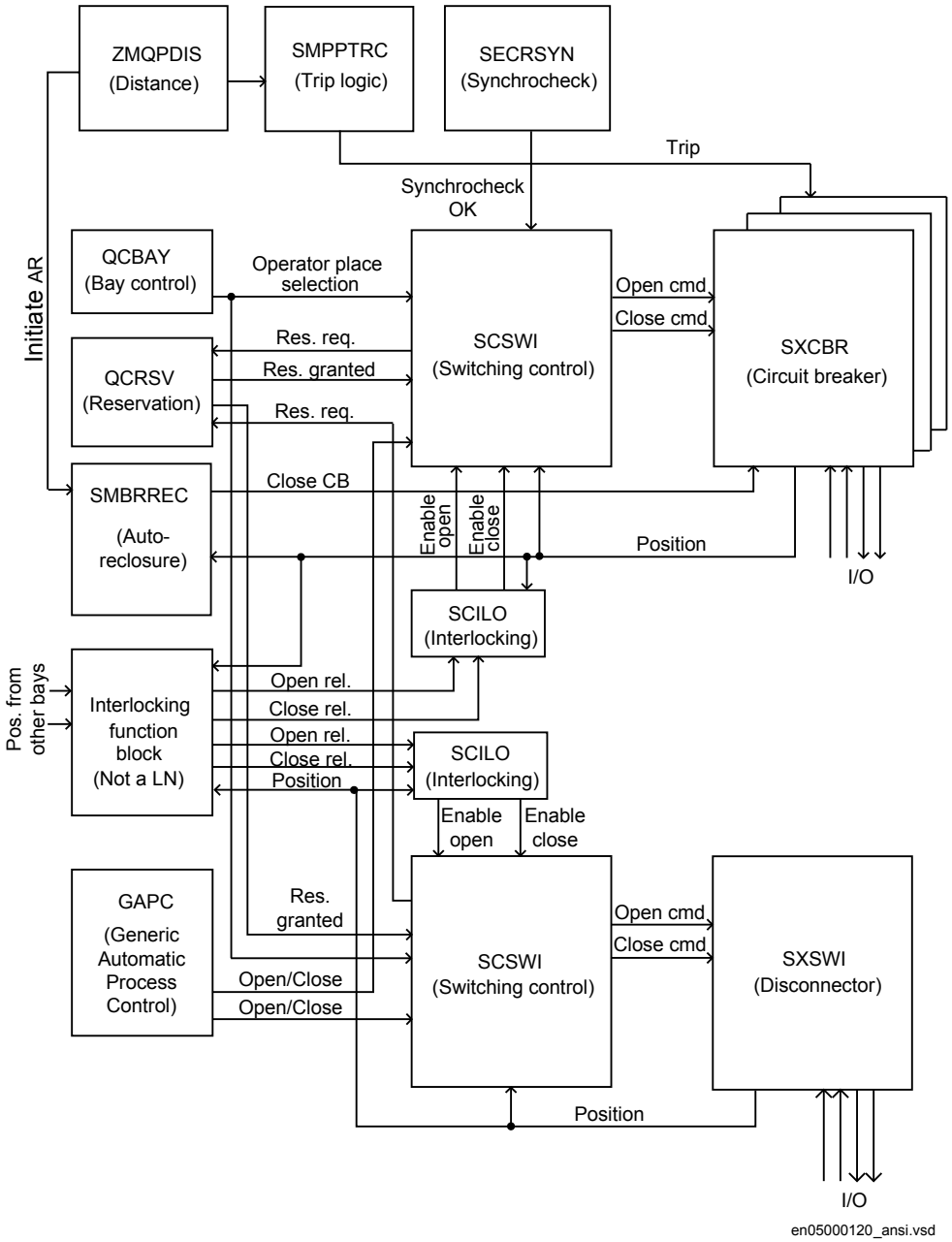

Figure 40: Example overview of the interactions between functions in a typical bay

3.11.1.3 Setting guidelines

The setting parameters for the apparatus control function are set via the local HMI or PCM600.

Bay control (QCBAY)

If the parameter *AllPSTOValid* is set to *No priority*, all originators from local and remote are accepted without any priority.

3.11.1.4 Setting parameters

Table 59: QCBAY Non group settings (basic)

Name	Values (Range)	Unit	Step	Default	Description
AllPSTOValid	Priority No priority	-	-	Priority	Priority of originators

Table 60: LOCREM Non group settings (basic)

Name	Values (Range)	Unit	Step	Default	Description
ControlMode	Internal LR-switch External LR-switch	-	-	Internal LR-switch	Control mode for internal/external LR-switch

3.11.2 Logic rotating switch for function selection and LHMI presentation SLGGIO

3.11.2.1 Application

The logic rotating switch for function selection and LHMI presentation function (SLGGIO) (or the selector switch function block, as it is also known) is used to get a selector switch functionality similar with the one provided by a hardware multi-position selector switch. Hardware selector switches are used extensively by utilities, in order to have different functions operating on pre-set values. Hardware switches are however sources for maintenance issues, lower system reliability and extended purchase portfolio. The virtual selector switches eliminate all these problems.

SLGGIO function block has two operating inputs (UP and DOWN), one blocking input (BLOCK) and one operator position input (PSTO).

SLGGIO can be activated both from the local HMI and from external sources (switches), via the IED binary inputs. It also allows the operation from remote (like the station computer). SWPOSN is an integer value output, giving the actual output number. Since the number of positions of the switch can be established by settings (see below), one must be careful in coordinating the settings with the configuration (if one sets the number of positions to x in settings – for example, there will be only the first x outputs available from the block in the configuration). Also the frequency of the (UP or DOWN) pulses should be lower than the setting *tPulse*.

From the local HMI, there are two modes of operating the switch: from the menu and from the Single-line diagram (SLD).

3.11.2.2 Setting guidelines

The following settings are available for the Logic rotating switch for function selection and LHMI presentation (SLGGIO) function:

Operation: Sets the operation of the function *Enabled* or *Disabled*.

NrPos: Sets the number of positions in the switch (max. 32). This setting influence the behavior of the switch when changes from the last to the first position.

OutType: *Steady* or *Pulsed*.

tPulse: In case of a pulsed output, it gives the length of the pulse (in seconds).

tDelay: The delay between the UP or DOWN activation signal positive front and the output activation.

StopAtExtremes: Sets the behavior of the switch at the end positions – if set to *Disabled*, when pressing UP while on first position, the switch will jump to the last position; when pressing DOWN at the last position, the switch will jump to the first position; when set to *Enabled*, no jump will be allowed.

3.11.2.3 Setting parameters

3.11.3 Selector mini switch VSGGIO

Function description	IEC 61850 identification	IEC 60617 identification	ANSI/IEEE C37.2 device number
Selector mini switch	VSGGIO	-	-

3.11.3.1 Application

Selector mini switch (VSGGIO) function is a multipurpose function used in the configuration tool in PCM600 for a variety of applications, as a general purpose switch. VSGGIO can be used for both acquiring an external switch position (through the IPOS1 and the IPOS2 inputs) and represent it through the single line diagram symbols (or use it in the configuration through the outputs POS1 and POS2) as well as, a command function (controlled by the PSTO input), giving switching commands through the CMDPOS12 and CMDPOS21 outputs.

The output POSITION is an integer output, showing the actual position as an integer number 0 – 3.

An example where VSGGIO is configured to switch Autorecloser enabled–disabled from a button symbol on the local HMI is shown in figure 41. The Close and Open buttons on the local HMI are normally used for enable–disable operations of the circuit breaker.

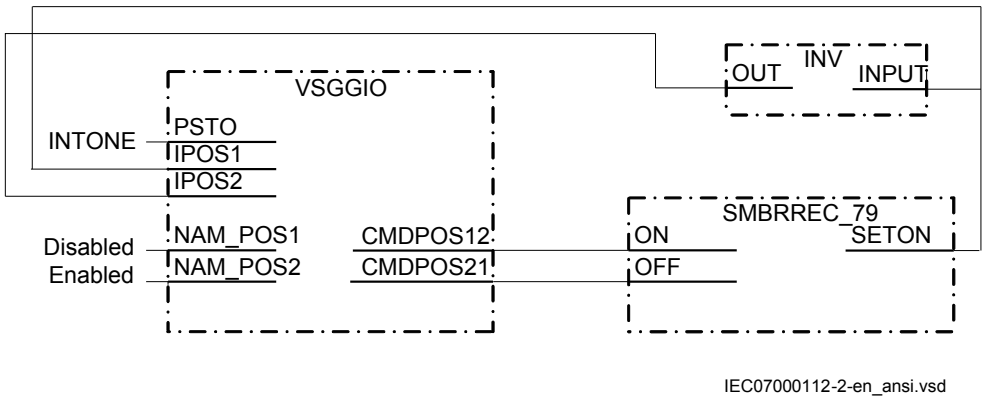

Figure 41: Control of Autorecloser from local HMI through Selector mini switch

VSGGIO is also provided with IEC 61850 communication so it can be controlled from SA system as well.

3.11.3.2 Setting guidelines

Selector mini switch (VSGGIO) function can generate pulsed or steady commands (by setting the *Mode* parameter). When pulsed commands are generated, the length of the pulse can be set using the *tPulse* parameter. Also, being accessible on the single line diagram (SLD), this function block has two control modes (settable through *CtlModel*): *Dir Norm* and *SBO Enh*.

3.11.3.3 Setting parameters

Table 61: VSGGIO Non group settings (basic)

Name	Values (Range)	Unit	Step	Default	Description
Operation	Disabled Enabled	-	-	Disabled	Disable/Enable Operation
CtlModel	Dir Norm SBO Enh	-	-	Dir Norm	Specifies the type for control model according to IEC 61850
Mode	Steady Pulsed	-	-	Pulsed	Operation mode
tSelect	0.000 - 60.000	s	0.001	30.000	Max time between select and execute signals
tPulse	0.000 - 60.000	s	0.001	0.200	Command pulse lenght

3.11.4 IEC61850 generic communication I/O functions DPGGIO

Function description	IEC 61850 identification	IEC 60617 identification	ANSI/IEEE C37.2 device number
IEC 61850 generic communication I/O functions	DPGGIO	-	-

3.11.4.1 Application

The IEC61850 generic communication I/O functions (DPGGIO) function block is used to send three logical outputs to other systems or equipment in the substation. The three inputs are named OPEN, CLOSE and VALID, since this function block is intended to be used as a position indicator block in interlocking and reservation station-wide logics.

3.11.4.2 Setting guidelines

The function does not have any parameters available in the local HMI or PCM600.

3.11.5 Single point generic control 8 signals SPC8GGIO

Function description	IEC 61850 identification	IEC 60617 identification	ANSI/IEEE C37.2 device number
Single point generic control 8 signals	SPC8GGIO	-	-

3.11.5.1 Application

The Single point generic control 8 signals (SPC8GGIO) function block is a collection of 8 single point commands, designed to bring in commands from REMOTE (SCADA) to those parts of the logic configuration that do not need complicated function blocks that have the capability to receive commands (for example SCSWI). In this way, simple commands can be sent directly to the IED outputs, without confirmation. Confirmation (status) of the result of the commands is supposed to be achieved by other means, such as binary inputs and SPGGIO function blocks.

PSTO is the universal operator place selector for all control functions. Even if PSTO can be configured to allow LOCAL or ALL operator positions, the only functional position usable with the SPC8GGIO function block is REMOTE.

3.11.5.2 Setting guidelines

The parameters for the single point generic control 8 signals (SPC8GGIO) function are set via the local HMI or PCM600.

Operation: turning the function operation *Enabled*/*Disabled*.

There are two settings for every command output (totally 8):

Latchedx: decides if the command signal for output *x* is *Latched* (steady) or *Pulsed*.

tPulsex: if *Latchedx* is set to *Pulsed*, then *tPulsex* will set the length of the pulse (in seconds).

3.11.5.3 Setting parameters

Table 62: SPC8GGIO Non group settings (basic)

Name	Values (Range)	Unit	Step	Default	Description
Operation	Disabled Enabled	-	-	Disabled	Operation Disabled/Enabled
Latched1	Pulsed Latched	-	-	Pulsed	Setting for pulsed/latched mode for output 1
tPulse1	0.01 - 6000.00	s	0.01	0.10	Output1 Pulse Time
Latched2	Pulsed Latched	-	-	Pulsed	Setting for pulsed/latched mode for output 2
tPulse2	0.01 - 6000.00	s	0.01	0.10	Output2 Pulse Time
Latched3	Pulsed Latched	-	-	Pulsed	Setting for pulsed/latched mode for output 3
tPulse3	0.01 - 6000.00	s	0.01	0.10	Output3 Pulse Time
Latched4	Pulsed Latched	-	-	Pulsed	Setting for pulsed/latched mode for output 4
tPulse4	0.01 - 6000.00	s	0.01	0.10	Output4 Pulse Time
Latched5	Pulsed Latched	-	-	Pulsed	Setting for pulsed/latched mode for output 5
tPulse5	0.01 - 6000.00	s	0.01	0.10	Output5 Pulse Time
Latched6	Pulsed Latched	-	-	Pulsed	Setting for pulsed/latched mode for output 6
tPulse6	0.01 - 6000.00	s	0.01	0.10	Output6 Pulse Time
Latched7	Pulsed Latched	-	-	Pulsed	Setting for pulsed/latched mode for output 7
tPulse7	0.01 - 6000.00	s	0.01	0.10	Output7 Pulse Time
Latched8	Pulsed Latched	-	-	Pulsed	Setting for pulsed/latched mode for output 8
tPulse8	0.01 - 6000.00	s	0.01	0.10	Output8 pulse time

3.11.6 AutomationBits, command function for DNP3.0 AUTOBITS

Function description	IEC 61850 identification	IEC 60617 identification	ANSI/IEEE C37.2 device number
AutomationBits, command function for DNP3	AUTOBITS	-	-

3.11.6.1 Application

Automation bits, command function for DNP3 (AUTOBITS) is used within PCM600 in order to get into the configuration the commands coming through the DNP3.0 protocol.The AUTOBITS function plays the same role as functions GOOSEBINRCV (for IEC 61850) and MULTICMDRCV (for LON).AUTOBITS function block have 32 individual outputs which each can be mapped as a Binary Output point in DNP3. The output is operated by a "Object 12" in DNP3. This object contains parameters for control-code, count, on-time and off-time. To operate an AUTOBITS output point, send a control-code of latch-On, latch-Off, pulse-On, pulse-Off, Trip or Close. The remaining parameters are regarded as appropriate. For example, pulse-On, on-time=100, off-time=300, count=5 would give 5 positive 100 ms pulses, 300 ms apart.

For description of the DNP3 protocol implementation, refer to the Communication manual.

3.11.6.2 Setting guidelines

AUTOBITS function block has one setting, (*Operation*: *Enabled*/*Disabled*) enabling or disabling the function. These names will be seen in the DNP3 communication management tool in PCM600.

3.11.6.3 Setting parameters

Table 63: DNPGEN Non group settings (basic)

Name	Values (Range)	Unit	Step	Default	Description
Operation	Disabled Enabled	-	-	Disabled	Disable/Enable Operation

Table 64: CHSERRS485 Non group settings (basic)

Name	Values (Range)	Unit	Step	Default	Description
Operation	Disabled Serial-Mode	-	-	Disabled	Operation mode
BaudRate	300 Bd 600 Bd 1200 Bd 2400 Bd 4800 Bd 9600 Bd 19200 Bd	-	-	9600 Bd	Baud-rate for serial port
WireMode	Four-wire Two-wire	-	-	Two-wire	RS485 wire mode

Table 65: CHSERRS485 Non group settings (advanced)

Name	Values (Range)	Unit	Step	Default	Description
DLinkConfirm	Never Sometimes Always	-	-	Never	Data-link confirm
tDLinkTimeout	0.000 - 60.000	s	0.001	2.000	Data-link confirm timeout in s
DLinkRetries	0 - 255	-	1	3	Data-link maximum retries
tRxToTxMinDel	0.000 - 60.000	s	0.001	0.000	Rx to Tx minimum delay in s
ApLayMaxRxSize	20 - 2048	-	1	2048	Application layer maximum Rx fragment size
ApLayMaxTxSize	20 - 2048	-	1	2048	Application layer maximum Tx fragment size
StopBits	1 - 2	-	1	1	Stop bits
Parity	No Even Odd	-	-	Even	Parity
tRTSWarmUp	0.000 - 60.000	s	0.001	0.000	RTS warm-up in s
tRTSWarmDown	0.000 - 60.000	s	0.001	0.000	RTS warm-down in s
tBackOffDelay	0.000 - 60.000	s	0.001	0.050	RS485 back-off delay in s
tMaxRndDelBkOf	0.000 - 60.000	s	0.001	0.100	RS485 maximum back-off random delay in s

Table 66: CH2TCP Non group settings (basic)

Name	Values (Range)	Unit	Step	Default	Description
Operation	Disabled TCP/IP UDP-Only	-	-	Disabled	Operation mode
TCPIPLisPort	1 - 65535	-	1	20000	TCP/IP listen port
UDPPortAccData	1 - 65535	-	1	20000	UDP port to accept UDP datagrams from master
UDPPortInitNUL	1 - 65535	-	1	20000	UDP port for initial NULL response
UDPPortCliMast	0 - 65535	-	1	0	UDP port to remote client/master

Table 67: CH2TCP Non group settings (advanced)

Name	Values (Range)	Unit	Step	Default	Description
ApLayMaxRxSize	20 - 2048	-	1	2048	Application layer maximum Rx fragment size
ApLayMaxTxSize	20 - 2048	-	1	2048	Application layer maximum Tx fragment size

Table 68: CH3TCP Non group settings (basic)

Name	Values (Range)	Unit	Step	Default	Description
Operation	Disabled TCP/IP UDP-Only	-	-	Disabled	Operation mode
TCPIPLisPort	1 - 65535	-	1	20000	TCP/IP listen port
UDPPortAccData	1 - 65535	-	1	20000	UDP port to accept UDP datagrams from master
UDPPortInitNUL	1 - 65535	-	1	20000	UDP port for initial NULL response
UDPPortCliMast	0 - 65535	-	1	0	UDP port to remote client/master

Table 69: CH3TCP Non group settings (advanced)

Name	Values (Range)	Unit	Step	Default	Description
ApLayMaxRxSize	20 - 2048	-	1	2048	Application layer maximum Rx fragment size
ApLayMaxTxSize	20 - 2048	-	1	2048	Application layer maximum Tx fragment size

Table 70: CH4TCP Non group settings (basic)

Name	Values (Range)	Unit	Step	Default	Description
Operation	Disabled TCP/IP UDP-Only	-	-	Disabled	Operation mode
TCPIPLisPort	1 - 65535	-	1	20000	TCP/IP listen port
UDPPortAccData	1 - 65535	-	1	20000	UDP port to accept UDP datagrams from master
UDPPortInitNUL	1 - 65535	-	1	20000	UDP port for initial NULL response
UDPPortCliMast	0 - 65535	-	1	0	UDP port to remote client/master

Table 71: CH4TCP Non group settings (advanced)

Name	Values (Range)	Unit	Step	Default	Description
ApLayMaxRxSize	20 - 2048	-	1	2048	Application layer maximum Rx fragment size
ApLayMaxTxSize	20 - 2048	-	1	2048	Application layer maximum Tx fragment size

Table 72: CH5TCP Non group settings (basic)

Name	Values (Range)	Unit	Step	Default	Description
Operation	Disabled TCP/IP UDP-Only	-	-	Disabled	Operation mode
TCPIPLisPort	1 - 65535	-	1	20000	TCP/IP listen port
UDPPortAccData	1 - 65535	-	1	20000	UDP port to accept UDP datagrams from master
UDPPortInitNUL	1 - 65535	-	1	20000	UDP port for initial NULL response
UDPPortCliMast	0 - 65535	-	1	0	UDP port to remote client/master

Table 73: CH5TCP Non group settings (advanced)

Name	Values (Range)	Unit	Step	Default	Description
ApLayMaxRxSize	20 - 2048	-	1	2048	Application layer maximum Rx fragment size
ApLayMaxTxSize	20 - 2048	-	1	2048	Application layer maximum Tx fragment size

Table 74: MSTRS485 Non group settings (basic)

Name	Values (Range)	Unit	Step	Default	Description
Operation	Disabled Enabled	-	-	Disabled	Disable/Enable Operation
SlaveAddress	0 - 65519	-	1	1	Slave address
MasterAddres	0 - 65519	-	1	1	Master address
Obj1DefVar	1:BISingleBit 2:BIWithStatus	-	-	1:BISingleBit	Object 1, default variation
Obj2DefVar	1:BIChWithoutTime 2:BIChWithTime 3:BIChWithRelTime	-	-	3:BIChWithRelTime	Object 2, default variation
Obj4DefVar	1:DIChWithoutTime 2:DIChWithTime 3:DIChWithRelTime	-	-	3:DIChWithRelTime	Object 4, default variation
Obj10DefVar	1:BO 2:BOStatus	-	-	2:BOStatus	Object 10, default variation
Obj20DefVar	1:BinCnt32 2:BinCnt16 5:BinCnt32WoutF 6:BinCnt16WoutF	-	-	5:BinCnt32WoutF	Object 20, default variation

Table continues on next page

Name	Values (Range)	Unit	Step	Default	Description
Obj22DefVar	1:BinCnt32EvWoutT 2:BinCnt16EvWoutT 5:BinCnt32EvWithT 6:BinCnt16EvWithT	-	-	1:BinCnt32EvWoutT	Object 22, default variation
Obj30DefVar	1:AI32Int 2:AI16Int 3:AI32IntWithoutF 4:AI16IntWithoutF 5:AI32FltWithF 6:AI64FltWithF	-	-	3:AI32IntWithoutF	Object 30, default variation
Obj32DefVar	1:AI32IntEvWoutF 2:AI16IntEvWoutF 3:AI32IntEvWithFT 4:AI16IntEvWithFT 5:AI32FltEvWithF 6:AI64FltEvWithF 7:AI32FltEvWithFT 8:AI64FltEvWithFT	-	-	1:AI32IntEvWoutF	Object 32, default variation

Table 75: MSTRS485 Non group settings (advanced)

Name	Values (Range)	Unit	Step	Default	Description
ValMasterAddr	No Yes	-	-	Yes	Validate source (master) address
AddrQueryEnbl	No Yes	-	-	Yes	Address query enable
tApplConfTout	0.00 - 300.00	s	0.01	10.00	Application layer confim timeout
ApplMultFrgRes	No Yes	-	-	Yes	Enable application for multiple fragment response
ConfMultFrag	No Yes	-	-	Yes	Confirm each multiple fragment
UREnable	No Yes	-	-	Yes	Unsolicited response enabled
URSendOnline	No Yes	-	-	No	Unsolicited response sends when on-line
UREvClassMask	Disabled Class 1 Class 2 Class 1 and 2 Class 3 Class 1 and 3 Class 2 and 3 Class 1, 2 and 3	-	-	Disabled	Unsolicited response, event class mask
UROfflineRetry	0 - 10	-	1	5	Unsolicited response retries before off-line retry mode

Table continues on next page

Name	Values (Range)	Unit	Step	Default	Description
tURRetryDelay	0.00 - 60.00	s	0.01	5.00	Unsolicited response retry delay in s
tUROffIRtryDel	0.00 - 60.00	s	0.01	30.00	Unsolicited response off-line retry delay in s
UREvCntThold1	1 - 100	-	1	5	Unsolicited response class 1 event count report treshold
tUREvBufTout1	0.00 - 60.00	s	0.01	5.00	Unsolicited response class 1 event buffer timeout
UREvCntThold2	1 - 100	-	1	5	Unsolicited response class 2 event count report treshold
tUREvBufTout2	0.00 - 60.00	s	0.01	5.00	Unsolicited response class 2 event buffer timeout
UREvCntThold3	1 - 100	-	1	5	Unsolicited response class 3 event count report treshold
tUREvBufTout3	0.00 - 60.00	s	0.01	5.00	Unsolicited response class 3 event buffer timeout
DelOldBufFull	No Yes	-	-	No	Delete oldest event when buffer is full
tSynchTimeout	30 - 3600	s	1	1800	Time synch timeout before error status is generated
TSyncReqAfTout	No Yes	-	-	No	Time synchronization request after timeout
DNPToSetTime	No Yes	-	-	Yes	Allow DNP to set time in IED
Averag3TimeReq	No Yes	-	-	No	Use average of 3 time requests
PairedPoint	No Yes	-	-	Yes	Enable paired point
tSelectTimeout	1.0 - 60.0	s	0.1	30.0	Select timeout

Table 76: MST1TCP Non group settings (basic)

Name	Values (Range)	Unit	Step	Default	Description
Operation	Disabled Enabled	-	-	Disabled	Operation Disable / Enable
SlaveAddress	0 - 65519	-	1	1	Slave address
MasterAddres	0 - 65519	-	1	1	Master address
ValMasterAddr	No Yes	-	-	Yes	Validate source (master) address
MasterIP-Addr	0 - 18	IP Address	1	0.0.0.0	Master IP-address
MasterIPNetMsk	0 - 18	IP Address	1	255.255.255.255	Master IP net mask
Obj1DefVar	1:BISingleBit 2:BIWithStatus	-	-	1:BISingleBit	Object 1, default variation

Table continues on next page

Name	Values (Range)	Unit	Step	Default	Description
Obj2DefVar	1:BIChWithoutTime 2:BIChWithTime 3:BIChWithRelTime	-	-	3:BIChWithRelTime	Object 2, default variation
Obj3DefVar	1:DIWithoutFlag 2:DIWithFlag	-	-	1:DIWithoutFlag	Object 3, default variation
Obj4DefVar	1:DIChWithoutTime 2:DIChWithTime 3:DIChWithRelTime	-	-	3:DIChWithRelTime	Object 4, default variation
Obj10DefVar	1:BO 2:BOStatus	-	-	2:BOStatus	Object 10, default variation
Obj20DefVar	1:BinCnt32 2:BinCnt16 5:BinCnt32WoutF 6:BinCnt16WoutF	-	-	5:BinCnt32WoutF	Object 20, default variation
Obj22DefVar	1:BinCnt32EvWoutT 2:BinCnt16EvWoutT 5:BinCnt32EvWithT 6:BinCnt16EvWithT	-	-	1:BinCnt32EvWoutT	Object 22, default variation
Obj30DefVar	1:AI32Int 2:AI16Int 3:AI32IntWithoutF 4:AI16IntWithoutF 5:AI32FltWithF 6:AI64FltWithF	-	-	3:AI32IntWithoutF	Object 30, default variation
Obj32DefVar	1:AI32IntEvWoutF 2:AI16IntEvWoutF 3:AI32IntEvWithFT 4:AI16IntEvWithFT 5:AI32FltEvWithF 6:AI64FltEvWithF 7:AI32FltEvWithFT 8:AI64FltEvWithFT	-	-	1:AI32IntEvWoutF	Object 32, default variation

Table 77: MST1TCP Non group settings (advanced)

Name	Values (Range)	Unit	Step	Default	Description
AddrQueryEnbl	No Yes	-	-	Yes	Address query enable
tApplConfTout	0.00 - 300.00	s	0.01	10.00	Application layer confim timeout
ApplMultFrgRes	No Yes	-	-	Yes	Enable application for multiple fragment response

Table continues on next page

Name	Values (Range)	Unit	Step	Default	Description
ConfMultFrag	No Yes	-	-	Yes	Confirm each multiple fragment
UREnable	No Yes	-	-	Yes	Unsolicited response enabled
UREvClassMask	Disabled Class 1 Class 2 Class 1 and 2 Class 3 Class 1 and 3 Class 2 and 3 Class 1, 2 and 3	-	-	Disabled	Unsolicited response, event class mask
UROfflineRetry	0 - 10	-	1	5	Unsolicited response retries before off-line retry mode
tURRetryDelay	0.00 - 60.00	s	0.01	5.00	Unsolicited response retry delay in s
tUROfflRtryDel	0.00 - 60.00	s	0.01	30.00	Unsolicited response off-line retry delay in s
UREvCntThold1	1 - 100	-	1	5	Unsolicited response class 1 event count report treshold
tUREvBufTout1	0.00 - 60.00	s	0.01	5.00	Unsolicited response class 1 event buffer timeout
UREvCntThold2	1 - 100	-	1	5	Unsolicited response class 2 event count report treshold
tUREvBufTout2	0.00 - 60.00	s	0.01	5.00	Unsolicited response class 2 event buffer timeout
UREvCntThold3	1 - 100	-	1	5	Unsolicited response class 3 event count report treshold
tUREvBufTout3	0.00 - 60.00	s	0.01	5.00	Unsolicited response class 3 event buffer timeout
DelOldBufFull	No Yes	-	-	No	Delete oldest event when buffer is full
ExtTimeFormat	LocalTime UTC	-	-	UTC	External time format
DNPToSetTime	No Yes	-	-	No	Allow DNP to set time in IED
tSynchTimeout	30 - 3600	s	1	1800	Time synch timeout before error status is generated
TSyncReqAfTout	No Yes	-	-	No	Time synchronization request after timeout
Averag3TimeReq	No Yes	-	-	No	Use average of 3 time requests
PairedPoint	No Yes	-	-	Yes	Enable paired point
tSelectTimeout	1.0 - 60.0	s	0.1	30.0	Select timeout
tBrokenConTout	0 - 3600	s	1	0	Broken connection timeout
tKeepAliveT	0 - 3600	s	1	10	Keep-Alive timer

Table 78: MST2TCP Non group settings (basic)

Name	Values (Range)	Unit	Step	Default	Description
Operation	Disabled Enabled	-	-	Disabled	Disable/Enable Operation
SlaveAddress	0 - 65519	-	1	1	Slave address
MasterAddres	0 - 65519	-	1	1	Master address
ValMasterAddr	No Yes	-	-	Yes	Validate source (master) address
MasterIP-Addr	0 - 18	IP Address	1	0.0.0.0	Master IP-address
MasterIPNetMsk	0 - 18	IP Address	1	255.255.255.255	Master IP net mask
Obj1DefVar	1:BISingleBit 2:BIWithStatus	-	-	1:BISingleBit	Object 1, default variation
Obj2DefVar	1:BIChWithoutTime 2:BIChWithTime 3:BIChWithRelTime	-	-	3:BIChWithRelTime	Object 2, default variation
Obj3DefVar	1:DIWithoutFlag 2:DIWithFlag	-	-	1:DIWithoutFlag	Object 3, default variation
Obj4DefVar	1:DIChWithoutTime 2:DIChWithTime 3:DIChWithRelTime	-	-	3:DIChWithRelTime	Object 4, default variation
Obj10DefVar	1:BO 2:BOStatus	-	-	2:BOStatus	Object 10, default variation
Obj20DefVar	1:BinCnt32 2:BinCnt16 5:BinCnt32WoutF 6:BinCnt16WoutF	-	-	5:BinCnt32WoutF	Object 20, default variation

Table continues on next page

Name	Values (Range)	Unit	Step	Default	Description
Obj22DefVar	1:BinCnt32EvWoutT 2:BinCnt16EvWoutT 5:BinCnt32EvWithT 6:BinCnt16EvWithT	-	-	1:BinCnt32EvWoutT	Object 22, default variation
Obj30DefVar	1:AI32Int 2:AI16Int 3:AI32IntWithoutF 4:AI16IntWithoutF 5:AI32FltWithF 6:AI64FltWithF	-	-	3:AI32IntWithoutF	Object 30, default variation
Obj32DefVar	1:AI32IntEvWoutF 2:AI16IntEvWoutF 3:AI32IntEvWithFT 4:AI16IntEvWithFT 5:AI32FltEvWithF 6:AI64FltEvWithF 7:AI32FltEvWithFT 8:AI64FltEvWithFT	-	-	1:AI32IntEvWoutF	Object 32, default variation

Table 79: MST2TCP Non group settings (advanced)

Name	Values (Range)	Unit	Step	Default	Description
AddrQueryEnbl	No Yes	-	-	Yes	Address query enable
tApplConfTout	0.00 - 300.00	s	0.01	10.00	Application layer confim timeout
ApplMultFrgRes	No Yes	-	-	Yes	Enable application for multiple fragment response
ConfMultFrag	No Yes	-	-	Yes	Confirm each multiple fragment
UREnable	No Yes	-	-	Yes	Unsolicited response enabled
UREvClassMask	Disabled Class 1 Class 2 Class 1 and 2 Class 3 Class 1 and 3 Class 2 and 3 Class 1, 2 and 3	-	-	Disabled	Unsolicited response, event class mask
UROfflineRetry	0 - 10	-	1	5	Unsolicited response retries before off-line retry mode
tURRetryDelay	0.00 - 60.00	s	0.01	5.00	Unsolicited response retry delay in s
tUROffIRtryDel	0.00 - 60.00	s	0.01	30.00	Unsolicited response off-line retry delay in s
UREvCntThold1	1 - 100	-	1	5	Unsolicited response class 1 event count report treshold

Table continues on next page

Name	Values (Range)	Unit	Step	Default	Description
tUREvBufTout1	0.00 - 60.00	s	0.01	5.00	Unsolicited response class 1 event buffer timeout
UREvCntThold2	1 - 100	-	1	5	Unsolicited response class 2 event count report treshold
tUREvBufTout2	0.00 - 60.00	s	0.01	5.00	Unsolicited response class 2 event buffer timeout
UREvCntThold3	1 - 100	-	1	5	Unsolicited response class 3 event count report treshold
tUREvBufTout3	0.00 - 60.00	s	0.01	5.00	Unsolicited response class 3 event buffer timeout
DelOldBufFull	No Yes	-	-	No	Delete oldest event when buffer is full
ExtTimeFormat	LocalTime UTC	-	-	UTC	External time format
DNPToSetTime	No Yes	-	-	No	Allow DNP to set time in IED
tSynchTimeout	30 - 3600	s	1	1800	Time synch timeout before error status is generated
TSyncReqAfTout	No Yes	-	-	No	Time synchronization request after timeout
Averag3TimeReq	No Yes	-	-	No	Use average of 3 time requests
PairedPoint	No Yes	-	-	Yes	Enable paired point
tSelectTimeout	1.0 - 60.0	s	0.1	30.0	Select timeout
tBrokenConTout	0 - 3600	s	1	0	Broken connection timeout
tKeepAliveT	0 - 3600	s	1	10	Keep-Alive timer

Table 80: MST3TCP Non group settings (basic)

Name	Values (Range)	Unit	Step	Default	Description
Operation	Disabled Enabled	-	-	Disabled	Disable/Enable Operation
SlaveAddress	0 - 65519	-	1	1	Slave address
MasterAddres	0 - 65519	-	1	1	Master address
ValMasterAddr	No Yes	-	-	Yes	Validate source (master) address
MasterIP-Addr	0 - 18	IP Address	1	0.0.0.0	Master IP-address
MasterIPNetMsk	0 - 18	IP Address	1	255.255.255.255	Master IP net mask
Obj1DefVar	1:BISingleBit 2:BIWithStatus	-	-	1:BISingleBit	Object 1, default variation
Table continues on next page					

Name	Values (Range)	Unit	Step	Default	Description
Obj2DefVar	1:BIChWithoutTime 2:BIChWithTime 3:BIChWithRelTime	-	-	3:BIChWithRelTime	Object 2, default variation
Obj3DefVar	1:DIWithoutFlag 2:DIWithFlag	-	-	1:DIWithoutFlag	Object 3, default variation
Obj4DefVar	1:DIChWithoutTime 2:DIChWithTime 3:DIChWithRelTime	-	-	3:DIChWithRelTime	Object 4, default variation
Obj10DefVar	1:BO 2:BOStatus	-	-	2:BOStatus	Object 10, default variation
Obj20DefVar	1:BinCnt32 2:BinCnt16 5:BinCnt32WoutF 6:BinCnt16WoutF	-	-	5:BinCnt32WoutF	Object 20, default variation
Obj22DefVar	1:BinCnt32EvWoutT 2:BinCnt16EvWoutT 5:BinCnt32EvWithT 6:BinCnt16EvWithT	-	-	1:BinCnt32EvWoutT	Object 22, default variation
Obj30DefVar	1:AI32Int 2:AI16Int 3:AI32IntWithoutF 4:AI16IntWithoutF 5:AI32FltWithF 6:AI64FltWithF	-	-	3:AI32IntWithoutF	Object 30, default variation
Obj32DefVar	1:AI32IntEvWoutF 2:AI16IntEvWoutF 3:AI32IntEvWithFT 4:AI16IntEvWithFT 5:AI32FltEvWithF 6:AI64FltEvWithF 7:AI32FltEvWithFT 8:AI64FltEvWithFT	-	-	1:AI32IntEvWoutF	Object 32, default variation

Table 81: MST3TCP Non group settings (advanced)

Name	Values (Range)	Unit	Step	Default	Description
AddrQueryEnbl	No Yes	-	-	Yes	Address query enable
tApplConfTout	0.00 - 300.00	s	0.01	10.00	Application layer confim timeout
ApplMultFrgRes	No Yes	-	-	Yes	Enable application for multiple fragment response

Table continues on next page

Name	Values (Range)	Unit	Step	Default	Description
ConfMultFrag	No Yes	-	-	Yes	Confirm each multiple fragment
UREnable	No Yes	-	-	Yes	Unsolicited response enabled
UREvClassMask	Disabled Class 1 Class 2 Class 1 and 2 Class 3 Class 1 and 3 Class 2 and 3 Class 1, 2 and 3	-	-	Disabled	Unsolicited response, event class mask
UROfflineRetry	0 - 10	-	1	5	Unsolicited response retries before off-line retry mode
tURRetryDelay	0.00 - 60.00	s	0.01	5.00	Unsolicited response retry delay in s
tUROffIRtryDel	0.00 - 60.00	s	0.01	30.00	Unsolicited response off-line retry delay in s
UREvCntThold1	1 - 100	-	1	5	Unsolicited response class 1 event count report treshold
tUREvBufTout1	0.00 - 60.00	s	0.01	5.00	Unsolicited response class 1 event buffer timeout
UREvCntThold2	1 - 100	-	1	5	Unsolicited response class 2 event count report treshold
tUREvBufTout2	0.00 - 60.00	s	0.01	5.00	Unsolicited response class 2 event buffer timeout
UREvCntThold3	1 - 100	-	1	5	Unsolicited response class 3 event count report treshold
tUREvBufTout3	0.00 - 60.00	s	0.01	5.00	Unsolicited response class 3 event buffer timeout
DelOldBufFull	No Yes	-	-	No	Delete oldest event when buffer is full
ExtTimeFormat	LocalTime UTC	-	-	UTC	External time format
DNPToSetTime	No Yes	-	-	No	Allow DNP to set time in IED
tSynchTimeout	30 - 3600	s	1	1800	Time synch timeout before error status is generated
TSyncReqAfTout	No Yes	-	-	No	Time synchronization request after timeout
Averag3TimeReq	No Yes	-	-	No	Use average of 3 time requests
PairedPoint	No Yes	-	-	Yes	Enable paired point
tSelectTimeout	1.0 - 60.0	s	0.1	30.0	Select timeout
tBrokenConTout	0 - 3600	s	1	0	Broken connection timeout
tKeepAliveT	0 - 3600	s	1	10	Keep-Alive timer

Table 82: MST4TCP Non group settings (basic)

Name	Values (Range)	Unit	Step	Default	Description
Operation	Disabled Enabled	-	-	Disabled	Disable/Enable Operation
SlaveAddress	0 - 65519	-	1	1	Slave address
MasterAddres	0 - 65519	-	1	1	Master address
ValMasterAddr	No Yes	-	-	Yes	Validate source (master) address
MasterIP-Addr	0 - 18	IP Address	1	0.0.0.0	Master IP-address
MasterIPNetMsk	0 - 18	IP Address	1	255.255.255.255	Master IP net mask
Obj1DefVar	1:BISingleBit 2:BIWithStatus	-	-	1:BISingleBit	Object 1, default variation
Obj2DefVar	1:BIChWithoutTime 2:BIChWithTime 3:BIChWithRelTime	-	-	3:BIChWithRelTime	Object 2, default variation
Obj3DefVar	1:DIWithoutFlag 2:DIWithFlag	-	-	1:DIWithoutFlag	Object 3, default variation
Obj4DefVar	1:DIChWithoutTime 2:DIChWithTime 3:DIChWithRelTime	-	-	3:DIChWithRelTime	Object 4, default variation
Obj10DefVar	1:BO 2:BOStatus	-	-	2:BOStatus	Object 10, default variation
Obj20DefVar	1:BinCnt32 2:BinCnt16 5:BinCnt32WoutF 6:BinCnt16WoutF	-	-	5:BinCnt32WoutF	Object 20, default variation

Table continues on next page

Name	Values (Range)	Unit	Step	Default	Description
Obj22DefVar	1:BinCnt32EvWoutT 2:BinCnt16EvWoutT 5:BinCnt32EvWithT 6:BinCnt16EvWithT	-	-	1:BinCnt32EvWoutT	Object 22, default variation
Obj30DefVar	1:AI32Int 2:AI16Int 3:AI32IntWithoutF 4:AI16IntWithoutF 5:AI32FltWithF 6:AI64FltWithF	-	-	3:AI32IntWithoutF	Object 30, default variation
Obj32DefVar	1:AI32IntEvWoutF 2:AI16IntEvWoutF 3:AI32IntEvWithFT 4:AI16IntEvWithFT 5:AI32FltEvWithF 6:AI64FltEvWithF 7:AI32FltEvWithFT 8:AI64FltEvWithFT	-	-	1:AI32IntEvWoutF	Object 32, default variation

Table 83: MST4TCP Non group settings (advanced)

Name	Values (Range)	Unit	Step	Default	Description
AddrQueryEnbl	No Yes	-	-	Yes	Address query enable
tApplConfTout	0.00 - 300.00	s	0.01	10.00	Application layer confim timeout
ApplMultFrgRes	No Yes	-	-	Yes	Enable application for multiple fragment response
ConfMultFrag	No Yes	-	-	Yes	Confirm each multiple fragment
UREnable	No Yes	-	-	Yes	Unsolicited response enabled
UREvClassMask	Disabled Class 1 Class 2 Class 1 and 2 Class 3 Class 1 and 3 Class 2 and 3 Class 1, 2 and 3	-	-	Disabled	Unsolicited response, event class mask
UROfflineRetry	0 - 10	-	1	5	Unsolicited response retries before off-line retry mode
tURRetryDelay	0.00 - 60.00	s	0.01	5.00	Unsolicited response retry delay in s
tUROfflRtryDel	0.00 - 60.00	s	0.01	30.00	Unsolicited response off-line retry delay in s
UREvCntThold1	1 - 100	-	1	5	Unsolicited response class 1 event count report treshold

Table continues on next page

Name	Values (Range)	Unit	Step	Default	Description
tUREvBufTout1	0.00 - 60.00	s	0.01	5.00	Unsolicited response class 1 event buffer timeout
UREvCntThold2	1 - 100	-	1	5	Unsolicited response class 2 event count report treshold
tUREvBufTout2	0.00 - 60.00	s	0.01	5.00	Unsolicited response class 2 event buffer timeout
UREvCntThold3	1 - 100	-	1	5	Unsolicited response class 3 event count report treshold
tUREvBufTout3	0.00 - 60.00	s	0.01	5.00	Unsolicited response class 3 event buffer timeout
DelOldBufFull	No Yes	-	-	No	Delete oldest event when buffer is full
ExtTimeFormat	LocalTime UTC	-	-	UTC	External time format
DNPToSetTime	No Yes	-	-	No	Allow DNP to set time in IED
tSynchTimeout	30 - 3600	s	1	1800	Time synch timeout before error status is generated
TSyncReqAfTout	No Yes	-	-	No	Time synchronization request after timeout
Averag3TimeReq	No Yes	-	-	No	Use average of 3 time requests
PairedPoint	No Yes	-	-	Yes	Enable paired point
tSelectTimeout	1.0 - 60.0	s	0.1	30.0	Select timeout
tBrokenConTout	0 - 3600	s	1	0	Broken connection timeout
tKeepAliveT	0 - 3600	s	1	10	Keep-Alive timer

3.11.7 Single command, 16 signals SINGLECMD

Function description	IEC 61850 identification	IEC 60617 identification	ANSI/IEEE C37.2 device number
Single command, 16 signals	SINGLECMD	-	-

3.11.7.1 Application

Single command, 16 signals (SINGLECMD) is a common function and always included in the IED.

The IEDs may be provided with a function to receive commands either from a substation automation system or from the local HMI. That receiving function block has

outputs that can be used, for example, to control high voltage apparatuses in switchyards. For local control functions, the local HMI can also be used. Together with the configuration logic circuits, the user can govern pulses or steady output signals for control purposes within the IED or via binary outputs.

Figure 42 shows an application example of how the user can connect SINGLECMD via configuration logic circuit to control a high-voltage apparatus. This type of command control is normally carried out by sending a pulse to the binary outputs of the IED. Figure 42 shows a close operation. An open breaker operation is performed in a similar way but without the synchro-check condition.

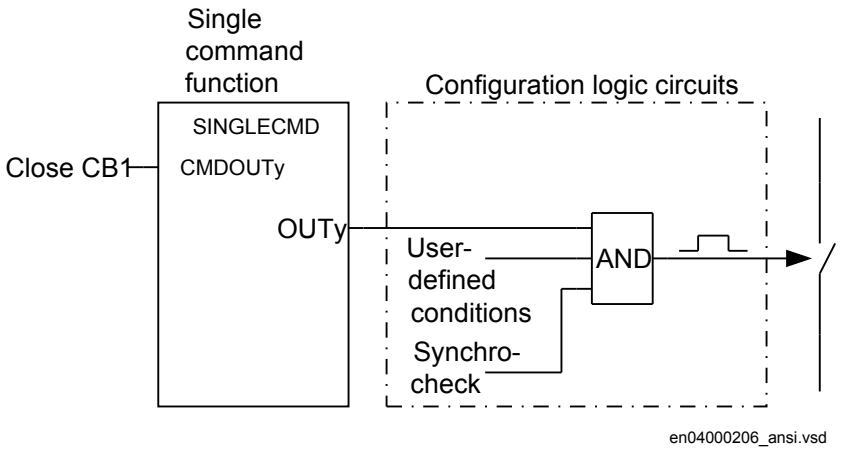

Figure 42: Application example showing a logic diagram for control of a circuit breaker via configuration logic circuits

Figure 43 and figure 44 show other ways to control functions, which require steady Enabled/Disabled signals. Here, the output is used to control built-in functions or external devices.

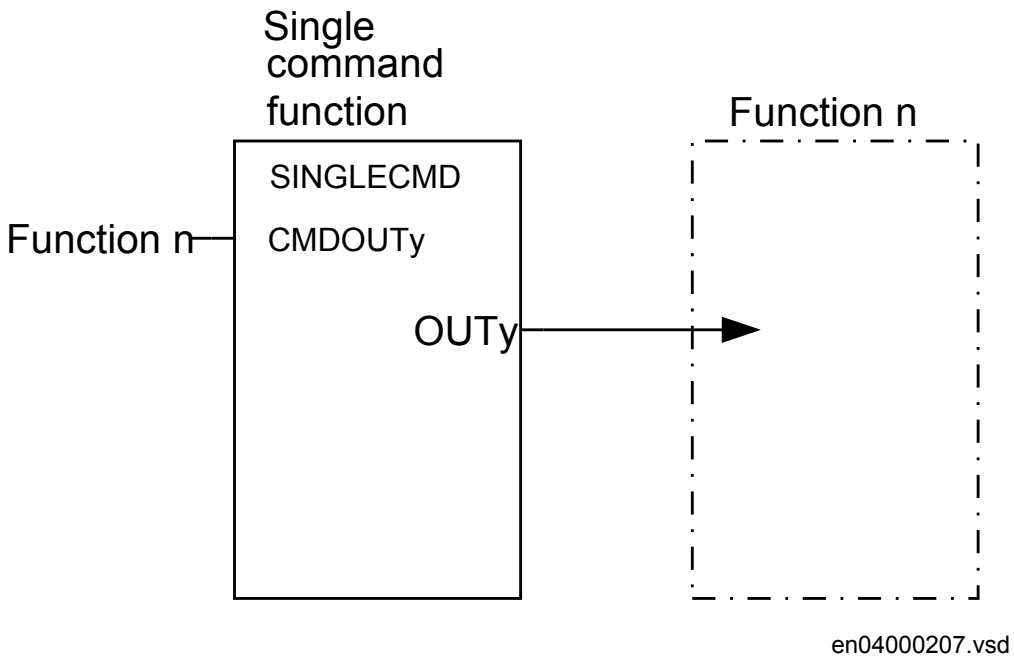

Figure 43: Application example showing a logic diagram for control of built-in functions

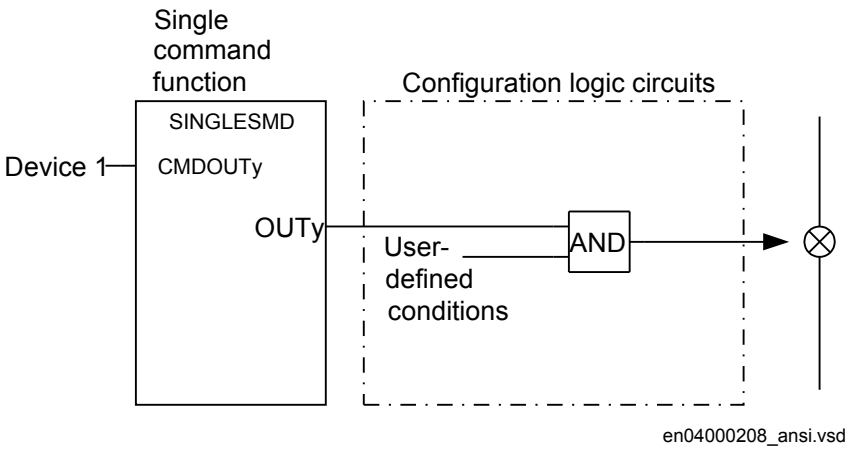

Figure 44: Application example showing a logic diagram for control of external devices via configuration logic circuits

3.11.7.2 Setting guidelines

The parameters for Single command, 16 signals (SINGLECMD) are set via the local HMI or PCM600.

Parameters to be set are MODE, common for the whole block, and CMDOUTy which includes the user defined name for each output signal. The MODE input sets the outputs to be one of the types Disabled, Steady, or Pulse.

- Disabled, sets all outputs to 0, independent of the values sent from the station level, that is, the operator station or remote-control gateway.
- Steady, sets the outputs to a steady signal 0 or 1, depending on the values sent from the station level.
- Pulse, gives a pulse with 100 ms duration, if a value sent from the station level is changed from 0 to 1. That means the configured logic connected to the command function block may not have a cycle time longer than the cycle time for the command function block.

3.11.7.3 Setting parameters

Table 84: SINGLECMD Non group settings (basic)

Name	Values (Range)	Unit	Step	Default	Description
Mode	Disabled Steady Pulsed	-	-	Disabled	Operation mode

3.12 Logic

3.12.1 Tripping logic SMPPTRC (94)

3.12.1.1 Application

All trip signals from the different protection functions shall be routed through the trip logic. In its simplest alternative the logic will only link the TRIP signal and make sure that it is long enough.

Tripping logic SMPPTRC (94) offers three different operating modes:

- Three-pole tripping for all fault types (3ph operating mode)
- Single-pole tripping for single-phase faults and three-pole tripping for multi-phase and evolving faults (1ph/3ph operating mode). The logic also issues a three-pole

tripping command when phase selection within the operating protection functions is not possible, or when external conditions request three-pole tripping.
- Two-pole tripping for two-phase faults.

The three-pole trip for all faults offers a simple solution and is often sufficient in well meshed transmission systems and in sub-transmission systems. Since most faults, especially at the highest voltage levels, are single phase-to-ground faults, single-pole tripping can be of great value. If only the faulty phase is tripped, power can still be transferred on the line during the dead time that arises before reclosing. Single-pole tripping during single-phase faults must be combined with single pole reclosing.

To meet the different double, breaker-and-a-half and other multiple circuit breaker arrangements, two identical SMPPTRC (94) function blocks may be provided within the IED.

One SMPPTRC (94) function block should be used for each breaker, if the line is connected to the substation via more than one breaker. Assume that single-pole tripping and autoreclosing is used on the line. Both breakers are then normally set up for 1/3-pole tripping and 1/3-phase autoreclosing. As an alternative, the breaker chosen as master can have single-pole tripping, while the slave breaker could have three-pole tripping and autoreclosing. In the case of a permanent fault, only one of the breakers has to be operated when the fault is energized a second time. In the event of a transient fault the slave breaker performs a three-pole reclosing onto the non-faulted line.

The same philosophy can be used for two-pole tripping and autoreclosing.

To prevent closing of a circuit breaker after a trip the function can block the closing.

The two instances of the SMPPTRC (94) function are identical except, for the name of the function block (SMPPTRC1 and SMPPTRC2). References will therefore only be made to SMPPTRC1 in the following description, but they also apply to SMPPTRC2.

Three-pole tripping

A simple application with three-pole tripping from the logic block utilizes part of the function block. Connect the inputs from the protection function blocks to the input TRINP_3P. If necessary (normally the case) use a logic OR block to combine the different function outputs to this input. Connect the output TRIP to the digital Output/s on the IO board.

This signal can also be used for other purposes internally in the IED. An example could be the starting of Breaker failure protection. The three outputs TR_A, TR_B, TR_C will always be activated at every trip and can be utilized on individual trip outputs if single-pole operating devices are available on the circuit breaker even when a three-pole tripping scheme is selected.

Set the function block to *Program = 3Ph* and set the required length of the trip pulse to for example, *tTripMin = 150ms*.

For special applications such as Lock-out refer to the separate section below. The typical connection is shown below in figure 45. Signals that are not used are dimmed.

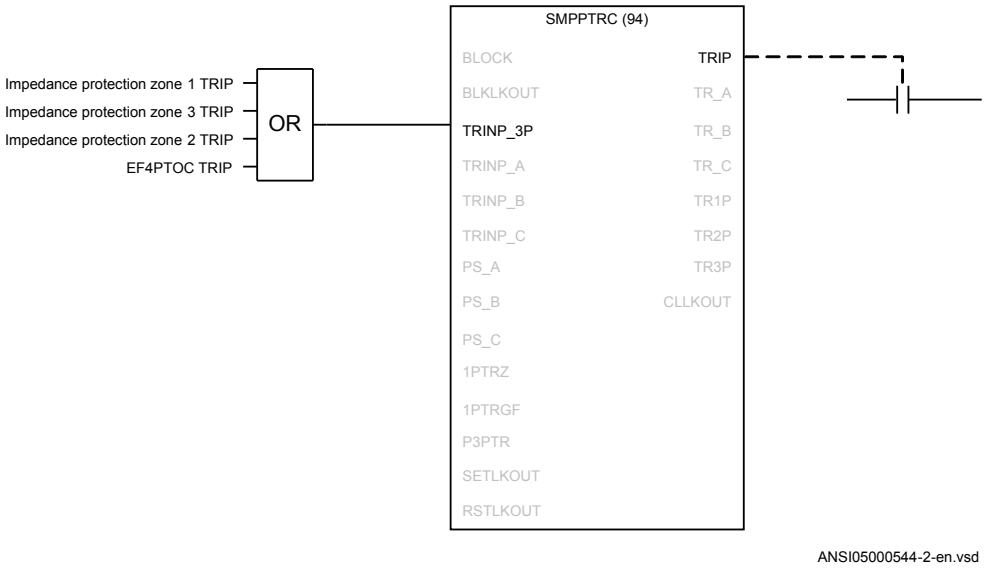

Figure 45: Tripping logic SMPPTRC (94) is used for a simple three-pole tripping application

Single- and/or three-pole tripping

The single-/three-pole tripping will give single-pole tripping for single-phase faults and three-pole tripping for multi-phase fault. The operating mode is always used together with a single-phase autoreclosing scheme.

The single-pole tripping can include different options and the use of the different inputs in the function block.

The inputs 1PTRZ and 1PTREF are used for single-pole tripping for distance protection and directional ground fault protection as required.

The inputs are combined with the phase selection logic and the pickup signals from the phase selector must be connected to the inputs PS_A, PS_B and PS_C to achieve the tripping on the respective single-pole trip outputs TR_A, TR_B and TR_C. The Output TRIP is a general trip and activated independent of which phase is involved. Depending on which phases are involved the outputs TR1P, TR2P and TR3P will be activated as well.

When single-pole tripping schemes are used a single-phase autoreclosing attempt is expected to follow. For cases where the autoreclosing is not in service or will not follow for some reason, the input Prepare Three-pole Trip P3PTR must be activated. This is normally connected to the respective output on the Synchronism check, energizing check, and synchronizing function SESRSYN (25) but can also be connected to other signals, for example an external logic signal. If two breakers are involved, one TR block instance and one SESRSYN (25) instance is used for each breaker. This will ensure correct operation and behavior of each breaker.

The output Trip 3 Phase TR3P must be connected to the respective input in SESRSYN (25) to switch SESRSYN (25) to three-phase reclosing. If this signal is not activated SESRSYN (25) will use single-phase reclosing dead time.

Note also that if a second line protection is utilizing the same SESRSYN (25) the three-pole trip signal must be generated, for example by using the three-trip relays contacts in series and connecting them in parallel to the TR3P output from the trip block.

The trip logic also has inputs TRIN_A, TRIN_B and TRIN_C where phase-selected trip signals can be connected. Examples can be individual phase inter-trips from remote end or internal/external phase selected trip signals, which are routed through the IED to achieve, for example SESRSYN (25), Breaker failure, and so on. Other back-up functions are connected to the input TRIN as described above. A typical connection for a single-pole tripping scheme is shown in figure 46.

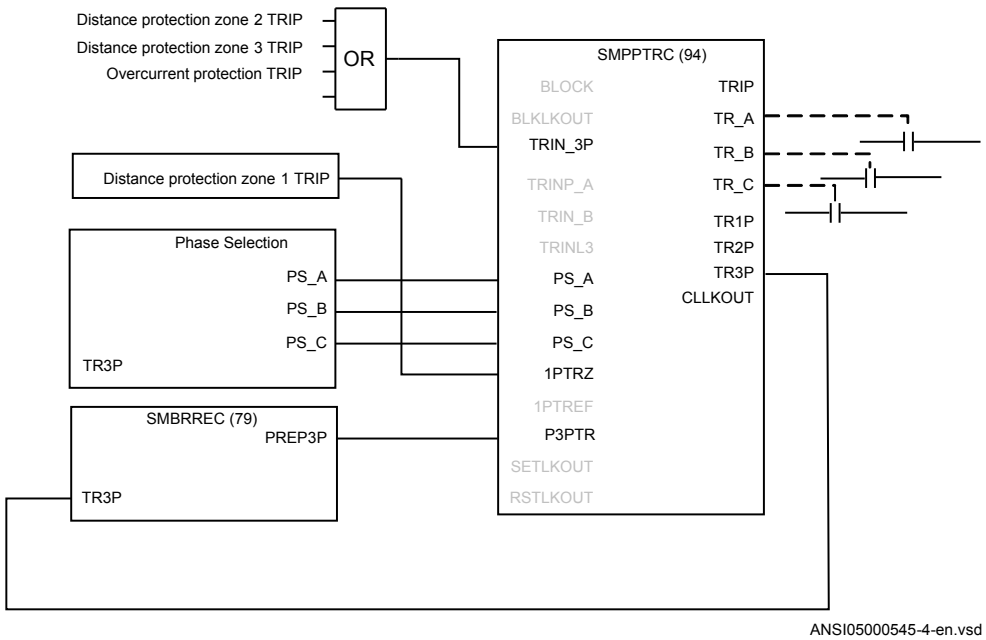

Figure 46: The trip logic function SMPPTRC (94) used for single-pole tripping application

Single-, two- or three-pole tripping

The single-/two-/three-pole tripping mode provides single-pole tripping for single-phase faults, two-pole tripping for two-phase faults and three-pole tripping for multi-phase faults. The operating mode is always used together with an autoreclosing scheme with setting *Program = 1/2/3Ph* or *Program = 1/3Ph* attempt.

The functionality is very similar to the single-phase scheme described above. However SESRSYN (25) must in addition to the connections for single phase above be informed that the trip is two phase by connecting the trip logic output TR2P to the respective input in SESRSYN (25).

Lock-out

This function block is provided with possibilities to initiate lock-out. The lock-out can be set to only activate the block closing output CLLKOUT or initiate the block closing output and also maintain the trip signal (latched trip).

The lock-out can then be manually reset after checking the primary fault by activating the input reset Lock-Out RSTLKOUT.

If external conditions are required to initiate Lock-out but not initiate trip this can be achieved by activating input SETLKOUT. The setting *AutoLock = Disabled* means that the internal trip will not activate lock-out so only initiation of the input SETLKOUT

will result in lock-out. This is normally the case for overhead line protection where most faults are transient. Unsuccessful autoreclose and back-up zone tripping can in such cases be connected to initiate Lock-out by activating the input SETLKOUT.

Blocking of the function block

The function block can be blocked in two different ways. Its use is dependent on the application. Blocking can be initiated internally by logic, or by the operator using a communication channel. Total blockage of the trip function is done by activating the input BLOCK and can be used to block the output of the trip logic in the event of internal failures. Blockage of lock-out output by activating input BLKLKOUT is used for operator control of the lock-out function.

3.12.1.2 Setting guidelines

The parameters for Tripping logic SMPPTRC (94) are set via the local HMI or PCM600.

The following trip parameters can be set to regulate tripping.

Operation: Sets the mode of operation. *Disabled* switches the tripping off. The normal selection is *Enabled*.

Program: Sets the required tripping scheme. Normally *3Ph* or *1/2Ph* are used.

TripLockout: Sets the scheme for lock-out. *Disabled* only activates the lock-out output. *Enabled* activates the lock-out output and latches the output TRIP. The normal selection is *Disabled*.

AutoLock: Sets the scheme for lock-out. *Disabled* only activates lock-out through the input SETLKOUT. *Enabled* additonally allows activation through the trip function itself. The normal selection is *Disabled*.

tTripMin: Sets the required minimum duration of the trip pulse. It should be set to ensure that the breaker is tripped correctly. Normal setting is *0.150s*.

tWaitForPHS: Sets a duration after any of the inputs 1PTRZ or 1PTREF has been activated during which a phase selection must occur to get a single phase trip. If no phase selection has been achieved a three-phase trip will be issued after the time has elapsed.

3.12.1.3 Setting parameters

Table 85: SMPPTRC (94) Group settings (basic)

Name	Values (Range)	Unit	Step	Default	Description
Operation	Disabled Enabled	-	-	Enabled	Disable/Enable Operation
Program	3 phase 1p/3p 1p/2p/3p	-	-	1p/3p	Three pole; single or three pole; single, two or three pole trip
tTripMin	0.000 - 60.000	s	0.001	0.150	Minimum duration of trip output signal
tWaitForPHS	0.020 - 0.500	s	0.001	0.050	Secures 3-pole trip when phase selection failed

Table 86: SMPPTRC (94) Group settings (advanced)

Name	Values (Range)	Unit	Step	Default	Description
TripLockout	Disabled Enabled	-	-	Disabled	If TripLockout is set to On, it will activate output (CLLKOUT) and trip latch. If set to Off it will activate only CLLKOUT
AutoLock	Disabled Enabled	-	-	Disabled	If AutoLock is set to On i will activate lockout from input (SETLKOUT) and trip, If set to Off it will activate only from SETLKOUT

3.12.2 Trip matrix logic TMAGGIO

Function description	IEC 61850 identification	IEC 60617 identification	ANSI/IEEE C37.2 device number
Trip matrix logic	TMAGGIO	-	-

3.12.2.1 Setting parameters

Table 87: TMAGGIO Group settings (basic)

Name	Values (Range)	Unit	Step	Default	Description
Operation	Disabled Enabled	-	-	Enabled	Operation Disable / Enable
PulseTime	0.050 - 60.000	s	0.001	0.150	Output pulse time
OnDelay	0.000 - 60.000	s	0.001	0.000	Output on delay time
OffDelay	0.000 - 60.000	s	0.001	0.000	Output off delay time

Table continues on next page

Name	Values (Range)	Unit	Step	Default	Description
ModeOutput1	Steady Pulsed	-	-	Steady	Mode for output ,1 steady or pulsed
ModeOutput2	Steady Pulsed	-	-	Steady	Mode for output 2, steady or pulsed
ModeOutput3	Steady Pulsed	-	-	Steady	Mode for output 3, steady or pulsed

3.12.3 Configurable logic blocks

3.12.3.1 Application

A set of standard logic blocks, like AND, OR etc, and timers are available for adapting the IED configuration to the specific application needs.

There are no settings for AND gates, OR gates, inverters or XOR gates.

For normal On/Off delay and pulse timers the time delays and pulse lengths are set from the local HMI or via the PST tool.

Both timers in the same logic block (the one delayed on pick-up and the one delayed on drop-out) always have a common setting value.

For controllable gates, settable timers and SR flip-flops with memory, the setting parameters are accessible via the local HMI or via the PST tool.

Configuration

Logic is configured using the ACT configuration tool in PCM600.

Execution of functions as defined by the configurable logic blocks runs according to a fixed sequence with different cycle times.

For each cycle time, the function block is given an serial execution number. This is shown when using the ACT configuration tool with the designation of the function block and the cycle time, see example below.

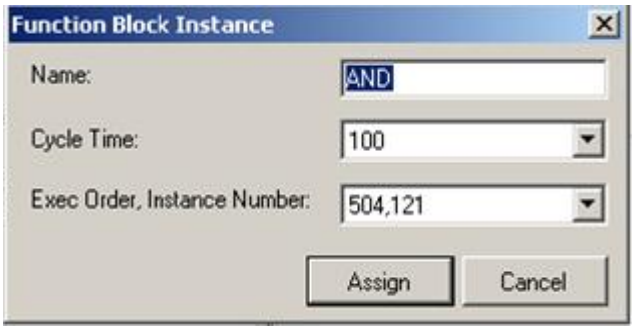

Figure 47: Example designation, serial execution number and cycle time for logic function

The execution of different function blocks within the same cycle is determined by the order of their serial execution numbers. Always remember this when connecting two or more logical function blocks in series.

Always be careful when connecting function blocks with a fast cycle time to function blocks with a slow cycle time.
Remember to design the logic circuits carefully and always check the execution sequence for different functions. In other cases, additional time delays must be introduced into the logic schemes to prevent errors, for example, race between functions.

3.12.3.2 Setting parameters

Table 88: TIMER Non group settings (basic)

Name	Values (Range)	Unit	Step	Default	Description
T	0.000 - 90000.000	s	0.001	0.000	Time delay of function

Table 89: PULSETIMER Non group settings (basic)

Name	Values (Range)	Unit	Step	Default	Description
T	0.000 - 90000.000	s	0.001	0.010	Time delay of function

Table 90: SRMEMORY Group settings (basic)

Name	Values (Range)	Unit	Step	Default	Description
Memory	Disabled Enabled	-	-	Enabled	Operating mode of the memory function

Table 91: RSMEMORY Group settings (basic)

Name	Values (Range)	Unit	Step	Default	Description
Memory	Disabled Enabled	-	-	Enabled	Operating mode of the memory function

Table 92: GATE Group settings (basic)

Name	Values (Range)	Unit	Step	Default	Description
Operation	Disabled Enabled	-	-	Disabled	Operation Disabled/Enabled

Table 93: TIMERSET Group settings (basic)

Name	Values (Range)	Unit	Step	Default	Description
Operation	Disabled Enabled	-	-	Disabled	Operation Disabled/Enabled
t	0.000 - 90000.000	s	0.001	0.000	Delay for settable timer n

3.12.4 Fixed signal function block FXDSIGN

Function description	IEC 61850 identification	IEC 60617 identification	ANSI/IEEE C37.2 device number
Fixed signals	FXDSIGN	-	-

3.12.4.1 Application

The Fixed signals function (FXDSIGN) generates a number of pre-set (fixed) signals that can be used in the configuration of an IED, either for forcing the unused inputs in other function blocks to a certain level/value, or for creating certain logic.

Example for use of GRP_OFF signal in FXDSIGN

The Restricted earth fault function REFPDIF (87N) can be used both for auto-transformers and normal transformers.

When used for auto-transformers, information from both windings parts, together with the neutral point current, needs to be available to the function. This means that three inputs are needed.

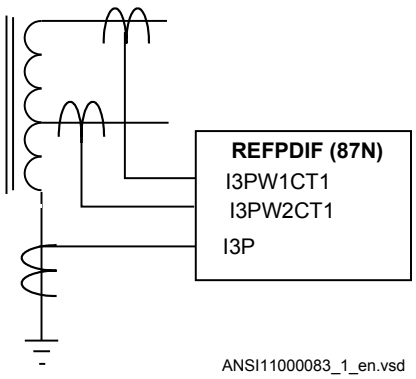

Figure 48: REFPDIF (87N) function inputs for autotransformer application

For normal transformers only one winding and the neutral point is available. This means that only two inputs are used. Since all group connections are mandatory to be connected, the third input needs to be connected to something, which is the GRP_OFF signal in FXDSIGN function block.

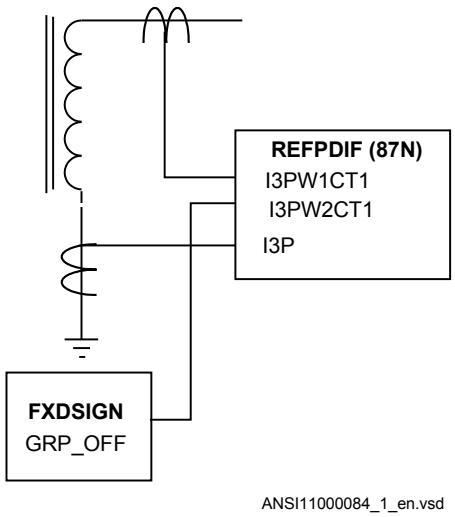

Figure 49: REFPDIF (87N) function inputs for normal transformer application

3.12.4.2 Setting parameters

The function does not have any parameters available in Local HMI or Protection and Control IED Manager (PCM 600)

3.12.5 Boolean 16 to Integer conversion B16I

Function description	IEC 61850 identification	IEC 60617 identification	ANSI/IEEE C37.2 device number
Boolean 16 to integer conversion	B16I	-	-

3.12.5.1 Application

Boolean 16 to integer conversion function B16I is used to transform a set of 16 binary (logical) signals into an integer. It can be used – for example, to connect logical output signals from a function (like distance protection) to integer inputs from another function (like line differential protection). B16I does not have a logical node mapping.

3.12.5.2 Setting guidelines

The function does not have any parameters available in Local HMI or Protection and Control IED Manager (PCM600).

3.12.6 Boolean 16 to Integer conversion with logic node representation B16IFCVI

Function description	IEC 61850 identification	IEC 60617 identification	ANSI/IEEE C37.2 device number
Boolean 16 to integer conversion with logic node representation	B16IFCVI	-	-

3.12.6.1 Application

Boolean 16 to integer conversion with logic node representation function B16IFCVI is used to transform a set of 16 binary (logical) signals into an integer. B16IFCVI can receive an integer from a station computer – for example, over IEC 61850–8–1. These functions are very useful when you want to generate logical commands (for selector switches or voltage controllers) by inputting an integer number. B16IFCVI has a logical node mapping in IEC 61850.

3.12.6.2 Setting guidelines

The function does not have any parameters available in the local HMI or Protection and Control IED Manager (PCM600).

3.12.7 Integer to Boolean 16 conversion IB16

Function description	IEC 61850 identification	IEC 60617 identification	ANSI/IEEE C37.2 device number
Integer to boolean 16 conversion	IB16	-	-

3.12.7.1 Application

Integer to boolean 16 conversion function (IB16) is used to transform an integer into a set of 16 binary (logical) signals. It can be used – for example, to connect integer output signals from one function to binary (logical) inputs to another function. IB16 function does not have a logical node mapping.

3.12.7.2 Setting parameters

The function does not have any parameters available in the local HMI or Protection and Control IED Manager (PCM600).

3.12.8 Integer to Boolean 16 conversion with logic node representation IB16FCVB

Function description	IEC 61850 identification	IEC 60617 identification	ANSI/IEEE C37.2 device number
Integer to boolean 16 conversion with logic node representation	IB16FCVB	-	-

3.12.8.1 Application

Integer to boolean 16 conversion with logic node representation function (IB16FCVB) is used to transform an integer into a set of 16 binary (logical) signals. IB16FCVB function can receive an integer from a station computer – for example, over IEC 61850–8–1. These functions are very useful when the user wants to generate logical commands (for selector switches or voltage controllers) by inputting an integer number. IB16FCVB function has a logical node mapping in IEC 61850.

3.12.8.2 Setting parameters

The function does not have any parameters available in the local HMI or Protection and Control IED Manager (PCM600)

3.13 Monitoring

3.13.1 Measurement

Function description	IEC 61850 identification	IEC 60617 identification	ANSI/IEEE C37.2 device number
Measurements	CVMMXN	P, Q, S, I, U, f	-
Phase current measurement	CMMXU	I	-
Phase-phase voltage measurement	VMMXU	U	-
Current sequence component measurement	CMSQI	I1, I2, I0	-
Voltage sequence measurement	VMSQI	U1, U2, U0	-
Phase-neutral voltage measurement	VNMMXU	U	-

3.13.1.1 Application

Measurement functions is used for power system measurement, supervision and reporting to the local HMI, monitoring tool within PCM600 or to station level for example, via IEC 61850. The possibility to continuously monitor measured values of active power, reactive power, currents, voltages, frequency, power factor etc. is vital for efficient production, transmission and distribution of electrical energy. It provides to the system operator fast and easy overview of the present status of the power system. Additionally, it can be used during testing and commissioning of protection and control

IEDs in order to verify proper operation and connection of instrument transformers (CTs and VTs). During normal service by periodic comparison of the measured value from the IED with other independent meters the proper operation of the IED analog measurement chain can be verified. Finally, it can be used to verify proper direction orientation for distance or directional overcurrent protection function.

The available measured values of an IED are depending on the actual hardware (TRM) and the logic configuration made in PCM600.

All measured values can be supervised with four settable limits that is, low-low limit, low limit, high limit and high-high limit. A zero clamping reduction is also supported, that is, the measured value below a settable limit is forced to zero which reduces the impact of noise in the inputs.

Dead-band supervision can be used to report measured signal value to station level when change in measured value is above set threshold limit or time integral of all changes since the last time value updating exceeds the threshold limit. Measure value can also be based on periodic reporting.

The measurement function, CVMMXN, provides the following power system quantities:

- P, Q and S: three phase active, reactive and apparent power
- PF: power factor
- V: phase-to-phase voltage magnitude
- I: phase current magnitude
- F: power system frequency

Main menu/Measurement/Monitoring/Service values/CVMMXN

The measuring functions CMMXU, VNMMXU and VMMXU provide physical quantities:

- I: phase currents (magnitude and angle) (CMMXU)
- V: voltages (phase-to-ground and phase-to-phase voltage, magnitude and angle) (VMMXU, VNMMXU)

It is possible to calibrate the measuring function above to get better then class 0.5 presentation. This is accomplished by angle and magnitude compensation at 5, 30 and 100% of rated current and at 100% of rated voltage.

The power system quantities provided, depends on the actual hardware, (TRM) and the logic configuration made in PCM600.

The measuring functions CMSQI and VMSQI provide sequence component quantities:

- I: sequence currents (positive, zero, negative sequence, magnitude and angle)
- V: sequence voltages (positive, zero and negative sequence, magnitude and angle).

The CVMMXN function calculates three-phase power quantities by using fundamental frequency phasors (DFT values) of the measured current respectively voltage signals. The measured power quantities are available either, as instantaneously calculated quantities or, averaged values over a period of time (low pass filtered) depending on the selected settings.

3.13.1.2 Zero clamping

The measuring functions, CMMXU, VMMXU, VNMMXU and CVMMXN have no interconnections regarding any setting or parameter.

Zero clampings are also entirely handled by the *ZeroDb* for each and every signal separately for each of the functions. For example, the zero clamping of *U12* is handled by *UL12ZeroDb* in VMMXU, zero clamping of I1 is handled by *IL1ZeroDb* in CMMXU ETC.

Example how CVMMXN is operating:

The following outputs can be observed on the local HMI under **Monitoring/ Servicevalues/SRV1**

S	Apparent three-phase power
P	Active three-phase power
Q	Reactive three-phase power
PF	Power factor
ILAG	I lagging U
ILEAD	I leading U
U	System mean voltage, calculated according to selected mode
I	System mean current, calculated according to selected mode
F	Frequency

The settings for this function is found under **Setting/General setting/Monitoring/ Service values/SRV1**

It can be seen that:

- When system voltage falls below *UGenZeroDB*, the shown value for S, P, Q, PF, ILAG, ILEAD, U and F on the local HMI is forced to zero
- When system current falls below *IGenZeroDB*, the shown value for S, P, Q, PF, ILAG, ILEAD, U and F on the local HMI is forced to zero
- When the value of a single signal falls below the set dead band for that specific signal, the value shown on the local HMI is forced to zero. For example, if apparent three-phase power falls below *SZeroDb* the value for S on the local HMI is forced to zero.

3.13.1.3 Setting guidelines

The available setting parameters of the measurement function CVMMXN, CMMXU, VMMXU, CMSQI, VMSQI, VNMMXU are depending on the actual hardware (TRM) and the logic configuration made in PCM600.

The parameters for the Measurement functions CVMMXN, CMMXU, VMMXU, CMSQI, VMSQI, VNMMXU are set via the local HMI or PCM600.

Operation: *Disabled*/*Enabled*. Every function instance (CVMMXN, CMMXU, VMMXU, CMSQI, VMSQI, VNMMXU) can be taken in operation (*Enabled*) or out of operation (*Disabled*).

The following general settings can be set for the **Measurement function** (CVMMXN).

PowMagFact: Magnitude factor to scale power calculations.

PowAngComp: Angle compensation for phase shift between measured I & V.

Mode: Selection of measured current and voltage. There are 9 different ways of calculating monitored three-phase values depending on the available VT inputs connected to the IED. See parameter group setting table.

k: Low pass filter coefficient for power measurement, V and I.

VGenZeroDb: Minimum level of voltage in % of VBase used as indication of zero voltage (zero point clamping). If measured value is below *VGenZeroDb* calculated S, P, Q and PF will be zero.

IGenZeroDb: Minimum level of current in % of *IBase* used as indication of zero current (zero point clamping). If measured value is below *IGenZeroDb* calculated S, P, Q and PF will be zero.

VBase: Base voltage in primary kV. This voltage is used as reference for voltage setting. It can be suitable to set this parameter to the rated primary voltage supervised object.

IBase: Base current in primary A. This current is used as reference for current setting. It can be suitable to set this parameter to the rated primary current of the supervised object.

SBase: Base setting for power values in MVA.

VMagCompY: Magnitude compensation to calibrate voltage measurements at Y% of Vn, where Y is equal to 5, 30 or 100.

IMagCompY: Magnitude compensation to calibrate current measurements at Y% of In, where Y is equal to 5, 30 or 100.

IAngCompY: Angle compensation to calibrate angle measurements at Y% of In, where Y is equal to 5, 30 or 100.

Parameters *IBase*, *Ubase* and *SBase* have been implemented as a settings instead of a parameters, which means that if the values of the parameters are changed there will be no restart of the application. As restart is required to activate new parameters values, the IED must be restarted in some way. Either manually or by changing some other parameter at the same time.

The following general settings can be set for the **Phase-phase current measurement** (CMMXU).

IMagCompY: Magnitude compensation to calibrate current measurements at Y% of In, where Y is equal to 5, 30 or 100.

IAngCompY: Angle compensation to calibrate angle measurements at Y% of In, where Y is equal to 5, 30 or 100.

The following general settings can be set for the **Phase-phase voltage measurement** (VMMXU).

VMagCompY: Amplitude compensation to calibrate voltage measurements at Y% of Vn, where Y is equal to 5, 30 or 100.

VAngCompY: Angle compensation to calibrate angle measurements at Y% of Vn, where Y is equal to 5, 30 or 100.

The following general settings can be set for **all monitored quantities** included in the functions (CVMMXN, CMMXU, VMMXU, CMSQI, VMSQI, VNMMXU) X in setting names below equals S, P, Q, PF, V, I, F, IA,IB,IC, VA, VB, VCVAB, VBC, VCA, I1, I2, 3I0, V1, V2 or 3V0.

Xmin: Minimum value for analog signal X set directly in applicable measuring unit.

Xmax: Maximum value for analog signal X.

XZeroDb: Zero point clamping. A signal value less than *XZeroDb* is forced to zero.

Observe the related zero point clamping settings in Setting group N for CVMMXN (*VGenZeroDb* and *IGenZeroDb*). If measured value is below *VGenZeroDb* and/or *IGenZeroDb* calculated S, P, Q and PF will be zero and these settings will override *XZeroDb*.

XRepTyp: Reporting type. Cyclic (*Cyclic*), magnitude deadband (*Dead band*) or integral deadband (*Int deadband*). The reporting interval is controlled by the parameter *XDbRepInt*.

XDbRepInt: Reporting deadband setting. Cyclic reporting is the setting value and is reporting interval in seconds. Magnitude deadband is the setting value in % of measuring range. Integral deadband setting is the integral area, that is, measured value in % of measuring range multiplied by the time between two measured values.

XHiHiLim: High-high limit. Set in applicable measuring unit.

XHiLim: High limit.

XLowLim: Low limit.

XLowLowLim: Low-low limit.

XLimHyst: Hysteresis value in % of range and is common for all limits.

All phase angles are presented in relation to defined reference channel. The parameter *PhaseAngleRef* defines the reference.

Calibration curves

It is possible to calibrate the functions (CVMMXN, CMMXU, VNMMXU and VMMXU) to get class 0.5 presentations of currents, voltages and powers. This is accomplished by magnitude and angle compensation at 5, 30 and 100% of rated current and voltage. The compensation curve will have the characteristic for magnitude and angle compensation of currents as shown in figure 50 (example). The first phase will be used as reference channel and compared with the curve for calculation of factors. The factors will then be used for all related channels.

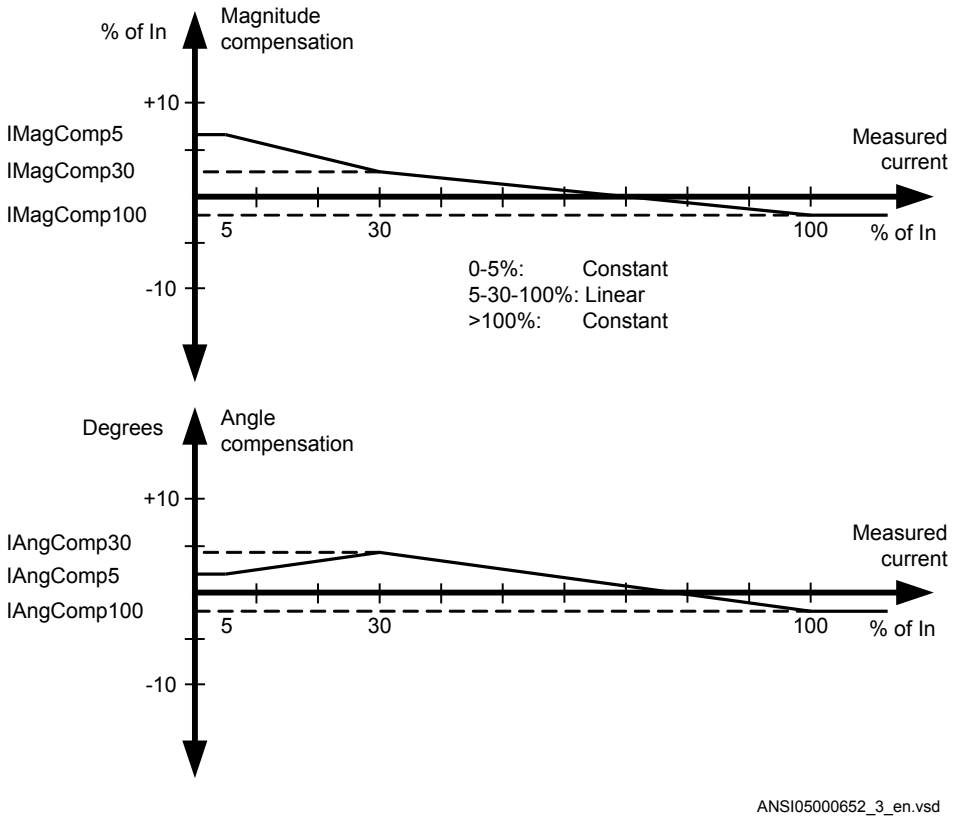

Figure 50: Calibration curves

Setting examples

Three setting examples, in connection to Measurement function (CVMMXN), are provided:

- Measurement function (CVMMXN) application for a 400 kV OHL
- Measurement function (CVMMXN) application on the secondary side of a transformer
- Measurement function (CVMMXN) application for a generator

For each of them detail explanation and final list of selected setting parameters values will be provided.

The available measured values of an IED are depending on the actual hardware (TRM) and the logic configuration made in PCM600.

Measurement function application for a 380 kV OHL

Single line diagram for this application is given in figure 51:

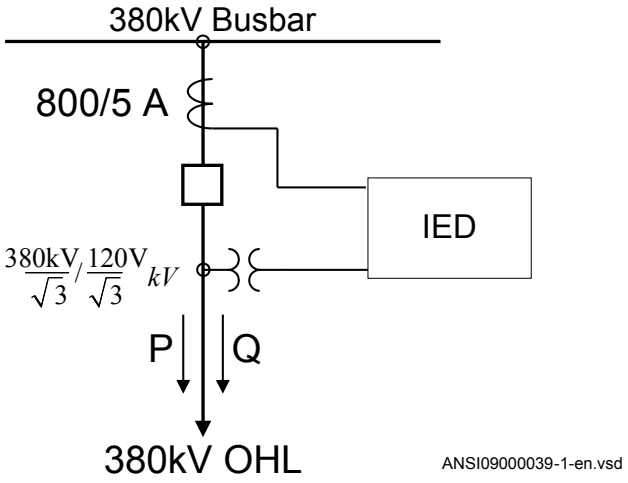

Figure 51: Single line diagram for 380 kV OHL application

In order to monitor, supervise and calibrate the active and reactive power as indicated in figure 51 it is necessary to do the following:

1. Set correctly CT and VT data and phase angle reference channel *PhaseAngleRef* using PCM600 for analog input channels
2. Connect, in PCM600, measurement function to three-phase CT and VT inputs
3. Set under General settings parameters for the Measurement function:
   - general settings as shown in table 94.
   - level supervision of active power as shown in table 95.
   - calibration parameters as shown in table 96.

Table 94: General settings parameters for the Measurement function

Setting	Short Description	Selected value	Comments
Operation	Operation Off/On	On	Function must be *On*
PowAmpFact	Amplitude factor to scale power calculations	1.000	It can be used during commissioning to achieve higher measurement accuracy. Typically no scaling is required
PowAngComp	Angle compensation for phase shift between measured I & U	0.0	It can be used during commissioning to achieve higher measurement accuracy. Typically no angle compensation is required. As well here required direction of P & Q measurement is towards protected object (as per IED internal default direction)
Mode	Selection of measured current and voltage	L1, L2, L3	All three phase-to-ground VT inputs are available
k	Low pass filter coefficient for power measurement, V and I	0.00	Typically no additional filtering is required
VGenZeroDb	Zero point clamping in % of Ubase	25	Set minimum voltage level to 25%. Voltage below 25% will force S, P and Q to zero.
IGenZeroDb	Zero point clamping in % of Ibase	3	Set minimum current level to 3%. Current below 3% will force S, P and Q to zero.
VBase	Base setting for voltage level in kV	400.00	Set rated OHL phase-to-phase voltage
IBase	Base setting for current level in A	800	Set rated primary CT current used for OHL

Table 95: Settings parameters for level supervision

Setting	Short Description	Selected value	Comments
PMin	Minimum value	-750	Minimum expected load
PMax	Minimum value	750	Maximum expected load
PZeroDb	Zero point clamping in 0.001% of range	3000	Set zero point clamping to 45 MW that is, 3% of 1500 MW
PRepTyp	Reporting type	db	Select magnitude deadband supervision
PDbRepInt	Cycl: Report interval (s), Db: In % of range, Int Db: In %s	2	Set ±Δdb=30 MW that is, 2% (larger changes than 30 MW will be reported)
PHiHiLim	High High limit (physical value)	600	High alarm limit that is, extreme overload alarm
PHiLim	High limit (physical value)	500	High warning limit that is, overload warning

Table continues on next page

Setting	Short Description	Selected value	Comments
PLowLim	Low limit (physical value)	-800	Low warning limit. Not active
PLowLowLim	Low Low limit (physical value)	-800	Low alarm limit. Not active
PLimHyst	Hysteresis value in % of range (common for all limits)	2	Set ±Δ Hysteresis MW that is, 2%

Table 96: Settings for calibration parameters

Setting	Short Description	Selected value	Comments
IMagComp5	Magnitude factor to calibrate current at 5% of In	0.00	
IMagComp30	Magnitude factor to calibrate current at 30% of In	0.00	
IMagComp100	Magnitude factor to calibrate current at 100% of In	0.00	
VAmpComp5	Magnitude factor to calibrate voltage at 5% of Vn	0.00	
VMagComp30	Magnitude factor to calibrate voltage at 30% of Vn	0.00	
VMagComp100	Magnitude factor to calibrate voltage at 100% of Vn	0.00	
IAngComp5	Angle calibration for current at 5% of In	0.00	
IAngComp30	Angle pre-calibration for current at 30% of In	0.00	
IAngComp100	Angle pre-calibration for current at 100% of In	0.00	

Measurement function application for a power transformer

Single line diagram for this application is given in figure 52.

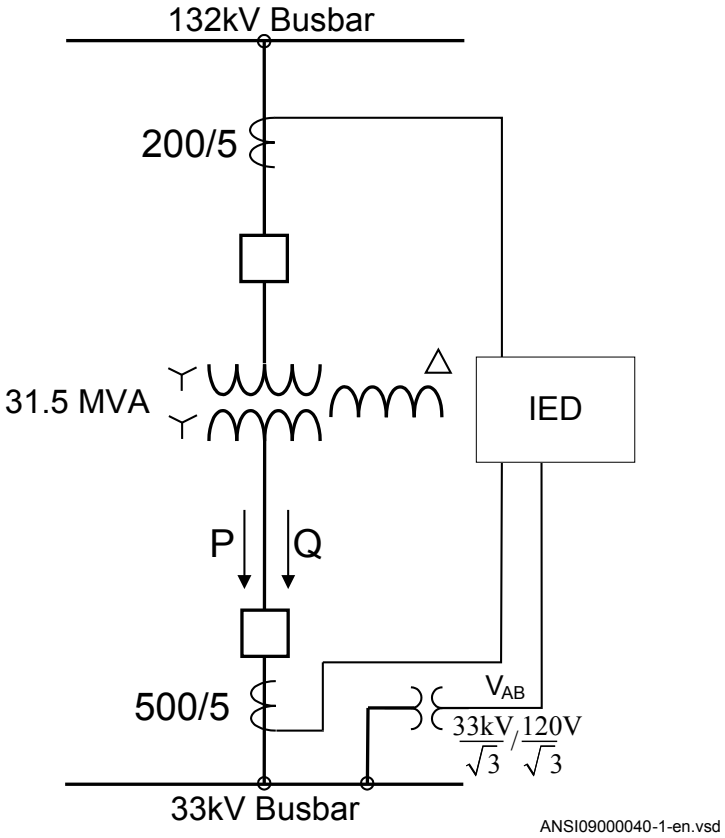

Figure 52: Single line diagram for transformer application

In order to measure the active and reactive power as indicated in figure 52, it is necessary to do the following:

1. Set correctly all CT and VT and phase angle reference channel *PhaseAngleRef* data using PCM600 for analog input channels
2. Connect, in PCM600, measurement function to LV side CT & VT inputs
3. Set the setting parameters for relevant Measurement function as shown in the following table 97:

Table 97: General settings parameters for the Measurement function

Setting	Short description	Selected value	Comment
Operation	Operation *Disabled/Enabled*	*Enabled*	Function must be *Enabled*
PowAmpFact	Magnitude factor to scale power calculations	1.000	Typically no scaling is required
PowAngComp	Angle compensation for phase shift between measured I & V	180.0	Typically no angle compensation is required. However here the required direction of P & Q measurement is towards busbar (Not per IED internal default direction). Therefore angle compensation have to be used in order to get measurements in aliment with the required direction.
Mode	Selection of measured current and voltage	L1L2	Only UL1L2 phase-to-phase voltage is available
k	Low pass filter coefficient for power measurement, V and I	0.00	Typically no additional filtering is required
VGenZeroDb	Zero point clamping in % of Vbase	25	Set minimum voltage level to 25%
IGenZeroDb	Zero point clamping in % of Ibase	3	Set minimum current level to 3%
VBase	Base setting for voltage level in kV	35.00	Set LV side rated phase-to-phase voltage
IBase	Base setting for current level in A	495	Set transformer LV winding rated current

Measurement function application for a generator

Single line diagram for this application is given in figure 53.

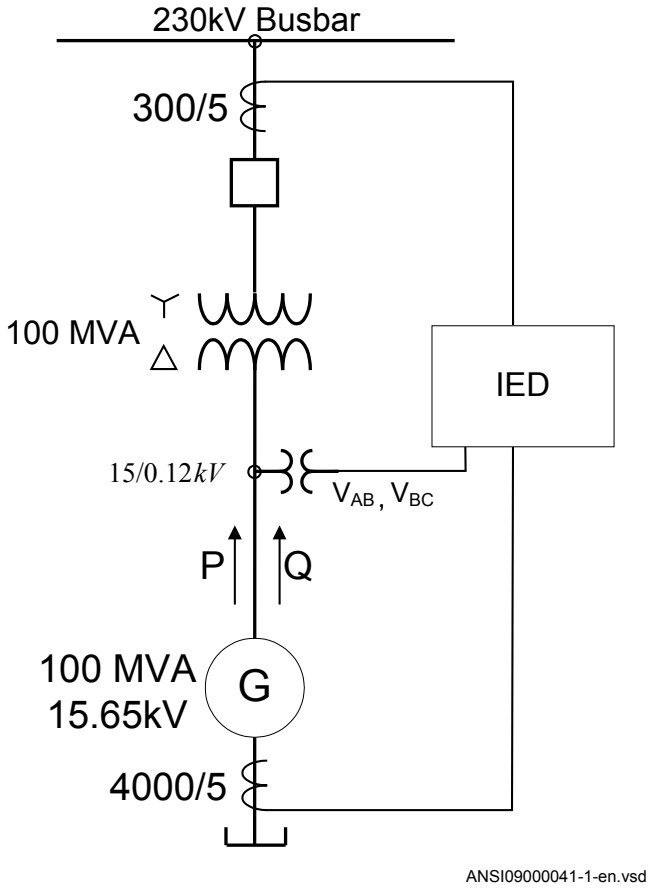

Figure 53: Single line diagram for generator application

In order to measure the active and reactive power as indicated in figure 53, it is necessary to do the following:

1. Set correctly all CT and VT data and phase angle reference channel *PhaseAngleRef* using PCM600 for analog input channels
2. Connect, in PCM600, measurement function to the generator CT & VT inputs
3. Set the setting parameters for relevant Measurement function as shown in the following table:

Table 98: General settings parameters for the Measurement function

Setting	Short description	Selected value	Comment
Operation	Operation Off/On	On	Function must be *On*
PowAmpFact	Amplitude factor to scale power calculations	1.000	Typically no scaling is required
PowAngComp	Angle compensation for phase shift between measured I & V	0.0	Typically no angle compensation is required. As well here required direction of P & Q measurement is towards protected object (as per IED internal default direction)
Mode	Selection of measured current and voltage	Arone	Generator VTs are connected between phases (V-connected)
k	Low pass filter coefficient for power measurement, V and I	0.00	Typically no additional filtering is required
VGenZeroDb	Zero point clamping in % of Vbase	25%	Set minimum voltage level to 25%
IGenZeroDb	Zero point clamping in % of Ibase	3	Set minimum current level to 3%
VBase	Base setting for voltage level in kV	15,65	Set generator rated phase-to-phase voltage
IBase	Base setting for current level in A	3690	Set generator rated current

3.13.1.4 Setting parameters

The available setting parameters of the measurement function (MMXU, MSQI) are depending on the actual hardware (TRM) and the logic configuration made in PCM600.

Table 99: CVMMXN Non group settings (basic)

Name	Values (Range)	Unit	Step	Default	Description
SLowLim	0.0 - 2000.0	%SB	0.1	80.0	Low limit in % of SBase
SLowLowLim	0.0 - 2000.0	%SB	0.1	60.0	Low Low limit in % of SBase
SMin	0.0 - 2000.0	%SB	0.1	50.0	Minimum value in % of SBase
SMax	0.0 - 2000.0	%SB	0.1	200.0	Maximum value in % of SBase
SRepTyp	Cyclic Dead band Int deadband	-	-	Cyclic	Reporting type
PMin	-2000.0 - 2000.0	%SB	0.1	-200.0	Minimum value in % of SBase
PMax	-2000.0 - 2000.0	%SB	0.1	200.0	Maximum value in % of SBase
PRepTyp	Cyclic Dead band Int deadband	-	-	Cyclic	Reporting type
QMin	-2000.0 - 2000.0	%SB	0.1	-200.0	Minimum value in % of SBase
QMax	-2000.0 - 2000.0	%SB	0.1	200.0	Maximum value in % of SBase

Table continues on next page

Name	Values (Range)	Unit	Step	Default	Description
QRepTyp	Cyclic Dead band Int deadband	-	-	Cyclic	Reporting type
PFMin	-1.000 - 1.000	-	0.001	-1.000	Minimum value
PFMax	-1.000 - 1.000	-	0.001	1.000	Maximum value
PFRepTyp	Cyclic Dead band Int deadband	-	-	Cyclic	Reporting type
VMin	0.0 - 200.0	%VB	0.1	50.0	Minimum value in % of UBase
VMax	0.0 - 200.0	%VB	0.1	200.0	Maximum value in % of UBase
VRepTyp	Cyclic Dead band Int deadband	-	-	Cyclic	Reporting type
IMin	0.0 - 500.0	%IB	0.1	50.0	Minimum value in % of IBase
IMax	0.0 - 500.0	%IB	0.1	200.0	Maximum value in % of IBase
IRepTyp	Cyclic Dead band Int deadband	-	-	Cyclic	Reporting type
FrMin	0.000 - 100.000	Hz	0.001	0.000	Minimum value
FrMax	0.000 - 100.000	Hz	0.001	70.000	Maximum value
FrRepTyp	Cyclic Dead band Int deadband	-	-	Cyclic	Reporting type
Operation	Disabled Enabled	-	-	Disabled	Disable/Enable Operation
IBase	1 - 99999	A	1	3000	Base setting for current values in A
VBase	0.05 - 2000.00	kV	0.05	400.00	Base setting for voltage value in kV
SBase	0.05 - 200000.00	MVA	0.05	2080.00	Base setting for power values in MVA
Mode	A, B, C Arone Pos Seq AB BC CA A B C	-	-	A, B, C	Selection of measured current and voltage
PowMagFact	0.000 - 6.000	-	0.001	1.000	Magnitude factor to scale power calculations
PowAngComp	-180.0 - 180.0	Deg	0.1	0.0	Angle compensation for phase shift between measured I & V
k	0.000 - 1.000	-	0.001	0.000	Low pass filter coefficient for power measurement, V and I

Table 100: CVMMXN Non group settings (advanced)

Name	Values (Range)	Unit	Step	Default	Description
SDbRepInt	1 - 300	Type	1	10	Cycl: Report interval (s), Db: In % of range, Int Db: In %s
SZeroDb	0 - 100000	m%	1	500	Zero point clamping in 0.001% of range
SHiHiLim	0.0 - 2000.0	%SB	0.1	150.0	High High limit in % of SBase
SHiLim	0.0 - 2000.0	%SB	0.1	120.0	High limit in % of SBase
SLimHyst	0.000 - 100.000	%	0.001	5.000	Hysteresis value in % of range (common for all limits)
PDbRepInt	1 - 300	Type	1	10	Cycl: Report interval (s), Db: In % of range, Int Db: In %s
PZeroDb	0 - 100000	m%	1	500	Zero point clamping in 0.001% of range
PHiHiLim	-2000.0 - 2000.0	%SB	0.1	150.0	High High limit in % of SBase
PHiLim	-2000.0 - 2000.0	%SB	0.1	120.0	High limit in % of SBase
PLowLim	-2000.0 - 2000.0	%SB	0.1	-120.0	Low limit in % of SBase
PLowLowLim	-2000.0 - 2000.0	%SB	0.1	-150.0	Low Low limit in % of SBase
PLimHyst	0.000 - 100.000	%	0.001	5.000	Hysteresis value in % of range (common for all limits)
QDbRepInt	1 - 300	Type	1	10	Cycl: Report interval (s), Db: In % of range, Int Db: In %s
QZeroDb	0 - 100000	m%	1	500	Zero point clamping in 0.001% of range
QHiHiLim	-2000.0 - 2000.0	%SB	0.1	150.0	High High limit in % of SBase
QHiLim	-2000.0 - 2000.0	%SB	0.1	120.0	High limit in % of SBase
QLowLim	-2000.0 - 2000.0	%SB	0.1	-120.0	Low limit in % of SBase
QLowLowLim	-2000.0 - 2000.0	%SB	0.1	-150.0	Low Low limit in % of SBase
QLimHyst	0.000 - 100.000	%	0.001	5.000	Hysteresis value in % of range (common for all limits)
PFDbRepInt	1 - 300	Type	1	10	Cycl: Report interval (s), Db: In % of range, Int Db: In %s
PFZeroDb	0 - 100000	m%	1	500	Zero point clamping in 0.001% of range
PFHiHiLim	-1.000 - 1.000	-	0.001	1.000	High High limit (physical value)
PFHiLim	-1.000 - 1.000	-	0.001	0.800	High limit (physical value)
PFLowLim	-1.000 - 1.000	-	0.001	-0.800	Low limit (physical value)
PFLowLowLim	-1.000 - 1.000	-	0.001	-1.000	Low Low limit (physical value)
PFLimHyst	0.000 - 100.000	%	0.001	5.000	Hysteresis value in % of range (common for all limits)
VDbRepInt	1 - 300	Type	1	10	Cycl: Report interval (s), Db: In % of range, Int Db: In %s
VZeroDb	0 - 100000	m%	1	500	Zero point clamping in 0.001% of range
VHiHiLim	0.0 - 200.0	%VB	0.1	150.0	High High limit in % of UBase
VHiLim	0.0 - 200.0	%VB	0.1	120.0	High limit in % of UBase

Table continues on next page

Name	Values (Range)	Unit	Step	Default	Description
VLowLim	0.0 - 200.0	%VB	0.1	80.0	Low limit in % of UBase
VLowLowLim	0.0 - 200.0	%VB	0.1	60.0	Low Low limit in % of UBase
VLimHyst	0.000 - 100.000	%	0.001	5.000	Hysteresis value in % of range (common for all limits)
IDbRepInt	1 - 300	Type	1	10	Cycl: Report interval (s), Db: In % of range, Int Db: In %s
IZeroDb	0 - 100000	m%	1	500	Zero point clamping in 0.001% of range
IHiHiLim	0.0 - 500.0	%IB	0.1	150.0	High High limit in % of IBase
IHiLim	0.0 - 500.0	%IB	0.1	120.0	High limit in % of IBase
ILowLim	0.0 - 500.0	%IB	0.1	80.0	Low limit in % of IBase
ILowLowLim	0.0 - 500.0	%IB	0.1	60.0	Low Low limit in % of IBase
ILimHyst	0.000 - 100.000	%	0.001	5.000	Hysteresis value in % of range (common for all limits)
FrDbRepInt	1 - 300	Type	1	10	Cycl: Report interval (s), Db: In % of range, Int Db: In %s
FrZeroDb	0 - 100000	m%	1	500	Zero point clamping in 0.001% of range
FrHiHiLim	0.000 - 100.000	Hz	0.001	65.000	High High limit (physical value)
FrHiLim	0.000 - 100.000	Hz	0.001	63.000	High limit (physical value)
FrLowLim	0.000 - 100.000	Hz	0.001	47.000	Low limit (physical value)
FrLowLowLim	0.000 - 100.000	Hz	0.001	45.000	Low Low limit (physical value)
FrLimHyst	0.000 - 100.000	%	0.001	5.000	Hysteresis value in % of range (common for all limits)
VGenZeroDb	1 - 100	%VB	1	5	Zero point clamping in % of VBase
IGenZeroDb	1 - 100	%IB	1	5	Zero point clamping in % of IBase
VMagComp5	-10.000 - 10.000	%	0.001	0.000	Magnitude factor to calibrate voltage at 5% of Vn
VMagComp30	-10.000 - 10.000	%	0.001	0.000	Magnitude factor to calibrate voltage at 30% of Vn
VMagComp100	-10.000 - 10.000	%	0.001	0.000	Magnitude factor to calibrate voltage at 100% of Vn
IMagComp5	-10.000 - 10.000	%	0.001	0.000	Magnitude factor to calibrate current at 5% of In
IMagComp30	-10.000 - 10.000	%	0.001	0.000	Magnitude factor to calibrate current at 30% of In
IMagComp100	-10.000 - 10.000	%	0.001	0.000	Magnitude factor to calibrate current at 100% of In
IAngComp5	-10.000 - 10.000	Deg	0.001	0.000	Angle calibration for current at 5% of In
IAngComp30	-10.000 - 10.000	Deg	0.001	0.000	Angle calibration for current at 30% of In
IAngComp100	-10.000 - 10.000	Deg	0.001	0.000	Angle calibration for current at 100% of In

Table 101: CMMXU Non group settings (basic)

Name	Values (Range)	Unit	Step	Default	Description
IA_DbRepInt	1 - 300	Type	1	10	Cycl: Report interval (s), Db: In % of range, Int Db: In %s
Operation	Disabled Enabled	-	-	Disabled	Disbled/Enabled operation
IBase	1 - 99999	A	1	3000	Base setting for current level in A
IA_Max	0.000 - 10000000000.000	A	0.001	1000.000	Maximum value
IA_RepTyp	Cyclic Dead band Int deadband	-	-	Cyclic	Reporting type
IA_AngDbRepInt	1 - 300	Type	1	10	Cycl: Report interval (s), Db: In % of range, Int Db: In %s
IB_DbRepInt	1 - 300	Type	1	10	Cycl: Report interval (s), Db: In % of range, Int Db: In %s
IB_Max	0.000 - 10000000000.000	A	0.001	1000.000	Maximum value
IB_RepTyp	Cyclic Dead band Int deadband	-	-	Cyclic	Reporting type
IB_AngDbRepInt	1 - 300	Type	1	10	Cycl: Report interval (s), Db: In % of range, Int Db: In %s
IC_DbRepInt	1 - 300	Type	1	10	Cycl: Report interval (s), Db: In % of range, Int Db: In %s
IC_Max	0.000 - 10000000000.000	A	0.001	1000.000	Maximum value
IC_RepTyp	Cyclic Dead band Int deadband	-	-	Cyclic	Reporting type
IC_AngDbRepInt	1 - 300	Type	1	10	Cycl: Report interval (s), Db: In % of range, Int Db: In %s

Table 102: CMMXU Non group settings (advanced)

Name	Values (Range)	Unit	Step	Default	Description
IA_ZeroDb	0 - 100000	m%	1	0	Zero point clamping in 0.001% of range
IA_HiHiLim	0.000 - 10000000000.000	A	0.001	900.000	High High limit (physical value)
IA_HiLim	0.000 - 10000000000.000	A	0.001	800.000	High limit (physical value)
IMagComp5	-10.000 - 10.000	%	0.001	0.000	Magnitude factor to calibrate current at 5% of In
IMagComp30	-10.000 - 10.000	%	0.001	0.000	Magnitude factor to calibrate current at 30% of In

Table continues on next page

Name	Values (Range)	Unit	Step	Default	Description
IA_LowLim	0.000 - 10000000000.000	A	0.001	0.000	Low limit (physical value)
IA_LowLowLim	0.000 - 10000000000.000	A	0.001	0.000	Low Low limit (physical value)
IMagComp100	-10.000 - 10.000	%	0.001	0.000	Magnitude factor to calibrate current at 100% of In
IAngComp5	-10.000 - 10.000	Deg	0.001	0.000	Angle calibration for current at 5% of In
IA_Min	0.000 - 10000000000.000	A	0.001	0.000	Minimum value
IAngComp30	-10.000 - 10.000	Deg	0.001	0.000	Angle calibration for current at 30% of In
IAngComp100	-10.000 - 10.000	Deg	0.001	0.000	Angle calibration for current at 100% of In
IA_LimHys	0.000 - 100.000	%	0.001	5.000	Hysteresis value in % of range and is common for all limits
IB_ZeroDb	0 - 100000	m%	1	0	Zero point clamping in 0.001% of range
IB_HiHiLim	0.000 - 10000000000.000	A	0.001	900.000	High High limit (physical value)
IB_HiLim	0.000 - 10000000000.000	A	0.001	800.000	High limit (physical value)
IB_LowLim	0.000 - 10000000000.000	A	0.001	0.000	Low limit (physical value)
IB_LowLowLim	0.000 - 10000000000.000	A	0.001	0.000	Low Low limit (physical value)
IB_Min	0.000 - 10000000000.000	A	0.001	0.000	Minimum value
IB_LimHys	0.000 - 100.000	%	0.001	5.000	Hysteresis value in % of range and is common for all limits
IC_ZeroDb	0 - 100000	m%	1	0	Zero point clamping in 0.001% of range
IC_HiHiLim	0.000 - 10000000000.000	A	0.001	900.000	High High limit (physical value)
IC_HiLim	0.000 - 10000000000.000	A	0.001	800.000	High limit (physical value)
IC_LowLim	0.000 - 10000000000.000	A	0.001	0.000	Low limit (physical value)
IC_LowLowLim	0.000 - 10000000000.000	A	0.001	0.000	Low Low limit (physical value)
IC_Min	0.000 - 10000000000.000	A	0.001	0.000	Minimum value
IC_LimHys	0.000 - 100.000	%	0.001	5.000	Hysteresis value in % of range and is common for all limits

Table 103: VNMMXU Non group settings (basic)

Name	Values (Range)	Unit	Step	Default	Description
VA_DbRepInt	1 - 300	Type	1	10	Cycl: Report interval (s), Db: In % of range, Int Db: In %s
Operation	Disabled Enabled	-	-	Disabled	Disbled/Enabled operation
VBase	0.05 - 2000.00	kV	0.05	400.00	Base setting for voltage level in kV
VA_Max	0.000 - 10000000000.000	V	0.001	300000.000	Maximum value
VA_RepTyp	Cyclic Dead band Int deadband	-	-	Cyclic	Reporting type
VA_LimHys	0.000 - 100.000	%	0.001	5.000	Hysteresis value in % of range and is common for all limits
VA_AnDbRepInt	1 - 300	Type	1	10	Cycl: Report interval (s), Db: In % of range, Int Db: In %s
VB_DbRepInt	1 - 300	Type	1	10	Cycl: Report interval (s), Db: In % of range, Int Db: In %s
VB_Max	0.000 - 10000000000.000	V	0.001	300000.000	Maximum value
VB_RepTyp	Cyclic Dead band Int deadband	-	-	Cyclic	Reporting type
VB_LimHys	0.000 - 100.000	%	0.001	5.000	Hysteresis value in % of range and is common for all limits
VB_AnDbRepInt	1 - 300	Type	1	10	Cycl: Report interval (s), Db: In % of range, Int Db: In %s
VC_DbRepInt	1 - 300	Type	1	10	Cycl: Report interval (s), Db: In % of range, Int Db: In %s
VC_Max	0.000 - 10000000000.000	V	0.001	300000.000	Maximum value
VC_RepTyp	Cyclic Dead band Int deadband	-	-	Cyclic	Reporting type
VC_LimHys	0.000 - 100.000	%	0.001	5.000	Hysteresis value in % of range and is common for all limits
VC_AnDbRepInt	1 - 300	Type	1	10	Cycl: Report interval (s), Db: In % of range, Int Db: In %s

Table 104: VNMMXU Non group settings (advanced)

Name	Values (Range)	Unit	Step	Default	Description
VA_ZeroDb	0 - 100000	m%	1	0	Zero point clamping in 0.001% of range
VA_HiHiLim	0.000 - 10000000000.000	V	0.001	260000.000	High High limit (physical value)
VA_HiLim	0.000 - 10000000000.000	V	0.001	240000.000	High limit (physical value)
VA_LowLim	0.000 - 10000000000.000	V	0.001	220000.000	Low limit (physical value)
VA_LowLowLim	0.000 - 10000000000.000	V	0.001	200000.000	Low Low limit (physical value)
VMagComp100	-10.000 - 10.000	%	0.001	0.000	Magnitude factor to calibrate voltage at 100% of Vn
VA_Min	0.000 - 10000000000.000	V	0.001	0.000	Minimum value
VB_ZeroDb	0 - 100000	m%	1	0	Zero point clamping in 0.001% of range
VB_HiHiLim	0.000 - 10000000000.000	V	0.001	260000.000	High High limit (physical value)
VB_HiLim	0.000 - 10000000000.000	V	0.001	240000.000	High limit (physical value)
VB_LowLim	0.000 - 10000000000.000	V	0.001	220000.000	Low limit (physical value)
VB_LowLowLim	0.000 - 10000000000.000	V	0.001	200000.000	Low Low limit (physical value)
VB_Min	0.000 - 10000000000.000	V	0.001	0.000	Minimum value
VC_ZeroDb	0 - 100000	m%	1	0	Zero point clamping in 0.001% of range
VC_HiHiLim	0.000 - 10000000000.000	V	0.001	260000.000	High High limit (physical value)
VC_HiLim	0.000 - 10000000000.000	V	0.001	240000.000	High limit (physical value)
VC_LowLim	0.000 - 10000000000.000	V	0.001	220000.000	Low limit (physical value)
VC_LowLowLim	0.000 - 10000000000.000	V	0.001	200000.000	Low Low limit (physical value)
VC_Min	0.000 - 10000000000.000	V	0.001	0.000	Minimum value

Table 105: VMMXU Non group settings (basic)

Name	Values (Range)	Unit	Step	Default	Description
VAB_DbRepInt	1 - 300	Type	1	10	Cycl: Report interval (s), Db: In % of range, Int Db: In %s
Operation	Disabled Enabled	-	-	Disabled	Disbled/Enabled operation
VBase	0.05 - 2000.00	kV	0.05	400.00	Base setting for voltage level in kV
VAB_Max	0.000 - 10000000000.000	V	0.001	500000.000	Maximum value
VAB_RepTyp	Cyclic Dead band Int deadband	-	-	Cyclic	Reporting type
VAB_AnDbRepInt	1 - 300	Type	1	10	Cycl: Report interval (s), Db: In % of range, Int Db: In %s
VBC_DbRepInt	1 - 300	Type	1	10	Cycl: Report interval (s), Db: In % of range, Int Db: In %s
VBC_Max	0.000 - 10000000000.000	V	0.001	500000.000	Maximum value
VBC_RepTyp	Cyclic Dead band Int deadband	-	-	Cyclic	Reporting type
VBC_AnDbRepInt	1 - 300	Type	1	10	Cycl: Report interval (s), Db: In % of range, Int Db: In %s
VCA_DbRepInt	1 - 300	Type	1	10	Cycl: Report interval (s), Db: In % of range, Int Db: In %s
VCA_Max	0.000 - 10000000000.000	V	0.001	500000.000	Maximum value
VCA_RepTyp	Cyclic Dead band Int deadband	-	-	Cyclic	Reporting type
VCA_AnDbRepInt	1 - 300	Type	1	10	Cycl: Report interval (s), Db: In % of range, Int Db: In %s

Table 106: VMMXU Non group settings (advanced)

Name	Values (Range)	Unit	Step	Default	Description
VAB_ZeroDb	0 - 100000	m%	1	0	Zero point clamping in 0.001% of range
VAB_HiHiLim	0.000 - 10000000000.000	V	0.001	450000.000	High High limit (physical value)
VAB_HiLim	0.000 - 10000000000.000	V	0.001	420000.000	High limit (physical value)
VAB_LowLim	0.000 - 10000000000.000	V	0.001	380000.000	Low limit (physical value)
VAB_LowLowLim	0.000 - 10000000000.000	V	0.001	350000.000	Low Low limit (physical value)

Table continues on next page

Name	Values (Range)	Unit	Step	Default	Description
VMagComp100	-10.000 - 10.000	%	0.001	0.000	Magnitude factor to calibrate voltage at 100% of Vn
VAB_Min	0.000 - 10000000000.000	V	0.001	0.000	Minimum value
VAB_LimHys	0.000 - 100.000	%	0.001	5.000	Hysteresis value in % of range and is common for all limits
VBC_ZeroDb	0 - 100000	m%	1	0	Zero point clamping in 0.001% of range
VBC_HiHiLim	0.000 - 10000000000.000	V	0.001	450000.000	High High limit (physical value)
VBC_HiLim	0.000 - 10000000000.000	V	0.001	420000.000	High limit (physical value)
VBC_LowLim	0.000 - 10000000000.000	V	0.001	380000.000	Low limit (physical value)
VBC_LowLowLim	0.000 - 10000000000.000	V	0.001	350000.000	Low Low limit (physical value)
VBC_Min	0.000 - 10000000000.000	V	0.001	0.000	Minimum value
VBC_LimHys	0.000 - 100.000	%	0.001	5.000	Hysteresis value in % of range and is common for all limits
VCA_ZeroDb	0 - 100000	m%	1	0	Zero point clamping in 0.001% of range
VCA_HiHiLim	0.000 - 10000000000.000	V	0.001	450000.000	High High limit (physical value)
VCA_HiLim	0.000 - 10000000000.000	V	0.001	420000.000	High limit (physical value)
VCA_LowLim	0.000 - 10000000000.000	V	0.001	380000.000	Low limit (physical value)
VCA_LowLowLim	0.000 - 10000000000.000	V	0.001	350000.000	Low Low limit (physical value)
VCA_Min	0.000 - 10000000000.000	V	0.001	0.000	Minimum value
VCA_LimHys	0.000 - 100.000	%	0.001	5.000	Hysteresis value in % of range and is common for all limits

Table 107: CMSQI Non group settings (basic)

Name	Values (Range)	Unit	Step	Default	Description
3I0DbRepInt	1 - 300	Type	1	10	Cycl: Report interval (s), Db: In % of range, Int Db: In %s
3I0Min	0.000 - 10000000000.000	A	0.001	0.000	Minimum value
3I0Max	0.000 - 10000000000.000	A	0.001	1000.000	Maximum value

Table continues on next page

Name	Values (Range)	Unit	Step	Default	Description
3I0RepTyp	Cyclic Dead band Int deadband	-	-	Cyclic	Reporting type
3I0LimHys	0.000 - 100.000	%	0.001	5.000	Hysteresis value in % of range and is common for all limits
3I0AngDbRepInt	1 - 300	Type	1	10	Cycl: Report interval (s), Db: In % of range, Int Db: In %s
Operation	Disabled Enabled	-	-	Disabled	Disbled/Enabled operation
3I0AngMin	-180.000 - 180.000	Deg	0.001	-180.000	Minimum value
3I0AngMax	-180.000 - 180.000	Deg	0.001	180.000	Maximum value
3I0AngRepTyp	Cyclic Dead band Int deadband	-	-	Cyclic	Reporting type
I1DbRepInt	1 - 300	Type	1	10	Cycl: Report interval (s), Db: In % of range, Int Db: In %s
I1Min	0.000 - 10000000000.000	A	0.001	0.000	Minimum value
I1Max	0.000 - 10000000000.000	A	0.001	1000.000	Maximum value
I1RepTyp	Cyclic Dead band Int deadband	-	-	Cyclic	Reporting type
I1AngDbRepInt	1 - 300	Type	1	10	Cycl: Report interval (s), Db: In % of range, Int Db: In %s
I1AngMax	-180.000 - 180.000	Deg	0.001	180.000	Maximum value
I1AngRepTyp	Cyclic Dead band Int deadband	-	-	Cyclic	Reporting type
I2DbRepInt	1 - 300	Type	1	10	Cycl: Report interval (s), Db: In % of range, Int Db: In %s
I2Min	0.000 - 10000000000.000	A	0.001	0.000	Minimum value
I2Max	0.000 - 10000000000.000	A	0.001	1000.000	Maximum value
I2RepTyp	Cyclic Dead band Int deadband	-	-	Cyclic	Reporting type
I2LimHys	0.000 - 100.000	%	0.001	5.000	Hysteresis value in % of range and is common for all limits
I2AngDbRepInt	1 - 300	Type	1	10	Cycl: Report interval (s), Db: In % of range, Int Db: In %s
I2AngMin	-180.000 - 180.000	Deg	0.001	-180.000	Minimum value
I2AngRepTyp	Cyclic Dead band Int deadband	-	-	Cyclic	Reporting type

Table 108: CMSQI Non group settings (advanced)

Name	Values (Range)	Unit	Step	Default	Description
3I0ZeroDb	0 - 100000	m%	1	0	Zero point clamping in 0.001% of range
3I0HiHiLim	0.000 - 10000000000.000	A	0.001	900.000	High High limit (physical value)
3I0HiLim	0.000 - 10000000000.000	A	0.001	800.000	High limit (physical value)
3I0LowLim	0.000 - 10000000000.000	A	0.001	0.000	Low limit (physical value)
3I0LowLowLim	0.000 - 10000000000.000	A	0.001	0.000	Low Low limit (physical value)
3I0AngZeroDb	0 - 100000	m%	1	0	Zero point clamping in 0.001% of range
I1ZeroDb	0 - 100000	m%	1	0	Zero point clamping in 0.001% of range
I1HiHiLim	0.000 - 10000000000.000	A	0.001	900.000	High High limit (physical value)
I1HiLim	0.000 - 10000000000.000	A	0.001	800.000	High limit (physical value)
I1LowLim	0.000 - 10000000000.000	A	0.001	0.000	Low limit (physical value)
I1LowLowLim	0.000 - 10000000000.000	A	0.001	0.000	Low Low limit (physical value)
I1LimHys	0.000 - 100.000	%	0.001	5.000	Hysteresis value in % of range and is common for all limits
I1AngZeroDb	0 - 100000	m%	1	0	Zero point clamping in 0.001% of range
I1AngMin	-180.000 - 180.000	Deg	0.001	-180.000	Minimum value
I2ZeroDb	0 - 100000	m%	1	0	Zero point clamping in 0.001% of range
I2HiHiLim	0.000 - 10000000000.000	A	0.001	900.000	High High limit (physical value)
I2HiLim	0.000 - 10000000000.000	A	0.001	800.000	High limit (physical value)
I2LowLim	0.000 - 10000000000.000	A	0.001	0.000	Low limit (physical value)
I2LowLowLim	0.000 - 10000000000.000	A	0.001	0.000	Low Low limit (physical value)
I2AngZeroDb	0 - 100000	m%	1	0	Zero point clamping in 0.001% of range
I2AngMax	-180.000 - 180.000	Deg	0.001	180.000	Maximum value

Table 109: VMSQI Non group settings (basic)

Name	Values (Range)	Unit	Step	Default	Description
3V0DbRepInt	1 - 300	Type	1	10	Cycl: Report interval (s), Db: In % of range, Int Db: In %s
3V0Min	0.000 - 10000000000.000	V	0.001	0.000	Minimum value
3V0Max	0.000 - 10000000000.000	V	0.001	300000.000	Maximum value
3V0RepTyp	Cyclic Dead band Int deadband	-	-	Cyclic	Reporting type
3V0LimHys	0.000 - 100.000	%	0.001	5.000	Hysteresis value in % of range and is common for all limits
3V0AngDbRepInt	1 - 300	Type	1	10	Cycl: Report interval (s), Db: In % of range, Int Db: In %s
Operation	Disabled Enabled	-	-	Disabled	Disbled/Enabled operation
3V0AngZeroDb	0 - 100000	m%	1	0	Zero point clamping in 0.001% of range
3V0AngMin	-180.000 - 180.000	Deg	0.001	-180.000	Minimum value
3V0AngMax	-180.000 - 180.000	Deg	0.001	180.000	Maximum value
3V0AngRepTyp	Cyclic Dead band Int deadband	-	-	Cyclic	Reporting type
V1DbRepInt	1 - 300	Type	1	10	Cycl: Report interval (s), Db: In % of range, Int Db: In %s
V1Min	0.000 - 10000000000.000	V	0.001	0.000	Minimum value
V1Max	0.000 - 10000000000.000	V	0.001	300000.000	Maximum value
V1RepTyp	Cyclic Dead band Int deadband	-	-	Cyclic	Reporting type
V1LimHys	0.000 - 100.000	%	0.001	5.000	Hysteresis value in % of range and is common for all limits
V1AngDbRepInt	1 - 300	Type	1	10	Cycl: Report interval (s), Db: In % of range, Int Db: In %s
V2DbRepInt	1 - 300	Type	1	10	Cycl: Report interval (s), Db: In % of range, Int Db: In %s
V2Min	0.000 - 10000000000.000	V	0.001	0.000	Minimum value
V2Max	0.000 - 10000000000.000	V	0.001	300000.000	Maximum value
V2RepTyp	Cyclic Dead band Int deadband	-	-	Cyclic	Reporting type

Table continues on next page

Name	Values (Range)	Unit	Step	Default	Description
V2LimHys	0.000 - 100.000	%	0.001	5.000	Hysteresis value in % of range and is common for all limits
V2AngDbRepInt	1 - 300	Type	1	10	Cycl: Report interval (s), Db: In % of range, Int Db: In %s
V2AngMin	-180.000 - 180.000	Deg	0.001	-180.000	Minimum value
V2AngMax	-180.000 - 180.000	Deg	0.001	180.000	Maximum value
V2AngRepTyp	Cyclic Dead band Int deadband	-	-	Cyclic	Reporting type
UAmpPreComp5	-10.000 - 10.000	%	0.001	0.000	Amplitude factor to pre-calibrate voltage at 5% of Ir
UAmpPreComp30	-10.000 - 10.000	%	0.001	0.000	Amplitude factor to pre-calibrate voltage at 30% of Ir
UAmpPreComp100	-10.000 - 10.000	%	0.001	0.000	Amplitude factor to pre-calibrate voltage at 100% of Ir

Table 110: VMSQI Non group settings (advanced)

Name	Values (Range)	Unit	Step	Default	Description
3V0ZeroDb	0 - 100000	m%	1	0	Zero point clamping in 0.001% of range
3V0HiHiLim	0.000 - 10000000000.000	V	0.001	260000.000	High High limit (physical value)
3V0HiLim	0.000 - 10000000000.000	V	0.001	240000.000	High limit (physical value)
3V0LowLim	0.000 - 10000000000.000	V	0.001	220000.000	Low limit (physical value)
3V0LowLowLim	0.000 - 10000000000.000	V	0.001	200000.000	Low Low limit (physical value)
V1ZeroDb	0 - 100000	m%	1	0	Zero point clamping in 0.001% of range
V1HiHiLim	0.000 - 10000000000.000	V	0.001	260000.000	High High limit (physical value)
V1HiLim	0.000 - 10000000000.000	V	0.001	240000.000	High limit (physical value)
V1LowLim	0.000 - 10000000000.000	V	0.001	220000.000	Low limit (physical value)
V1LowLowLim	0.000 - 10000000000.000	V	0.001	200000.000	Low Low limit (physical value)
V1AngZeroDb	0 - 100000	m%	1	0	Zero point clamping in 0.001% of range
V1AngMin	-180.000 - 180.000	Deg	0.001	-180.000	Minimum value
V1AngMax	-180.000 - 180.000	Deg	0.001	180.000	Maximum value
V1AngRepTyp	Cyclic Dead band Int deadband	-	-	Cyclic	Reporting type

Table continues on next page

Name	Values (Range)	Unit	Step	Default	Description
V2ZeroDb	0 - 100000	m%	1	0	Zero point clamping in 0.001% of range
V2HiHiLim	0.000 - 10000000000.000	V	0.001	260000.000	High High limit (physical value)
V2HiLim	0.000 - 10000000000.000	V	0.001	240000.000	High limit (physical value)
V2LowLim	0.000 - 10000000000.000	V	0.001	220000.000	Low limit (physical value)
V2LowLowLim	0.000 - 10000000000.000	V	0.001	200000.000	Low Low limit (physical value)
V2AngZeroDb	0 - 100000	m%	1	0	Zero point clamping in 0.001% of range

3.13.2 Event counter CNTGGIO

3.13.2.1 Identification

Function description	IEC 61850 identification	IEC 60617 identification	ANSI/IEEE C37.2 device number
Event counter	CNTGGIO	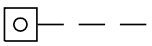	-

3.13.2.2 Setting parameters

The function does not have any parameters available in Local HMI or Protection and Control IED Manager (PCM600)

3.13.3 Event function EVENT

Function description	IEC 61850 identification	IEC 60617 identification	ANSI/IEEE C37.2 device number
Event function	EVENT	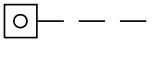	-

3.13.3.1 Introduction

When using a Substation Automation system with LON or SPA communication, time-tagged events can be sent at change or cyclically from the IED to the station level. These events are created from any available signal in the IED that is connected to the Event function (EVENT). The event function block is used for remote communication.

Analog and double indication values are also transferred through EVENT function.

3.13.3.2 Setting guidelines

The parameters for the Event (EVENT) function are set via the local HMI or PCM600.

EventMask (Ch_1 - 16)
The inputs can be set individually as:

- *NoEvents*
- *OnSet*, at pick-up of the signal
- *OnReset*, at drop-out of the signal
- *OnChange*, at both pick-up and drop-out of the signal
- *AutoDetect*

LONChannelMask or *SPAChannelMask*
Definition of which part of the event function block that shall generate events:

- *Disabled*
- *Channel 1-8*
- *Channel 9-16*
- *Channel 1-16*

MinRepIntVal (1 - 16)
A time interval between cyclic events can be set individually for each input channel. This can be set between 0.0 s to 1000.0 s in steps of 0.1 s. It should normally be set to 0, that is, no cyclic communication.

It is important to set the time interval for cyclic events in an optimized way to minimize the load on the station bus.

3.13.3.3 Setting parameters

Table 111: EVENT Non group settings (basic)

Name	Values (Range)	Unit	Step	Default	Description
SPAChannelMask	Disabled Channel 1-8 Channel 9-16 Channel 1-16	-	-	Disabled	SPA channel mask
LONChannelMask	Disabled Channel 1-8 Channel 9-16 Channel 1-16	-	-	Disabled	LON channel mask
EventMask1	NoEvents OnSet OnReset OnChange AutoDetect	-	-	AutoDetect	Reporting criteria for input 1
EventMask2	NoEvents OnSet OnReset OnChange AutoDetect	-	-	AutoDetect	Reporting criteria for input 2
EventMask3	NoEvents OnSet OnReset OnChange AutoDetect	-	-	AutoDetect	Reporting criteria for input 3
EventMask4	NoEvents OnSet OnReset OnChange AutoDetect	-	-	AutoDetect	Reporting criteria for input 4
EventMask5	NoEvents OnSet OnReset OnChange AutoDetect	-	-	AutoDetect	Reporting criteria for input 5
EventMask6	NoEvents OnSet OnReset OnChange AutoDetect	-	-	AutoDetect	Reporting criteria for input 6
EventMask7	NoEvents OnSet OnReset OnChange AutoDetect	-	-	AutoDetect	Reporting criteria for input 7
EventMask8	NoEvents OnSet OnReset OnChange AutoDetect	-	-	AutoDetect	Reporting criteria for input 8

Table continues on next page

Name	Values (Range)	Unit	Step	Default	Description
EventMask9	NoEvents OnSet OnReset OnChange AutoDetect	-	-	AutoDetect	Reporting criteria for input 9
EventMask10	NoEvents OnSet OnReset OnChange AutoDetect	-	-	AutoDetect	Reporting criteria for input 10
EventMask11	NoEvents OnSet OnReset OnChange AutoDetect	-	-	AutoDetect	Reporting criteria for input 11
EventMask12	NoEvents OnSet OnReset OnChange AutoDetect	-	-	AutoDetect	Reporting criteria for input 12
EventMask13	NoEvents OnSet OnReset OnChange AutoDetect	-	-	AutoDetect	Reporting criteria for input 13
EventMask14	NoEvents OnSet OnReset OnChange AutoDetect	-	-	AutoDetect	Reporting criteria for input 14
EventMask15	NoEvents OnSet OnReset OnChange AutoDetect	-	-	AutoDetect	Reporting criteria for input 15
EventMask16	NoEvents OnSet OnReset OnChange AutoDetect	-	-	AutoDetect	Reporting criteria for input 16
MinRepIntVal1	0 - 3600	s	1	2	Minimum reporting interval input 1
MinRepIntVal2	0 - 3600	s	1	2	Minimum reporting interval input 2
MinRepIntVal3	0 - 3600	s	1	2	Minimum reporting interval input 3
MinRepIntVal4	0 - 3600	s	1	2	Minimum reporting interval input 4
MinRepIntVal5	0 - 3600	s	1	2	Minimum reporting interval input 5
MinRepIntVal6	0 - 3600	s	1	2	Minimum reporting interval input 6
MinRepIntVal7	0 - 3600	s	1	2	Minimum reporting interval input 7
MinRepIntVal8	0 - 3600	s	1	2	Minimum reporting interval input 8
MinRepIntVal9	0 - 3600	s	1	2	Minimum reporting interval input 9

Table continues on next page

Name	Values (Range)	Unit	Step	Default	Description
MinRepIntVal10	0 - 3600	s	1	2	Minimum reporting interval input 10
MinRepIntVal11	0 - 3600	s	1	2	Minimum reporting interval input 11
MinRepIntVal12	0 - 3600	s	1	2	Minimum reporting interval input 12
MinRepIntVal13	0 - 3600	s	1	2	Minimum reporting interval input 13
MinRepIntVal14	0 - 3600	s	1	2	Minimum reporting interval input 14
MinRepIntVal15	0 - 3600	s	1	2	Minimum reporting interval input 15
MinRepIntVal16	0 - 3600	s	1	2	Minimum reporting interval input 16

3.13.4 Logical signal status report BINSTATREP

Function description	IEC 61850 identification	IEC 60617 identification	ANSI/IEEE C37.2 device number
Logical signal status report	BINSTATREP	-	-

3.13.4.1 Application

The Logical signal status report (BINSTATREP) function makes it possible for a SPA master to poll signals from various other function blocks.

BINSTATREP has 16 inputs and 16 outputs. The output status follows the inputs and can be read from the local HMI or via SPA communication.

When an input is set, the respective output is set for a user defined time. If the input signal remains set for a longer period, the output will remain set until the input signal resets.

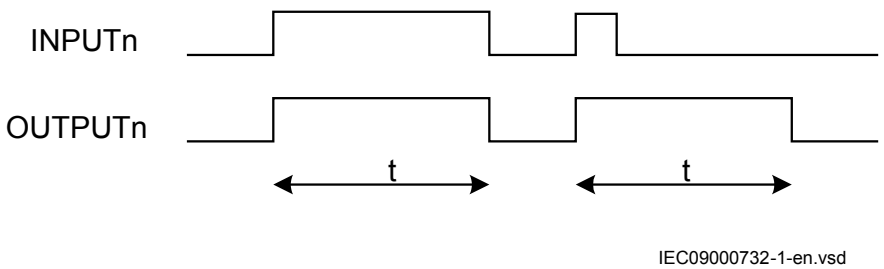

Figure 54: BINSTATREP logical diagram

3.13.4.2 Setting guidelines

The pulse time *t* is the only setting for the Logical signal status report (BINSTATREP). Each output can be set or reset individually, but the pulse time will be the same for all outputs in the entire BINSTATREP function.

3.13.4.3 Setting parameters

Table 112: BINSTATREP Non group settings (basic)

Name	Values (Range)	Unit	Step	Default	Description
t	0.000 - 60000.000	s	0.001	10.000	Time delay of function

3.13.5 Measured value expander block RANGE_XP

Function description	IEC 61850 identification	IEC 60617 identification	ANSI/IEEE C37.2 device number
Measured value expander block	RANGE_XP	-	-

3.13.5.1 Application

The current and voltage measurements functions (CVMMXN, CMMXU, VMMXU and VNMMXU), current and voltage sequence measurement functions (CMSQI and VMSQI) and IEC 61850 generic communication I/O functions (MVGGIO) are provided with measurement supervision functionality. All measured values can be supervised with four settable limits, that is low-low limit, low limit, high limit and high-high limit. The measure value expander block (RANGE_XP) has been introduced to be able to translate the integer output signal from the measuring functions to 5 binary signals, that is below low-low limit, below low limit, normal, above high-high limit or above high limit. The output signals can be used as conditions in the configurable logic.

3.13.5.2 Setting guidelines

There are no settable parameters for the measured value expander block function.

3.13.6 Disturbance report DRPRDRE

Function description	IEC 61850 identification	IEC 60617 identification	ANSI/IEEE C37.2 device number
Analog input signals	A41RADR	-	-
Disturbance report	DRPRDRE	-	-
Disturbance report	A1RADR	-	-
Disturbance report	A4RADR	-	-
Disturbance report	B1RBDR	-	-

3.13.6.1 Application

To get fast, complete and reliable information about disturbances in the primary and/or in the secondary system it is very important to gather information on fault currents, voltages and events. It is also important having a continuous event-logging to be able to monitor in an overview perspective. These tasks are accomplished by the disturbance report function DRPRDRE and facilitate a better understanding of the power system behavior and related primary and secondary equipment during and after a disturbance. An analysis of the recorded data provides valuable information that can be used to explain a disturbance, basis for change of IED setting plan, improve existing equipment, and so on. This information can also be used in a longer perspective when planning for and designing new installations, that is, a disturbance recording could be a part of Functional Analysis (FA).

Disturbance report DRPRDRE, always included in the IED, acquires sampled data of all selected analog and binary signals connected to the function blocks that is,

- maximum 30 external analog signals,
- 10 internal derived analog signals, and
- 96 binary signals.

Disturbance report function is a common name for several functions that is, Indications (IND), Event recorder (ER), Sequential of events (SOE), Trip value recorder (TVR), Disturbance recorder (DR).

Disturbance report function is characterized by great flexibility as far as configuration, starting conditions, recording times, and large storage capacity are concerned. Thus, disturbance report is not dependent on the operation of protective functions, and it can record disturbances that were not discovered by protective functions for one reason or another. Disturbance report can be used as an advanced stand-alone disturbance recorder.

Every disturbance report recording is saved in the IED. The same applies to all events, which are continuously saved in a ring-buffer. Local HMI can be used to get information about the recordings, and the disturbance report files may be uploaded in the PCM600 using the Disturbance handling tool, for report reading or further analysis

(using WaveWin, that can be found on the PCM600 installation CD). The user can also upload disturbance report files using FTP or MMS (over 61850–8–1) clients.

If the IED is connected to a station bus (IEC 61850-8-1), the disturbance recorder (record made and fault number) and the fault locator information are available as GOOSE or Report Control data. The same information is obtainable if IEC60870-5-103 is used.

3.13.6.2 Setting guidelines

The setting parameters for the Disturbance report function DRPRDRE are set via the local HMI or PCM600.

It is possible to handle up to 40 analog and 96 binary signals, either internal signals or signals coming from external inputs. The binary signals are identical in all functions that is, Disturbance recorder (DR), Event recorder (ER), Indication (IND), Trip value recorder (TVR) and Sequential of events (SOE) function.

User-defined names of binary and analog input signals is set using PCM600. The analog and binary signals appear with their user-defined names. The name is used in all related functions (Disturbance recorder (DR), Event recorder (ER), Indication (IND), Trip value recorder (TVR) and Sequential of events (SOE)).

Figure 55 shows the relations between Disturbance report, included functions and function blocks. Sequential of events (SOE), Event recorder (ER) and Indication (IND) uses information from the binary input function blocks (BxRBDR). Trip value recorder (TVR) uses analog information from the analog input function blocks (AxRADR),. Disturbance report function acquires information from both AxRADR and BxRBDR.

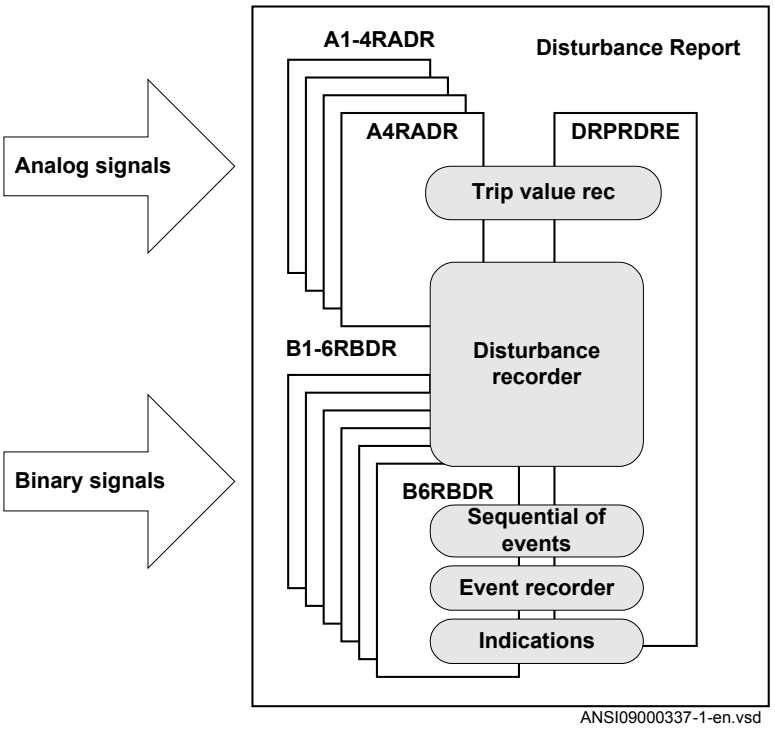

Figure 55: Disturbance report functions and related function blocks

For Disturbance report function there are a number of settings which also influences the sub-functions.

Three LED indications placed above the LCD screen makes it possible to get quick status information about the IED.

Green LED:	
Steady light	In Service
Flashing light	Internal failure
Dark	No power supply
Yellow LED:	
Steady light	A Disturbance Report is triggered
Flashing light	The IED is in test mode
Red LED:	
Steady light	Triggered on binary signal N with *SetLEDN* = *Enabled*

Operation

The operation of Disturbance report function DRPRDRE has to be set *Enabled* or *Disabled*. If *Disabled* is selected, note that no disturbance report is registered, and none sub-function will operate (the only general parameter that influences Sequential of events (SOE)).

Operation = Disabled:

- Disturbance reports are not stored.
- LED information (yellow - pickup, red - trip) is not stored or changed.

Operation = Enabled:

- Disturbance reports are stored, disturbance data can be read from the local HMI and from a PC using PCM600.
- LED information (yellow - pickup, red - trip) is stored.

Every recording will get a number (0 to 999) which is used as identifier (local HMI, disturbance handling tool and IEC 61850). An alternative recording identification is date, time and sequence number. The sequence number is automatically increased by one for each new recording and is reset to zero at midnight. The maximum number of recordings stored in the IED is 100. The oldest recording will be overwritten when a new recording arrives (FIFO).

To be able to delete disturbance records, *Operation* parameter has to be *Enabled*.

The maximum number of recordings depend on each recordings total recording time. Long recording time will reduce the number of recordings to less than 100.

The IED flash disk should NOT be used to store any user files. This might cause disturbance recordings to be deleted due to lack of disk space.

Recording times

Prefault recording time (*PreFaultRecT*) is the recording time before the starting point of the disturbance. The setting should be at least *0.1* s to ensure enough samples for the estimation of pre-fault values in the Trip value recorder (TVR) function.

Postfault recording time (*PostFaultRecT*) is the maximum recording time after the disappearance of the trig-signal (does not influence the Trip value recorder (TVR) function).

Recording time limit (*TimeLimit*) is the maximum recording time after trig. The parameter limits the recording time if some trigging condition (fault-time) is very long or permanently set (does not influence the Trip value recorder (TVR) function).

Post retrigger (*PostRetrig*) can be set to *Enabled* or *Disabled*. Makes it possible to choose performance of Disturbance report function if a new trig signal appears in the post-fault window.

PostRetrig = Disabled

The function is insensitive for new trig signals during post fault time.

PostRetrig = Enabled

The function completes current report and starts a new complete report that is, the latter will include:

- new pre-fault- and fault-time (which will overlap previous report)
- events and indications might be saved in the previous report too, due to overlap
- new trip value calculations if installed, in operation and started

Operation in test mode

If the IED is in test mode and *OpModeTest = Disabled*. Disturbance report function does not save any recordings and no LED information is displayed.

If the IED is in test mode and *OpModeTest = Enabled*. Disturbance report function works in normal mode and the status is indicated in the saved recording.

Binary input signals

Up to 96 binary signals can be selected among internal logical and binary input signals. The configuration tool is used to configure the signals.

For each of the 96 signals, it is also possible to select if the signal is to be used as a trigger for the start of the Disturbance report and if the trigger should be activated on positive (1) or negative (0) slope.

TrigDRN: Disturbance report may trig for binary input N (*Enabled*) or not (*Disabled*).

TrigLevelN: Trig on positive (*Trig on 1*) or negative (*Trig on 0*) slope for binary input N.

Func103N: Function type number (0-255) for binary input N according to IEC-60870-5-103, that is, 128: Distance protection, 160: overcurrent protection, 176: transformer differential protection and 192: line differential protection.

Info103N: Information number (0-255) for binary input N according to IEC-60870-5-103, that is, 69-71: Trip L1-L3, 78-83: Zone 1-6.

See also description in the chapter IEC 60870-5-103.

Analog input signals

Up to 40 analog signals can be selected among internal analog and analog input signals. PCM600 is used to configure the signals.

For retrieving remote data from LDCM module, the Disturbance report function should not be connected to a 3 ms SMAI function block if this is the only intended use for the remote data.

The analog trigger of Disturbance report is not affected if analog input M is to be included in the disturbance recording or not (*OperationM = Enabled*/*Disabled*).

If *OperationM = Disabled*, no waveform (samples) will be recorded and reported in graph. However, Trip value, pre-fault and fault value will be recorded and reported. The input channel can still be used to trig the disturbance recorder.

If *OperationM = Enabled*, waveform (samples) will also be recorded and reported in graph.

NomValueM: Nominal value for input M.

OverTrigOpM, *UnderTrigOpM*: Over or Under trig operation, Disturbance report may trig for high/low level of analog input M (*Enabled*) or not (*Disabled*).

OverTrigLeM, *UnderTrigLeM*: Over or under trig level, Trig high/low level relative nominal value for analog input M in percent of nominal value.

Sub-function parameters

All functions are in operation as long as Disturbance report is in operation.

Indications

IndicationMaN: Indication mask for binary input N. If set (*Show*), a status change of that particular input, will be fetched and shown in the disturbance summary on local HMI. If not set (*Hide*), status change will not be indicated.

SetLEDN: Set red LED on local HMI in front of the IED if binary input N changes status.

Disturbance recorder

OperationM: Analog channel M is to be recorded by the disturbance recorder (*Enabled*) or not (*Disabled*).

If *OperationM = Disabled*, no waveform (samples) will be recorded and reported in graph. However, Trip value, pre-fault and fault value will be recorded and reported. The input channel can still be used to trig the disturbance recorder.

If *OperationM = Enabled*, waveform (samples) will also be recorded and reported in graph.

Event recorder

Event recorder (ER) function has no dedicated parameters.

Trip value recorder

ZeroAngleRef: The parameter defines which analog signal that will be used as phase angle reference for all other analog input signals. This signal will also be used for frequency measurement and the measured frequency is used when calculating trip values. It is suggested to point out a sampled voltage input signal, for example, a line or busbar phase voltage (channel 1-30).

Sequential of events

function has no dedicated parameters.

Consideration

The density of recording equipment in power systems is increasing, since the number of modern IEDs, where recorders are included, is increasing. This leads to a vast number of recordings at every single disturbance and a lot of information has to be handled if the recording functions do not have proper settings. The goal is to optimize the settings in each IED to be able to capture just valuable disturbances and to maximize the number that is possible to save in the IED.

The recording time should not be longer than necessary (*PostFaultrecT* and *TimeLimit*).

- Should the function record faults only for the protected object or cover more?
- How long is the longest expected fault clearing time?
- Is it necessary to include reclosure in the recording or should a persistent fault generate a second recording (*PostRetrig*)?

Minimize the number of recordings:

- Binary signals: Use only relevant signals to start the recording that is, protection trip, carrier receive and/or pickup signals.
- Analog signals: The level triggering should be used with great care, since unfortunate settings will cause enormously number of recordings. If nevertheless analog input triggering is used, chose settings by a sufficient margin from normal operation values. Phase voltages are not recommended for trigging.

Remember that values of parameters set elsewhere are linked to the information on a report. Such parameters are, for example, station and object identifiers, CT and VT ratios.

3.13.6.3 Setting parameters

Table 113: DRPRDRE Non group settings (basic)

Name	Values (Range)	Unit	Step	Default	Description
Operation	Disabled Enabled	-	-	Disabled	Operation Enable/Disable
PreFaultRecT	0.05 - 9.90	s	0.01	0.10	Pre-fault recording time
PostFaultRecT	0.1 - 10.0	s	0.1	0.5	Post-fault recording time
TimeLimit	0.5 - 10.0	s	0.1	1.0	Fault recording time limit
PostRetrig	Disabled Enabled	-	-	Disabled	Post-fault retrig enabled (On) or not (Off)
ZeroAngleRef	1 - 30	Ch	1	1	Reference channel (voltage), phasors, frequency measurement
OpModeTest	Disabled Enabled	-	-	Disabled	Operation mode during test mode

Table 114: A1RADR Non group settings (basic)

Name	Values (Range)	Unit	Step	Default	Description
Operation01	Disabled Enabled	-	-	Disabled	Operation On/Off
NomValue01	0.0 - 999999.9	-	0.1	0.0	Nominal value for analog channel 1
UnderTrigOp01	Disabled Enabled	-	-	Disabled	Use under level trig for analog cha 1 (on) or not (off)
UnderTrigLe01	0 - 200	%	1	50	Under trigger level for analog cha 1 in % of signal
OverTrigOp01	Disabled Enabled	-	-	Disabled	Use over level trig for analog cha 1 (on) or not (off)
OverTrigLe01	0 - 5000	%	1	200	Over trigger level for analog cha 1 in % of signal
Operation02	Disabled Enabled	-	-	Disabled	Operation On/Off
NomValue02	0.0 - 999999.9	-	0.1	0.0	Nominal value for analog channel 2
UnderTrigOp02	Disabled Enabled	-	-	Disabled	Use under level trig for analog cha 2 (on) or not (off)
UnderTrigLe02	0 - 200	%	1	50	Under trigger level for analog cha 2 in % of signal
OverTrigOp02	Disabled Enabled	-	-	Disabled	Use over level trig for analog cha 2 (on) or not (off)
OverTrigLe02	0 - 5000	%	1	200	Over trigger level for analog cha 2 in % of signal

Table continues on next page

Name	Values (Range)	Unit	Step	Default	Description
Operation03	Disabled Enabled	-	-	Disabled	Operation On/Off
NomValue03	0.0 - 999999.9	-	0.1	0.0	Nominal value for analog channel 3
UnderTrigOp03	Disabled Enabled	-	-	Disabled	Use under level trig for analog cha 3 (on) or not (off)
UnderTrigLe03	0 - 200	%	1	50	Under trigger level for analog cha 3 in % of signal
OverTrigOp03	Disabled Enabled	-	-	Disabled	Use over level trig for analog cha 3 (on) or not (off)
OverTrigLe03	0 - 5000	%	1	200	Overtrigger level for analog cha 3 in % of signal
Operation04	Disabled Enabled	-	-	Disabled	Operation On/Off
NomValue04	0.0 - 999999.9	-	0.1	0.0	Nominal value for analog channel 4
UnderTrigOp04	Disabled Enabled	-	-	Disabled	Use under level trig for analog cha 4 (on) or not (off)
UnderTrigLe04	0 - 200	%	1	50	Under trigger level for analog cha 4 in % of signal
OverTrigOp04	Disabled Enabled	-	-	Disabled	Use over level trig for analog cha 4 (on) or not (off)
OverTrigLe04	0 - 5000	%	1	200	Over trigger level for analog cha 4 in % of signal
Operation05	Disabled Enabled	-	-	Disabled	Operation On/Off
NomValue05	0.0 - 999999.9	-	0.1	0.0	Nominal value for analog channel 5
UnderTrigOp05	Disabled Enabled	-	-	Disabled	Use under level trig for analog cha 5 (on) or not (off)
UnderTrigLe05	0 - 200	%	1	50	Under trigger level for analog cha 5 in % of signal
OverTrigOp05	Disabled Enabled	-	-	Disabled	Use over level trig for analog cha 5 (on) or not (off)
OverTrigLe05	0 - 5000	%	1	200	Over trigger level for analog cha 5 in % of signal
Operation06	Disabled Enabled	-	-	Disabled	Operation On/Off
NomValue06	0.0 - 999999.9	-	0.1	0.0	Nominal value for analog channel 6
UnderTrigOp06	Disabled Enabled	-	-	Disabled	Use under level trig for analog cha 6 (on) or not (off)
UnderTrigLe06	0 - 200	%	1	50	Under trigger level for analog cha 6 in % of signal
OverTrigOp06	Disabled Enabled	-	-	Disabled	Use over level trig for analog cha 6 (on) or not (off)
OverTrigLe06	0 - 5000	%	1	200	Over trigger level for analog cha 6 in % of signal
Operation07	Disabled Enabled	-	-	Disabled	Operation On/Off
NomValue07	0.0 - 999999.9	-	0.1	0.0	Nominal value for analog channel 7

Table continues on next page

Name	Values (Range)	Unit	Step	Default	Description
UnderTrigOp07	Disabled Enabled	-	-	Disabled	Use under level trig for analog cha 7 (on) or not (off)
UnderTrigLe07	0 - 200	%	1	50	Under trigger level for analog cha 7 in % of signal
OverTrigOp07	Disabled Enabled	-	-	Disabled	Use over level trig for analog cha 7 (on) or not (off)
OverTrigLe07	0 - 5000	%	1	200	Over trigger level for analog cha 7 in % of signal
Operation08	Disabled Enabled	-	-	Disabled	Operation On/Off
NomValue08	0.0 - 999999.9	-	0.1	0.0	Nominal value for analog channel 8
UnderTrigOp08	Disabled Enabled	-	-	Disabled	Use under level trig for analog cha 8 (on) or not (off)
UnderTrigLe08	0 - 200	%	1	50	Under trigger level for analog cha 8 in % of signal
OverTrigOp08	Disabled Enabled	-	-	Disabled	Use over level trig for analog cha 8 (on) or not (off)
OverTrigLe08	0 - 5000	%	1	200	Over trigger level for analog cha 8 in % of signal
Operation09	Disabled Enabled	-	-	Disabled	Operation On/Off
NomValue09	0.0 - 999999.9	-	0.1	0.0	Nominal value for analog channel 9
UnderTrigOp09	Disabled Enabled	-	-	Disabled	Use under level trig for analog cha 9 (on) or not (off)
UnderTrigLe09	0 - 200	%	1	50	Under trigger level for analog cha 9 in % of signal
OverTrigOp09	Disabled Enabled	-	-	Disabled	Use over level trig for analog cha 9 (on) or not (off)
OverTrigLe09	0 - 5000	%	1	200	Over trigger level for analog cha 9 in % of signal
Operation10	Disabled Enabled	-	-	Disabled	Operation On/Off
NomValue10	0.0 - 999999.9	-	0.1	0.0	Nominal value for analog channel 10
UnderTrigOp10	Disabled Enabled	-	-	Disabled	Use under level trig for analog cha 10 (on) or not (off)
UnderTrigLe10	0 - 200	%	1	50	Under trigger level for analog cha 10 in % of signal
OverTrigOp10	Disabled Enabled	-	-	Disabled	Use over level trig for analog cha 10 (on) or not (off)
OverTrigLe10	0 - 5000	%	1	200	Over trigger level for analog cha 10 in % of signal

Table 115: A4RADR Non group settings (basic)

Name	Values (Range)	Unit	Step	Default	Description
Operation31	Disabled Enabled	-	-	Disabled	Operation On/off
NomValue31	0.0 - 999999.9	-	0.1	0.0	Nominal value for analog channel 31
UnderTrigOp31	Disabled Enabled	-	-	Disabled	Use under level trig for analog cha 31 (on) or not (off)
UnderTrigLe31	0 - 200	%	1	50	Under trigger level for analog cha 31 in % of signal
OverTrigOp31	Disabled Enabled	-	-	Disabled	Use over level trig for analog cha 31 (on) or not (off)
OverTrigLe31	0 - 5000	%	1	200	Over trigger level for analog cha 31 in % of signal
Operation32	Disabled Enabled	-	-	Disabled	Operation On/off
NomValue32	0.0 - 999999.9	-	0.1	0.0	Nominal value for analog channel 32
UnderTrigOp32	Disabled Enabled	-	-	Disabled	Use under level trig for analog cha 32 (on) or not (off)
UnderTrigLe32	0 - 200	%	1	50	Under trigger level for analog cha 32 in % of signal
OverTrigOp32	Disabled Enabled	-	-	Disabled	Use over level trig for analog cha 32 (on) or not (off)
OverTrigLe32	0 - 5000	%	1	200	Over trigger level for analog cha 32 in % of signal
Operation33	Disabled Enabled	-	-	Disabled	Operation On/off
NomValue33	0.0 - 999999.9	-	0.1	0.0	Nominal value for analog channel 33
UnderTrigOp33	Disabled Enabled	-	-	Disabled	Use under level trig for analog cha 33 (on) or not (off)
UnderTrigLe33	0 - 200	%	1	50	Under trigger level for analog cha 33 in % of signal
OverTrigOp33	Disabled Enabled	-	-	Disabled	Use over level trig for analog cha 33 (on) or not (off)
OverTrigLe33	0 - 5000	%	1	200	Overtrigger level for analog cha 33 in % of signal
Operation34	Disabled Enabled	-	-	Disabled	Operation On/off
NomValue34	0.0 - 999999.9	-	0.1	0.0	Nominal value for analog channel 34
UnderTrigOp34	Disabled Enabled	-	-	Disabled	Use under level trig for analog cha 34 (on) or not (off)
UnderTrigLe34	0 - 200	%	1	50	Under trigger level for analog cha 34 in % of signal
OverTrigOp34	Disabled Enabled	-	-	Disabled	Use over level trig for analog cha 34 (on) or not (off)

Table continues on next page

Name	Values (Range)	Unit	Step	Default	Description
OverTrigLe34	0 - 5000	%	1	200	Over trigger level for analog cha 34 in % of signal
Operation35	Disabled Enabled	-	-	Disabled	Operation On/off
NomValue35	0.0 - 999999.9	-	0.1	0.0	Nominal value for analog channel 35
UnderTrigOp35	Disabled Enabled	-	-	Disabled	Use under level trig for analog cha 35 (on) or not (off)
UnderTrigLe35	0 - 200	%	1	50	Under trigger level for analog cha 35 in % of signal
OverTrigOp35	Disabled Enabled	-	-	Disabled	Use over level trig for analog cha 35 (on) or not (off)
OverTrigLe35	0 - 5000	%	1	200	Over trigger level for analog cha 35 in % of signal
Operation36	Disabled Enabled	-	-	Disabled	Operation On/off
NomValue36	0.0 - 999999.9	-	0.1	0.0	Nominal value for analog channel 36
UnderTrigOp36	Disabled Enabled	-	-	Disabled	Use under level trig for analog cha 36 (on) or not (off)
UnderTrigLe36	0 - 200	%	1	50	Under trigger level for analog cha 36 in % of signal
OverTrigOp36	Disabled Enabled	-	-	Disabled	Use over level trig for analog cha 36 (on) or not (off)
OverTrigLe36	0 - 5000	%	1	200	Over trigger level for analog cha 36 in % of signal
Operation37	Disabled Enabled	-	-	Disabled	Operation On/off
NomValue37	0.0 - 999999.9	-	0.1	0.0	Nominal value for analog channel 37
UnderTrigOp37	Disabled Enabled	-	-	Disabled	Use under level trig for analog cha 37 (on) or not (off)
UnderTrigLe37	0 - 200	%	1	50	Under trigger level for analog cha 37 in % of signal
OverTrigOp37	Disabled Enabled	-	-	Disabled	Use over level trig for analog cha 37 (on) or not (off)
OverTrigLe37	0 - 5000	%	1	200	Over trigger level for analog cha 37 in % of signal
Operation38	Disabled Enabled	-	-	Disabled	Operation On/off
NomValue38	0.0 - 999999.9	-	0.1	0.0	Nominal value for analog channel 38
UnderTrigOp38	Disabled Enabled	-	-	Disabled	Use under level trig for analog cha 38 (on) or not (off)
UnderTrigLe38	0 - 200	%	1	50	Under trigger level for analog cha 38 in % of signal
OverTrigOp38	Disabled Enabled	-	-	Disabled	Use over level trig for analog cha 38 (on) or not (off)

Table continues on next page

Name	Values (Range)	Unit	Step	Default	Description
OverTrigLe38	0 - 5000	%	1	200	Over trigger level for analog cha 38 in % of signal
Operation39	Disabled Enabled	-	-	Disabled	Operation On/off
NomValue39	0.0 - 999999.9	-	0.1	0.0	Nominal value for analog channel 39
UnderTrigOp39	Disabled Enabled	-	-	Disabled	Use under level trig for analog cha 39 (on) or not (off)
UnderTrigLe39	0 - 200	%	1	50	Under trigger level for analog cha 39 in % of signal
OverTrigOp39	Disabled Enabled	-	-	Disabled	Use over level trig for analog cha 39 (on) or not (off)
OverTrigLe39	0 - 5000	%	1	200	Over trigger level for analog cha 39 in % of signal
Operation40	Disabled Enabled	-	-	Disabled	Operation On/off
NomValue40	0.0 - 999999.9	-	0.1	0.0	Nominal value for analog channel 40
UnderTrigOp40	Disabled Enabled	-	-	Disabled	Use under level trig for analog cha 40 (on) or not (off)
UnderTrigLe40	0 - 200	%	1	50	Under trigger level for analog cha 40 in % of signal
OverTrigOp40	Disabled Enabled	-	-	Disabled	Use over level trig for analog cha 40 (on) or not (off)
OverTrigLe40	0 - 5000	%	1	200	Over trigger level for analog cha 40 in % of signal

Table 116: B1RBDR Non group settings (basic)

Name	Values (Range)	Unit	Step	Default	Description
Operation01	Disabled Enabled	-	-	Disabled	Trigger operation On/Off
TrigLevel01	Trig on 0 Trig on 1	-	-	Trig on 1	Trig on positiv (1) or negative (0) slope for binary inp 1
IndicationMa01	Hide Show	-	-	Hide	Indication mask for binary channel 1
SetLED01	Disabled Enabled	-	-	Disabled	Set red-LED on HMI for binary channel 1
Operation02	Disabled Enabled	-	-	Disabled	Trigger operation On/Off
TrigLevel02	Trig on 0 Trig on 1	-	-	Trig on 1	Trig on positiv (1) or negative (0) slope for binary inp 2
IndicationMa02	Hide Show	-	-	Hide	Indication mask for binary channel 2
SetLED02	Disabled Enabled	-	-	Disabled	Set red-LED on HMI for binary channel 2

Table continues on next page

Name	Values (Range)	Unit	Step	Default	Description
Operation03	Disabled Enabled	-	-	Disabled	Trigger operation On/Off
TrigLevel03	Trig on 0 Trig on 1	-	-	Trig on 1	Trig on positiv (1) or negative (0) slope for binary inp 3
IndicationMa03	Hide Show	-	-	Hide	Indication mask for binary channel 3
SetLED03	Disabled Enabled	-	-	Disabled	Set red-LED on HMI for binary channel 3
Operation04	Disabled Enabled	-	-	Disabled	Trigger operation On/Off
TrigLevel04	Trig on 0 Trig on 1	-	-	Trig on 1	Trig on positiv (1) or negative (0) slope for binary inp 4
IndicationMa04	Hide Show	-	-	Hide	Indication mask for binary channel 4
SetLED04	Disabled Enabled	-	-	Disabled	Set red-LED on HMI for binary channel 4
Operation05	Disabled Enabled	-	-	Disabled	Trigger operation On/Off
TrigLevel05	Trig on 0 Trig on 1	-	-	Trig on 1	Trig on positiv (1) or negative (0) slope for binary inp 5
IndicationMa05	Hide Show	-	-	Hide	Indication mask for binary channel 5
SetLED05	Disabled Enabled	-	-	Disabled	Set red-LED on HMI for binary channel 5
Operation06	Disabled Enabled	-	-	Disabled	Trigger operation On/Off
TrigLevel06	Trig on 0 Trig on 1	-	-	Trig on 1	Trig on positiv (1) or negative (0) slope for binary inp 6
IndicationMa06	Hide Show	-	-	Hide	Indication mask for binary channel 6
SetLED06	Disabled Enabled	-	-	Disabled	Set red-LED on HMI for binary channel 6
Operation07	Disabled Enabled	-	-	Disabled	Trigger operation On/Off
TrigLevel07	Trig on 0 Trig on 1	-	-	Trig on 1	Trig on positiv (1) or negative (0) slope for binary inp 7
IndicationMa07	Hide Show	-	-	Hide	Indication mask for binary channel 7
SetLED07	Disabled Enabled	-	-	Disabled	Set red-LED on HMI for binary channel 7
Operation08	Disabled Enabled	-	-	Disabled	Trigger operation On/Off
TrigLevel08	Trig on 0 Trig on 1	-	-	Trig on 1	Trig on positiv (1) or negative (0) slope for binary inp 8

Table continues on next page

Name	Values (Range)	Unit	Step	Default	Description
IndicationMa08	Hide Show	-	-	Hide	Indication mask for binary channel 8
SetLED08	Disabled Enabled	-	-	Disabled	Set red-LED on HMI for binary channel 8
Operation09	Disabled Enabled	-	-	Disabled	Trigger operation On/Off
TrigLevel09	Trig on 0 Trig on 1	-	-	Trig on 1	Trig on positiv (1) or negative (0) slope for binary inp 9
IndicationMa09	Hide Show	-	-	Hide	Indication mask for binary channel 9
SetLED09	Disabled Enabled	-	-	Disabled	Set red-LED on HMI for binary channel 9
Operation10	Disabled Enabled	-	-	Disabled	Trigger operation On/Off
TrigLevel10	Trig on 0 Trig on 1	-	-	Trig on 1	Trig on positiv (1) or negative (0) slope for binary inp 10
IndicationMa10	Hide Show	-	-	Hide	Indication mask for binary channel 10
SetLED10	Disabled Enabled	-	-	Disabled	Set red-LED on HMI for binary channel 10
Operation11	Disabled Enabled	-	-	Disabled	Trigger operation On/Off
TrigLevel11	Trig on 0 Trig on 1	-	-	Trig on 1	Trig on positiv (1) or negative (0) slope for binary inp 11
IndicationMa11	Hide Show	-	-	Hide	Indication mask for binary channel 11
SetLED11	Disabled Enabled	-	-	Disabled	Set red-LED on HMI for binary channel 11
Operation12	Disabled Enabled	-	-	Disabled	Trigger operation On/Off
TrigLevel12	Trig on 0 Trig on 1	-	-	Trig on 1	Trig on positiv (1) or negative (0) slope for binary inp 12
IndicationMa12	Hide Show	-	-	Hide	Indication mask for binary channel 12
SetLED12	Disabled Enabled	-	-	Disabled	Set red-LED on HMI for binary input 12
Operation13	Disabled Enabled	-	-	Disabled	Trigger operation On/Off
TrigLevel13	Trig on 0 Trig on 1	-	-	Trig on 1	Trig on positiv (1) or negative (0) slope for binary inp 13
IndicationMa13	Hide Show	-	-	Hide	Indication mask for binary channel 13
SetLED13	Disabled Enabled	-	-	Disabled	Set red-LED on HMI for binary channel 13

Table continues on next page

Name	Values (Range)	Unit	Step	Default	Description
Operation14	Disabled Enabled	-	-	Disabled	Trigger operation On/Off
TrigLevel14	Trig on 0 Trig on 1	-	-	Trig on 1	Trig on positiv (1) or negative (0) slope for binary inp 14
IndicationMa14	Hide Show	-	-	Hide	Indication mask for binary channel 14
SetLED14	Disabled Enabled	-	-	Disabled	Set red-LED on HMI for binary channel 14
Operation15	Disabled Enabled	-	-	Disabled	Trigger operation On/Off
TrigLevel15	Trig on 0 Trig on 1	-	-	Trig on 1	Trig on positiv (1) or negative (0) slope for binary inp 15
IndicationMa15	Hide Show	-	-	Hide	Indication mask for binary channel 15
SetLED15	Disabled Enabled	-	-	Disabled	Set red-LED on HMI for binary channel 15
Operation16	Disabled Enabled	-	-	Disabled	Trigger operation On/Off
TrigLevel16	Trig on 0 Trig on 1	-	-	Trig on 1	Trig on positiv (1) or negative (0) slope for binary inp 16
IndicationMa16	Hide Show	-	-	Hide	Indication mask for binary channel 16
SetLED16	Disabled Enabled	-	-	Disabled	Set red-LED on HMI for binary channel 16
FUNT1	0 - 255	FunT	1	0	Function type for binary channel 1 (IEC -60870-5-103)
FUNT2	0 - 255	FunT	1	0	Function type for binary channel 2 (IEC -60870-5-103)
FUNT3	0 - 255	FunT	1	0	Function type for binary channel 3 (IEC -60870-5-103)
FUNT4	0 - 255	FunT	1	0	Function type for binary channel 4 (IEC -60870-5-103)
FUNT5	0 - 255	FunT	1	0	Function type for binary channel 5 (IEC -60870-5-103)
FUNT6	0 - 255	FunT	1	0	Function type for binary channel 6 (IEC -60870-5-103)
FUNT7	0 - 255	FunT	1	0	Function type for binary channel 7 (IEC -60870-5-103)
FUNT8	0 - 255	FunT	1	0	Function type for binary channel 8 (IEC -60870-5-103)
FUNT9	0 - 255	FunT	1	0	Function type for binary channel 9 (IEC -60870-5-103)
FUNT10	0 - 255	FunT	1	0	Function type for binary channel 10 (IEC -60870-5-103)

Table continues on next page

Name	Values (Range)	Unit	Step	Default	Description
FUNT11	0 - 255	FunT	1	0	Function type for binary channel 11 (IEC -60870-5-103)
FUNT12	0 - 255	FunT	1	0	Function type for binary channel 12 (IEC -60870-5-103)
FUNT13	0 - 255	FunT	1	0	Function type for binary channel 13 (IEC -60870-5-103)
FUNT14	0 - 255	FunT	1	0	Function type for binary channel 14 (IEC -60870-5-103)
FUNT15	0 - 255	FunT	1	0	Function type for binary channel 15 (IEC -60870-5-103)
FUNT16	0 - 255	FunT	1	0	Function type for binary channel 16 (IEC -60870-5-103)
INFNO1	0 - 255	InfNo	1	0	Information number for binary channel 1 (IEC -60870-5-103)
INFNO2	0 - 255	InfNo	1	0	Information number for binary channel 2 (IEC -60870-5-103)
INFNO3	0 - 255	InfNo	1	0	Information number for binary channel 3 (IEC -60870-5-103)
INFNO4	0 - 255	InfNo	1	0	Information number for binary channel 4 (IEC -60870-5-103)
INFNO5	0 - 255	InfNo	1	0	Information number for binary channel 5 (IEC -60870-5-103)
INFNO6	0 - 255	InfNo	1	0	Information number for binary channel 6 (IEC -60870-5-103)
INFNO7	0 - 255	InfNo	1	0	Information number for binary channel 7 (IEC -60870-5-103)
INFNO8	0 - 255	InfNo	1	0	Information number for binary channel 8 (IEC -60870-5-103)
INFNO9	0 - 255	InfNo	1	0	Information number for binary channel 9 (IEC -60870-5-103)
INFNO10	0 - 255	InfNo	1	0	Information number for binary channel 10 (IEC -60870-5-103)
INFNO11	0 - 255	InfNo	1	0	Information number for binary channel 11 (IEC -60870-5-103)
INFNO12	0 - 255	InfNo	1	0	Information number for binary channel 12 (IEC -60870-5-103)
INFNO13	0 - 255	InfNo	1	0	Information number for binary channel 13 (IEC -60870-5-103)
INFNO14	0 - 255	InfNo	1	0	Information number for binary channel 14 (IEC -60870-5-103)
INFNO15	0 - 255	InfNo	1	0	Information number for binary channel 15 (IEC -60870-5-103)
INFNO16	0 - 255	InfNo	1	0	Information number for binary channel 16 (IEC -60870-5-103)

3.13.7 Sequential of events

3.13.7.1 Application

From an overview perspective, continuous event-logging is a useful system monitoring instrument and is a complement to specific disturbance recorder functions.

The event list (EL), always included in the IED, logs all selected binary input signals connected to the Disturbance report function. The list may contain of up to 1000 time-tagged events stored in a ring-buffer where, if the buffer is full, the oldest event is overwritten when a new event is logged.

The difference between the event list (EL) and the event recorder (ER) function is that the list function continuously updates the log with time tagged events while the recorder function is an extract of events during the disturbance report time window.

The event list information is available in the IED via the local HMI or PCM600.

3.13.7.2 Setting guidelines

The setting parameters for the Event list function (EL) are a part of the Disturbance report settings.

It is possible to event handle up to 96 binary signals, either internal signals or signals from binary input channels. These signals are identical with the binary signals recorded by the disturbance recorder.

There is no dedicated setting for the EL function.

3.13.8 Indications

3.13.8.1 Application

Fast, condensed and reliable information about disturbances in the primary and/or in the secondary system is important. Binary signals that have changed status during a disturbance are an example of this. This information is used primarily in the short term (for example, immediate disturbance analysis, corrective actions) to get information via the local HMI in a straightforward way without any knowledge of how to handle the IED.

There are three LEDs on the local HMI (green, yellow and red), which will display status information about the IED (in service, internal failure, and so on) and the Disturbance report function (trigged).

The Indication function (IND), always included in the IED, shows all selected binary input signals connected to the Disturbance Report function that have been activated

during a disturbance. The status changes are logged during the entire recording time, which depends on the set of recording times (pre-, post-fault and limit time) and the actual fault time. The indications are not time-tagged.

The indication information is available for each of the recorded disturbances in the IED and the user may use the local HMI to view the information.

3.13.8.2 Setting guidelines

The setting parameters for LEDs and the Indication function (IND) are a part of the disturbance report settings.

Available signals are identical with the binary signals recorded by the disturbance report. It is possible to use all binary input signals for the Indication function on the local HMI, but it is not recommended since the general view will be lost. The intention is to point out some important signals, not to many, to be shown. If a more thorough analysis is to be done information from the event recorder should be used.

To be able to control the red LED in the local HMI:

SetLEDn: Set red LED on LMHI in front of the IED if binary input N changes status.

For the IND function there are a number dedicated settings:

IndicationMaN: Indication mask for binary input N. If set (*Show*), a status change of that particular input, will be fetched and shown on the local HMI. If not set (*Hide*), status change will not be indicated.

3.13.9 Event recorder

3.13.9.1 Application

Quick, complete and reliable information about disturbances in the primary and/or in the secondary system is vital, for example, time tagged events logged during disturbances. This information is used for different purposes in the short term, for example, disturbance analysis, corrective actions and in the long term, for example, disturbance analysis, statistics and maintenance, that is Functional Analysis).

The event recorder, always included in the IED, logs all selected binary input signals connected to the disturbance report function DRPRDRE. Each recording can contain up to 150 time-tagged events. The events are logged during the total recording time, which depends on the set of recording times (pre-, post-fault and limit time) and the actual fault time. During this time, the first 150 events for all 96 binary signals are logged and time-tagged.

The event recorder information is available for each of the recorded disturbances in the IED and the user may use the local HMI to get the information. The information is included in the disturbance recorder file, which may be uploaded to PCM600 and further analyzed using the Disturbance Handling tool.

The event recording information is an integrated part of the disturbance record (Comtrade file).

3.13.9.2 Setting guidelines

The setting parameters for the Event Recorder (ER) function are a part of the Disturbance Report settings.

It is possible to event handle up to 96 binary signals, either internal signals or signals from binary input channels. These signals are identical to the binary signals recorded by the disturbance report.

For the ER function there is no dedicated setting.

3.13.10 Trip value recorder

3.13.10.1 Application

Fast, complete and reliable information about disturbances such as fault currents and voltage faults in the power system is vital. This information is used for different purposes in the short perspective (for example, fault location, disturbance analysis, corrective actions) and the long term (for example, disturbance analysis, statistics and maintenance, that is Functional Analysis).

The trip value recorder (TVR), always included in the IED, calculates the values of all selected external analog input signals (channel 1-30) connected to the Disturbance Report function. The estimation is performed immediately after finalizing each recording and available in the disturbance report. The result is magnitude and phase angle before and during the fault for each analog input signal.

The information is used as input to the fault location function (FL), if included in the IED and in operation.

The trip value recorder (TVR) information is available for each of the recorded disturbances in the IED and the user may use the local HMI to get the information. The information is included in the disturbance recorder file, which can be uploaded to PCM600 and further analyzed using the Disturbance Handling tool.

3.13.10.2 Setting guidelines

The trip value recorder (TVR) setting parameters are a part of the disturbance report settings.

For the trip value recorder (TVR) there is one dedicated setting:

ZeroAngleRef: The parameter defines which analog signal to use as phase-angle reference for all other input signals. It is suggested to point out a sampled voltage input signal, for example a line or busbar phase voltage (channel 1-30).

3.13.11 Disturbance recorder

3.13.11.1 Application

The maximum number of recordings depend on each recordings total recording time. Long recording time will reduce the number of recordings to less than 100.

The IED flash disk should NOT be used to store any user files. This might cause disturbance recordings to be deleted due to lack of disk space.

To get fast, complete and reliable information about fault current, voltage, binary signal and other disturbances in the power system is very important. This is accomplished by the Disturbance Recorder function and facilitates a better understanding of the behavior of the power system and related primary and secondary equipment during and after a disturbance. An analysis of the recorded data provides valuable information that can be used to explain a disturbance, basis for change of IED setting plan, improvement of existing equipment, and so on. This information can also be used in a longer perspective when planning for and designing new installations, that is a disturbance recording could be a part of Functional Analysis (FA).

The Disturbance Recorder (DR), always included in the IED, acquires sampled data from all selected analog input and binary signals connected to the function blocks, that is maximum 30 external analog, 10 internal (derived) analog and 96 binary signals.

The function is characterized by great flexibility as far as configuration, starting conditions, recording times, and large storage capacity are concerned. Thus, the disturbance recorder is not dependent on the operation of protective functions, and it can record disturbances that were not discovered by protective functions.

The disturbance recorder information is saved for each of the recorded disturbances in the IED and the user may use the local HMI to get some general information about the

recordings. The disturbance recording information is included in the disturbance recorder files, which may be uploaded to PCM600 for further analysis using the Disturbance Handling tool. The information is also available on a station bus according to IEC 61850 and according to IEC 60870-5-103.

3.13.11.2 Setting guidelines

The setting parameters for the Disturbance Recorder function (DR) is a part of the Disturbance Report settings.

It is possible to handle up to 40 analog and 96 binary signals, either internal signals or signals coming from external inputs. The binary signals are identical with the signals recorded by the other functions in the Disturbance Report function, that is Event recorder (ER), Indication (IND) and Trip value recorder (TVR) function.

For the DR function there is one dedicated setting:

OperationM: Analog channel M is to be recorded by the disturbance recorder (*On*) or not (*Off*). Other disturbance report settings, such as *Operation* and *TrigLevel* for binary signals, will also influence the disturbance recorder.

3.14 Metering

3.14.1 Pulse-counter logic PCGGIO

Function description	IEC 61850 identification	IEC 60617 identification	ANSI/IEEE C37.2 device number
Pulse-counter logic	PCGGIO	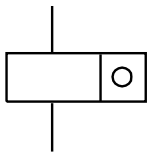	-

3.14.1.1 Setting parameters

Table 117: PCGGIO Non group settings (basic)

Name	Values (Range)	Unit	Step	Default	Description
Operation	Disabled Enabled	-	-	Disabled	Operation Enable/Disable
EventMask	NoEvents ReportEvents	-	-	NoEvents	Report mask for analog events from pulse counter
CountCriteria	Disabled RisingEdge Falling edge OnChange	-	-	RisingEdge	Pulse counter criteria
Scale	1.000 - 90000.000	-	0.001	1.000	Scaling value for SCAL_VAL output to unit per counted value
Quantity	Count ActivePower ApparentPower ReactivePower ActiveEnergy ApparentEnergy ReactiveEnergy	-	-	Count	Measured quantity for SCAL_VAL output
tReporting	0 - 3600	s	1	60	Cycle time for reporting of counter value

3.14.2 Function for energy calculation and demand handling ETPMMTR

Function description	IEC 61850 identification	IEC 60617 identification	ANSI/IEEE C37.2 device number
Energy calculation and demand handling	ETPMMTR		-

3.14.2.1 Application

Energy calculation and demand handling function ETPMMTR is intended for statistics of the forward and reverse active and reactive energy. It has a high accuracy basically given by the measurements function (CVMMXN). This function has a site calibration possibility to further increase the total accuracy.

The function is connected to the instantaneous outputs of (CVMMXN) as shown in figure 56.

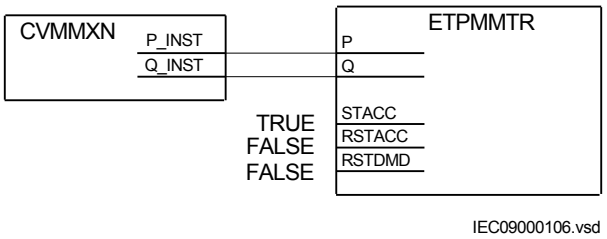

Figure 56: Connection of energy calculation and demand handling function ETPMMTR to the measurements function (CVMMXN)

The energy values can be read through communication in MWh and MVarh in monitoring tool of PCM600 and/or alternatively the values can be presented on the local HMI. The local HMI graphical display is configured with PCM600 Graphical display editor tool (GDE) with a measuring value which is selected to the active and reactive component as preferred. All four values can also be presented.

Maximum demand values are presented in MWh or MVarh in the same way.

Alternatively, the values can be presented with use of the pulse counters function (PCGGIO). The output values are scaled with the pulse output setting values *EAFAccPlsQty*, *EARAccPlsQty*, *ERFAccPlsQty* and *ERVAccPlsQty* of the energy metering function and then the pulse counter can be set-up to present the correct values by scaling in this function. Pulse counter values can then be presented on the local HMI in the same way and/or sent to the SA system through communication where the total energy then is calculated by summation of the energy pulses. This principle is good for very high values of energy as the saturation of numbers else will limit energy integration to about one year with 50 kV and 3000 A. After that the accumulation will start on zero again.

3.14.2.2 Setting guidelines

The parameters are set via the local HMI or PCM600.

The following settings can be done for the energy calculation and demand handling function ETPMMTR:

Operation: *Disabled*/*Enabled*

tEnergy: Time interval when energy is measured.

StartAcc: *Disabled*/*Enabled* is used to switch the accumulation of energy on and off.

The input signal STACC is used to start accumulation. Input signal STACC cannot be used to halt accumulation. The energy content is reset every time STACC is activated. STACC can for example, be used

when an external clock is used to switch two active energy measuring function blocks on and off to have indication of two tariffs.

tEnergyOnPls: gives the pulse length ON time of the pulse. It should be at least *100* ms when connected to the Pulse counter function block. Typical value can be *100* ms.

tEnergyOffPls: gives the OFF time between pulses. Typical value can be *100* ms.

EAFAccPlsQty and *EARAccPlsQty*: gives the MWh value in each pulse. It should be selected together with the setting of the Pulse counter (PCGGIO) settings to give the correct total pulse value.

ERFAccPlsQty and *ERVAccPlsQty* : gives the MVarh value in each pulse. It should be selected together with the setting of the Pulse counter (PCGGIO) settings to give the correct total pulse value.

For the advanced user there are a number of settings for direction, zero clamping, max limit, and so on. Normally, the default values are suitable for these parameters.

3.14.2.3 Setting parameters

Table 118: ETPMMTR Non group settings (basic)

Name	Values (Range)	Unit	Step	Default	Description
Operation	Disabled Enabled	-	-	Disabled	Operation Enable/Disable
StartAcc	Disabled Enabled	-	-	Disabled	Activate the accumulation of energy values
tEnergy	1 Minute 5 Minutes 10 Minutes 15 Minutes 30 Minutes 60 Minutes 180 Minutes	-	-	1 Minute	Time interval for energy calculation
tEnergyOnPls	0.000 - 60.000	s	0.001	1.000	Energy accumulated pulse ON time in secs
tEnergyOffPls	0.000 - 60.000	s	0.001	0.500	Energy accumulated pulse OFF time in secs
EAFAccPlsQty	0.001 - 10000.000	MWh	0.001	100.000	Pulse quantity for active forward accumulated energy value
EARAccPlsQty	0.001 - 10000.000	MWh	0.001	100.000	Pulse quantity for active reverse accumulated energy value
ERFAccPlsQty	0.001 - 10000.000	MVArh	0.001	100.000	Pulse quantity for reactive forward accumulated energy value
ERVAccPlsQty	0.001 - 10000.000	MVArh	0.001	100.000	Pulse quantity for reactive reverse accumulated energy value

Table 119: ETPMMTR Non group settings (advanced)

Name	Values (Range)	Unit	Step	Default	Description
EALim	0.001 - 10000000000.000	MWh	0.001	1000000.000	Active energy limit
ERLim	0.001 - 10000000000.000	MVArh	0.001	1000.000	Reactive energy limit
DirEnergyAct	Forward Reverse	-	-	Forward	Direction of active energy flow Forward/ Reverse
DirEnergyReac	Forward Reverse	-	-	Forward	Direction of reactive energy flow Forward/ Reverse
EnZeroClamp	Disabled Enabled	-	-	Enabled	Enable of zero point clamping detection function
LevZeroClampP	0.001 - 10000.000	MW	0.001	10.000	Zero point clamping level at active Power
LevZeroClampQ	0.001 - 10000.000	MVAr	0.001	10.000	Zero point clamping level at reactive Power
EAFPrestVal	0.000 - 10000.000	MWh	0.001	0.000	Preset Initial value for forward active energy
EARPrestVal	0.000 - 10000.000	MWh	0.001	0.000	Preset Initial value for reverse active energy
ERFPresetVal	0.000 - 10000.000	MVArh	0.001	0.000	Preset Initial value for forward reactive energy
ERVPresetVal	0.000 - 10000.000	MVArh	0.001	0.000	Preset Initial value for reverse reactive energy

Section 4 Station communication

About this chapter

This chapter describes the communication possibilities in a SA-system.

4.1 IEC 61850-8-1 communication protocol

4.1.1 Application IEC 61850-8-1

IEC 61850-8-1 communication protocol allows vertical communication to HSI clients and allows horizontal communication between two or more intelligent electronic devices (IEDs) from one or several vendors to exchange information and to use it in the performance of their functions and for correct co-operation.

GOOSE (Generic Object Oriented Substation Event), which is a part of IEC 61850–8–1 standard, allows the IEDs to communicate state and control information amongst themselves, using a publish-subscribe mechanism. That is, upon detecting an event, the IED(s) use a multi-cast transmission to notify those devices that have registered to receive the data. An IED can, by publishing a GOOSE message, report its status. It can also request a control action to be directed at any device in the network.

Figure 57 shows the topology of an IEC 61850–8–1 configuration. IEC 61850–8–1 specifies only the interface to the substation LAN. The LAN itself is left to the system integrator.

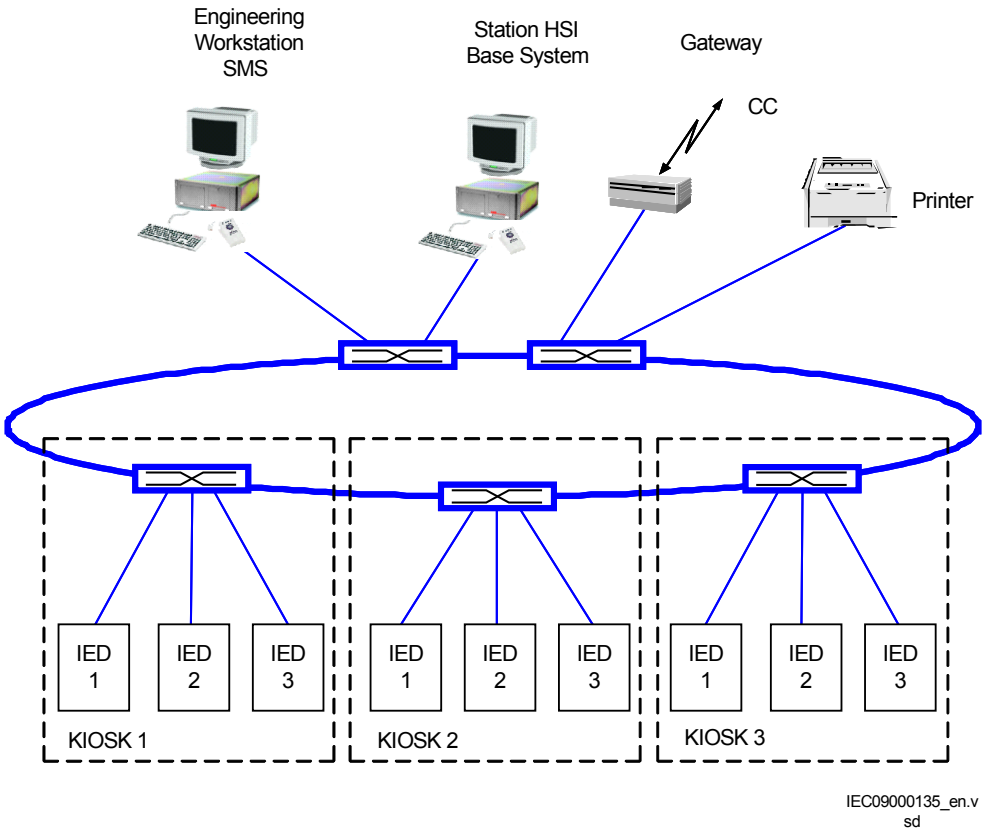

Figure 57: SA system with IEC 61850–8–1

Figure 58 shows the GOOSE peer-to-peer communication.

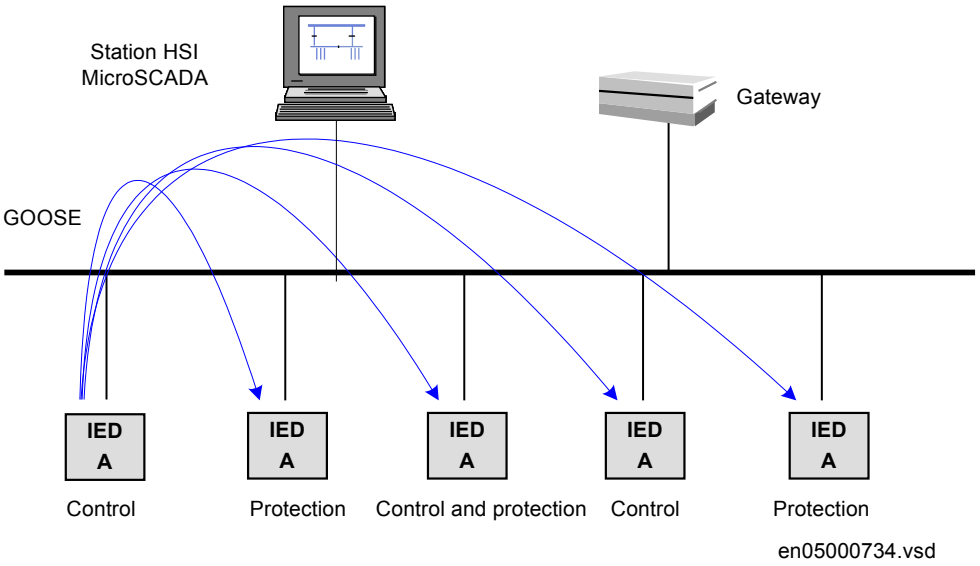

Figure 58: Example of a broadcasted GOOSE message

4.1.2 Setting guidelines

There are two settings related to the IEC 61850–8–1 protocol:

Operation User can set IEC 61850 communication to *Enabled* or *Disabled*.

GOOSE has to be set to the Ethernet link where GOOSE traffic shall be send and received.

4.1.3 Setting parameters

Table 120: IEC61850-8-1 Non group settings (basic)

Name	Values (Range)	Unit	Step	Default	Description
Operation	Off On	-	-	Off	Operation Off/On
GOOSE	Front OEM311_AB OEM311_CD	-	-	OEM311_AB	Port for GOOSE communication

Table 121: GOOSEBINRCV Non group settings (basic)

Name	Values (Range)	Unit	Step	Default	Description
Operation	Disabled Enabled	-	-	Disabled	Operation Disabled/Enabled

4.1.4 IEC 61850 generic communication I/O functions SPGGIO, SP16GGIO

4.1.4.1 Application

IEC 61850–8–1 generic communication I/O functions (SPGGIO) function is used to send one single logical output to other systems or equipment in the substation. It has one visible input, that should be connected in ACT tool.

4.1.4.2 Setting guidelines

There are no settings available for the user for SPGGIO. However, PCM600 must be used to get the signals sent by SPGGIO.

4.1.4.3 Setting parameters

The function does not have any parameters available in the local HMI or PCM600.

4.1.5 IEC 61850 generic communication I/O functions MVGGIO

4.1.5.1 Application

IEC61850 generic communication I/O functions (MVGGIO) function is used to send the instantaneous value of an analog signal to other systems or equipment in the substation. It can also be used inside the same IED, to attach a RANGE aspect to an analog value and to permit measurement supervision on that value.

4.1.5.2 Setting guidelines

The settings available for IEC61850 generic communication I/O functions (MVGGIO) function allows the user to choose a deadband and a zero deadband for the monitored signal. Values within the zero deadband are considered as zero.

The high and low limit settings provides limits for the high-high-, high, normal, low and low-low ranges of the measured value. The actual range of the measured value is shown on the range output of MVGGIO function block. When a Measured value expander block (RANGE_XP) is connected to the range output, the logical outputs of the RANGE_XP are changed accordingly.

4.1.5.3 Setting parameters

Table 122: MVGGIO Non group settings (basic)

Name	Values (Range)	Unit	Step	Default	Description
MV db	1 - 300	Type	1	10	Cycl: Report interval (s), Db: In % of range, Int Db: In %s
MV zeroDb	0 - 100000	m%	1	500	Zero point clamping in 0.001% of range
MV hhLim	-10000000000.000 - 10000000000.000	-	0.001	90.000	High High limit
MV hLim	-10000000000.000 - 10000000000.000	-	0.001	80.000	High limit
MV lLim	-10000000000.000 - 10000000000.000	-	0.001	-80.000	Low limit
MV llLim	-10000000000.000 - 10000000000.000	-	0.001	-90.000	Low Low limit
MV min	-10000000000.000 - 10000000000.000	-	0.001	-100.000	Minimum value
MV max	-10000000000.000 - 10000000000.000	-	0.001	100.000	Maximum value
MV dbType	Cyclic Dead band Int deadband	-	-	Dead band	Reporting type
MV limHys	0.000 - 100.000	%	0.001	5.000	Hysteresis value in % of range (common for all limits)

4.1.6 IEC 61850-8-1 redundant station bus communication

Function description	IEC 61850 identification	IEC 60617 identification	ANSI/IEEE C37.2 device number
Parallel Redundancy Protocol Status	PRPSTATUS	-	-
Duo driver configuration	DUODRV	-	-

4.1.6.1 Application

Parallel redundancy protocol status (PRPSTATUS) together with Duo driver configuration (DUODRV) are used to supervise and assure redundant Ethernet communication over two channels. This will secure data transfer even though one communication channel might not be available for some reason. Together PRPSTATUS and DUODRV provide redundant communication over station bus running IEC 61850-8-1 protocol. The redundant communication use both port AB and CD on OEM module.

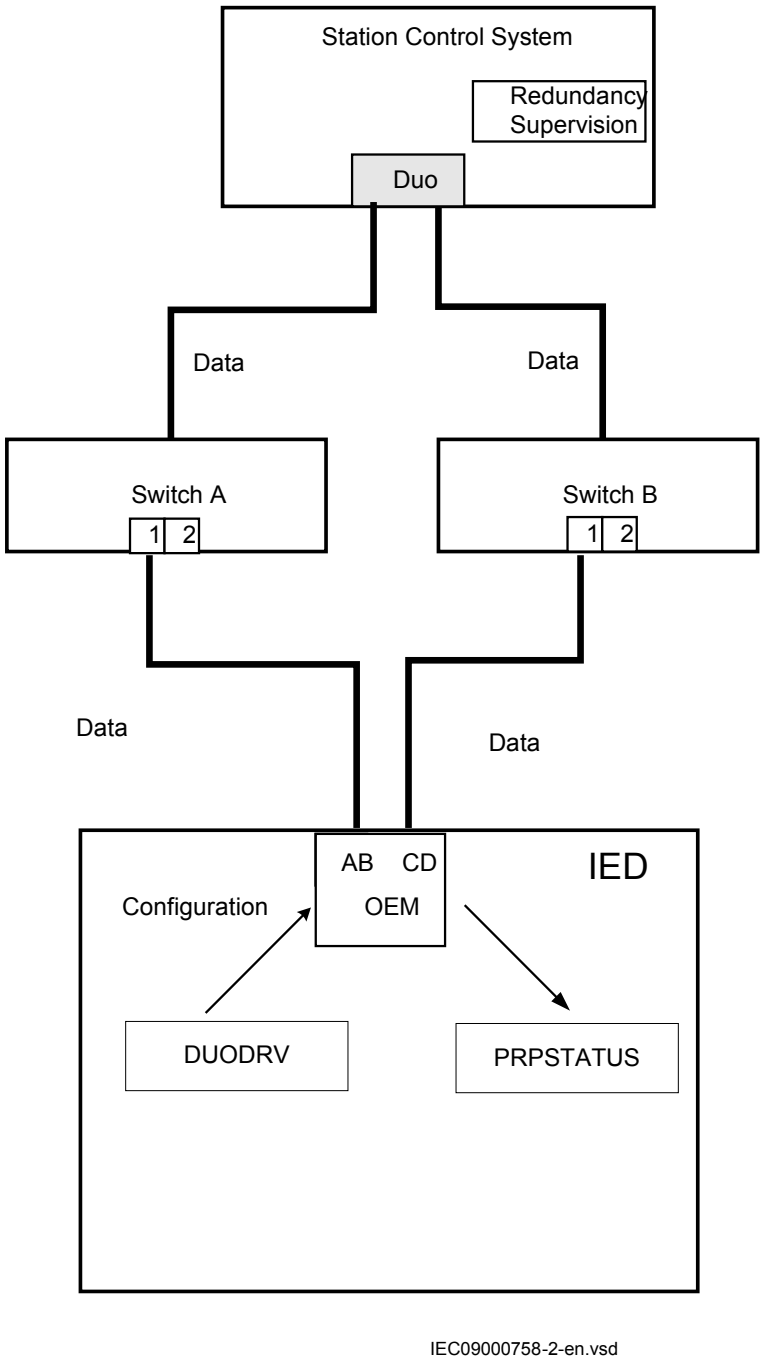

Figure 59: Redundant station bus

4.1.6.2 Setting guidelines

Redundant communication (DUODRV) is configured in the local HMI under **Main menu/Settings/General settings/Communication/Ethernet configuration/Rear OEM - Redundant PRP**

The settings can then be viewed, but not set, in the Parameter Setting tool in PCM600 under **Main menu/IED Configuration/Communication/Ethernet configuration/ DUODRV**:

Operation: The redundant communication will be activated when this parameter is set to *On.*After confirmation the IED will restart and the setting alternatives *Rear OEM - Port AB* and *CD* will not be further displayed in the local HMI. The *ETHLANAB* and *ETHLANCD* in the Parameter Setting Tool are irrelevant when the redundant communication is activated, only DUODRV IPAdress and IPMask are valid.

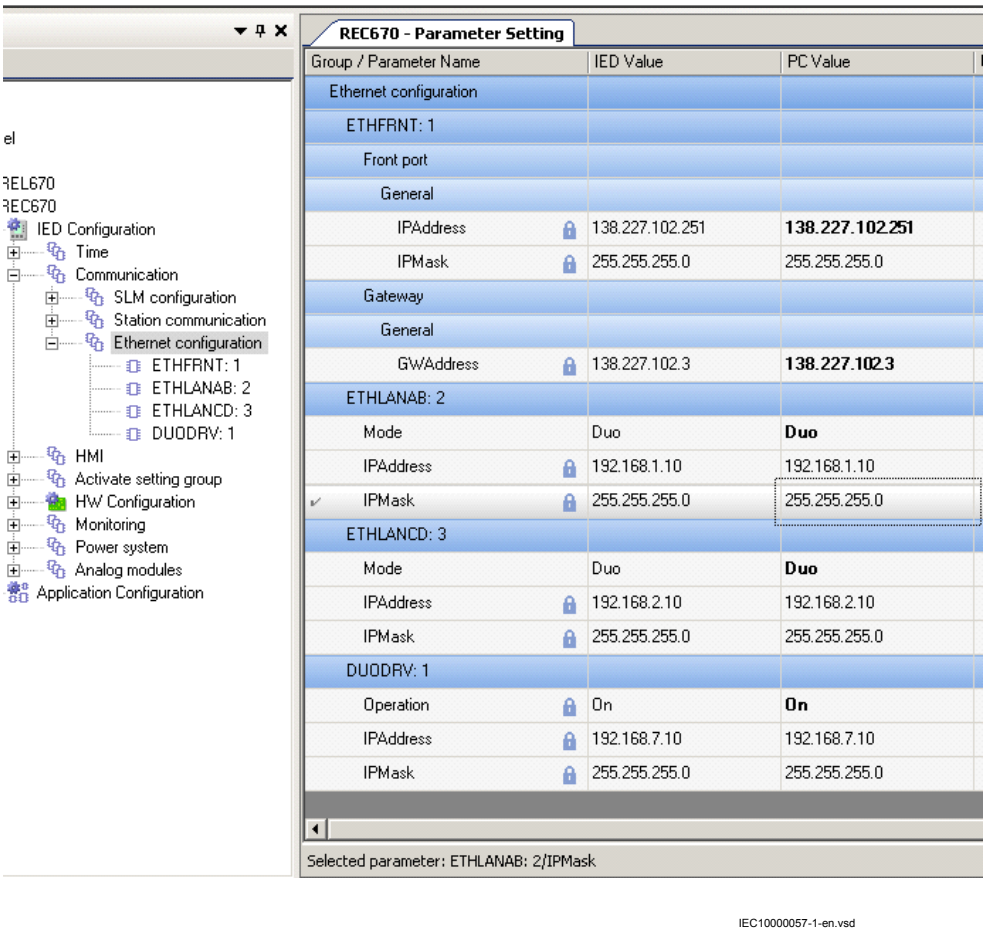

Figure 60: PST screen: DUODRV Operation is set to On, which affect Rear OEM - Port AB and CD which are both set to Duo

4.1.6.3 Setting parameters

Table 123: DUODRV Non group settings (basic)

Name	Values (Range)	Unit	Step	Default	Description
Operation	Disabled Enabled	-	-	Disabled	Disable/Enable Operation
IPAddress	0 - 18	IP Address	1	192.168.7.10	IP-Address
IPMask	0 - 18	IP Address	1	255.255.255.0	IP-Mask

4.2 Multiple command and transmit MULTICMDRCV, MULTICMDSND

Function description	IEC 61850 identification	IEC 60617 identification	ANSI/IEEE C37.2 device number
Multiple command and transmit	MULTICMDRCV	-	-
Multiple command and transmit	MULTICMDSND	-	-

4.2.1 Application

The IED can be provided with a function to send and receive signals to and from other IEDs via the interbay bus. The send and receive function blocks has 16 outputs/inputs that can be used, together with the configuration logic circuits, for control purposes within the IED or via binary outputs. When it is used to communicate with other IEDs, these IEDs have a corresponding Multiple transmit function block with 16 outputs to send the information received by the command block.

4.2.2 Setting guidelines

4.2.2.1 Settings

The parameters for the multiple command function are set via PCM600.

The *Mode* setting sets the outputs to either a *Steady* or *Pulsed* mode.

4.2.3 Setting parameters

Table 124: MULTICMDRCV Non group settings (basic)

Name	Values (Range)	Unit	Step	Default	Description
tMaxCycleTime	0.050 - 200.000	s	0.001	11.000	Maximum cycle time between receptions of input data
tMinCycleTime	0.000 - 200.000	s	0.001	0.000	Minimum cycle time between receptions of input data
Mode	Steady Pulsed	-	-	Steady	Mode for output signals
tPulseTime	0.000 - 60.000	s	0.001	0.200	Pulse length for multi command outputs

Table 125: MULTICMDSND Non group settings (basic)

Name	Values (Range)	Unit	Step	Default	Description
tMaxCycleTime	0.000 - 200.000	s	0.001	5.000	Maximum time interval between transmission of output data
tMinCycleTime	0.000 - 200.000	s	0.001	0.000	Minimum time interval between transmission of output data

Section 5 Configuration

About this chapter

This chapter describes the IED configurations.

5.1 Description of configuration RES670

5.1.1 Introduction

5.1.1.1 Description of A20A configuration

RES670 A20A configuration is applicable for a typical single busbar single breaker arrangement monitoring up to three bays on the busbar. RES670 A20A is delivered in 1/1 and 1/2 of 19" case size. Thus only 12 analog inputs are available. As shown in figure 61, RES670 A20A configuration as a PMU is capable of reporting 4 synchronized phasors; that is, one 3-phase voltage of the busbar and three 3-phase currents of bays 1 to 3. In addition, there are Binary Inputs and protection function triggers which are reported through PMU. This configuration also includes general back-up protection functions which are mainly intended for alarm purposes. Available functions on A20A are Over Voltage, Under Voltage, Over Frequency, Under Frequency, and Rate of Change of Frequency.

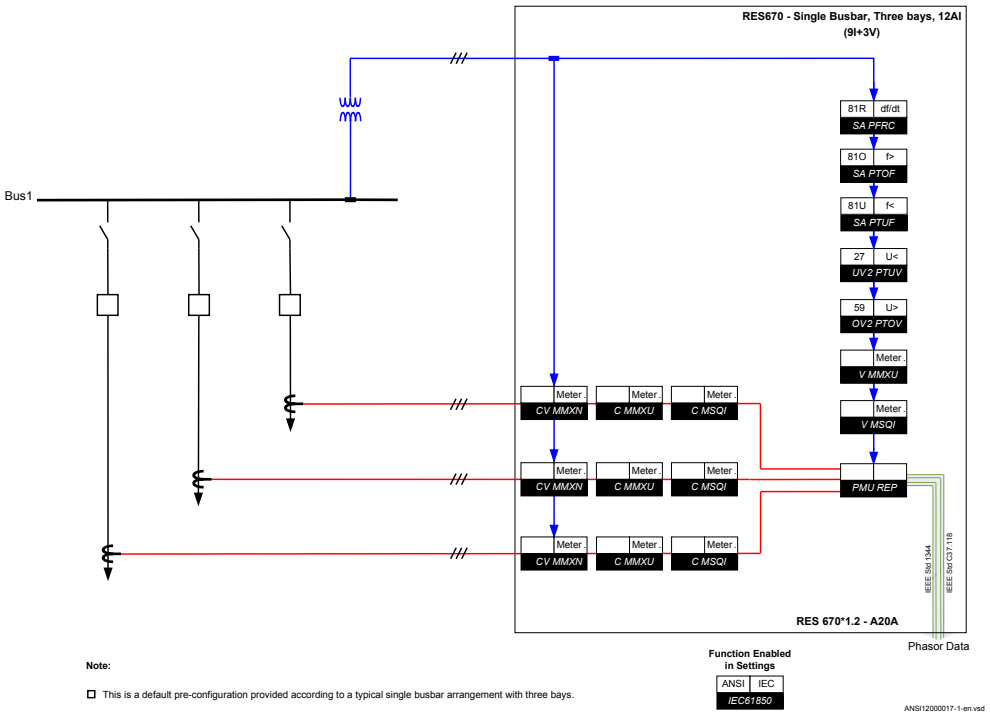

Figure 61: Typical PMU application for single busbar single breaker arrangement monitoring up to three bays, including synchronized phasor reporting and back-up protection, using 12 analog input transformers in full 19" case size.

RES670 A20A function library includes additional functions, which are not configured, such as additional Overcurrent protection functions, additional Multipurpose protection function, and so on. Note that RES670 A20A must be re-configured if any additional functions are used.

The following tables illustrate the external connections for the Analog Inputs, Binary Inputs, and Binary Outputs for the configurations RES670 A20A.

Table 126: Analog Input Module, Slot p31, Connector X401

TRM channel No.		Terminal No. X401:	Polarity	RES670-A20A connected analog inputs
1		1	I+	BAY1_IA
		2	-	
2		3	I+	BAY1_IB
		4	-	
Table continues on next page				

TRM channel No.		Terminal No. X401:	Polarity	RES670-A20A connected analog inputs
3		5	I+	BAY1_IC
		6	-	
4		7	I+	BAY2_IA
		8	-	
5		9	I+	BAY2_IB
		10	-	
6		11	I+	BAY2_IC
		12	-	
7		13	I+	BAY3_IA
		14	-	
8		15	I+	BAY3_IB
		16	-	
9		17	I+	BAY3_IC
		18	-	
10		19	V+	BUS1_VA
		20	-	
11		21	V+	BUS2_VB
		22	-	
12		23	V+	BUS3_VC
		24	-	

Table 127: Binary Input Module, Slot p3, Connector X31

BIM channel No.		Terminal No. X31:	Polarity	RES670-A20A connected binary inputs
1	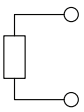	1	+	TEST_MODE_ACT
		2	-	
2	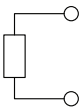	3	+	B1_VTMCB_OPEN
		4	-	
Table continues on next page				

BIM channel No.		Terminal No. X31:	Polarity	RES670-A20A connected binary inputs
3	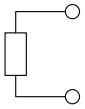	5	+	Not used
		6	-	
4	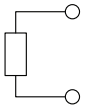	7	+	RESET_LEDs
		8	-	
5	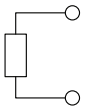	9	+	ACTIVATE_GRP1
		10	-	
6	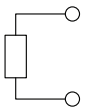	11	+	ACTIVATE_GRP2
		12	-	
7	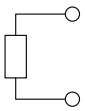	13	+	CHANGE_LOCK
		14	-	
8	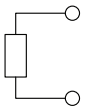	15	+	PMUREPORT_BI7
		16	-	

Table 128: Binary Input Module, Slot p3, Connector X32

BIM channel No.		Terminal No. X32:	Polarity	RES670-A20A connected binary inputs
9	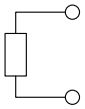	17	+	PMUREPORT_BI8
		18	-	
10	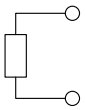	19	+	Not used
		20	-	
11	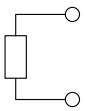	21	+	Not used
		22	-	
12	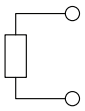	23	+	Not used
		24	-	
Table continues on next page				

BIM channel No.		Terminal No. X32:	Polarity	RES670-A20A connected binary inputs
13	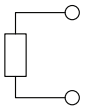	25	+	Not used
		26	-	
14	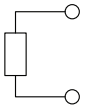	27	+	Not used
		28	-	
15	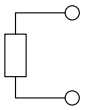	29	+	Not used
		30	-	
16	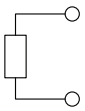	31	+	Not used
		32	-	

Table 129: Binary Output Module, Slot p5, Connector X51

BOM channel no.		Terminal no. X51:	Polarity	RES670-A20A connected binary outputs
1		1		Time Synchronization OK (TIME_SYNCH_OK)
		2	+	
2		3		Communication Connection OK (COM_CON_OK)
3		4		Bus1 Over Voltage Alarm (BUS1_OV_ALARM)
		5	+	
4		6		Bus1 Under Voltage Alarm (BUS1_UV_ALARM)
5		7		Bus1 Over Frequency Alarm (BUS1_OF_ALARM)
		8	+	
6		9		Bus1 Under Frequency Alarm (BUS1_UF_ALARM)
7		10		Bus1 Rate of Change of Frequency Alarm (BUS1_FRC_ALRM)
		11	+	
8		12		Not used
Table continues on next page				

BOM channel no.		Terminal no. X51:	Polarity	RES670-A20A connected binary outputs
9		13		Not used
		14	+	
10		15		Not used
11		16		Not used
		17	+	
12		18		Not used

Table 130: Binary Output Module, Slot p5, Connector X52

BOM channel no.		Terminal no. X51:	Polarity	RES670-A20A connected binary outputs
13		1		Not used
		2	+	
14		3		Not used
15		4		Not used
		5	+	
16		6		Not used
17		7		Not used
		8	+	
18		9		Not used
19		10		Not used
		11	+	
20		12		Not used
21		13		Not used
		14	+	
22		15		Not used
23		16		Not used
		17	+	
24		18		Not used

5.1.1.2 Description of configuration B20A

RES670 B20A configuration is applicable for a typical double busbar single breaker arrangement monitoring up to six bays on the busbar. RES670 B20A is always delivered in 1/1 of 19" case size. Thus 24 analog inputs are available. As shown in figure 62, RES670 B20A configuration as a PMU is capable of reporting 8

synchronized phasors; that is, two 3-phase voltages from busbar 1 and 2 as well as six 3-phase currents from bays 1 to 6. In addition, there are Binary Inputs and protection function triggers which are reported through PMU. This configuration also includes general back-up protection functions which are mainly intended for alarm purposes. Available functions on B20A are Over Voltage, Under Voltage, Over Frequency, Under Frequency, and Rate of Change of Frequency.

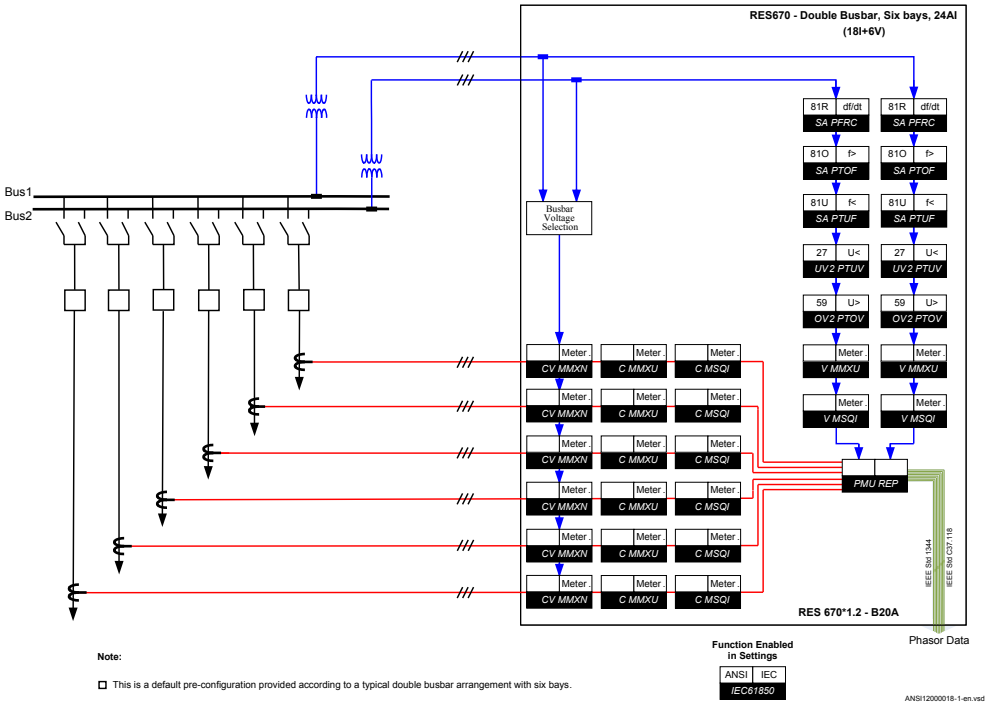

Figure 62: Typical PMU application for double busbar single breaker arrangement monitoring up to 6 bays, including synchronized phasor reporting and back-up protection, using 24 Analog Input transformers in full 19" case size.

As shown in figure 62, in order to provide proper busbar voltage for ServiceValues (CV MMXN Blocks), the Busbar Voltage Selection logic has been implemented in RES670 B20A.

RES670 B20A function library includes additional functions, which are not configured, such as additional Overcurrent protection functions, additional Multipurpose protection function, and so on. Note that RES670 B20A must be re-configured if any additional functions are used.

The following tables illustrate the external connections for the Analog Inputs, Binary Inputs, and Binary Outputs for the configurations B20A.

Table 131: Analog Input Module, Slot p31, Connector X401

TRM channel No.		Terminal No. X401:	Polarity	RES670-B20A connected analog inputs
1		1	I+	BAY1_IA
		2	-	
2		3	I+	BAY1_IB
		4	-	
3		5	I+	BAY1_IC
		6	-	
4		7	I+	BAY2_IA
		8	-	
5		9	I+	BAY2_IB
		10	-	
6		11	I+	BAY2_IC
		12	-	
7		13	I+	BAY3_IA
		14	-	
8		15	I+	BAY3_IB
		16	-	
9		17	I+	BAY3_IC
		18	-	
10		19	V+	BUS1_VA
		20	-	
11		21	V+	BUS1_VB
		22	-	
12		23	V+	BUS1_VC
		24	-	

Table 132: Analog Input Module, Slot p32, Connector X411

TRM channel No.		Terminal No. X411:	Polarity	RES670-B20A connected analog inputs
1		1	I+	BAY4_IA
		2	-	
2		3	I+	BAY4_IB
		4	-	
3		5	I+	BAY4_IC
		6	-	
4		7	I+	BAY5_IA
		8	-	
5		9	I+	BAY5_IB
		10	-	
6		11	I+	BAY5_IC
		12	-	
7		13	I+	BAY6_IA
		14	-	
8		15	I+	BAY6_IB
		16	-	
9		17	I+	BAY6_IC
		18	-	
10		19	V+	BUS2_VA
		20	-	
11		21	V+	BUS2_VB
		22	-	
12		23	V+	BUS2_VC
		24	-	

Table 133: Binary Input Module, Slot p3, Connector X31

BIM channel No.		Terminal No. X31:	Polarity	RES670-B20A connected binary inputs
1	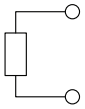	1	+	TEST_MODE_ACT
		2	-	
2	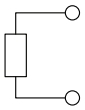	3	+	B1_VTMCB_OPEN
		4	-	
3	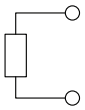	5	+	B2_VTMCB_OPEN
		6	-	
4	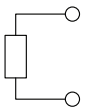	7	+	RESET_LEDs
		8	-	
5	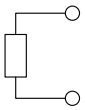	9	+	ACTIVATE_GRP1
		10	-	
6	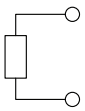	11	+	ACTIVATE_GRP2
		12	-	
7	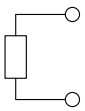	13	+	CHANGE_LOCK
		14	-	
8	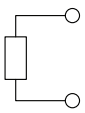	15	+	PMUREPORT_BI7
		16	-	

Table 134: Binary Input Module, Slot p3, Connector X32

BIM channel No.		Terminal No. X32:	Polarity	RES670-B20A connected binary inputs
9	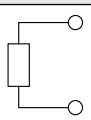	17	+	PMUREPORT_BI8
		18	-	
10	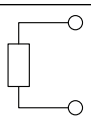	19	+	Not used
		20	-	

Table continues on next page

BIM channel No.		Terminal No. X32:	Polarity	RES670-B20A connected binary inputs
11	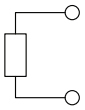	21	+	Not used
		22	-	
12	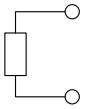	23	+	Not used
		24	-	
13	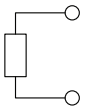	25	+	Not used
		26	-	
14	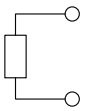	27	+	Not used
		28	-	
15	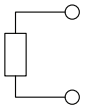	29	+	Not used
		30	-	
16	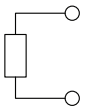	31	+	Not used
		32	-	

Table 135: Binary Output Module, Slot p5, Connector X51

BOM channel no.		Terminal no. X51:	Polarity	RES670-B20A connected binary outputs
1		1		Time Synchronization OK (TIME_SYNCH_OK)
		2	+	
2		3		Communication Connection OK (COM_CON_OK)
3		4		Bus1 Over Voltage Alarm (BUS1_OV_ALARM)
		5	+	
4		6		Bus1 Under Voltage Alarm (BUS1_UV_ALARM)
5		7		Bus1 Over Frequency Alarm (BUS1_OF_ALARM)
		8	+	
6		9		Bus1 Under Frequency Alarm (BUS1_UF_ALARM)

Table continues on next page

BOM channel no.		Terminal no. X51:	Polarity	RES670-B20A connected binary outputs
7		10		Bus1 Rate of Change of Frequency Alarm (BUS1_FRC_ALRM)
		11	+	
8		12		Not used
9		13		Bus2 Over Voltage Alarm (BUS2_OV_ALARM)
		14	+	
10		15		Bus2 Under Voltage Alarm (BUS2_UV_ALARM)
11		16		Bus2 Over Frequency Alarm (BUS2_OF_ALARM)
		17	+	
12		18		Bus2 Under Frequency Alarm (BUS2_UF_ALARM)

Table 136: Binary Output Module, Slot p5, Connector X52

BOM channel no.		Terminal no. X52:	Polarity	RES670-B20A connected binary outputs
13		1		Bus2 Rate of Change of Frequency Alarm (BUS2_FRC_ALRM)
		2	+	
14		3		Not used
15		4		Not used
		5	+	
16		6		Not used
17		7		Not used
		8	+	
18		9		Not used
19		10		Not used
		11	+	
20		12		Not used
21	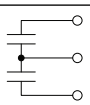	13		Not used
		14	+	
22		15		Not used
23	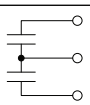	16		Not used
		17	+	
24		18		Not used

Section 6 Glossary

About this chapter

This chapter contains a glossary with terms, acronyms and abbreviations used in ABB technical documentation.

AC	Alternating current
ACT	Application configuration tool within PCM600
A/D converter	Analog-to-digital converter
ADBS	Amplitude deadband supervision
ADM	Analog digital conversion module, with time synchronization
AI	Analog input
ANSI	American National Standards Institute
AR	Autoreclosing
AngNegRes	Setting parameter/ZD/
ArgDirAngDir	Setting parameter/ZD/
ASCT	Auxiliary summation current transformer
ASD	Adaptive signal detection
AWG	American Wire Gauge standard
BBP	Busbar protection
BFP	Breaker failure protection
BI	Binary input
BIM	Binary input module
BOM	Binary output module
BOS	Binary outputs status
BR	External bistable relay
BS	British Standards
BSR	Binary signal transfer function, receiver blocks
BST	Binary signal transfer function, transmit blocks
C37.94	IEEE/ANSI protocol used when sending binary signals between IEDs

CAN	Controller Area Network. ISO standard (ISO 11898) for serial communication
CB	Circuit breaker
CBM	Combined backplane module
CCITT	Consultative Committee for International Telegraph and Telephony. A United Nations-sponsored standards body within the International Telecommunications Union.
CCM	CAN carrier module
CCVT	Capacitive Coupled Voltage Transformer
Class C	Protection Current Transformer class as per IEEE/ ANSI
CMPPS	Combined megapulses per second
CMT	Communication Management tool in PCM600
CO cycle	Close-open cycle
Codirectional	Way of transmitting G.703 over a balanced line. Involves two twisted pairs making it possible to transmit information in both directions
COMTRADE	Standard Common Format for Transient Data Exchange format for Disturbance recorder according to IEEE/ANSI C37.111, 1999 / IEC60255-24
Contra-directional	Way of transmitting G.703 over a balanced line. Involves four twisted pairs, two of which are used for transmitting data in both directions and two for transmitting clock signals
CPU	Central processor unit
CR	Carrier receive
CRC	Cyclic redundancy check
CROB	Control relay output block
CS	Carrier send
CT	Current transformer
CVT or CCVT	Capacitive voltage transformer
DAR	Delayed autoreclosing
DARPA	Defense Advanced Research Projects Agency (The US developer of the TCP/IP protocol etc.)
DBDL	Dead bus dead line
DBLL	Dead bus live line
DC	Direct current

DFC	Data flow control
DFT	Discrete Fourier transform
DHCP	Dynamic Host Configuration Protocol
DIP-switch	Small switch mounted on a printed circuit board
DI	Digital input
DLLB	Dead line live bus
DNP	Distributed Network Protocol as per IEEE Std 1815-2012
DR	Disturbance recorder
DRAM	Dynamic random access memory
DRH	Disturbance report handler
DSP	Digital signal processor
DTT	Direct transfer trip scheme
EHV network	Extra high voltage network
EIA	Electronic Industries Association
EMC	Electromagnetic compatibility
EMF	(Electromotive force)
EMI	Electromagnetic interference
EnFP	End fault protection
EPA	Enhanced performance architecture
ESD	Electrostatic discharge
FCB	Flow control bit; Frame count bit
FOX 20	Modular 20 channel telecommunication system for speech, data and protection signals
FOX 512/515	Access multiplexer
FOX 6Plus	Compact time-division multiplexer for the transmission of up to seven duplex channels of digital data over optical fibers
G.703	Electrical and functional description for digital lines used by local telephone companies. Can be transported over balanced and unbalanced lines
GCM	Communication interface module with carrier of GPS receiver module
GDE	Graphical display editor within PCM600
GI	General interrogation command

GIS	Gas-insulated switchgear
GOOSE	Generic object-oriented substation event
GPS	Global positioning system
GSAL	Generic security application
GTM	GPS Time Module
HDLC protocol	High-level data link control, protocol based on the HDLC standard
HFBR connector type	Plastic fiber connector
HMI	Human-machine interface
HSAR	High speed autoreclosing
HV	High-voltage
HVDC	High-voltage direct current
IDBS	Integrating deadband supervision
IEC	International Electrical Committee
IEC 60044-6	IEC Standard, Instrument transformers – Part 6: Requirements for protective current transformers for transient performance
IEC 60870-5-103	Communication standard for protective equipment. A serial master/slave protocol for point-to-point communication
IEC 61850	Substation automation communication standard
IEC 61850–8–1	Communication protocol standard
IEEE	Institute of Electrical and Electronics Engineers
IEEE 802.12	A network technology standard that provides 100 Mbits/s on twisted-pair or optical fiber cable
IEEE P1386.1	PCI Mezzanine Card (PMC) standard for local bus modules. References the CMC (IEEE P1386, also known as Common Mezzanine Card) standard for the mechanics and the PCI specifications from the PCI SIG (Special Interest Group) for the electrical EMF (Electromotive force).
IEEE 1686	Standard for Substation Intelligent Electronic Devices (IEDs) Cyber Security Capabilities
IED	Intelligent electronic device
I-GIS	Intelligent gas-insulated switchgear
IOM	Binary input/output module
Instance	When several occurrences of the same function are available in the IED, they are referred to as instances of that function.

	One instance of a function is identical to another of the same kind but has a different number in the IED user interfaces. The word "instance" is sometimes defined as an item of information that is representative of a type. In the same way an instance of a function in the IED is representative of a type of function.
IP	1. Internet protocol. The network layer for the TCP/IP protocol suite widely used on Ethernet networks. IP is a connectionless, best-effort packet-switching protocol. It provides packet routing, fragmentation and reassembly through the data link layer. 2. Ingression protection, according to IEC standard
IP 20	Ingression protection, according to IEC standard, level IP20- Protected against solidforeign objects of12.5mm diameter andgreater.
IP 40	Ingression protection, according to IEC standard, level IP40-Protected against solid foreign objects of 1mm diameter and greater.
IP 54	Ingression protection, according to IEC standard, level IP54-Dust-protected,protected againstsplashing water.
IRF	Internal failure signal
IRIG-B:	InterRange Instrumentation Group Time code format B, standard 200
ITU	International Telecommunications Union
LAN	Local area network
LIB 520	High-voltage software module
LCD	Liquid crystal display
LDCM	Line differential communication module
LDD	Local detection device
LED	Light-emitting diode
LNT	LON network tool
LON	Local operating network
MCB	Miniature circuit breaker
MCM	Mezzanine carrier module
MIM	Milli-ampere module
MPM	Main processing module

MVB	Multifunction vehicle bus. Standardized serial bus originally developed for use in trains.
NCC	National Control Centre
NUM	Numerical module
OCO cycle	Open-close-open cycle
OCP	Overcurrent protection
OEM	Optical ethernet module
OLTC	On-load tap changer
OV	Over-voltage
Overreach	A term used to describe how the relay behaves during a fault condition. For example, a distance relay is overreaching when the impedance presented to it is smaller than the apparent impedance to the fault applied to the balance point, that is, the set reach. The relay “sees” the fault but perhaps it should not have seen it.
PCI	Peripheral component interconnect, a local data bus
PCM	Pulse code modulation
PCM600	Protection and control IED manager
PC-MIP	Mezzanine card standard
PMC	PCI Mezzanine card
POR	Permissive overreach
POTT	Permissive overreach transfer trip
Process bus	Bus or LAN used at the process level, that is, in near proximity to the measured and/or controlled components
PSM	Power supply module
PST	Parameter setting tool within PCM600
PT ratio	Potential transformer or voltage transformer ratio
PUTT	Permissive underreach transfer trip
RASC	Synchrocheck relay, COMBIFLEX
RCA	Relay characteristic angle
RFPP	Resistance for phase-to-phase faults
	Resistance for phase-to-ground faults
RISC	Reduced instruction set computer
RMS value	Root mean square value

RS422	A balanced serial interface for the transmission of digital data in point-to-point connections
RS485	Serial link according to EIA standard RS485
RTC	Real-time clock
RTU	Remote terminal unit
SA	Substation Automation
SBO	Select-before-operate
SC	Switch or push button to close
SCS	Station control system
SCADA	Supervision, control and data acquisition
SCT	System configuration tool according to standard IEC 61850
SDU	Service data unit
SLM	Serial communication module. Used for SPA/LON/IEC/ DNP3 communication.
SMA connector	Subminiature version A, A threaded connector with constant impedance.
SMT	Signal matrix tool within PCM600
SMS	Station monitoring system
SNTP	Simple network time protocol – is used to synchronize computer clocks on local area networks. This reduces the requirement to have accurate hardware clocks in every embedded system in a network. Each embedded node can instead synchronize with a remote clock, providing the required accuracy.
SPA	Strömberg protection acquisition, a serial master/slave protocol for point-to-point communication
SRY	Switch for CB ready condition
ST	Switch or push button to trip
Starpoint	Neutral/Wye point of transformer or generator
SVC	Static VAr compensation
TC	Trip coil
TCS	Trip circuit supervision
TCP	Transmission control protocol. The most common transport layer protocol used on Ethernet and the Internet.

TCP/IP	Transmission control protocol over Internet Protocol. The de facto standard Ethernet protocols incorporated into 4.2BSD Unix. TCP/IP was developed by DARPA for Internet working and encompasses both network layer and transport layer protocols. While TCP and IP specify two protocols at specific protocol layers, TCP/IP is often used to refer to the entire US Department of Defense protocol suite based upon these, including Telnet, FTP, UDP and RDP.
TEF	Time delayed gound-fault protection function
TNC connector	Threaded Neill-Concelman, a threaded constant impedance version of a BNC connector
TPZ, TPY, TPX, TPS	Current transformer class according to IEC
UMT	User management tool
Underreach	A term used to describe how the relay behaves during a fault condition. For example, a distance relay is underreaching when the impedance presented to it is greater than the apparent impedance to the fault applied to the balance point, that is, the set reach. The relay does not “see” the fault but perhaps it should have seen it. See also Overreach.
UTC	Coordinated Universal Time. A coordinated time scale, maintained by the Bureau International des Poids et Mesures (BIPM), which forms the basis of a coordinated dissemination of standard frequencies and time signals. UTC is derived from International Atomic Time (TAI) by the addition of a whole number of "leap seconds" to synchronize it with Universal Time 1 (UT1), thus allowing for the eccentricity of the Earth's orbit, the rotational axis tilt (23.5 degrees), but still showing the Earth's irregular rotation, on which UT1 is based. The Coordinated Universal Time is expressed using a 24-hour clock, and uses the Gregorian calendar. It is used for aeroplane and ship navigation, where it is also sometimes known by the military name, "Zulu time." "Zulu" in the phonetic alphabet stands for "Z", which stands for longitude zero.
UV	Undervoltage
WEI	Weak end infeed logic
VT	Voltage transformer
X.21	A digital signalling interface primarily used for telecom equipment

$3I_O$	Three times zero-sequence current. Often referred to as the residual or the -fault current
$3V_O$	Three times the zero sequence voltage. Often referred to as the residual voltage or the neutral point voltage

Contact us

ABB Inc.
1021 Main Campus Drive
Raleigh, NC 27606, USA
Phone Toll Free: 1-800-HELP-365, menu option #8

ABB Inc.
3450 Harvester Road
Burlington, ON L7N 3W5, Canada
Phone Toll Free: 1-800-HELP-365, menu option #8

ABB Mexico S.A. de C.V.
Paseo de las Americas No. 31 Lomas Verdes 3a secc.
53125, Naucalpan, Estado De Mexico, MEXICO
Phone (+1) 440-585-7804, menu option #8

1MRK511253-UUS B © Copyright 2012 ABB. All rights reserved.

Power and productivity for a better world™