ABB

AG03-3005E

March 1990

ABB Relays

Directional Comparison Ground Fault Protection

Application Guide

Solweig Mahrs

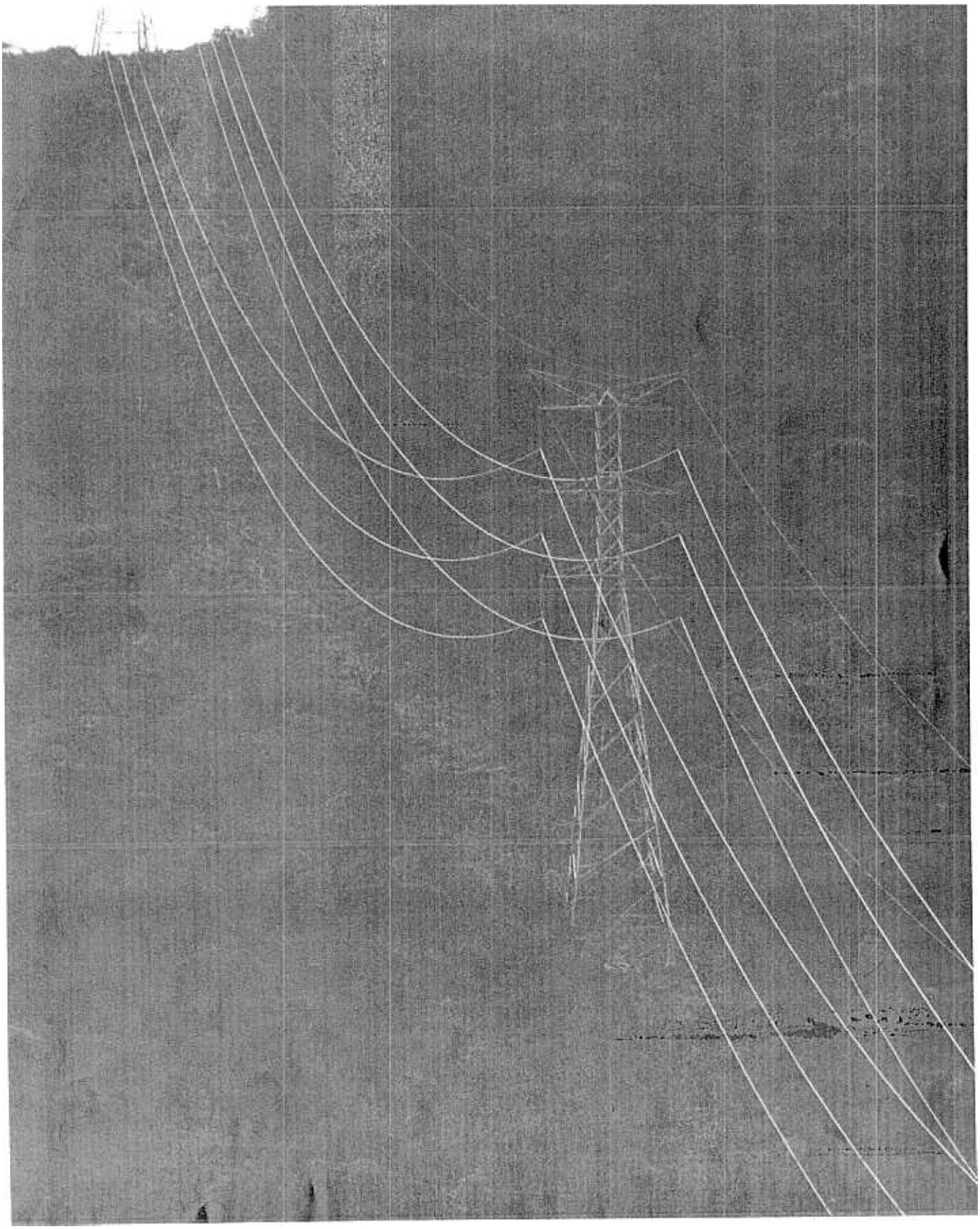

List of contents

List of illustrations

Introduction

The majority of transmission line outages result from faults involving ground with lightning as the principal cause.

A distance relay will operate for ground-faults as well as short-circuits. The capability of detecting very high resistive ground-faults is limited by the measuring principle used by distance relays.

By adding a directional ground-fault relay, more than ten times as high fault resistance can be detected. The high sensitivity (down to 5% of rated current) is achieved by measuring the zero sequence current.

High resistive ground-faults do not cause high fault currents. This means that relatively long fault clearing times can normally be accepted.

Two versions of directional ground-fault relays with time delayed operation are described in B03-3020E (type RXPE 47) and B03-3050E (type RAEPA).

When faster fault clearing is required, the directional ground-fault relay can be used in a directional comparison scheme with a communication channel. In such a scheme the ground-fault relay operates instantaneously but is allowed to trip only after receipt of a carrier signal (when a permissive scheme is used). In this way tripping will be made only for faults on the protected line section. This is illustrated in Fig. 1.

When introducing an instantaneous ground-fault relay in the protection system, the effect of parallel lines and single phase auto-reclosing must also be considered. This is further discussed in Section 5.3.

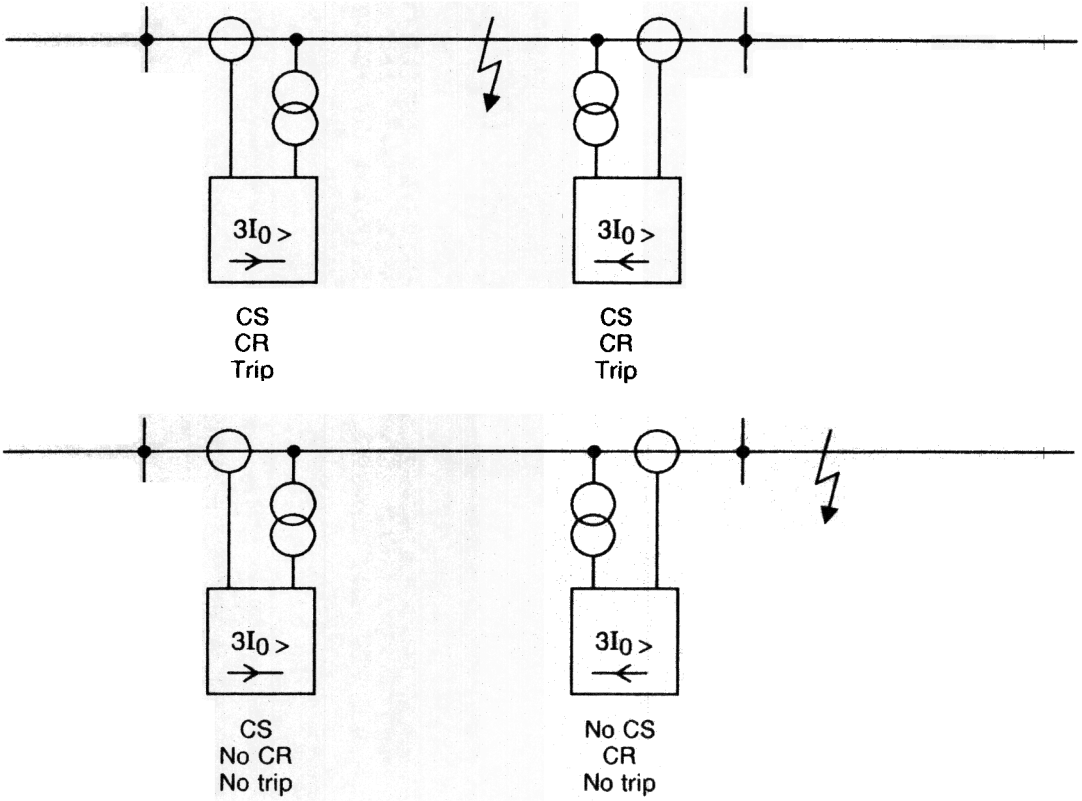

Fig. 1 Directional comparison operating principle

2. Directional ground-fault protection

In solidly grounded networks the residual fault current ($3I_0$) is lagging the residual voltage (U_0) by the angle of the zero sequence source impedance, consequently, the directional ground-fault relays have a characteristic angle of +65° (RXPE 47) and +70° (RAEPA). This means that maximum sensitivity is obtained when the operating current is lagging the polarizing voltage by 65° and 70° respectively.

The RXPE 47 assembly and the RAEPA relay have an overcurrent response which is sensitive to the cosine of the angle between the measured current and the current at which maximum sensitivity is obtained. See Fig 2.

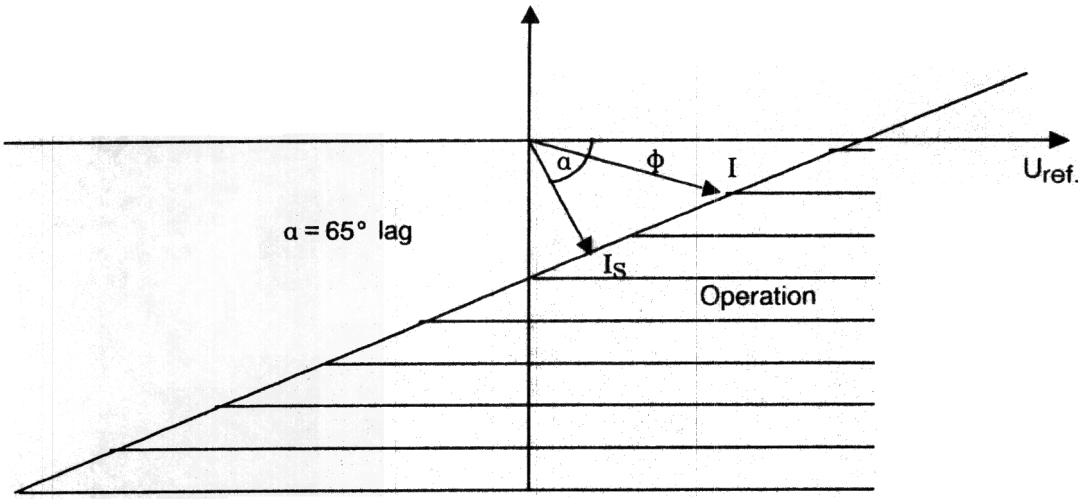

Fig. 2 RAEPA operates when 1 x cos (4-70°) >Is

The relays are not product relays in the conventional sense because the operating value is virtually independent of the polarizing voltage magnitude in the range 1 - 100% of rated voltage.

The insensitivity to d.c. offset reduces transient overreach.

The RXPE 47 assembly has a sensitivity down to 1% of rated voltage. See Fig 3.

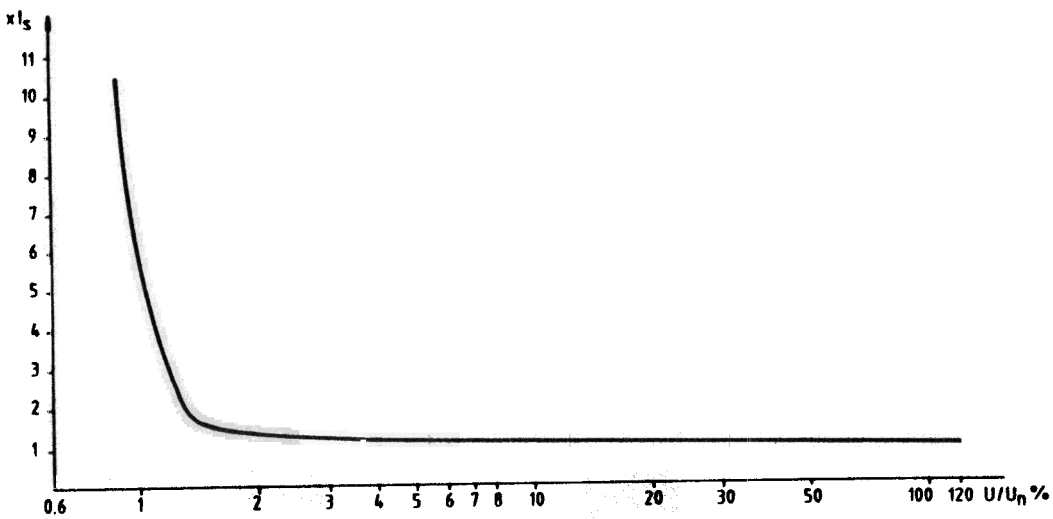

Fig. 3 RXPE 47 operating values

For low values of residual voltage the RXPE 47 relay's directional measuring properties are influenced by the presence of harmonics. The third harmonic content can be relatively high for CCVT's connected in broken delta. For proper operation, the harmonic voltage should always be less than the lowest fundamental polarizing voltage required by the RXPE 47 relay.

If operation is required for residual polarizing voltages equal to or lower than existing harmonics, we recommend the RAEPA relay. RAEPA contains harmonic filtering which enables it to operate reliably for a fundamental voltage component equal to only 0.75% of rated voltage with the simultaneous presence of a third harmonic equal to 2% of rated voltage.

For lower harmonic content RAEPA has a sensitivity down to 0.5% of rated voltage. See Fig 4.

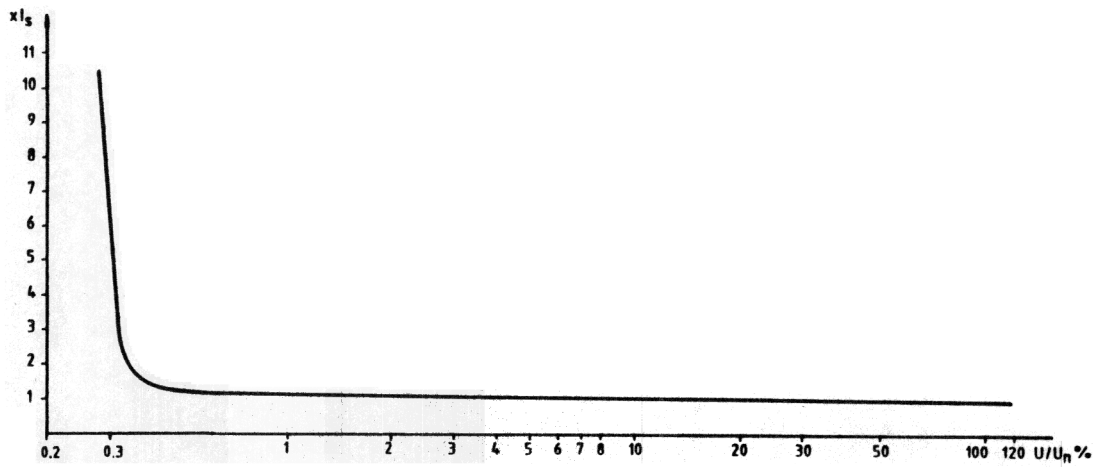

Fig. 4 RAEPA operating values

2.1

RXPE 47 assembly

The directional relay assemblies are available in three versions. These versions are described in Section 5. Circuit diagrams are shown with only the RAEPA relay, but are also valid for the RXPE 47 relay; simply substitute an RXPE 47 relay for the RAEPA relay in the diagrams.

All versions include directional relay RXPE 47, a test switch RTXP 18 and various auxiliary and time-delay relays, as described in Section 5.

2.2

RAEPA assembly

The directional relay assemblies are available in three versions. These versions are described in Section 5.

All versions include directional relay RAEPA, a test switch RTXP 18 and various auxiliary and time-delay relays, as described in Section 5.

3

Current and dual polarization

The standard version of the directional relays are voltage polarized. Due to the high sensitivity, down to 0.5% of rated voltage, there are very few applications where the relay would fail to operate.

The directional relays can also be supplied for current polarization. Current polarization is suitable when the residual voltage is insufficient, due to very low zero-sequence source impedance.

The polarizing current is taken from the neutral current of a local power transformer with a grounded neutral. The relay should give maximum sensitivity for 0° between the operating current and the polarizing current as the neutral current and the line residual current are in phase, therefore, neither the RAEPA (+70°) or the RXPE 47 (+65°) is suitable for this purpose. An RXPE 40 with 0° characteristic angle should be used instead. The polarizing current is applied over a resistor connected to the voltage inputs of the relay as shown in Fig 5.

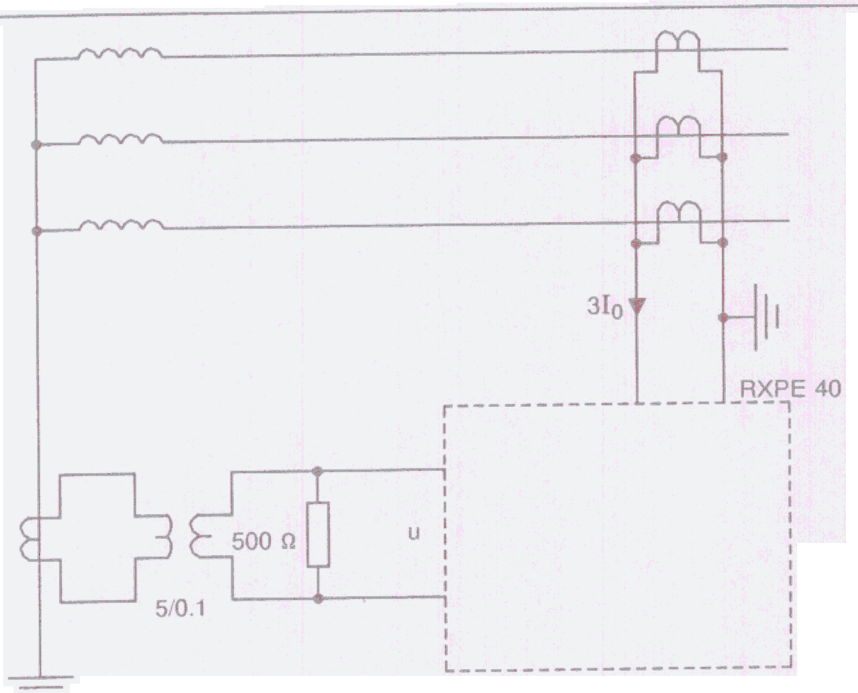

Fig. 5 Current polarization

Current polarization can only be used when the neutral current always flows from the ground into the system. Star/star transformers are not suitable for polarizing directional ground-fault relays.

Three-winding transformers with one or more windings delta-connected are suitable for relay polarization.

Solidly grounded auto-transformers may or may not be suitable. This has to be checked for the specific application.

In some applications, the residual voltage may be low at certain times due to low source impedance while at other times the source impedance may be high. In this case a dual polarized **RAEPA** can be used. The neutral current and the residual voltage are then used simultaneously for polarizing as shown in Fig 6.

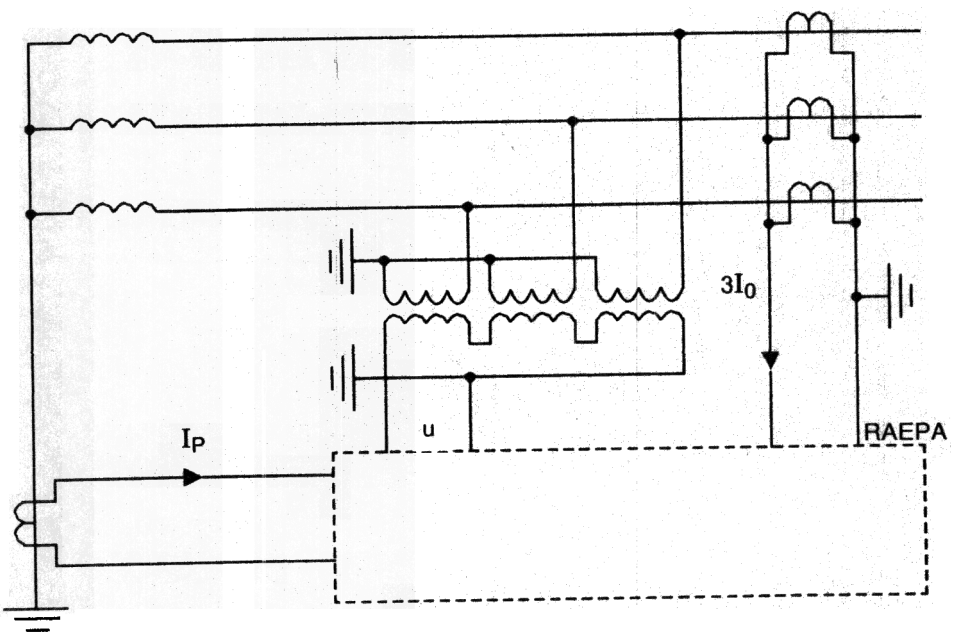

Fig. 6 Dual polarization

4. Cooperation with communication equipment

As the directional ground-fault relay works in a directional comparison scheme, communication with the remote line end is required.

The communication channel can be used exclusively for the directional ground-fault relay or for both the distance relay and the directional ground-fault relay.

If one common channel is used for both relays the following must be considered:

1. Both relays must work with the same scheme, permissive or blocking.
2. The healthy line can be tripped for a fault on the parallel line when short, parallel lines are connected to common buses, with positive and zero-sequence current having different directions, as shown in Fig 7

   This can be avoided by using the reverse looking elements of the relay to block the carrier send signal from the forward looking elements.
3. If weak-infeed logic is used, both the distance relays and the directional ground-fault relay should be coordinated.

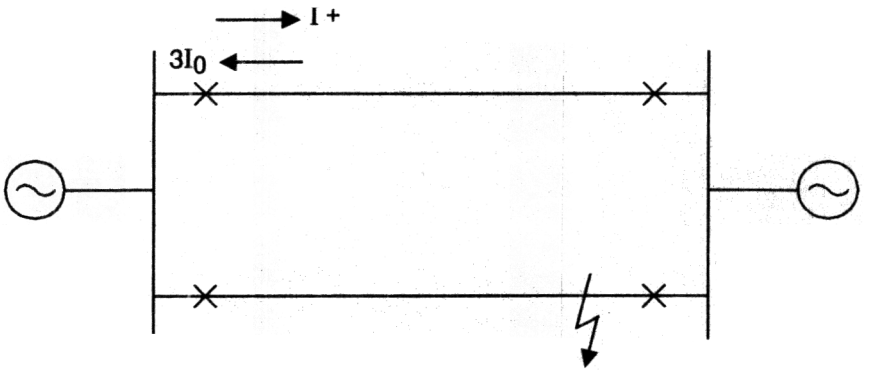

Fig. 7 Different direction of zero- and positive-sequence current

5. Protection schemes

There are three basic schemes for the directional ground-fault protection, one for permissive and two versions for blocking scheme. The basic schemes do not include trip relays, so trip logic should be added. For permissive schemes you can also add current reversal logic and weak-infeed logic, when so required.

A separate phase selector unit is available for both permissive and blocking schemes as well as a single phase tripping unit.

An example of how the different logics are combined is shown in Fig 30.

5.1 Basic logic - permissive scheme

When RAEPA is used in a directional comparison permissive scheme, it is sufficient to have only one forward looking directional element.

The logic is shown in Fig 8.

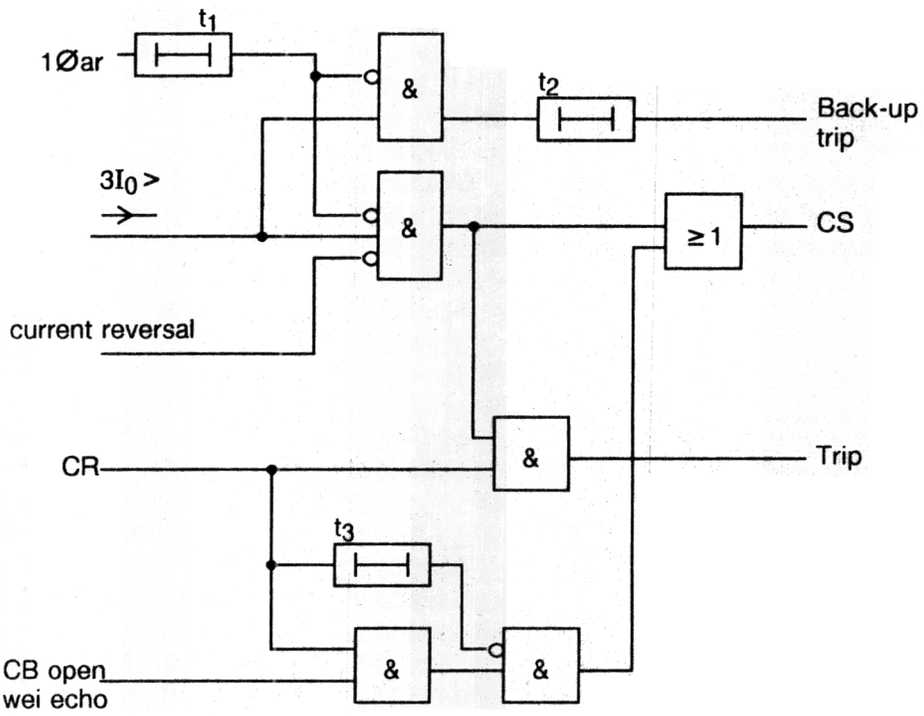

Fig. 8 Basic logic permissive scheme (5.1)

The operation in line end A is as follows:

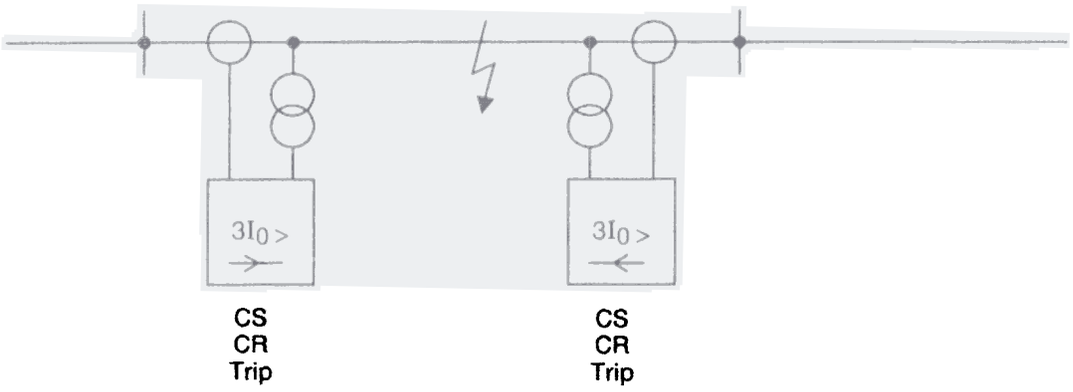

Fig. 9 Internal fault

A. Internal fault, fig 9.

1. The RAEPA relay detects a forward fault and sends a carrier signal.
2. A carrier signal is received (as the remote RAEPA also has detected a forward fault) and the breaker is tripped.
3. If no carrier signal is received the relay gives a back-up trip after the time t_2, settable to 0.2-3 s.

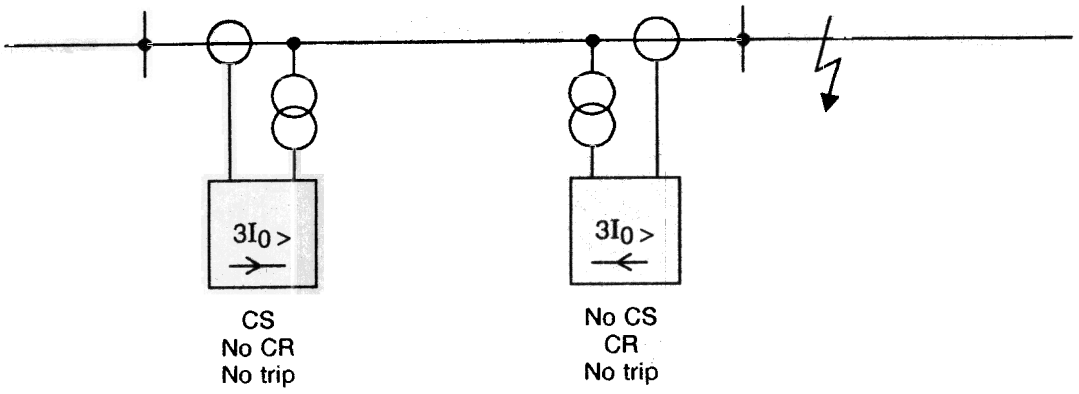

Fig. 10 External fault

B. External fault, fig 10.

1. The RAEPA relay detects a forward fault and sends a carrier signal.
2. No carrier signal is received (as the remote RAEPA has not detected any forward fault) and no instantaneous tripping is made.
3. If the fault persists during the time t_2, a back-up trip will be made.

C. Operation is blocked by:

1. Start of single-phase auto-reclosing. When one breaker pole is open, the load current in the healthy phases will produce a zero-sequence current that may give relay operation.

   The block remains during the time t_1, settable to 60 ms -20 sec. t_1 should be set longer than circuit breaker closing time + 120 ms.

   If single phase auto-reclosing is not used the time-delay relay can be omitted.
2. Current reversals. The current reversal logic is described in Section 5.3.

D. Carrier send is given by:

1. RAEPA operation as described above.
2. If a carrier signal is received and the circuit breaker or line disconnector is open, or if there is a weak-infeed condition, the signal is echoed. The logic for this is included in the scheme. The weak-infeed logic is described in Section 5.4.

   The carrier echo is interrupted after the time t_3, settable 0.08-1.2 sec. The reason for this is to avoid "ringing" which means that a spurious carrier signal would go on being echoed from one line end to the other. Suitable setting is about 100 ms.

Basic logic - blocking scheme

When RAEPA is used in a directional comparison blocking scheme, one forward and one reverse looking element are required. Version 5.2.1 includes one RAEPA and one zero-sequence current measuring relay, type RXIG 22. The forward looking function is given by operation of RXIG 22 and no operation of the reverse-looking RAEPA.

This means that if a fault is detected and it is not in the reverse direction it must be in the forward direction. Version 5.2.2 includes two RAEPA's. One looking in the forward direction and the other in the reverse direction. The logics are shown in Fig 11 and 12.

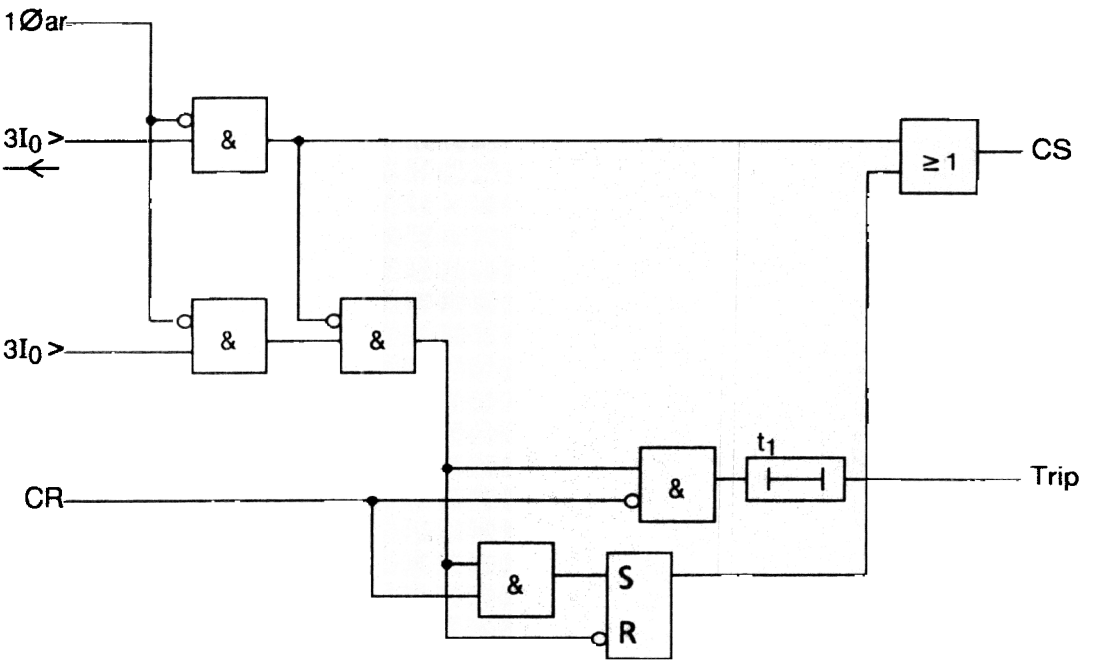

Fig. 11 Basic logic - blocking scheme (5.2.1)

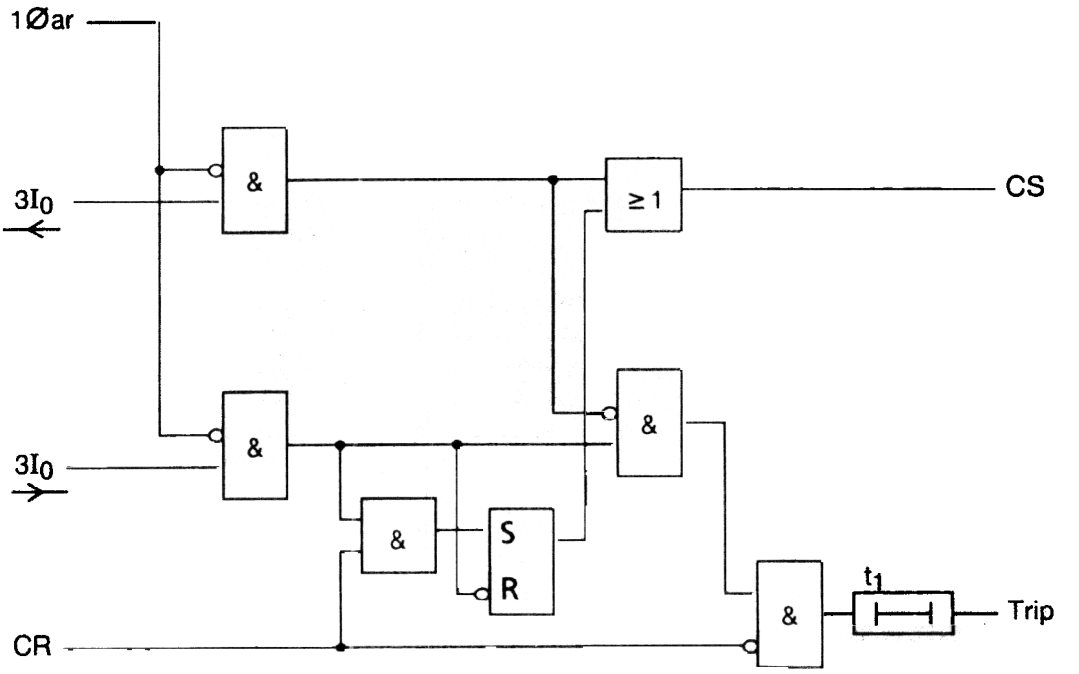

Fig. 12 Basic logic blocking scheme (5.2.2)

Version 5.2.2 provides about 30 ms faster tripping than version 5.2.1. In version 5.2.2 tripping is made by RAEPA while in version 5.2.1 tripping is made by RXIG 22.

See Fig 13.

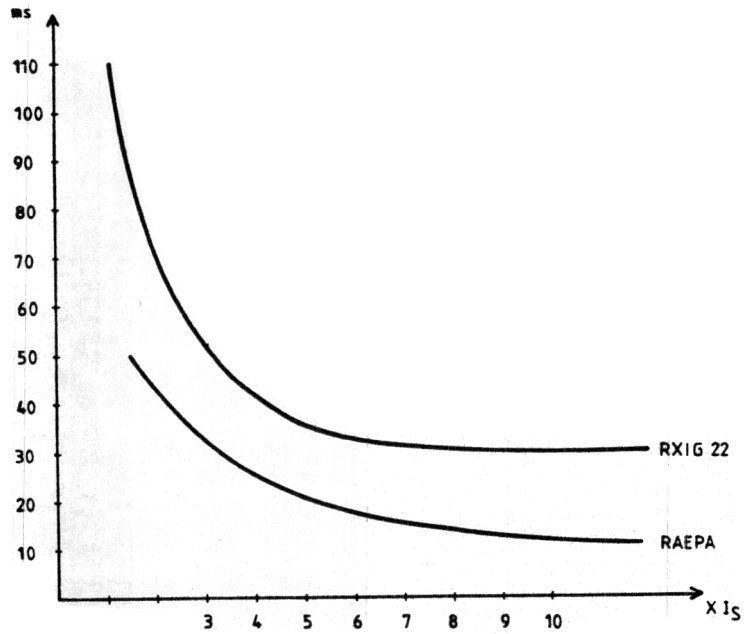

Fig. 13 Operating time of RAEPA and RXIG 22

The operation in line end A is as follows:

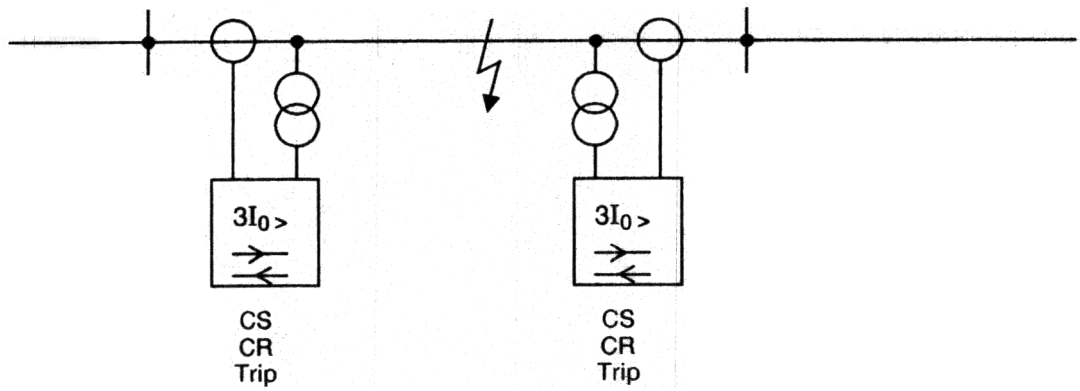

Fig. 14 Internal fault

A. Internal fault, fig 14.

The RXIG 22 or the forward looking RAEPA detects a fault. The reverse looking RAEPA does not operate and therefore no carrier signal is sent.

2. The time-delay relay t_1 is timed out. No carrier signal is received as the remote end, reverse-looking RAEPA has not detected any reverse fault. The breaker is tripped. t_1 should be set to maximum carrier time + margin. When version 5.2.1 is used, t_1 should not be less than 30 ms.

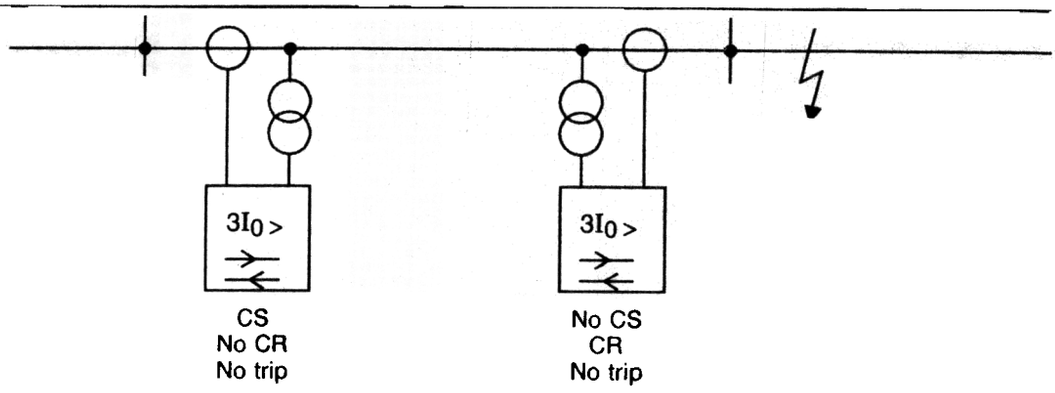

Fig. 15 External fault

B. External fault, fig 15

1. The RXIG 22 or forward-looking RAEPA detects a fault. The reverse-looking RAEPA does not operate and therefore no carrier signal is sent.
2. A blocking carrier signal is received before t_1 has timed out as the remote end, reverse-looking RAEPA has detected a reverse fault, therefore no tripping occurs.
3. The carrier signal is echoed back to the remote end. This prevents tripping of the remote end, in case the reverse looking element should reset faster than the forward looking element when the fault is cleared.

5.3

Current reversal logic

Fault current reversals can occur in interconnected power systems or in parallel lines. The circuit breakers in each end of the faulty line will never clear the fault simultaneously. The relay on the adjacent healthy line will first see the fault in the forward direction and then when one circuit breaker opens, the fault will be seen in the reverse direction. See fig 16.

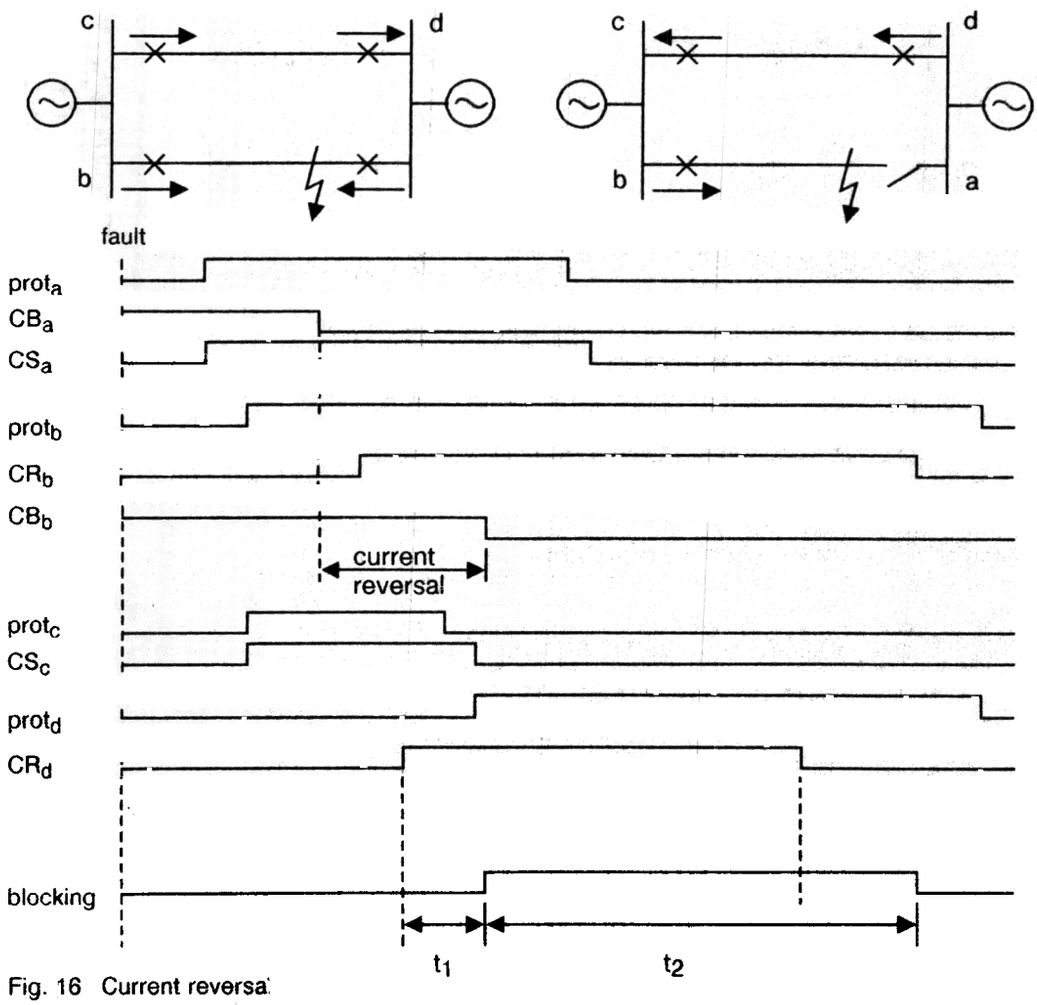

Fig. 16 Current reversal

Single-phase auto-reclosing on adjacent lines can also give zero sequence current reversal as shown in Fig 17.

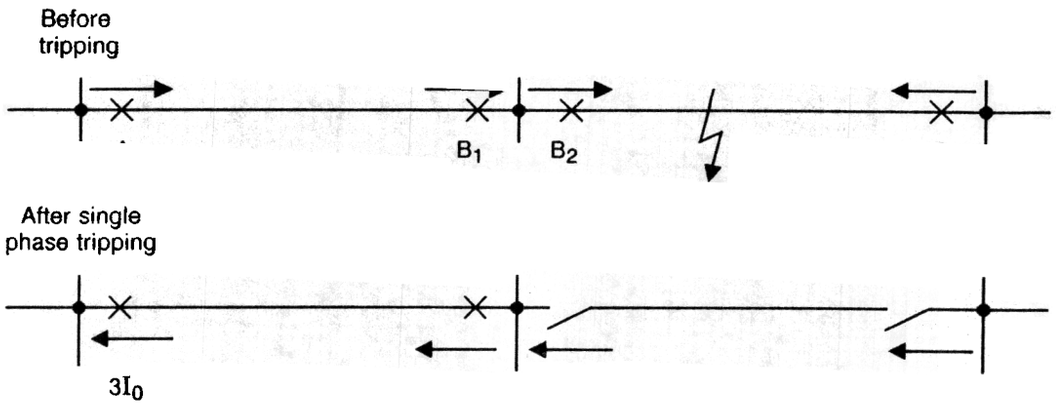

Fig. 17 Current reversal during single phase auto-reclosing

A ground-fault on line section BC will be detected as a reverse fault by the relay in B1. When the circuit breaker in B2 is opened in the faulty phase, the load currents in the healthy phases might give a zero-sequence current that is now seen as a forward fault in B1.

Fault current reversals do not have to be considered in blocking schemes. In such schemes, the communication coordination time-delay t_1, and the reverse measuring zone, prevent maloperation during fault current reversals.

In permissive overreach schemes, fault current reversals might cause mal-operations if steps are not taken to prevent this. The directional ground-fault relay should be blocked during current reversals. This is done by separate current reversal logic.

The current reversal logic is available in three versions 5.3.1, 5.3.2 and 5.3.3. Which version to use depends on the operating time of the distance relay, carrier transmission time and circuit breaker opening time. The limitations regarding these times are given for each version below.

Version 5.3.1

The current reversal logic is built up of time-delay and auxiliary relays. Signals for carrier receive and directional ground-fault relay operation are taken from the basic logic 5.1. See fig 18.

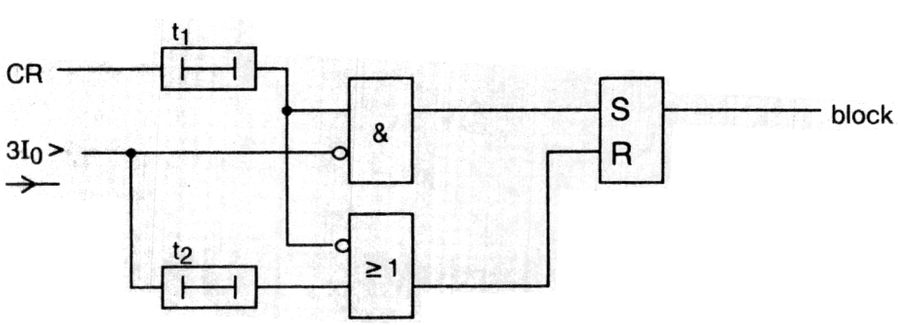

Fig. 18 Current reversal logic (5.3.1)

The current reversal logic operates as follows:

1. The logic allows operation of the directional ground-fault relay, provided that the carrier receive signal has not been present during the time t_1, before the relay operates.
2. If the carrier receive signal comes t_1 before RAEPA operation, this is a current reversal condition and the protection is blocked. The block remains until RAEPA has been picked up during the time t_2 or the carrier receive signal disappears.

   t_2 should be set to carrier reset + 30 ms.

   t_1 should be set according to the following:

   t_1 > 30 ms in order to get secure operation for internal faults

   t_1 < shortest fault clearing time minus maximum carrier transmission time minus 20 ms

With fast circuit breakers together with a long carrier transmission time, it might not be possible to set t_1. Version 5.3.2 or 5.3.3 should then be used.

Version 5.3.2

The current reversal logic is built up of time-delay and auxiliary relays plus a zero-sequence current measuring relay type RXIG 22. The RXIG 22 relay provides a reverse looking function, the logic being that the presence of zero-sequence current and no operation of the forward-looking RAEPA must mean that the fault is in the reverse direction. The signal for forward ground fault is taken from the basic logic 5.1. See Fig 19.

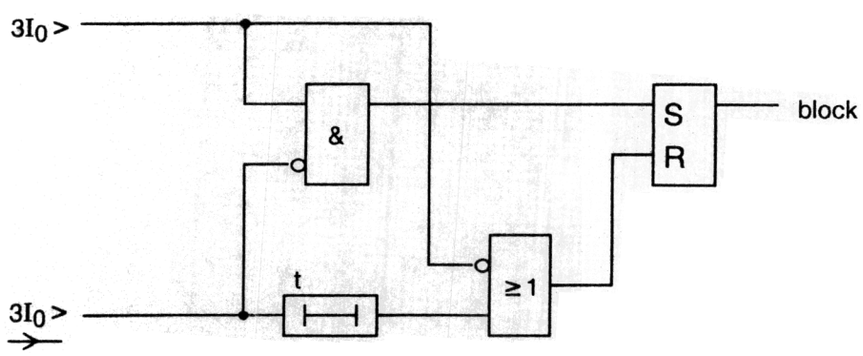

Fig. 19 Current reversal logic (5.3.2)

The current reversal logic operates as follows:

1. Operation of RXIG together with no operation of the RAEPA relay means a fault in the reverse direction and the directional ground-fault relay is blocked. The block remains until the fault disappears or the forward-looking RAEPA signal is picked up during the time t.

   t should be set to carrier reset time + 30 ms. RXIG 22 has longer operating time than RAEPA and therefore version 5.3.2 will operate correctly only if minimum fault clearing time (relay protection plus circuit breaker) is longer than 40 ms. If the fault clearing time can be shorter, version 5.3.3 should be used.

Version 5.3.3

The current reversal logic is built up of time-delay relays and auxiliary relays, plus a directional ground-fault relay, type RAEPA, looking in the reverse direction. The signal for a forward ground-fault is taken from the basic logic 5.1. See fig 20.

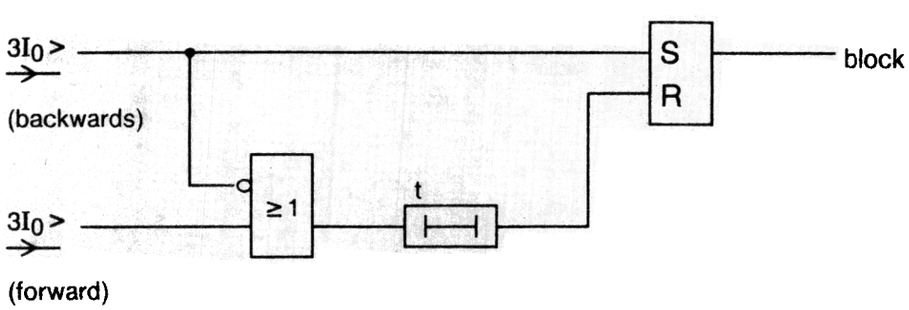

Fig. 20 Current reversal logic (5.3.3)

The current reversal logic operates as follows:

1. Operation of the reverse looking RAEPA blocks the directional ground-fault relay. The block remains during time t after the fault disappears or until the forward looking RAEPA has operated.

t should be set to carrier reset time plus 30 ms.

For version 5.3.3 there are no limitations regarding minimum fault clearing time or maximum carrier transmission time, as the two RAEPA's (forward and reverse looking) have the same operating and reset times.

5.4

Weak-infeed logic

Weak-infeed conditions can occur on a radially fed transmission line when no parallel path exists. The fault current infeed is then too low to operate the relays in the weakend. It should be noted, however, that a weak end can in many cases be strong for phase-ground faults and weak for phase-phase faults, as transformer neutral grounding may be available.

In blocking schemes the strong end will automatically be tripped during weak infeed conditions. There is no possibility to achieve tripping of the weak end as no permissive signal is sent from the strong end.

In permissive schemes a separate weak-infeed logic is required. The logic provides fast fault clearance from the strong end and tripping of the local weak end circuit breaker via an undervoltage criteria.

The weak-end-logic is built up of time-delay and auxiliary relays plus undervoltage relays type RXEG 21. The signal for forward directional relay operation is taken from the basic logic 5.1. The signal for reverse looking relay operation is taken from the current reversal logic 5.3.2 (RXIG 22) or 5.3.3 (RAEPA). See Fig 21. If current reversal logic is not used, a separate RXIG 22 must be added to give this function.

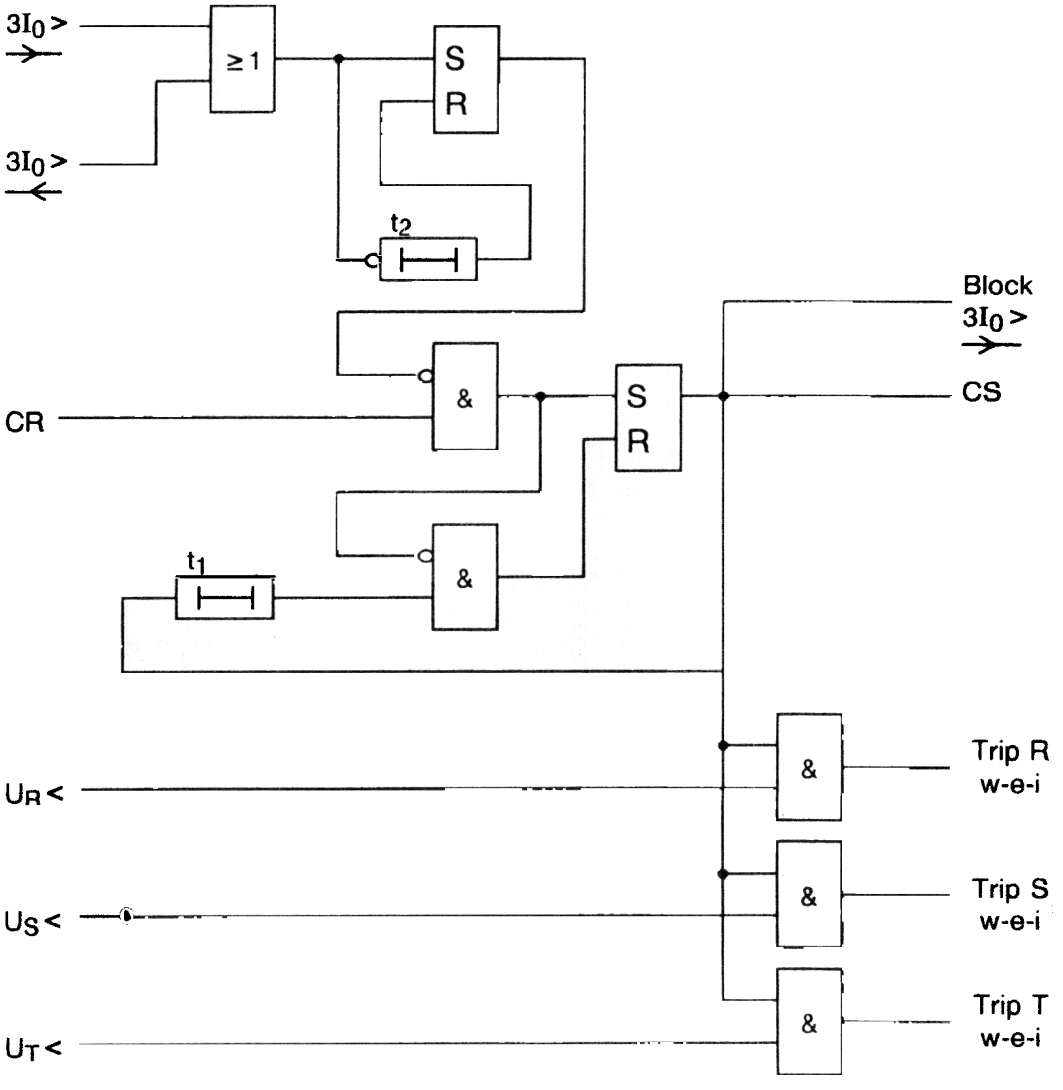

Fig. 21 Weak-infeed logic (5.4)

The weak-infeed logic operation is as follows:

1. A carrier signal is received, indicating that the relay in the strong end has operated.
2. There is no start of the relays in the local weak end because the fault current is too low.

   (If there is a start from the local relays, the weak-infeed logic is blocked. The block remains during the time t_2 after the relays have reset. t_2 should be set to carrier reset + 100 ms).
3. A carrier echo is sent. The echo signal is interrupted after t_3 (settable 0.08-1.2 s). The time-delay relay t_3 is included in the basic logic 5.1.
4. The directional ground-fault relay is blocked. This is to ensure that the relay does not operate due to single phase tripping of the remote line end circuit breaker.
5. Tripping of the local breaker is made as the voltage in the faulty phase(-s) has dropped below the set value of the under-voltage relay RXEG 21.
6. The weak-infeed circuit is reset after t_1 (0.2-3 s).

The time-delay relays t_1 and t_3 (t_3 is included in the basic logic 5.1) are included to minimize the effect of a spurious carrier signal. If a spurious signal is received, an echo will be sent (as the relays have not detected any fault). If the other line end is also supplied with weak-infeed logic, the signal will be echoed there as well. To avoid further echoing of the signal the echo is sent as a pulse, the length is determined by t_3; The circuit is then locked up during the time t_2. Recommended setting is t_3 = 80 ms, t_2 = 200 ms.

If a common channel is used for the distance relay and the directional ground-fault relay, the two relays must then have a common weak-infeed logic. This means that the logic should be blocked by the start of the distance relay.

5.5

Phase selector unit

The directional ground-fault relay can be used for single-phase tripping and reclosing if an additional phase selector is added. It is possible to give phase criteria from the distance relay but if higher sensitivity is required, a separate phase selector unit must be used.

The phase selector unit is built up of three directional relays, type RXPE 40. The basic principle is that for a ground-fault with high resistance, the phase angle between the neutral fault current and the related phase to ground voltage is relatively small. The higher the fault resistance, the smaller the phase shift. See Fig 22.

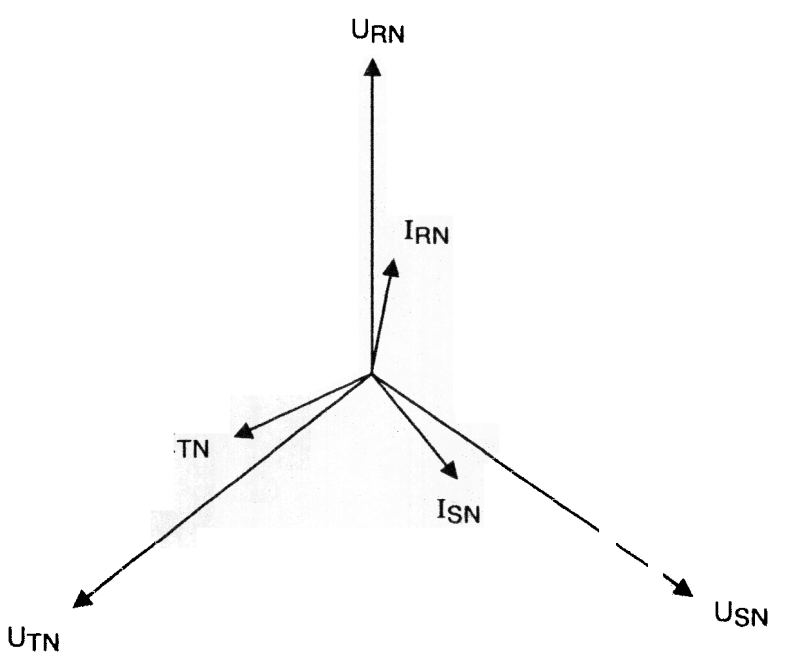

Fig. 22 Voltages and currents during phase to ground faults

The RXPE 40 relays, with 0° characteristic angle, measure the neutral current and each one has its own phase to ground voltage as reference. By using the following logic the faulty phase is identified:

$R \times \overline{T} = R$

$S \times \overline{R} = S$

$T \times \overline{S} = T$

The logic is shown in Fig 23.

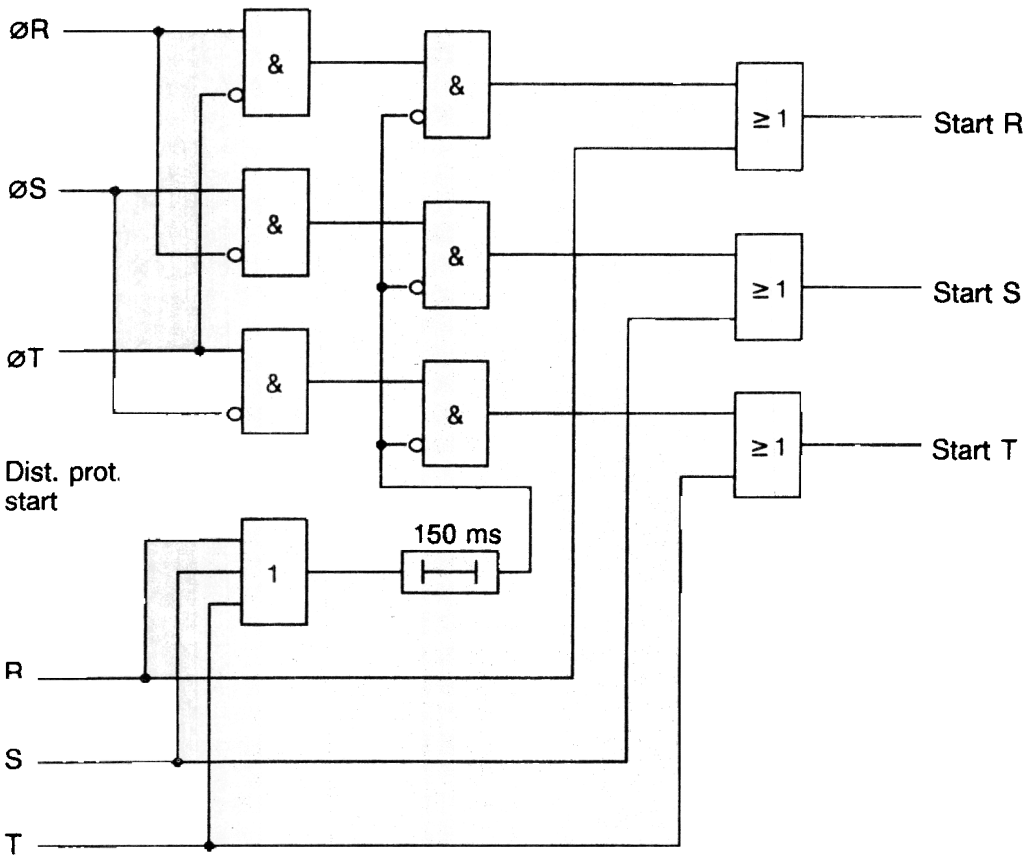

Fig. 23 Phase selector unit (5.5)

The purpose of the phase selector unit is to detect high resistive ground-faults. For faults with small fault resistance, close to the line terminal, the unit might fail to give correct phase selection. The unit must therefore be used together with the phase selection from a distance relay. A start blocks the RXPE 40 phase selector and the distance relay phase selection is used for tripping. The block is drop-out delayed 150 ms because the distance relay might reset faster than the directional ground-fault relay.

The phase selector unit does not include any tripping relays or logic for three-phase tripping and should therefore be used together with the single-phase tripping logic described in Section 5.6.

5.6

Trip logic

Two different trip logics are available, one for single-phase tripping and one for three-phase tripping.

5.6.1

Single-phase tripping logic

The directional ground-fault relay can be used for single-phase tripping if a phase selector is available.

The phase selection can be taken from the distance relay or, if higher sensitivity is required, from a separate phase selection unit together with the distance relay. The phase selection unit is described in Section 5.5.

The single-phase trip unit gives single phase tripping for single-phase faults and three-phase tripping for other types of ground-faults. It also gives three-phase tripping when the auto-recloser gives the signal "prepare 3Ø trip". This will be done after a reclosing has been made or if the auto-recloser is set for three-phase tripping only.

The logic includes a time-delay relay that will give three-phase tripping after the time t, for a fault that is outside the reach of the phase selectors but inside the reach of the directional ground-fault relay. See Fig. 24.

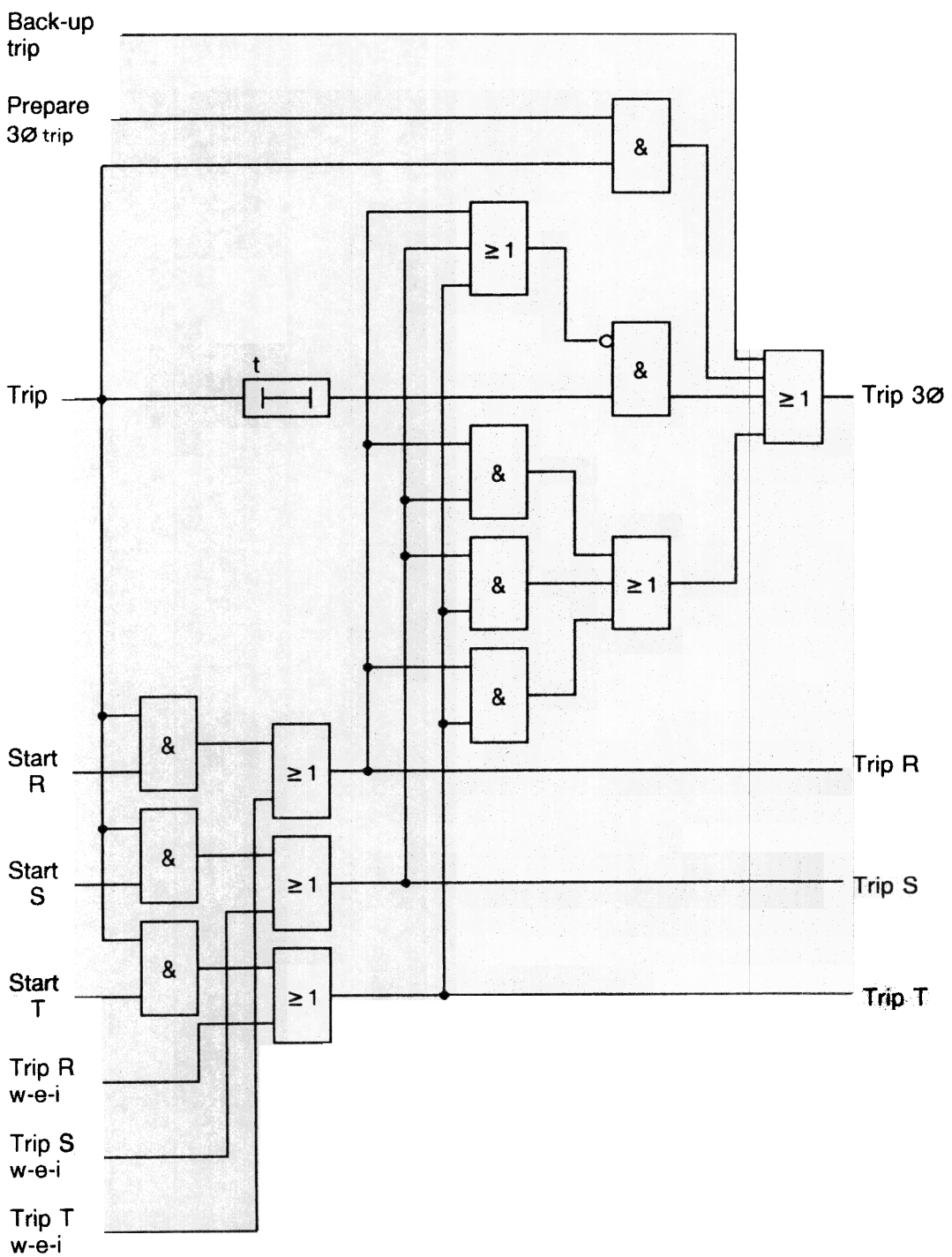

Fig. 24 Single phase tripping logic (5.6.1)

The setting of t depends on the operating time of the phase selectors. If the phase selection unit described in Section 5.5 is used, t should be set to a minimum of 80 ms.

If weak-infeed logic is used, trip signals from this unit are also routed via the single phase trip unit. The weak-infeed logic is described in Section 5.4.

Tripping is made by fast-acting auxiliary relays type RXMS 1 in parallel with auxiliary relay RXME 18 with heavy-duty contacts and flag indication. Technical data for the auxiliary relays is found in Buyer's Guide.

5.6.2

Three-phase tripping unit

The three-phase tripping unit consists of a fast-acting auxiliary relay, type RXMS 1, in parallel with an auxiliary relay, type RXME 18, with heavy duty contacts and flag indication. For back-up tripping one RXME 18 is provided. Technical data for the auxiliary relays is found in Buyer's Guide.

If weak-infeed logic is used, the trip signal from this unit is also routed via the three-phase trip unit. See Fig 25. The weak-end-infeed logic is described in Section 5.4.

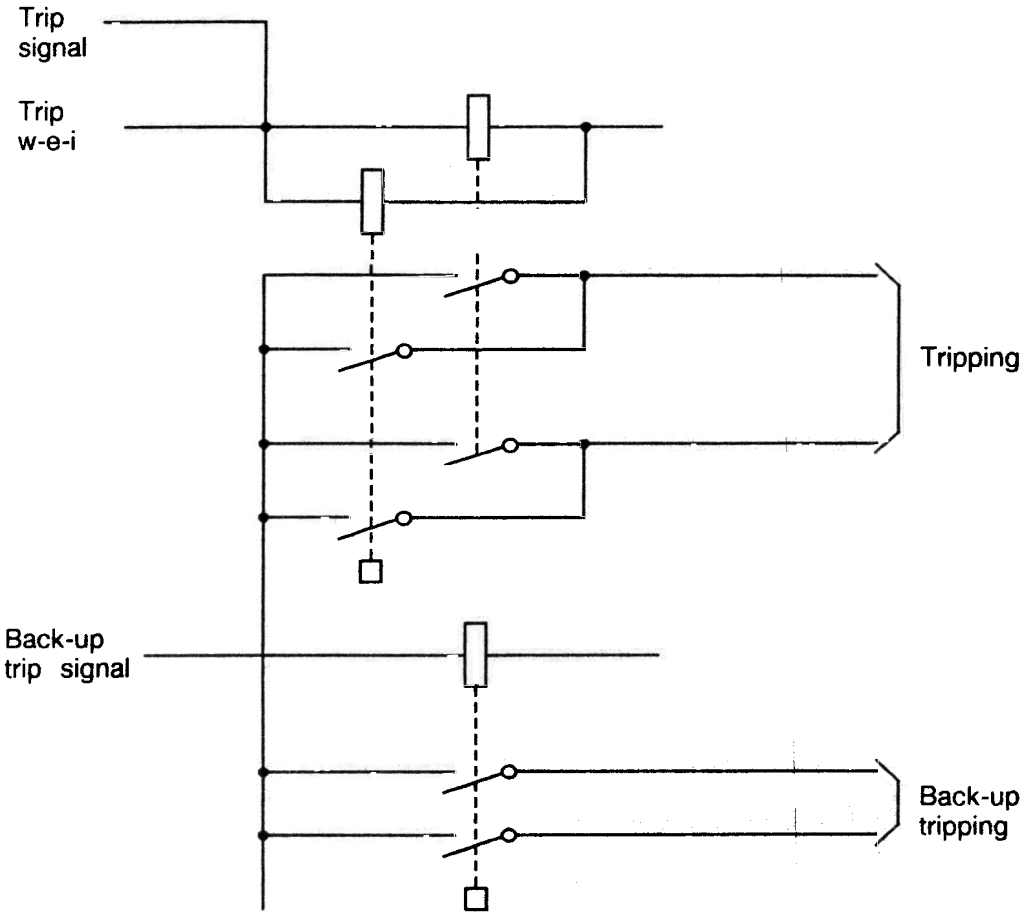

Fig. 25 Three-phase tripping unit

6 Technical data

Technical data for the different measuring relays is given below. For technical data for auxiliary and time-delay relays, please refer to Buyers Guide.

6.1 RXPE 47

Rated voltage U_n	110 V
Rated frequency	50 or 60 Hz
Scale factor K_s	10, 30, 100 mA, 0.3, 1 or 3 A
Current range	(1-4) K_s
Auxiliary voltage	d.c. 24, 48-55, 110 - 125 and 220 - 250 V
Voltage range for operation	1-150% of U_n

Voltage circuit:

Power consumption at U_n	4.1 VA
Max voltage,	
continuous	2.7 x U_n
for 1 s	5.5 x U_n

Current circuit:

Power consumption at current = lowest setting

scale range	10-40 mA, 30-120 mA	0.1 mVA	
scale range	100-400 mA	0.15mVA	
scale range	0.3-1.2 A	0.5 mVA	
Max current, ...	.....	continuous	1 s
scale range	10-40 mA	2.2 A	50 A
scale range	30 mA -4 A	15 A ...	350 A

Auxiliary voltage circuit:

Power consumption

d.c. voltage	24 V	1.0 W
d.c. voltage	48/55 V .	1.9/2.8 W
d.c. voltage	110/125 V	2.4/3.2 W
d.c. voltage	220/250 V	4.9/6.5 W

Permitted auxiliary voltage deviation ..... –20 to + 10% of rated voltage

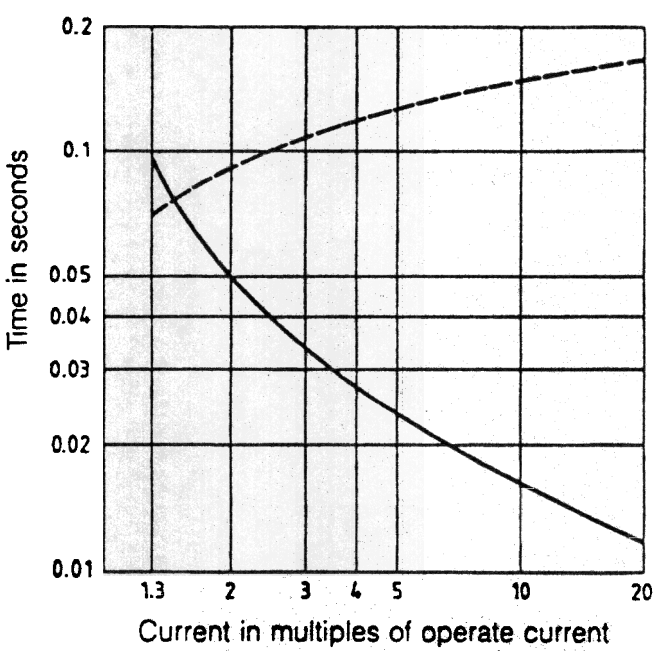

Fig. 26 Operating and reset (slashed) times RXPE 47

6.2
RAEPA

Rated voltage U_n	$110\sqrt{3}$, $110\sqrt{3}$, 110 or $110\sqrt{3}$ V
Rated frequency	50 or 60 Hz
Scale factor K_s	Reconnectable: 1 or 2 A
Current range	(0.05-0.1) K_s
Auxiliary voltage	d.c. 48, 110-125 and 220-250 V
Voltage range for operation	0.5-150 % of U_n

Dependency of voltage, phase angle and harmonics

The relay operates for a current
< 2 x set current when:
U = 0.75-150% of U_n
= 30° to 90° lagging
3rd harmonic of current < 20% of fundamental
3rd harmonic of voltage < 2 % of U_n

Voltage circuit:

Power consumption at	
U_n	5 VA
Max voltage,	
continuously	$1.1xU_n$ at 16-60 Hz
for 10 s	$3xU_n$ at 50-60 Hz
Saturation voltage ...	> $3xU_n$ at 50-60 Hz

Current circuit:

Power consumption	< 0.1 VA at $I = K_s$
Max current,	
continuously ...	15 A
for 1 s	300 A

Auxiliary voltage circuit:

Power consumption		
before operation,		
d.c. voltage	48 V	2 W
d.c. voltage	110-125 V	2.9 - 4 W
d.c. voltage	220-250 V	5.3 - 7 W

Permitted auxiliary voltage deviation	-20 to + 10% of rated voltage

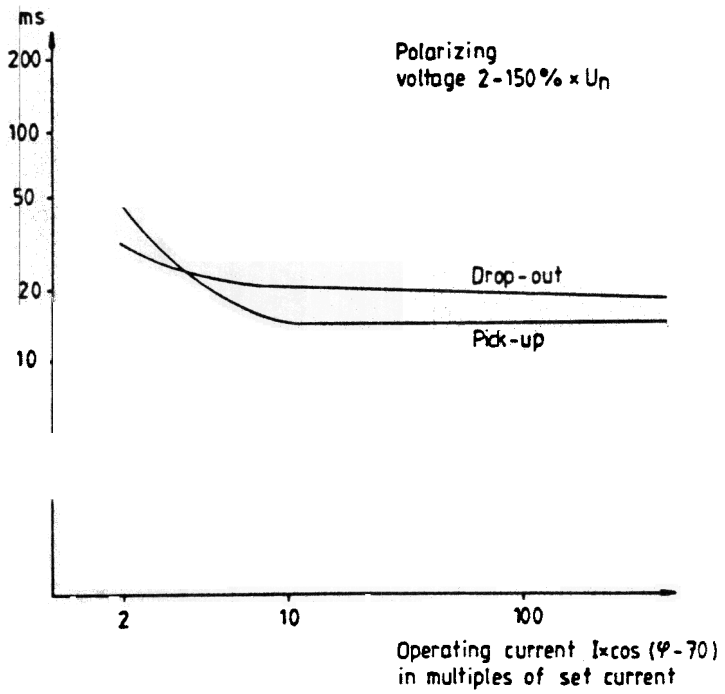

Fig. 27 Operating and reset times RAEPA

6.3

RXIG 22

Rated frequency	50 or 60 Hz
Scale factor K_s	10, 25, 50 mA, 0.1, 0.25, 0.5 A
Current range .	(1-3) K_s
Auxiliary voltage	d.c. 24, 48-60, 110-125, 220-250 V

Current circuit:

Power consumption at current = lowest setting	3.5 mVA
Max current, n x lowest setting	
continuously n = ...	40
1 s (max 350 A) n = ...	1700

Auxiliary voltage circuit:

Power consumption		
d.c. voltage	24 V	0.5 W
d.c. voltage	48/55 V .	1.4/1.8 W
d.c. voltage	60 V	2.2 W
d.c. voltage	110/125 V	1.3/1.7 W
d.c. voltage	220/250 V	3.2/4.2 W

Permitted auxiliary voltage deviation	-20 to +10% of rated voltage

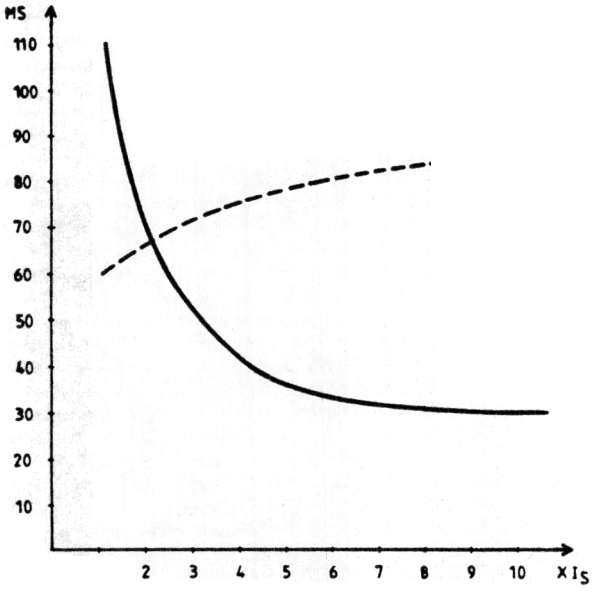

Fig. 28 Operating and reset (slashed) times RXIG 22

6.4
RXEG 21

Rated frequency	50-60 Hz	
Scale factor K_s	40 V	
Voltage range .	(1-3) K_s	
Auxiliary voltage	d.c. 24, 48-60, 110-125, 220-250 V	

Voltage circuit:

Power consumption	15 mVA	
Overload capacity		
Continuous	520 V	

Auxiliary voltage circuit:

Power consumption		
d.c. voltage	24 V	1.2 W
d.c. voltage	48/55 V .	2.1/2.8 W
d.c. voltage	60 V	3.4 W
d.c. voltage	110/125 V	2.0/2.6 W
d.c. voltage	220/250 V	4.0/5.1 W

Permitted auxiliary voltage deviation	–20 to +10% of rated voltage	

Operating time at instantaneous voltage change		
from 1.1 set value to U< U_{set} . . .	. . . . .	< 55 ms
from 1.3	. . . . .	< 60 ms
from 2.5	. . . . .	< 65 ms

Reset time at instantaneous voltage change from U< U_{set}		
1.1 x set value	. . . . .	< 30 ms
1.3 x set value	. . . . .	< 28 ms
2.5 x set value	. . . . .	< 25 ms

6.5
RXPE 40

Rated voltage U_n	110 V
Rated frequency	50-60 Hz
Scale factor K_s	3, 10, 30, 100 mA, 0.3, 1 or 3 A
Current range	(1-4) K_s
Auxiliary voltage	d.c. 24, 48-55, 110-125, 220-250 V
Voltage range for operation	0.6-120% of U_n

Voltage circuit:

Power consumption at U_n	4 VA
Max voltage,	
continuous	1.2 x U_n
for 1 s	1.5 x U_n

Current circuit:

Power consumption at current = lowest setting

scale range	10-40 mA, 30-120 mA	0.08 mVA
scale range	100-400 mA	0.12 mVA
scale range	0.3-1.2 A	0.4 mVA

Max current .		continuous	1 s
scale range	10-40 mA ..	2.2 A	50 A
scale range	30-120 mA .	6 A	120 A
scale range	100 mA -4 A	15 A	350 A

Auxiliary voltage circuit:

Power consumption

d.c. voltage	24 V	1.0 W
d.c. voltage	48/55 V .	1.9/2.8 W
d.c. voltage	110/125 V	2.4/3.2 W
d.c. voltage	220/250 V	4.9/6.5 W

Permitted auxiliary voltage deviation ..... –20 to + 10% of rated voltage

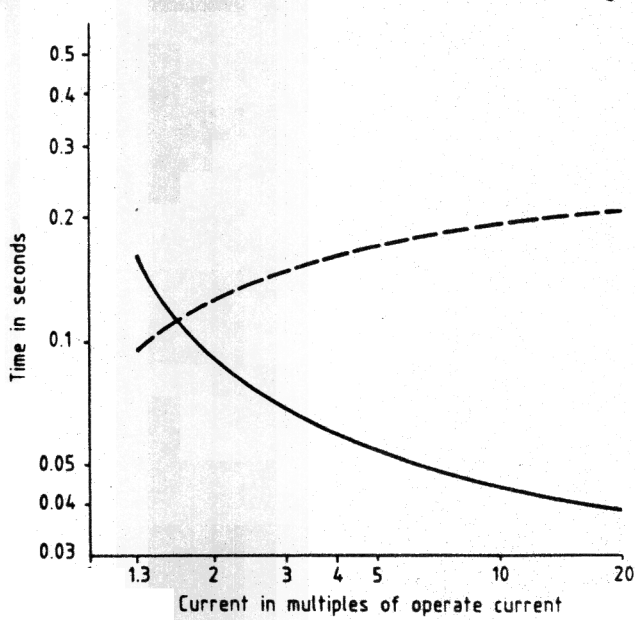

Fig. 29 Operating and reset (slashed) times RXPE 40

ABB Relays AB, S-721 71 Västerås, Sweden, Tel. +46 21 321300
Telefax + 46 21 146918, Telex 40836 abbrly s