Table of contents

1/2x19"

Rear view slot

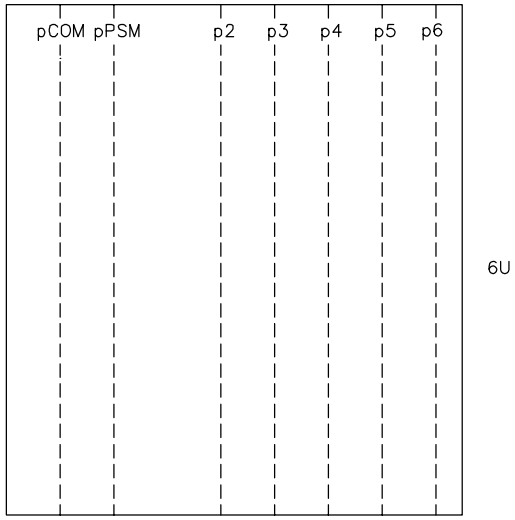

p= Position

Rear view terminal

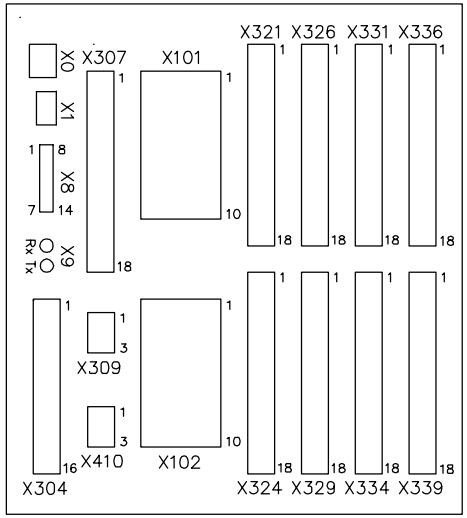

Designation for 6U, 1/2x19" casing with 1 TRM

Module	Slot	Terminal
COM	pCOM	X0, X1, X8, X9, X304
PSM	pPSM	X307. X309, X410
TRM	p2	X101, X102
BIO	p3	X321, X324
BIO	p4	X326, X329
BIO	p5	X331, X334
BIO	p6	X336, X339

Based on	Prepared 2011-08-23	Agneta Rydh	Title Connection Diagram REQ650 (1Ph/1CB/2BB) B11A ANSI symbols
	Approved 2011-11-30	Patrik Nyback	
	Project		

Rev	Rev. Note	Date	Name

ABB AB

Doc.des.	Ref.des.
Doc.kind	
Resp.dept. PSTP/TPLA	Rev.ind.
Doc.No. 1MRK006502-SC	Lang. en
	Sheet 2
	Cont. 3

1/1x19"

Rear view slot

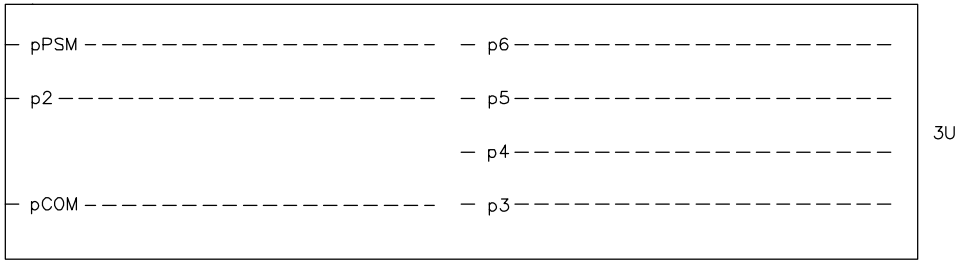

p= Position

Rear view terminal

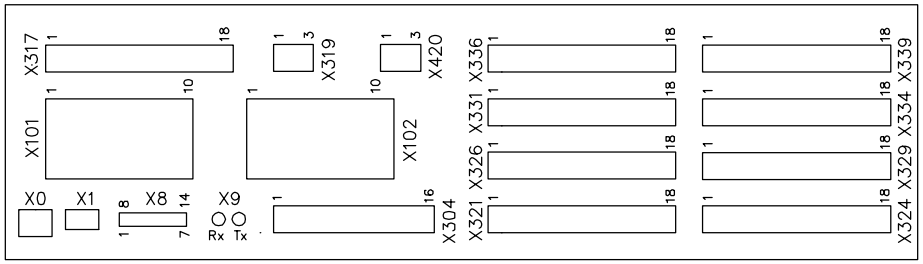

Designation for 3U, 1/1x19" casing with 1 TRM

Module	Slot	Terminal
COM	pCOM	X0, X1, X8, X9, X304
TRM	p2	X101, X102
PSM	pPSM	X317. X319, X420
BIO	p3	X321, X324
BIO	p4	X326, X329
BIO	p5	X331, X334
BIO	p6	X336, X339

Based on	Prepared 2011-08-23	Agneta Rydh	Title Connection Diagram REQ650 (1Ph/1CB/2BB) B11A ANSI symbols
	Approved 2011-11-30	Patrik Nyback	
	Project		
Rev / Rev. Note / Date / Name			ABB AB

Doc.des.	Doc.kind	Ref.des.
Resp.dept. PSNX/TPLA	Rev.ind.	Lang. en
Doc.No. 1MRK006502-SC		Sheet 3
		Cont. 4

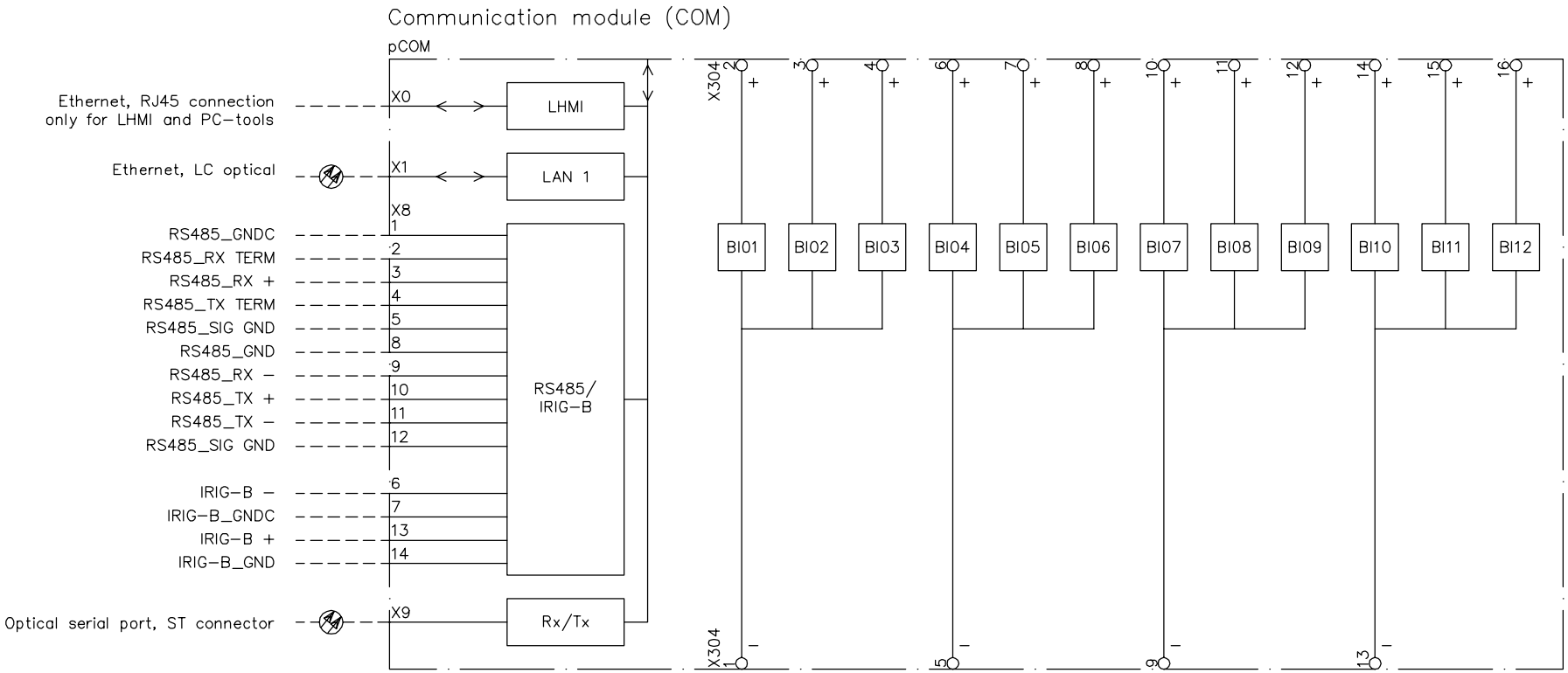

Observe polarity sequence

Configuration plant adapted	
BI01	ACTV_TESTMODE
BI02	CHANGE_LOCK
BI03	BKR1_SPRNG_CH
BI04	BKR1_SF6_LOW
BI05	79_EXT_RI
BI06	79_ON
BI07	79_OFF
BI08	EXT_25_START
BI09	EXT_DFR_START
BI10	EXT_TRIP
BI11	EXT_50BFI
BI12	RESET_LOCKOUT

Based on	Prepared 2011-08-23	Agneta Rydh	Title Connection Diagram REQ650 (1Ph/1CB/2BB) B11A ANSI symbols
	Approved 2011-11-30	Patrik Nyback	
	Project		

Rev	Rev. Note	Date	Name

ABB AB

Doc.des.	Doc.kind
Ref.des.	
Resp.dept.	PSTP/TPLA
Rev.ind.	
Doc.No.	1MRK006502-SC
Lang.	en
Sheet	4
Cont.	5

Power supply module 48–125 VDC (PSM)

pPSM

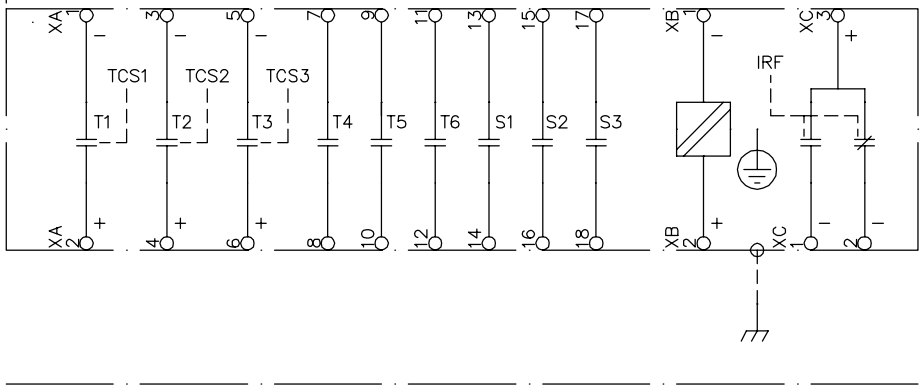

Rack casing	=XA	=XB	=XC
6U, 1/2x19"	X307	X410	X309
3U, 1/1x19"	X317	X420	X319

Observe polarity sequence

Configuration plant adapted

T1	BKR1_TR_A
T2	BKR1_TR_B
T3	BKR1_TR_C
T4	AUTO_SC_OK
T5	MAN_SC_OK
T6	GENERAL_ALARM
S1	SPARE
S2	SPARE
S3	GENERAL_TRIP
	Auxiliary supply EL
	Protective earth
	Normal
	Fail

Based on	Prepared 2011-08-23	Agneta Rydh	Title Connection Diagram REQ650 (1Ph/1CB/2BB) B11A ANSI symbols
	Approved 2011-11-30	Patrik Nyback	
	Project		
Rev / Rev. Note / Date / Name			ABB AB

Doc.des.	Doc.kind	Ref.des.
Resp.dept. PSTP/TPLA	Rev.ind.	Lang. en
Doc.No. 1MRK006502-SC		Sheet 5
		Cont. 6

Power supply module 110–250 VDC, 100–240 VAC (PSM)

pPSM

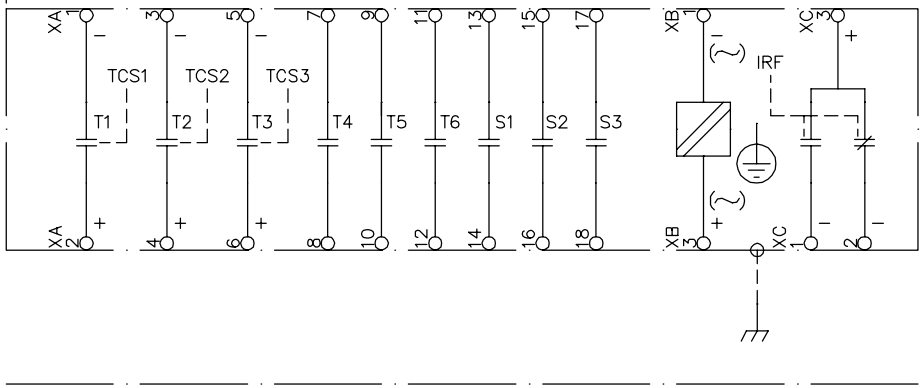

Rack casing	=XA	=XB	=XC
6U, 1/2x19"	X307	X410	X309
3U, 1/1x19"	X317	X420	X319

Observe polarity sequence

Configuration plant adapted

T1	BKR1_TR_A
T2	BKR1_TR_B
T3	BKR1_TR_C
T4	AUTO_SC_OK
T5	MAN_SC_OK
T6	GENERAL_ALARM
S1	SPARE
S2	SPARE
S3	GENERAL_TRIP
	Auxiliary supply EL
	Protective earth
	Normal
	Fail

Based on	Prepared 2011-08-23	Agneta Rydh	Title Connection Diagram REQ650 (1Ph/1CB/2BB) B11A ANSI symbols
	Approved 2011-11-30	Patrik Nyback	
	Project		

Rev	Rev. Note	Date	Name

ABB AB

Doc.des.	Doc.kind	Ref.des.	
Resp.dept.	PSTP/TPLA	Rev.ind.	Lang. en
Doc.No. 1MRK006502-SC			Sheet 6
			Cont. 7

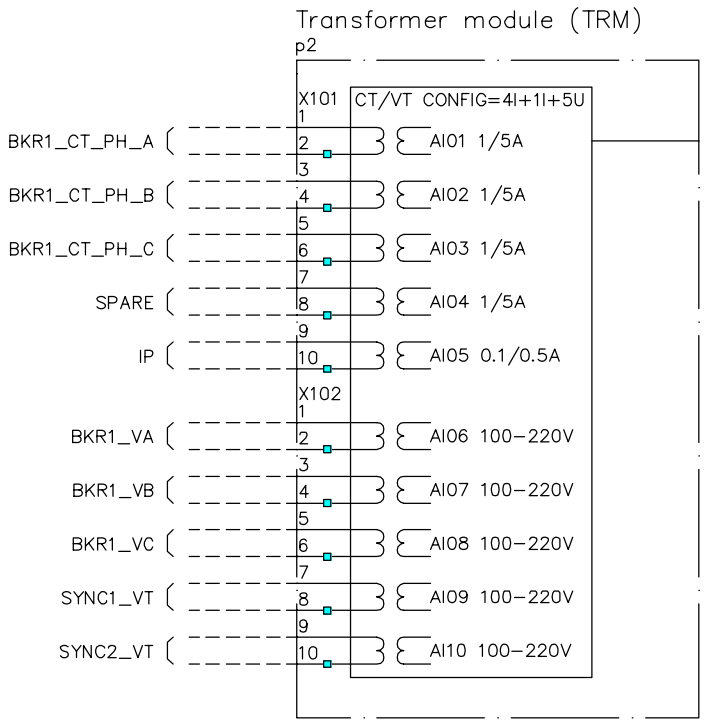

Compression or ringlug terminals

- Indicates polarity mark. Note that internal polarity can be adjusted by setting of analog input CT neutral direction and or on SMAI pre–processing function blocks.

Based on	Prepared 2011–08–23 Agneta Rydh	Title Connection Diagram REQ650 (1Ph/1CB/2BB) B11A ANSI symbols	Doc.des. Doc.kind
	Approved 2011–11–30 Patrik Nyback		Ref.des.
	Project		Resp.dept. PSTP/TPLA Rev.ind.
Rev Rev. Note Date Name		ABB AB	Doc.No. 1MRK006502–SC
			Lang. en Sheet 7 Cont. 8

Binary input/output module (BIO)

p3

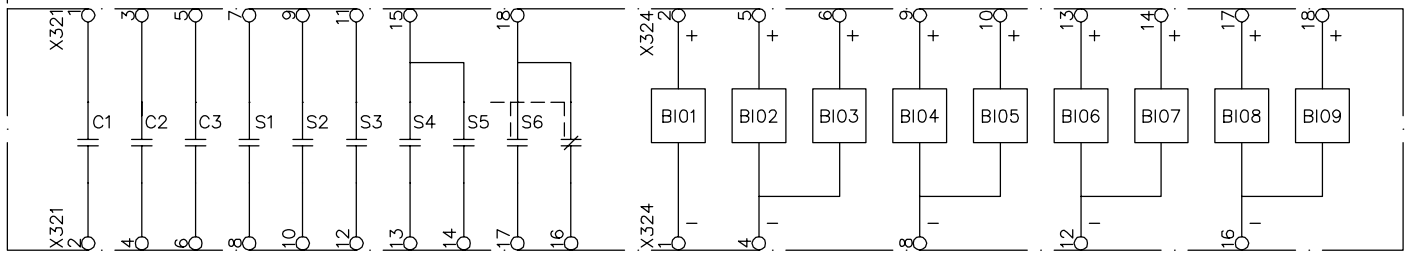

Observe polarity sequence

Configuration plant adapted

C1	TRIP_1PH
C2	TRIP_3PH
C3	1PH_RI
S1	3PH_RI
S2	79_INPROG
S3	50BF_TRIP
S4	SPARE
S5	BAT_SUPRV_AL
S6	BKR1_LOCKOUT
BI01	BKR1_VT_OK
BI02	SYNC1_VT_OK
BI03	SYNC2_VT_OK
BI04	189_52b
BI05	189_52a
BI06	289_52b
BI07	289_52a
BI08	989_52b
BI09	989_52a

Based on	Prepared 2011-08-23	Agneta Rydh	Title Connection Diagram REQ650 (1Ph/1CB/2BB) B11A ANSI symbols
	Approved 2011-11-30	Patrik Nyback	
	Project		

Rev	Rev. Note	Date	Name

ABB AB

Doc.des.	Ref.des.
Doc.kind	
Resp.dept. PSTP/TPLA	Rev.ind.
Doc.No. 1MRK006502-SC	Lang. en
	Sheet 8
	Cont. 9

Binary input/output module (BIO)

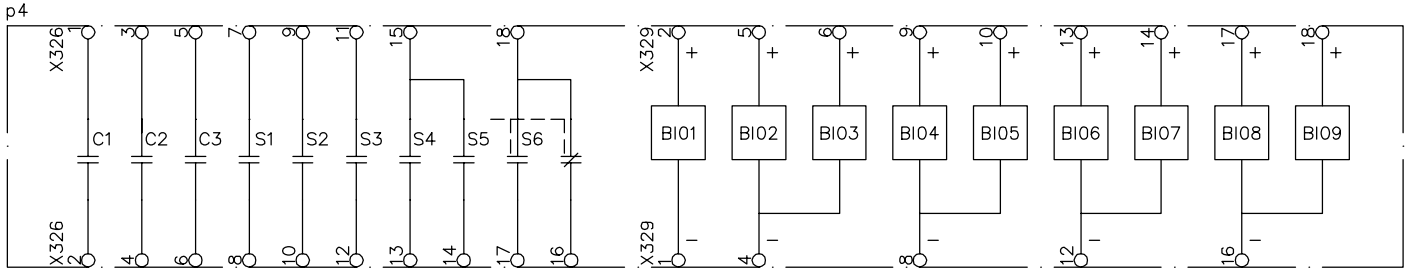

Observe polarity sequence

Configuration plant adapted

C1	79_CLOSE
C2	SPARE
C3	SPARE
S1	SPARE
S2	SPARE
S3	SPARE
S4	SPARE
S5	SPARE
S6	SPARE
BI01	BKR1_A_52b
BI02	BKR1_A_52a
BI03	BKR1_B_52b
BI04	BKR1_B_52a
BI05	BKR1_C_52b
BI06	BKR1_C_52a
BI07	EXT_TRIP_A
BI08	EXT_TRIP_B
BI09	EXT_TRIP_C

Based on	Prepared 2011-08-23	Agneta Rydh	Title Connection Diagram REQ650 (1Ph/1CB/2BB) B11A ANSI symbols
	Approved 2011-11-30	Patrik Nyback	
	Project		

Rev	Rev. Note	Date	Name

ABB AB

Doc.des.	Ref.des.
Doc.kind	
Resp.dept. PSTP/TPLA	Rev.ind.
Doc.No. 1MRK006502-SC	Lang. en
	Sheet 9
	Cont. –