Instantaneous measuring relays for a.c.

type RRIG 2 and RREG 2

- Measuring circuits built-up of static components
- Settable maximum and minimum operation in the same relay
- Wide scale range with ratio of 1:3
- Stepless setting of operating value
- High resetting ratio
  ⩾ 95% for maximum operation
  ⩽ 105% for minimum operation
- Auxiliary voltage stabilisation incorporated
- Low power consumption
  Special current relay 0.3 mVA
  Voltage relay 20 mVA
- Standard current relay completely insensitive to the d.c. component
- Suitable for short-circuit and earth-fault protections and in overvoltage protections
- Number of moving parts small giving very high resistance to vibrations and shock
- Occupy two relay seats in the ASEA RR plug-in system

Contents

	Page
Description	2, 3
Technical data	4
Ordering particulars	5
Ordering tables	6, 7

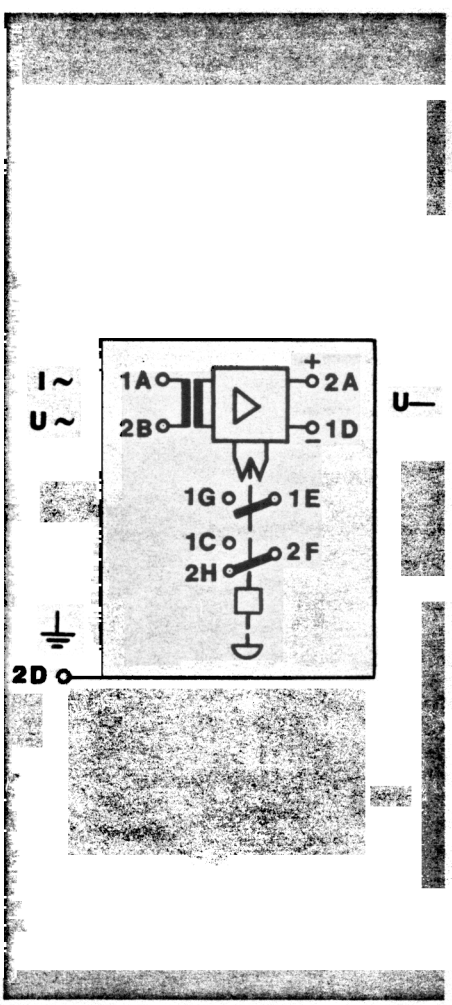

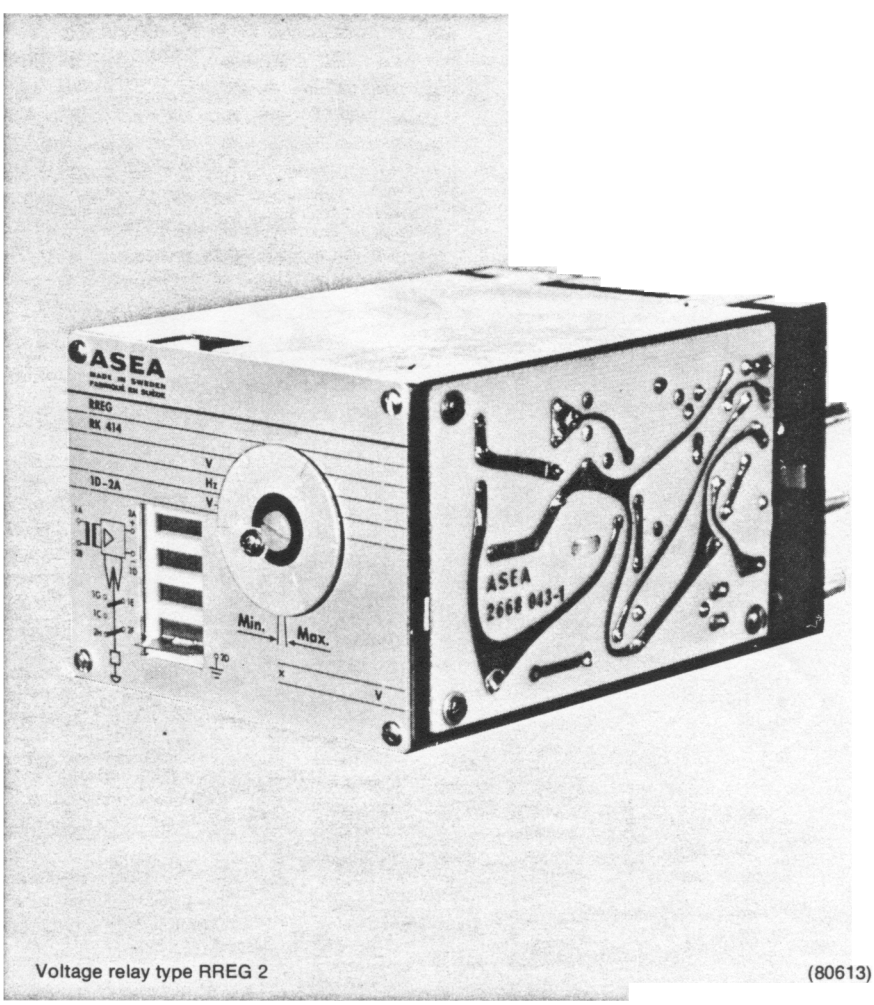

Voltage relay type RREG 2 (80613)

Static measuring a.c. relays type RRIG 2 and RREG 2

General

Instantaneous current and voltage relays types RRIG 2 and RREG 2 are calibrated for operation both at maximum and minimum values. The relays are designed for alternating current and voltage and are also fed with an auxiliary d.c. voltage. The output is an electromagnetic auxiliary relay.

The relays are of the plug-in type and belong to the ASEA RR plug-in system.

Current relay type RRIG 2

The standard version of the current relay RRIG 2 has an input circuit which makes it insensitive to the d.c. component. RRIG 2 can thus be used as a short-circuit protection for direct-on-line started induction motors.

One special version of the current relay has an extremely low power consumption (0.3 mVA at the lowest setting) and is intended for very sensitive earth-fault protection. This version is, however, not insensitive to the d.c. component. See the tables.

The standard relay can also be modified to acquire a higher operating value at higher frequencies than 50-60 Hz. This design is very useful when having a high level of harmonics. A special version having a lower operating value at higher frequencies than 50-60 Hz can also be manufactured. More data on the two versions is available on request.

The input transformer in the current relays has an airgap (except relays with extremely low power consumption). The relay may thus be used for measuring a.c. current superposed on d.c. current.

The current relay RRIG 2 is able to withstand heavy overloads and has a high resetting ratio. It is provided with one two-way contact and one make contact.

These current relays can be combined with a special short-circuiting device type RTNK see p. 3.

Voltage relay RREG 2

This voltage relay has a high resetting ratio, which makes it very useful for monitoring a.c. voltages. It is used e.g. in over-voltage protections for generators. The standard version of this relay may be used at higher frequencies up to 400 Hz with no variation in operating values.

The power consumption of the relay is low and it is very resistant to vibrations and shock.

Relay type RREG 2 has one two-way contact and one make contact.

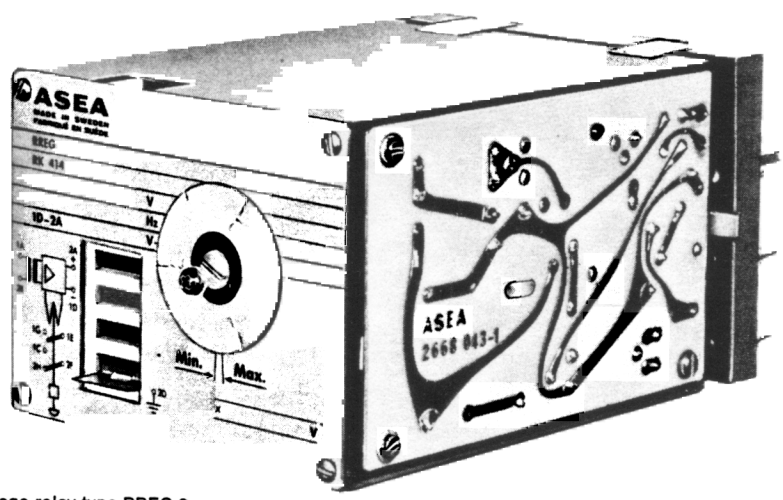

Voltage relay type RREG 2

(8061

Design and mode of operation

The block diagram and photograph show the layout and design of the relays.
These relays are built up of static components except for the output relay which is an electromagnetic auxiliary relay. The input circuits have transients protection.
Technical data as well as symbols are available in the following pages. The relays are fed with a d.c. auxiliary voltage of 24 or 110 V d.c. For other voltages an external resistor is connected in series with the relay, see p. 7.
Operating values are set by means of a screwdriver with the desired value at the min. or max. marking on the rating plate as required.

Mounting

The relays occupy two seats in the ASEA RR plug-in system which is described in Catalogue RK 92-1 E. Non-current-carrying parts are connected to terminal 2 D and can thus be earthed.
These relays are not affected by the magnetic fields of any other relays and can thus be mounted in any position relative to other relays.

Indicating flag

Both relays are provided with a red flag on the output relay. The flag is reset by hand.

Maintenance

Normally relays type RRIG 2 and RREG 2 do not call for any particular maintenance. The relays should be protected from dust and humidity.
Burnt contacts should be carefully dressed with a diamond file or an extremely fine file. Emery cloth or similar products are unsuitable for dressing relay contacts as insulating grains of abrasive may be deposited on the contact surfaces and cause malfunction.

Routine testing

Relays used for monitoring generally operate very infrequently and should therefore be routine-tested annually or every second year, but when the duty increases in severity, the frequency of inspections should be increased also.
By comparing the operating values at various times, a check can be made to see whether any deterioration has developed and whether a complete overhaul is necessary. Relays with static components like these have a smaller number of moving parts compared to electromechanical relays and the operating value is thus not affected by mechanical wear and tear.
To be able to remove a current relay without interrupting the current transformer secondary, a type RTNK short-circuiting device as listed in Catalogue RK 78-2 E may be provided, if the current transformer is not short-circuited in any other way.
Type RTNK is a stud-type device and is designed to screw into one of the relay coil terminals at the rear of the case, the connections then being arranged as shown in Cat. RK 78-2 E. See in addition fitting instructions 5609 159 Y which are supplied with the short-circuiting device. A certain distance at the point of fixing must be kept in order to obtain correct breaking. This is effected by means of spacers which are supplied.

Block diagram of static relays RRIG and RREG

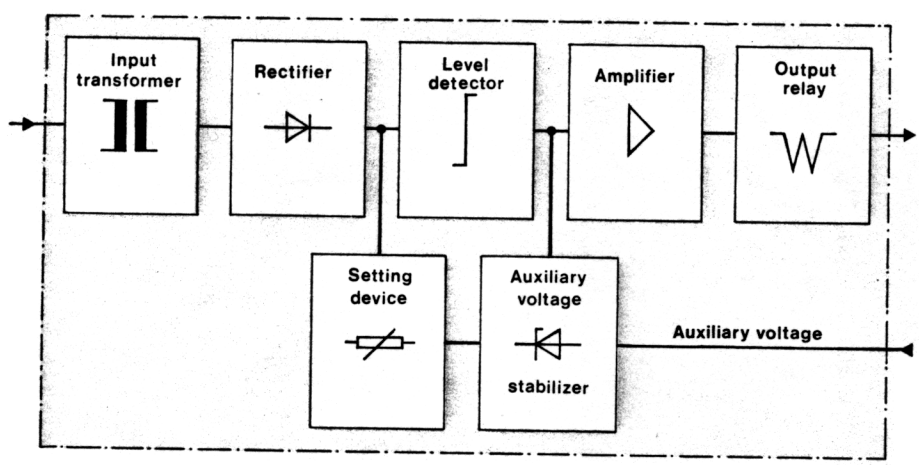

Technical data

General data

Max. voltage between lines	500 V a.c.
Rated frequency	50-60 Hz
Scales, overload capacity and power consumption	See ordering tables
Resetting ratio	Max operation $\geqq$ 95 % Min. operation $\leqq$ 105 %
Dispersion in the operating value	± 1 % of highest setting
Graduation and setting errors	± 3 % of highest setting
Permitted ambient temperature	—5 °C to +50 °C
Temperature dependence	Max. 0.15 %/°C
Test voltage	2000 V, 50 Hz
Impulse test	1/50 μs 5 kV, 0.5 joule Acc. to BEAMA 219
Weight	0.75 kg
Mechanical life	10^8 operations

Operating times, approx. ms (standard version)

Relay type	Scale setting l = lowest h = highest	Pick-up time for a sudden increase from 0 to n x pick-up value: n = 1.1	1.5	2.5	5	10	Drop-out time for a sudden decrease from 110 % of pick-up value to 0 % of set value
RRIG 2	l	55	50	45	35	30	150
	h	60	55	50	40	35	140
RREG 2	l	55	50	40	35	30	190
	h	55	50	40	35	30	180

Auxiliary voltage

Rated voltages	See ordering tables
Permitted variation	+ 10 % and — 20 %
Dependency on variations	For a +10 % or —20 % variation in aux. voltage, the operating value changes $\mp$ 2 % resp.
Power consumption	See ordering tables

Contact data

Maximum voltage between lines	300 V d.c. 250 V a.c.
Continuous current-carrying capacity	5 A (30 A for 0.2 s.)
Making capacity	10 A
Breaking capacity	
a.c. max. 220 V, P.F. $\geqq$ 0.1	10 A
d.c. 55 V, L/R $\leqq$ 40 ms	1 A
110 V	0.4 A
220 V	0.2 A

Ordering particulars

Cat
Type designa not obligatory)
customer requirements following should be
current voltage scale and rated frequency
The following are ordered separately:
Case as listed in Catalogue RK 92-1
lush-mounting frame, front terminals extension bolts atalogue

C. Special mounting listed Catalogue
Short-circuiting device RTNK Catalogue 78-2
hor rcuite by
Sepa resistors for ifferent auxiliary voltages see ordering table page 7).

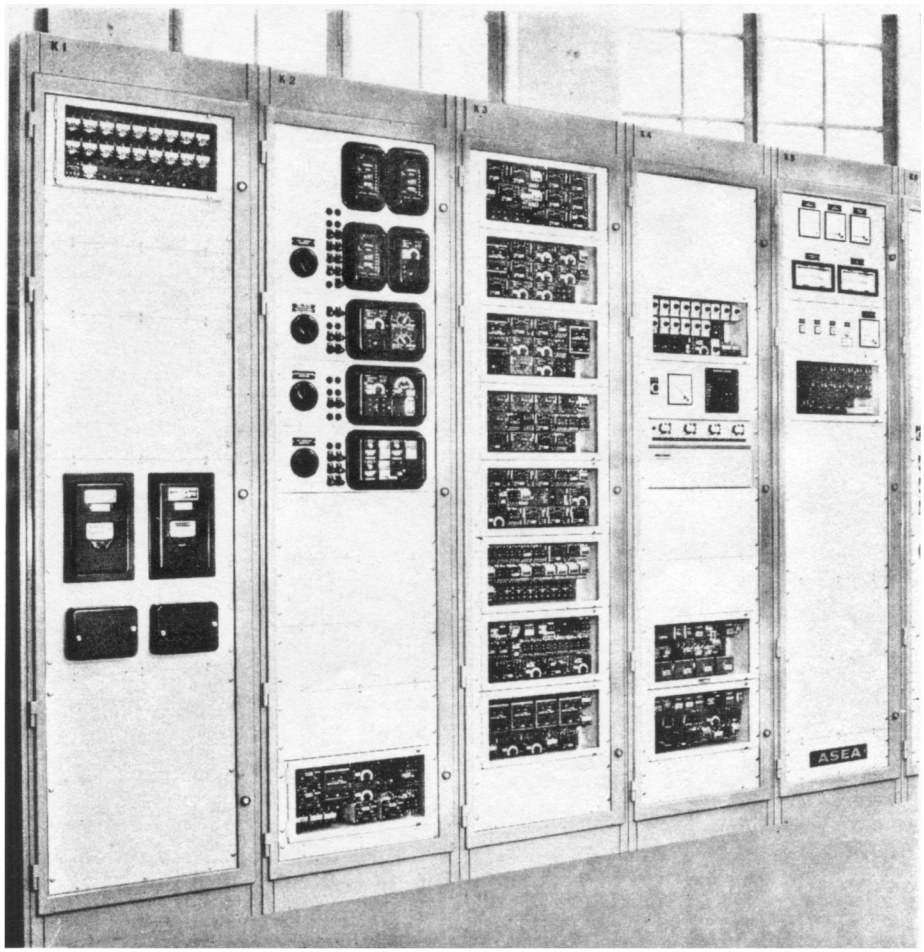

steam turbo-alternator containing design relays.

ASEA

Ordering tables

Symbol: RRIG 2

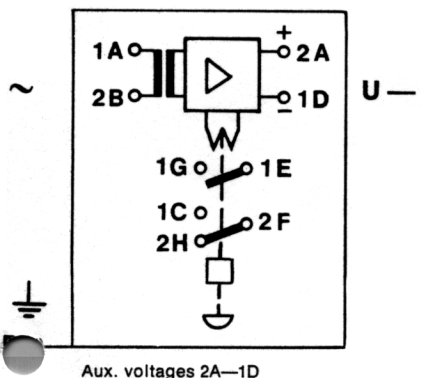

Aux. voltages 2A—1D
24 or 110 V d.c.

Current relay RRIG 2. Standard version

Type RRIG	Scale A	Aux. voltage V d.c. [1]	Overload capacity for measuring circuit [2] Continuous A	Overload capacity for measuring circuit [2] 1 s A	Power consumption for Measuring circuit at lowest setting [3] approx. mVA	Power consumption for Auxiliary voltage circuit approx. W	Cat. No. [4] RK 414. . .
2521	0.01—0.03		0.3	6	7		1521
2522	0.025—0.075		0.75	15	7		1522
2523	0.05—0.15		1.5	30	7		1523
2524	0.1—0.3		3	60	7		1524
2525	0.25—0.75	24	7.5	150	7	2.3	1525
2526	0.5—1.5		15	300	7		1526
2527	1—3		15	500	15		1527
2528	2.5—7.5		15	500	30		1528
2529	5—15		15	500	100		1529
	To order						
2520	0.001—15 A [5]						1520
2571	0.01—0.03		0.3	6	7		1571
2572	0.025—0.075		0.75	15	7		1572
2573	0.05—0.15		1.5	30	7		1573
2574	0.1—0.3		3	60	7		1574
2575	0.25—0.75	110	7.5	150	7	4	1575
2576	0.5—1.5		15	300	7		1576
2577	1—3		15	500	15		1577
2578	2.5—7.5		15	500	30		1578
2579	5—15		15	500	100		1579
	To order						
2570	0.001—15 A [5]						1570

Current relay RRIG 2. Special version with extremely low power consumption

Type RRIG	Scale mA	Aux. voltage V d.c. [1]	Overload capacity for measuring circuit [2] Continuous A	Overload capacity for measuring circuit [2] 1 s A	Power consumption for Measuring circuit at lowest setting [3] approx. mVA	Power consumption for Auxiliary voltage circuit approx. W	Cat. No. [4] RK 414. . . .
2821	0.25—0.75		0.15	2			2821
2822	0.5—1.5		0.3	4			2822
2823	1—3		0.6	8			2823
2824	2.5—7.5		1.5	20			2824
2825	5—15	24	3	40	0.3	2.3	2825
2826	10—30		6	80			2826
2827	25—75		15	200			2827
2828	50—150		15	400			2828
2829	100—300		15	500			2829
	To order						
2820	0.1 mA—1.5 A [5]						2820
2871	0.25—0.75		0.15	2			2871
2872	0.5—1.5		0.3	4			2872
2873	1—3		0.6	8			2873
2874	2.5—7.5		1.5	20			2874
2875	5—15	110	3	40	0.3	4	2875
2876	10—30		6	80			2876
2877	25—75		15	200			2877
2878	50—150		15	400			2878
2879	100—300		15	500			2879
	To order						
2870	0.1 mA—1.5 A [5]						2870

[1] See adjacent symbol. For other aux. voltages see table on p. 7
[2] Plug-in system RR permits max. 15 A continuously and 500 A for 1 sec
[3] Power consumption increases in proportion to the square of the current, P.F. ≈ 1
[4] The device RTNK (RK 788 0051) must be ordered separately from Cat. RK 78-2 E
[5] Scale ratio 1:3. Max 0.5—1.5 A

Symbol: RREG 2

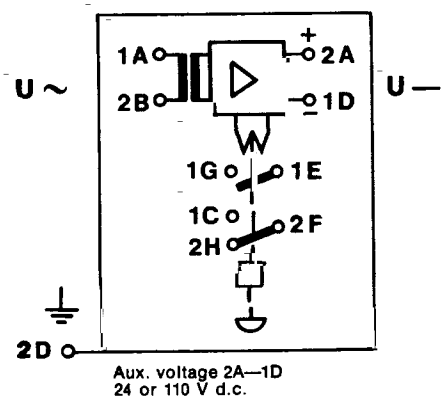

Voltage relay RREG 2

Type RREG	Scale V	Aux. voltage V d.c. [1]	Overload capacity for measuring circuit[2] Continuous V a.c.	Power consumption for: Measuring circuit at lowest setting approx. mVA	Power consumption for: Aux. voltage circuit approx W	Cat. No. RK 414.
2521	5–15		50			0521
2522	10–30		100			0522
2523	20–60		200			0523
2524	40–120	24	400	20	2.3	0524
2525	80–240		500			0525
2526	160–480		500			0526
2520	To order 0.5–500 V[3]					0520
2571	5–15		50			0571
2572	10–30		100			0572
2573	20–60	110	200	20	4	0573
2574	40–120		400			0574
2575	80–240		500			0575
2576	160–480		500			0576
2570	To order 0.5–500 V[3]					0570

[1]) See adjacent symbol. For other aux. voltages see table below
[2]) Max. system voltage 500 V a.c.
[3]) Ratio 1:3. Max. 500 V

Separate resistors for different auxiliary voltages

Aux. voltage	Aux. volt. of relay V	Series resistance ohms	Resistor for min. W	Type MSB	Cat. No. RK 788.
32	24	100	5	54-100	0230
36	24	160	5	54-160	0232
48	24	250	5	54-250	0234
55	24	315	10	104-315	0435
60	24	500	10	104-500	0437
120	110	400	5	54-400	0236
125	110	500	5	54-500	0237
220	110	4000	10	104-4000	0446
240	110	5000	10	104-5000	0447
250	110	5000	10	104-5000	0447

Other voltages on request.

These resistors are listed in Catalogue RK 78-2 E. They are screwed, when fitting, into terminal 1 D at the rear of the case, mounted separately on a steatite block RK 788 0880 or screwed into a plug-in unit.

Cat. RK 41-1 E

Static measuring relays for a.c. type RRIG 2 and RREG 2

Reg. 5623

Printed in Sweden. Tryckcentra AB 10.1970. 5000

Momentana mätande reläer för växelström
Instantaneous measuring relays for a.c.

Indikeringsflagga för strömrelä typ RRIG 2

Relät har en indikeringsflagga som är spärrad vid leverans. Flaggspärren, som täcker flaggan, skall sitta kvar när indikering inte önskas.

När spärren är borttagen blir indikeringsflaggan synlig då utgångsrelät slår till. Flaggan kan inte återställas förrän utgångsrelät slagit från. Detta innebär att indikering kan erhållas ENDAST när relät används som maximalrelä. När relät används som minimalrelä skall flaggspärren vara påsatt. Indikering måste i sådana fall ordnas via separat indikeringsdon.

Vid leverans av relät medföljer en instruktion som visar borttagning och insättning av flaggspärren.

Indicating flag for current relay type RRIG 2

On delivery, the indicating flag of the relay is blocked with a flag locking strip. When indication is not required, the locking strip must not be removed.

When the locking strip has been removed, the indicating flag will be visible when the relay picks up. The flag cannot be reset until the output relay has dropped out. This implies that indication can ONLY be obtained when the relay is being used as an overcurrent relay. When used as an undercurrent relay, the flag locking strip must be in place. In such cases, indication must be arranged via a separate indicating device.

Instruction pertaining to removal and replacement of the flag locking strip are sent with the relay.