June 1995
Supersedes Descriptive Bulletin 41-358S, pages 1-2, dated October 1993
Mailed to: E, D, C/41-300B

Three Phase, or Single Phase
Device Number: 87

CIRCUIT SHIELD®

Type 87M Percentage Differential Relay

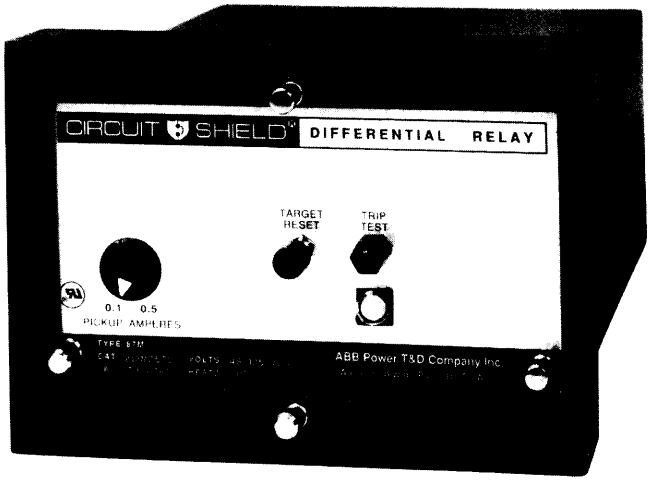

Application

The Type 87M provides fast, sensitive differential protection for AC motors and generators.

The relay has a non-linear percentage differential characteristic which allows operation for faults as low as 0.1 ampere, but provides security against misoperation on external faults. In addition, this characteristic reduces the requirements on current transformer accuracy and transient response since it requires more operating current as the restraint current magnitude becomes large.

The Type 87M is available as a single-phase relay in the totally drawout Test Case style or as a three-phase unit in the Standard Case style. The three-phase unit is especially attractive when panel space is limited.

Three-phase relays require an external, surface mounted reactor package. The reactor is built into the relay on single-phase units. The reactor is connected in series with the operating coil. It acts as a stabilizing impedance to prevent nuisance operations of the relay that might occur due to poor performance of the current transformers, for example on high-inrush load conditions.

Since frequency response characteristic is fairly flat the Type 87M may be used on 25 Hz systems as well as 50 or 60 Hz.

For a self-balancing machine differential scheme, see the GRD relay (DB 41-351S) used with Type GS sensors, or the Type 50D (DB 41-112S) used with a conventional zero-sequence window current transformer.

Features

- Fast, sensitive protection
- Adjustable pickup
- Low burden
- Seismic capability to 6g ZPA
- Built-in test
- Transient immunity
- 2-year warranty
- UL recognized

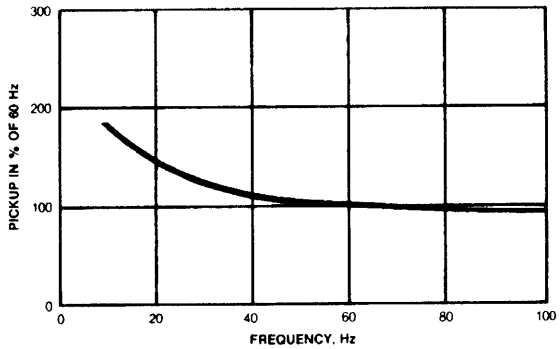

TYPICAL FREQUENCY RESPONSE

Specifications

Sensitivity:	0.1 to 0.5 amperes (25 to 60 Hz)
Restraint Circuit Ratings:	
Continuous	12 amperes
One Second	300 amperes
Burden	0.25 VA at 5A
Operating Circuit Ratings:	
Continuous	5 amperes
One Second	200 amperes
Burden	1.0 VA at 5A
Control Power:	48/125 Vdc at 0.035 A Drain 48/110 Vdc at 0.035 A Drain 24/32 Vdc at 0.050 A Drain 250 Vdc at 0.035 A Drain
Output Circuit:	1 normally open contact; 1 selectable normally open or normally closed
Output Circuit Rating:	Each contact at 125 Vdc 30 amps. Tripping Duty 5 amps. Continuous 1 amp. Opening Resistive 0.3 amp. Opening Inductive
Operating Temperature:	Minus 20°C to plus 70°C
Transient Immunity:	More than 2500V, 1 MHz bursts at 400 Hz repetition rate, continuous (ANSI C37.90A SWC); Fast Transient Test; EMI Test
Seismic Capability:	More than 6g ZPA either Axis biaxial broadband multifrequency vibration without damage or malfunction ANSI/IEEE C37.98
Settings Required:	Sensitivity adjustment is factory set at 0.25A; may be adjusted from 0.1 to 0.5A
Dielectric:	2000 Vac rms 1 min. all circuits to ground
Weight:	Unboxed — 4.5 lbs. (2.0 Kg) Boxed — 5.2 lbs. (2.3 Kg) — 0.26 Cubic Feet

How to Specify

Relay shall be Asea Brown Boveri Type 87M or equal. Relay shall have adjustable sensitivity 0.1 to 0.5 amperes. Relay shall be capable of withstanding up to 6g ZPA seismic stress without malfunction. A magnetic operation indicator which retains position on loss of control power shall be provided. Built-in means shall be provided to allow operational tests without additional equipment.

How to Order

For a complete listing of available differential relays, see TD 41-025. To place an order, or for further information, contact the nearest ABB Representative.

Further Information

List Prices: PL 41-020
Technical Data: TD 41-025
Instruction Book: IB 7.6.1.7-1
Motor Protection Guide: 41-205M
Other Protective Relays:
Application Selector Guide, TD 41-016

Type 87M Connections With Reactor Package

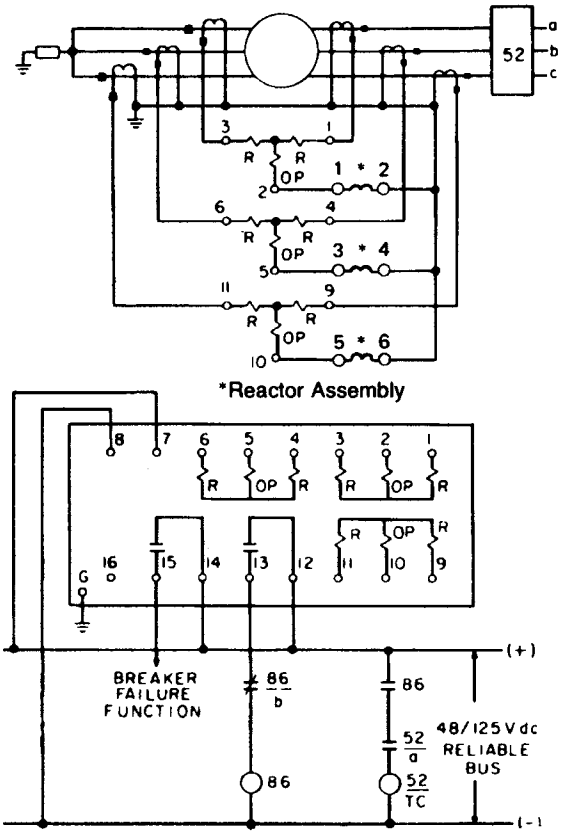

NOTE: FOR TYPE 87M SINGLE PHASE RELAY CONNECTIONS, REFER TO INSTRUCTION BOOK IB 7.6.1.7-1.

Percentage Differential Characteristics

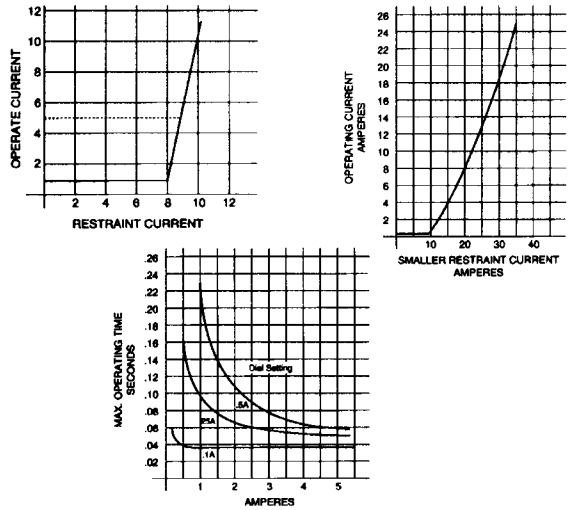

Printed In U.S.A.

June 1995
Supersedes Descriptive Bulletin 41-358S, page 3, dated October 1993
Mailed to: E, D, C/41-300B

Three Phase: Standard Case
Single Phase: Drawout Test Case
50/60 Hz, Non-linear Slope
Sensitivity: 0.1-0.5A

CIRCUIT SHIELD®

Type 87M Percentage Differential Relay

Type	Application	Phases	Internal Connections	Control Voltage	Catalog Number Std Case	Catalog Number Test Case
87M	Machine	3	16D219B	48/125 Vdc	219M2570	.....
				24/32 Vdc	219M2590	.....
				48/110 Vdc	219M2500	.....
				220 Vdc	219M2520	.....
				250 Vdc	219M2550	.....
		1	16D419B	48/125 Vdc	.....	419M6570
				24/32 Vdc	.....	419M6590
				48/110 Vdc	.....	419M6500
				220 Vdc	.....	419M6520
				250 Vdc	.....	419M6550
Reactor Assembly		3	6S219M	.....	200C0002	.....

Note: The three-phase Type 87M requires a separately mounted 3Ø reactor assembly. The single-phase model has the reactor mounted internally to the relay.

Internal Connection Diagrams

16D219B Type 87M
Machine Differential Relay
Three Phase: Standard Case

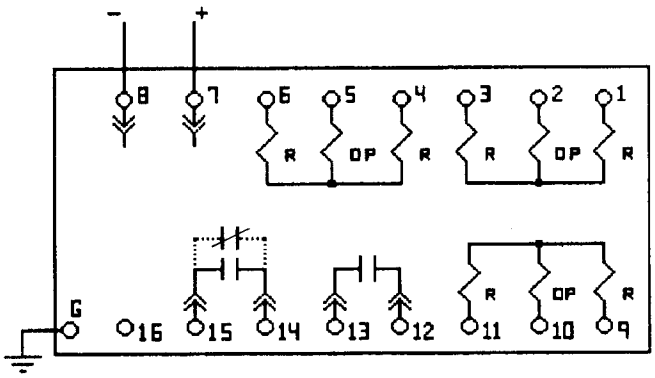

16D419B Type 87M
Machine Differential Relay
Single Phase: Drawout Test Case

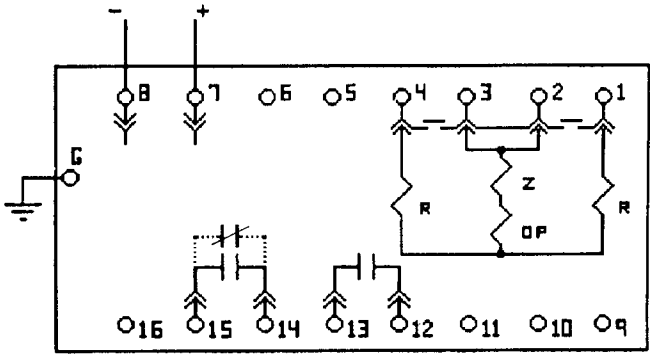

R = RESTRAINT WDG.
OP = OPERATE COIL
Z = REACTOR WDG.
CONTACT 14-15 CONVERTIBLE
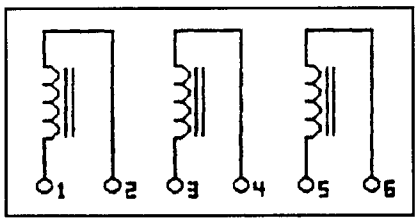
6S219M
Reactor Assembly, 3Ø
Surface Mounted