We reserve all rights in this document and in the information contained therein. Reproduction, use or disclosure to third parties without express authority is strictly forbidden. Copr. ABB AB

Table of contents

Part of product	Sheet
Designation for 6U, 1/2x19" casing with 1 TRM slot	2
Designation for 6U, 1/2x19" casing with 1 TRM slot and 1 AIM slot	3
Communication module (COM)	4
Power supply module 48–125 VDC (PSM)	5
Power supply module 110–250 VDC, 100–240 VAC (PSM)	6
Transformer module (TRM)	7
Analog input module (AIM)	8
Binary input/output module (BIO)	9

We reserve all rights in this document and in the information contained therein. Reproduction, use or disclosure to third parties without express authority is strictly forbidden. Copr. ABB AB

1/2x19"

Rear view slot

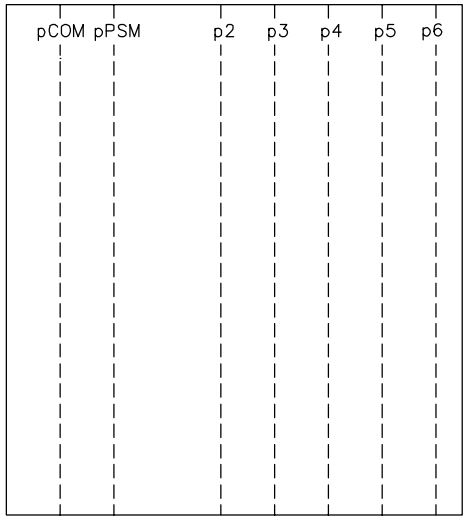

p= Position

Rear view terminal

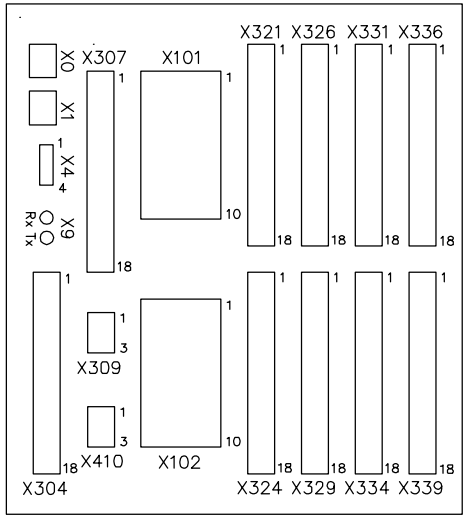

Designation for 6U, 1/2x19" casing with 1 TRM

Module	Slot	Terminal
COM	pCOM	X0, X1, X4, X9, X304
PSM	pPSM	X307. X309, X410
TRM	p2	X101, X102
BIO	p3	X321, X324
BIO	p4	X326, X329
BIO	p5	X331, X334
BIO	p6	X336, X339

Based on	Prepared 2010-05-12 Agneta Rydh	Title Connection Diagram 650 series ANSI symbols	Doc.des. Doc.kind	Ref.des.	
	Approved 2011-12-08 Patrik Nyback		Resp.dept. PSTP/TPLA	Rev.ind. C	Lang. en
	Project	ABB AB	Doc.No. 1MRK006502-AB		Sheet 2 / Cont. 3
Rev | Rev. Note | Date | Name					

We reserve all rights in this document and in the information contained therein. Reproduction, use or disclosure to third parties without express authority is strictly forbidden. Copr. ABB AB

1/2x19"

Rear view slot

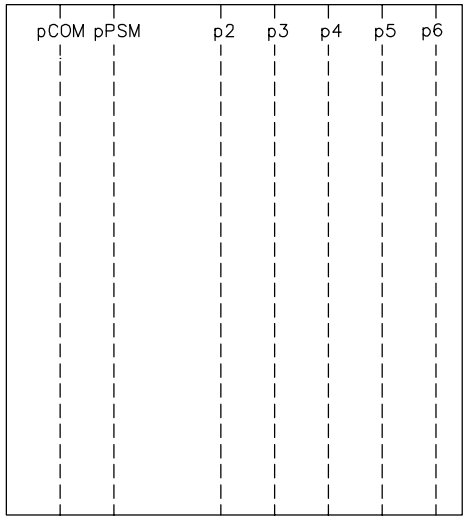

p= Position

Rear view terminal

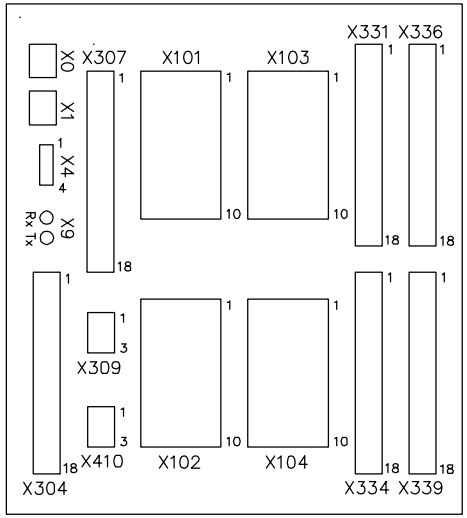

Designation for 6U, 1/2x19" casing with 1 TRM and 1 AIM

Module	Slot	Terminal
COM	pCOM	X0, X1, X4, X9, X304
PSM	pPSM	X307, X309, X410
TRM	p2	X101, X102
AIM	p4	X103, X104
BIO	p5	X331, X334
BIO	p6	X336, X339

Based on	Prepared 2010-05-17 Agneta Rydh	Title Connection Diagram 650 series ANSI symbols	Doc.des. Doc.kind	Ref.des.	
	Approved 2011-12-08 Patrik Nyback		Resp.dept. PSTP/TPLA	Rev.ind. C	Lang. en
	Project	ABB AB	Doc.No. 1MRK006502-AB		Sheet 3 / Cont. 4
Rev Rev. Note Date Name					

We reserve all rights in this document and in the information contained therein. Reproduction, use or disclosure to third parties without express authority is strictly forbidden. Copr. ABB AB

Communication module (COM)

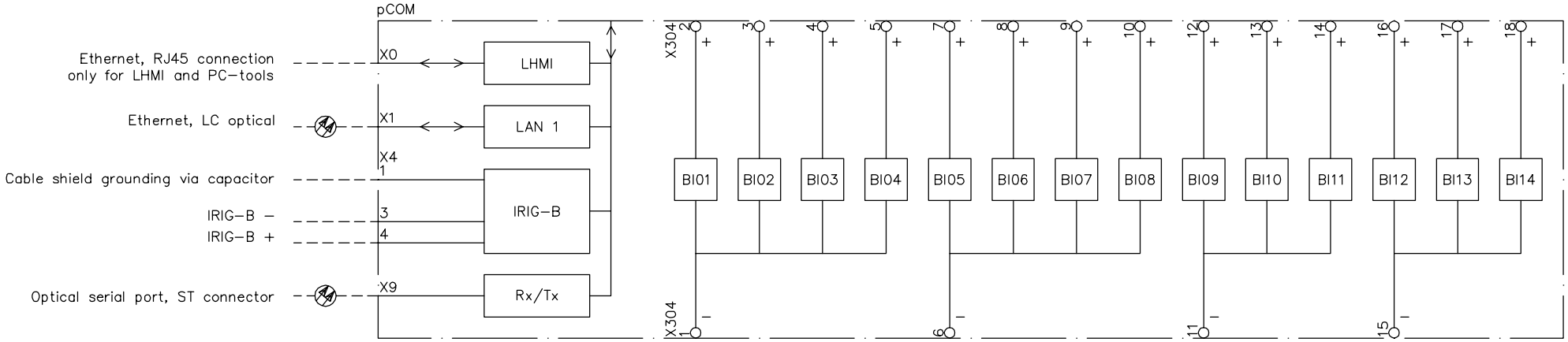

Observe polarity sequence

Configuration plant adapted		
BI01	Configuration	
BI02	Configuration	
BI03	Configuration	
BI04	Configuration	
BI05	Configuration	
BI06	Configuration	
BI07	Configuration	
BI08	Configuration	
BI09	Configuration	
BI10	Configuration	
BI11	Configuration	
BI12	Configuration	
BI13	Configuration	
BI14	Configuration	

Based on	Prepared 2010-08-03	Agneta Rydh	Title Connection Diagram 650 series ANSI symbols
	Approved 2011-12-08	Patrik Nyback	
	Project		
Rev / Rev. Note / Date / Name			ABB AB

Doc.des.	Doc.kind	Ref.des.	
Resp.dept. PSTP/TPLA	Rev.ind. C	Lang.	en
Doc.No. 1MRK006502-AB		Sheet	4
		Cont.	5

We reserve all rights in this document and in the information contained therein. Reproduction, use or disclosure to third parties without express authority is strictly forbidden. Copr. ABB AB

Power supply module 48–125 VDC (PSM)

pPSM

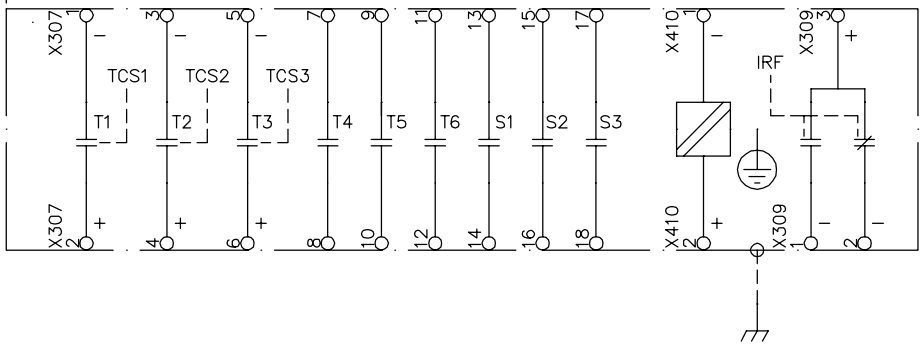

Observe polarity sequence

Configuration plant adapted

T1 Configuration

T2 Configuration

T3 Configuration

T4 Configuration

T5 Configuration

T6 Configuration

S1 Configuration

S2 Configuration

S3 Configuration

Auxiliary supply EL

Protective earth

Normal

Fail

Based on			Prepared 2010-08-08	Agneta Rydh	Title Connection Diagram 650 series ANSI symbols	Doc.des. Doc.kind	Ref.des.
			Approved 2011-12-08	Patrik Nyback		Resp.dept. PSTP/TPLA	Rev.ind. C	Lang. en
			Project		ABB AB	Doc.No. 1MRK006502-AB	Sheet 5 / Cont. 6
Rev	Rev. Note	Date	Name				

We reserve all rights in this document and in the information contained therein. Reproduction, use or disclosure to third parties without express authority is strictly forbidden. Copr. ABB AB

Power supply module 110–250 VDC, 100–240 VAC (PSM)

pPSM

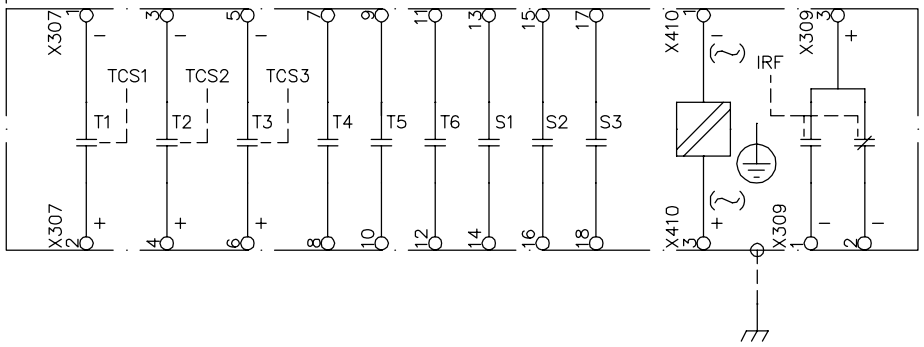

Observe polarity sequence

Configuration plant adapted

T1 Configuration

T2 Configuration

T3 Configuration

T4 Configuration

T5 Configuration

T6 Configuration

S1 Configuration

S2 Configuration

S3 Configuration

Auxiliary supply EL

Protective earth

Normal

Fail

Based on				Prepared 2010-08-08	Agneta Rydh	Title Connection Diagram 650 series ANSI symbols	Doc.des. Doc.kind
				Approved 2011-12-08	Patrik Nyback		Ref.des.
				Project			Resp.dept. PSTP/TPLA
Rev	Rev. Note	Date	Name			ABB AB	Doc.No. 1MRK006502-AB

Rev.ind.	C
Lang.	en
Sheet	6
Cont.	7

We reserve all rights in this document and in the information contained therein. Reproduction, use or disclosure to third parties without express authority is strictly forbidden. Copr. ABB AB

Transformer module (TRM)

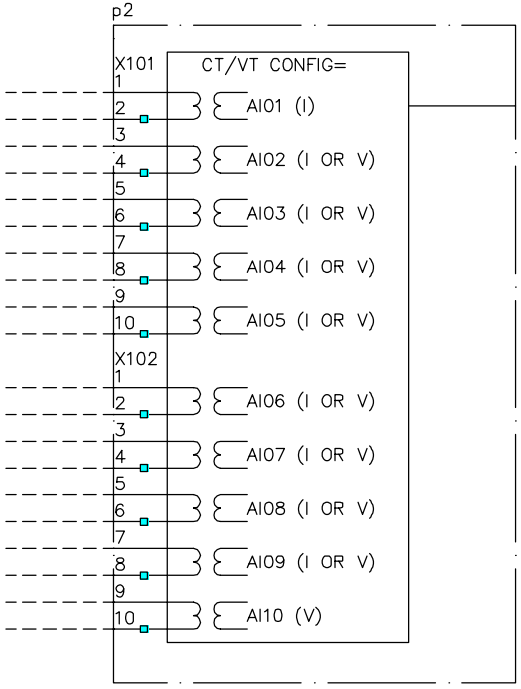

Designation corresponding to Transformer module			
CT/VT input designation	Current/voltage configuration		
	6I+4U	8I+2U	4I+1I+5U
AI01	1/5A	1/5A	1/5A
AI02	1/5A	1/5A	1/5A
AI03	1/5A	1/5A	1/5A
AI04	1/5A	1/5A	1/5A
AI05	1/5A	1/5A	0.1/0.5A
AI06	1/5A	1/5A	100–220V
AI07	100–220V	1/5A	100–220V
AI08	100–220V	1/5A	100–220V
AI09	100–220V	100–220V	100–220V
AI10	100–220V	100–220V	100–220V

Compression or ringlug terminals

- Indicates polarity mark. Note that internal polarity can be adjusted by setting of analog input CT neutral direction and or on SMAI pre–processing function blocks.

Based on		Prepared 2010–08–04	Agneta Rydh	Title Connection Diagram 650 series ANSI symbols	Doc.des.	Doc.kind	Ref.des.
		Approved 2011–12–08	Patrik Nyback		Resp.dept. PSTP/TPLA	Rev.ind. C	Lang. en
		Project		ABB AB	Doc.No. 1MRK006502–AB		Sheet 7 / Cont. 8
Rev	Rev. Note	Date	Name				

We reserve all rights in this document and in the information contained therein. Reproduction, use or disclosure to third parties without express authority is strictly forbidden. Copr. ABB AB

Analog input module (AIM)

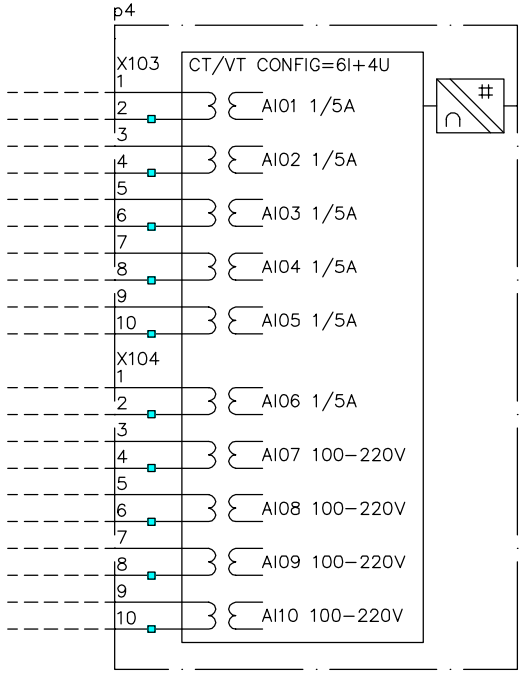

Compression or ringlug terminals

- Indicates polarity mark. Note that internal polarity can be adjusted by setting of analog input CT neutral direction and or on SMAI pre–processing function blocks.

Based on	Prepared 2010–08–04 Agneta Rydh	Title Connection Diagram 650 series ANSI symbols	Doc.des. Doc.kind	Ref.des.	
	Approved 2011–12–08 Patrik Nyback		Resp.dept. PSTP/TPLA	Rev.ind. C	Lang. en
Rev | Rev. Note | Date | Name	Project	ABB AB	Doc.No. 1MRK006502–AB		Sheet 8 / Cont. 9

We reserve all rights in this document and in the information contained therein. Reproduction, use or disclosure to third parties without express authority is strictly forbidden. Copr. ABB AB

Binary input/output module (BIO)

pN

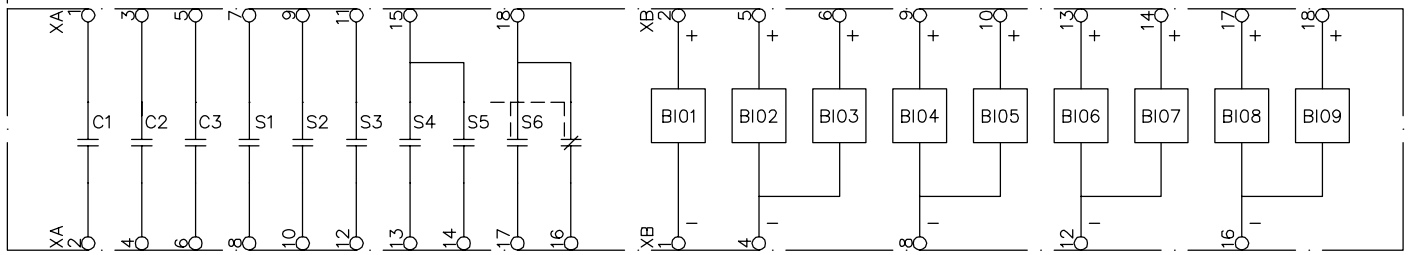

Designation in correspondence to the position in the rack		
pN=	XA=	XB=
p3	X321	X324
p4	X326	X329
p5	X331	X334
p6	X336	X339

Observe polarity sequence

Configuration plant adapted

C1	Configuration
C2	Configuration
C3	Configuration
S1	Configuration
S2	Configuration
S3	Configuration
S4	Configuration
S5	Configuration
S6	Configuration
BI01	Configuration
BI02	Configuration
BI03	Configuration
BI04	Configuration
BI05	Configuration
BI06	Configuration
BI07	Configuration
BI08	Configuration
BI09	Configuration

Based on		Prepared 2010-08-08	Agneta Rydh
		Approved 2011-12-08	Patrik Nyback
		Project	
Rev	Rev. Note	Date	Name

Title: Connection Diagram
650 series
ANSI symbols

ABB AB

Doc.des. — Doc.kind
Ref.des.
Resp.dept. PSTP/TPLA
Rev.ind. C
Lang. en
Sheet 9
Cont. –
Doc.No. 1MRK006502-AB