Graphical configuration tool according to IEC 1131

CAP 531*1.3

1MRK 511 056-BEN
Page 1
Issued May 1999
Changed since July 1998
Data subject to change without notice

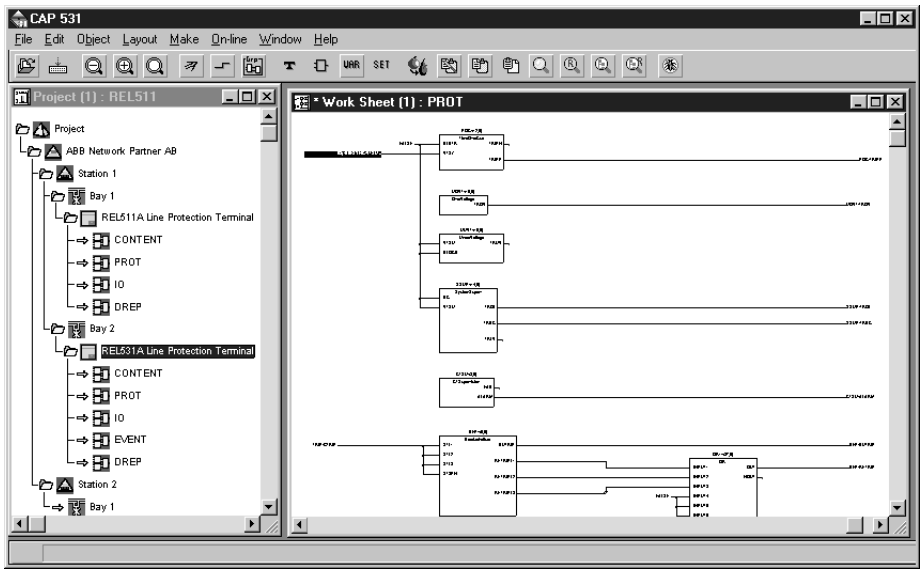

Features

- Graphical stand-alone tool for configuration of 500-series terminals
- Used for both protection and control terminals
- Based on international standard IEC 1131-3
- Utilizes standard PC with MS Windows
- Provides a graphical overview of the internal connections of the terminals
- User-friendly navigation
- Automatic down-loading of the configurations directly to the terminal makes safe engineering work
- Direct documentation of the configuration
- Easy to change default configuration
- Timers and user-defined names are programmed directly in the configuration
- Monitoring all internal signals on-line facilitates commissioning

Application

The graphical configuration tool is used through all stages of a project, from engineering to testing, commissioning, documentation and maintenance. The tool can be used for adjusting the default configuration, or for making a completely new configuration from scratch.

The engineering work is done off-line in the PC. The configuration is prepared and tested before the commissioning.

The default configuration in the terminals are easily adapted to the customer’s needs. The configuration consists of function blocks, logic gates, and timers. The functions blocks included in a terminal are available in a library of functions, where the engineer can pick a function and connect it according to the requirements.

The tool offers a compilation check that helps the engineer to make a correct configuration.

The monitoring function offers an on-line check of all internal signals in a 500-terminal. This functions offers a window into the terminal, where the commissioner can see all changes in signal status. With this tool, the commissioner obtains a powerful help.

The tool is used by the protection engineer that for example adapts the scheme communication logic in a line protection to the customer’s requirements.

Application (cont'd)

The tool is also used by the control system constructor that for example adapts the interlocking logic to the switchgear configuration of the station.

The configuration can be printed on a user-defined form which gives documentation of the configuration that matches the terminal completely.

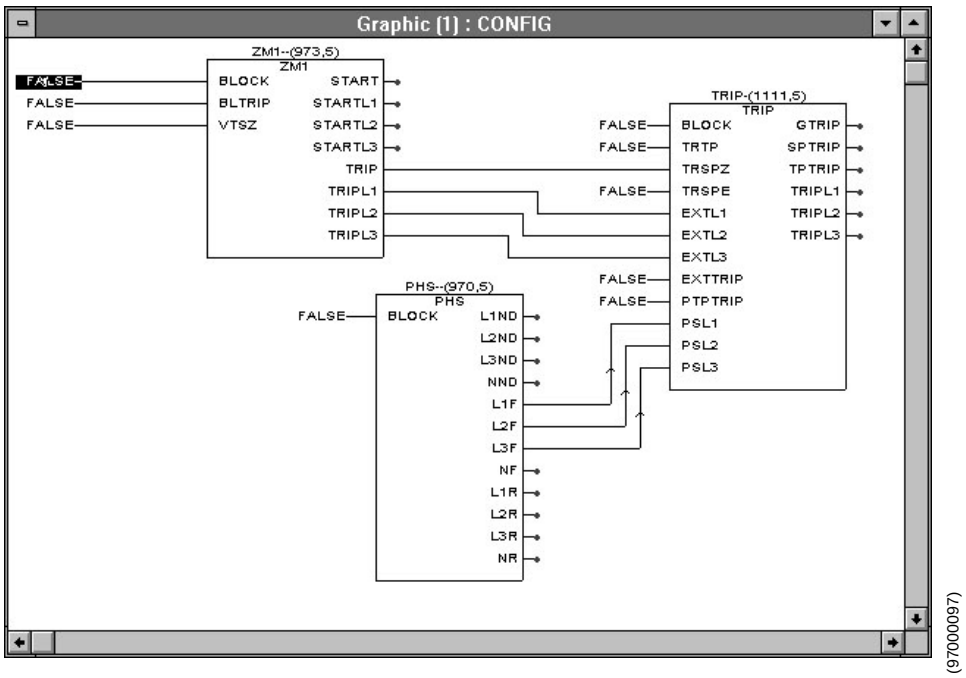

Fig. 1 Example of configuration of a REL 531 line protection terminal

Design

The design of the configuration tool is modular, with a base tool – CAP 531, and library modules for each type of terminal used. When a new type of terminal is used, you add the new CAP library module.

The network structure presented in the navigator is freely programmable and can also be imported from SMS.

The configuration work is facilitated by the drag-and-drop technique. Both mouse and keyboard short-cuts can be used.

When the configuration work is completed, the files are down-loaded directly into the terminal through the PC port on the front of the terminal, or through the SMS port on the rear of the terminal.

The monitoring function uses on-line communication to open up a window into the terminal. The internal signals are presented on-line with their present values (true or false) directly in the configuration work sheet. The digital value is shown with colours (red or blue) which gives excellent overview of the status of the internal signals in the terminal.

(SE940702)

Fig. 2 Example of connection to the terminal

Technical data

The PC shall comply to the following recommended requirements:

- 100% IBM compatible running DOS 5.0
- 486 processor or higher (pentium recommended)
- 66 MHz or higher
- 16 Mb RAM or more available
- 10 Mb disk space available
- VGA compatible monitor, min. resolution 800 x 600
- MS-Windows 3.11, Windows 95 or Windows NT 4.0

Ordering

Specify:

- Type designation and ordering numbers
- Quantity
- End user of the software:
  Name, company and address

Type designation	Terminal version	Ordering No.
CAP 531	–	1MRK 000 876-KB
CAP/REL 501 v1.2	1.2	1MRK 000 876-AB
CAP/REL 511 v1.2	1.2	1MRK 000 876-BB
CAP/REL 521 v1.2	1.2	1MRK 000 876-CB
CAP/REL 531 v1.0	1.0	1MRK 000 876-GA
CAP/REL 551 v1.2	1.2	1MRK 000 876-DB
CAP/REL 561 v1.2	1.2	1MRK 000 876-EB
CAP/REB 551 v1.2	1.2	1MRK 000 876-FB
CAP/REC 561 v1.0	1.0	1MRK 000 876-HA
CAP/REC 561 v1.1	1.1	1MRK 000 876-HB
CAP/RET 521 v2.1	2.1	1MRK 000 876-LC
CAP/REx 500 v2.0	2.0	1MRK 000 876-PA

References

Panorama Station Automation 1MRK 500 016-BEN

See the Buyer's Guide for each terminal in the REx 5xx series.

Manufacturer

ABB Automation Products AB
Substation Automation Division
S-721 59 Västerås
Sweden
Tel: +46 21 342000
Fax: +46 21 146918