ASEA BROWN BOVERI

ABB Relays

Type REG 100

Microprocessor based generator protection

B03-4021[E]

Page 1
March 1989
Changed since January 1989
Data subject to change without notice

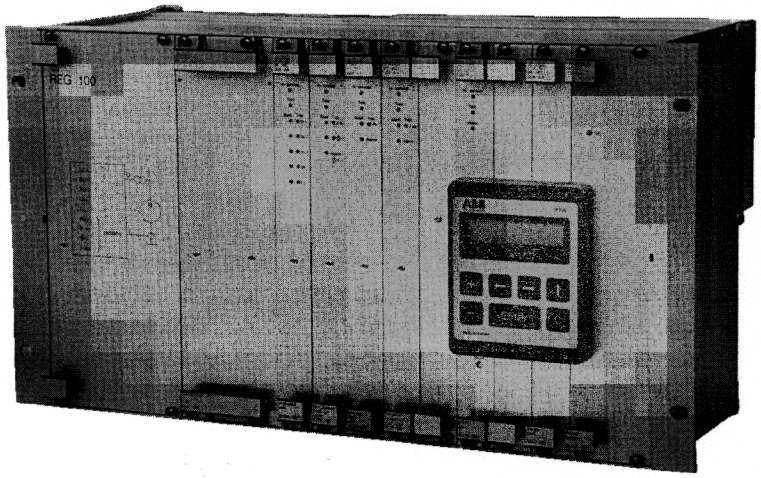

(SE900261)

Abstract

- **Protection functions included:**
  - **Phase short-circuit**
  - **Stator ground-fault**
  - **Over-voltage**
  - **Under-voltage**
  - **Negative sequence current (optional)**
  - **Loss-of-excitation (optional)**
  - **Reverse power (optional)**
  - **Rotor ground-fault (optional)**
- **Software programming of the individual trip functions to four output trip relays**
- **Alarm relay with potential-free contact for each individual protection function**
- **Dipswitch programming of start or trip function to the signal relays**
- **Versatile Man-Machine-Communication from the relay front panel with numerical presentation of setting, service and trip values on a display**
- **Wide setting ranges with high accuracy of pick-up values and time delays**
- **Digital settings in per unit values of generator rated currents and voltages**
- **Extensive self-supervision of internal circuits and software**
- **Continuous monitoring of auxiliary external and internal voltages**
- **Stand-alone modules giving high dependability**
- **Auxiliary voltage ranges 48–60, 110–125 or 220–250 V dc, ± 20 %**
- **Easy commissioning and testing**
- **Highly insensitive to electrical interference and mechanical shocks**
- **Compact**

Application

The basic version of REG 100 is used for small synchronous and asynchronous generators. For larger machines, optional functions are added by inserting additional plug-in units. Separate differential relays can be included, which further increase the dependability of the generator protection system.

The stator ground fault protection comprises both neutral voltage and zero-sequence current measuring circuits. The latter is used for generators directly connected to a distribution bus.

The under-voltage protection can be programmed to seal in on over-current start. In this way, a reliable phase short-circuit protection is obtained even when the short-circuit current is reduced to a low value within the set time delay of the protection.

For the phase short-circuit over-current protection, normal inverse or independent time lag characteristics can be selected.

Design

REG 100 is supported in a 19″ equipment frame with a height of 6S (226 mm). All external connections are made with standard COMBIFLEX terminal sockets. The RTXP 24 test switch is covered by a front plate. Below the test switch, a relay terminal base is mounted with spare space for a one seat relay. Two mother boards mounted at the back of the equipment frame provide the internal connections between the plug-in units.

Design (cont'd)

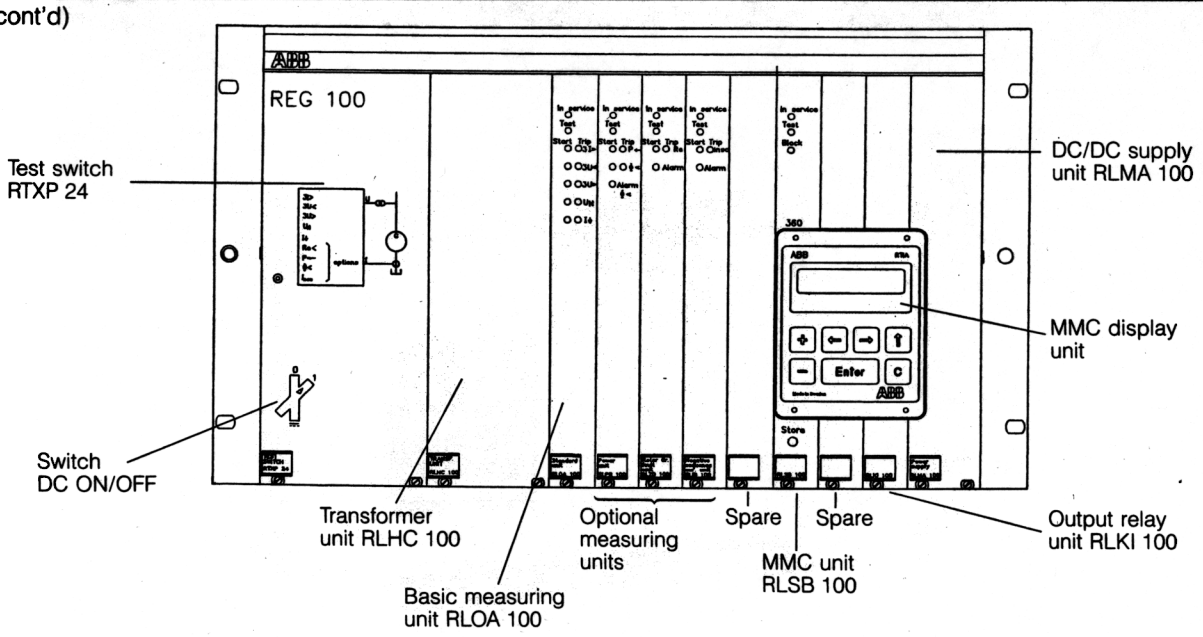

Fig. 1 REG 100 with optional units

The transformer unit RLHC 100 is used to reduce the external inputs to a suitable level for use in the measuring circuits and to isolate the measuring circuits galvanically from the external circuits.

The measuring unit RLOA 100 provides the protection functions included in the basic version of REG 100:

phase over-current (s/c)
over-voltage
under-voltage
neutral voltage } stator
zero-sequence current } ground-fault

The input signals from the transformer unit are passed through analogue filters and then transformed to dc voltages in RMS-converters. The dc voltages are multiplexed sequentially to the microprocessor, in which A/D conversion and comparison with set values are made. The setting parameters are stored in an internal EEPROM of the microprocessor.

The measuring unit contains all the necessary hard- and software to make it perform the protection functions in accordance with the set operating parameters, independently of the other measuring units and the MMC unit. Self-supervision is performed continuously, comprising

- the normal microprocessor watchdog function
- Read-Write-Read-Write cycling of memory cells and internal registers
- check of the A/D-converter
- checksum verification of the program memory and setting parameters stored in the EEPROM

Optional units

- RLPB 100 with reverse power and loss-of-excitation protection function
- RLZD 100 with rotor ground fault protection function
- RLIB 100 with negative sequence current protection function

In these units, the measurements involve instantaneous values of currents, voltages and angles between voltages and currents as required by the measuring function performed.

The design of the measuring and supervisory system is in principle the same for the optional units as for the basic measuring unit.

Light Emitting Diodes (LED's) on the front of the individual measuring units indicate:

- in service
- test mode
- start, trip

Detailed information, e.g. faulted phases, fault current magnitude etc. is transferred to the MMC unit and is available on the MMC display unit, see below.

Space is available in the rack for a total of 5 measuring units. The units can be placed at will within the allocated space.

MMC-system
The man-machine communication (MMC) system in REG 100 is as far as possible, separated from the measuring system. It contains the following major parts:

1. RLSB 100 – MMC-unit
2. RTIA – MMC-terminal
3. Star-structured serial-bus
4. Software to establish a reliable communication between RLSB 100 and other units in REG 100

RLSB 100 is the master in the MMC-system. It identifies installed units and establishes a cyclic poll of all units. When a command is entered via RTIA, RLSB 100 uploads necessary information from the measuring units (settings, service values etc).

If a start and/or trip occurs within a measuring unit, the unit reports a change in status during the cyclic poll. RLSB 100 then automatically uploads the information related to this event and transfers it to the RTIA unit.

The MMC Display unit RTIA is plugged into the front of the RLSB 100 unit. It is used to set the relay, select the various options and present information to the operator, see Fig. 2 below.

(880364)

Fig. 2 Display unit RTIA.

The choice of operating modes and selection of individual parameters within the modes is made by depressing pushbuttons on the front of the RTIA unit.

When entering a new setting, the push-button "STORE" must be operated. This ensures that settings can not be unintentionally changed.

The output relay unit RLKI 100 contains four tripping relays and 12 alarm relays with programming switches.

The trip output from the individual protection functions to the appropriate tripping relay(s) is programmed on the RTIA display unit and stored in the EEPROM of the individual measuring units. The trip circuits are provided with impulse holding.

One alarm relay is allocated to each individual protection function, and by means of the programming switches, the start or the trip function can be selected to operate the relay, see Fig. 3. The rotor ground fault and negative phase sequence protection function, have an extra alarm relay without programming switches. One relay is used for alarm in case of an internal relay fault.

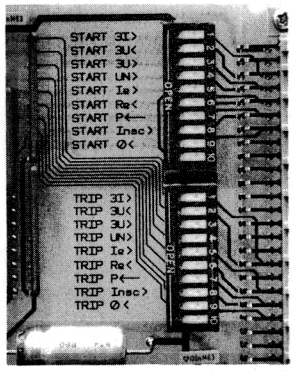

(880574)

Fig. 3 Programming switches for alarm relays.

The voltage injection unit for the rotor ground-fault protection function is mounted separately, on an apparatus plate. The apparatus plate is placed in a GKB 855 box enclosure or inside one of the cubicles of the excitation system equipment.

Measuring functions
The measuring functions of the individual units are shown in the logical diagrams below. In the symbol for the trip matrix, t_d indicates prolongation of the trip impulse. The programming switches in the alarm circuits are switches located in the RLKI 100 output unit (see Fig. 3). The trip matrix can, according to the chosen programming, connect the trip impulse to any of the four trip output relays in unit RLKI 100.

Notes
P <--- Reverse power (Fig. 9). Timer t_h is provided to secure operation if the output of the reverse power measuring element resets due to a power swing. The unit will operate if the reverse

Design (cont'd)

power element picks up again when the set operating time has elapsed before the time set on timer t_h has elapsed.

Φ < Loss-of-excitation (Fig. 12)
Timer t_{en1} and timer t_{en2} are included to prevent an unwanted trip in case of external short-circuits if this occurs when the machine is run underexcited in the region where Iα operates.

The time delay is set sufficiently long to ensure that the Iα function resets before the O/C or U/V release is given in this case.

Timer t_2 is included to ensure trip in case of loss-of-excitation when the machine is run at extremely low active load.

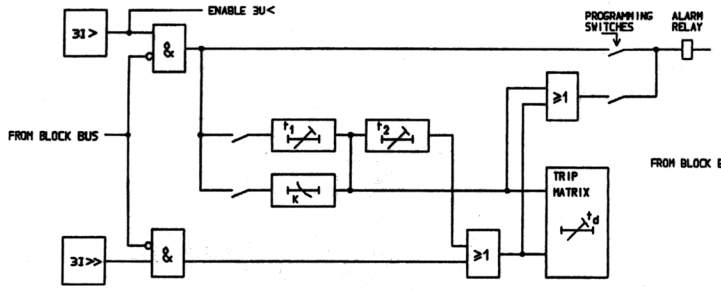

Fig. 4 3I > 3-phase O/C

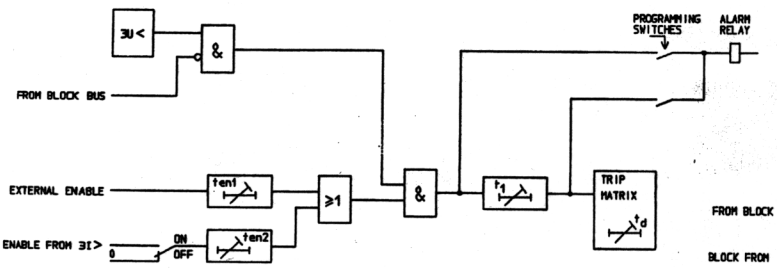

Fig. 5 3U < 3-phase U/V

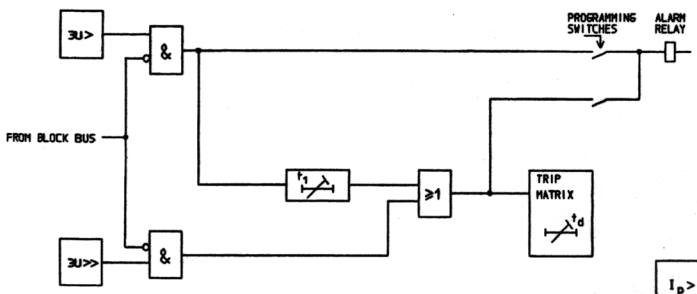

Fig. 6 3U > 3-phase O/V

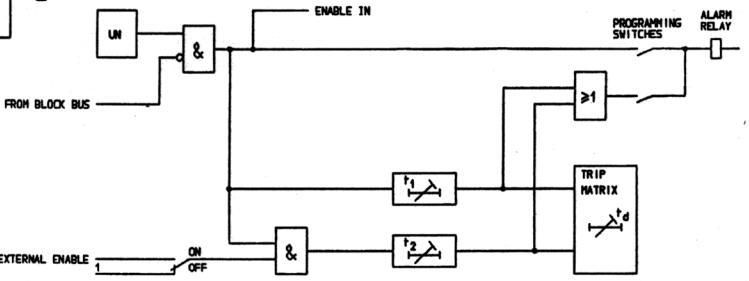

Fig. 7 UN Stator ground fault

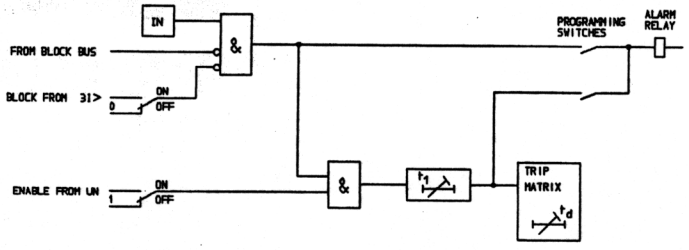

Fig. 8 IN Stator ground fault

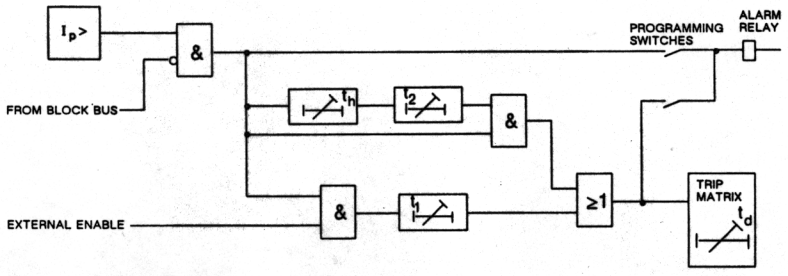

Fig. 9 P <--- Reverse power

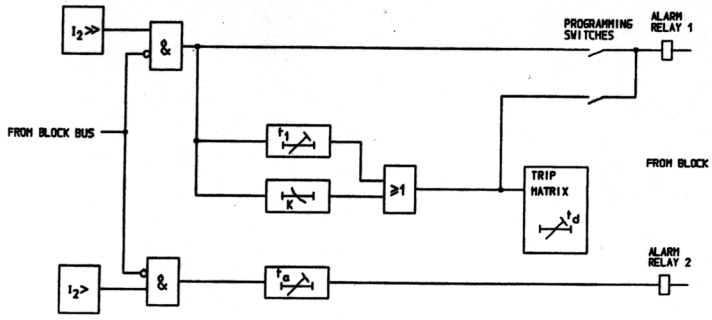

Fig. 10 I_{nsc} > Negative phase sequence current

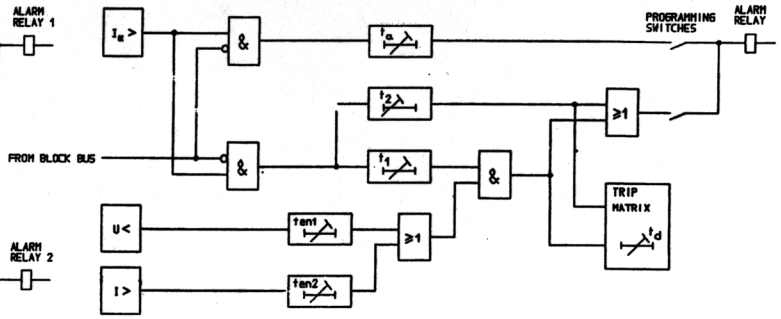

Fig. 12 Φ < Loss-of-excitation

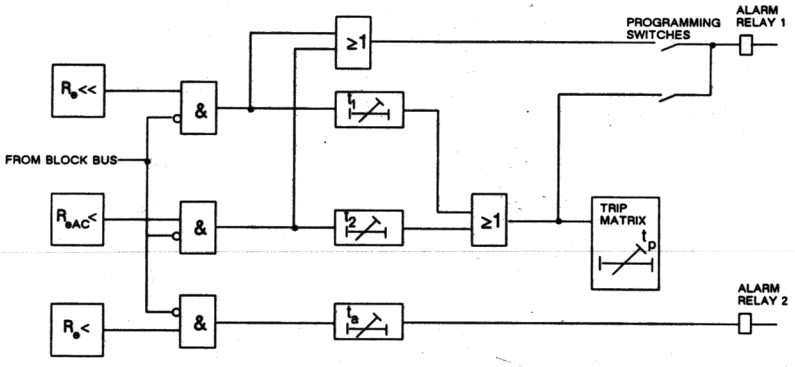

Fig. 11 R_e < Rotor ground fault

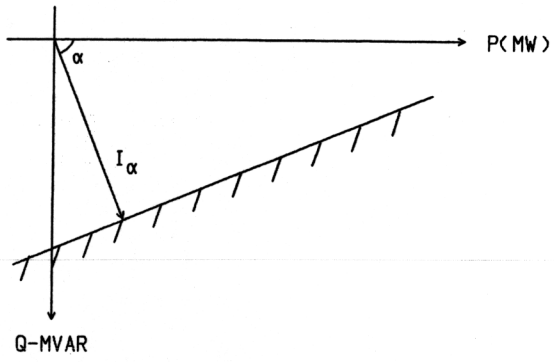

Fig. 13 Setting of Iα >

Technical data

Rated phase current I_n	1, 2 or 5 A
Basic phase current I_b	(0.4–1.1) x I_n
Rated ground current IN_n	2, 5, or *25* mA
Rated voltage between phases U_n	110 V
Basic voltage between phases U_b	(0.7–1.1) x U_n
Rated neutral point voltage UN_n	240 V
Basic neutral point voltage UN_b	(0.25–1.1) x UN_n
Rated frequency	50–60 Hz
Auxiliary voltage	48–60, 110–125 or 220–250 V dc ± 20 %
Prolongation of trip impulse t_d	*0–3 s in steps of 50 ms*

Power consumption

auxiliary supply	
normal service	maximum 18 W
operational	maximum 40 W
Phase current circuits, per phase at rated current	
I_n = 1 A	< 60 mVA
I_n = 2 A	< 120 mVA
I_n = 5 A	< 300 mVA
Reverse power and loss-of-excitation function (phase R)	
I_n = 1 A	< 60 mVA
I_n = 2 A	< 120 mVA
I_n = 5 A	< 300 mVA
Ground current circuit, at rated current	< 0.3 mVA
Line voltage circuits, per phase at rated voltage (110 V)	< 50 mVA
Neutral point voltage circuit, at rated voltage (240 V)	< 200 mVA

Overload capacity

Phase current circuit	
continuous	3 x I_n
for 1 s	100 x I_n, maximum 350 A
Line voltage circuits	
continuous	2 x U_n
Ground current circuit	
continuous	20 x IN_n
for 1 s	150 x IN_n
Neutral point voltage circuit,	
continuous	2 x UN_n
Permitted service ambient temperature	−5°C to +55°C

Technical data (cont'd)

Dielectric test: current circuits	2.5 kV, 50 Hz, 1 min
other circuits	2.0 kV, 50 Hz, 1 min
Impulse voltage test	5 kV, 1.2/50 µs, 0.5J
Power frequency test	0.5 kV, 50 Hz, 2 min
Fast transient test	4–8 kV, 2 min
1 MHz burst test	2.5 kV, 2 s
Humidity test	acc. to IEC 68-2-30
Storage temperature	–40°C to +70°C
Weight:	10 kg
Dimensions	6U 19″ H=266 W=483 D=226 mm

Contact data for trip and alarm relays:

System voltage	250 V ac/dc
Test voltage over open contact	1000 V, 50 Hz, 1 min
Test voltage between contact and relay coil	2000 V, 50 Hz, 1 min
Current-carrying capactiy continuous	maximum 5 A
Making and conducting capacity, L/R < 10 ms for 200 ms for 1 s	 maximum 30 A maximum 10 A
Recommended min contact loading	minimum 1 mA minimum 5 V minimum 50 mW
Breaking capacity ac, p.f. > 0.4 dc, L/R < 40 ms	 8 A
24 V	2.0 A
48 V	1.0 A
55 V	0.8 A
110 V	0.4 A
125 V	0.3 A
220 V	0.2 A
250 V	0.15 A

3I > Three-phase O/C function

Start function:	$I> = (1-2.5) \times I_b$ in steps of 0.01 I_b
Time delay Alternative 1: 2 independent time steps	
Step 1:	$t_1 = 0.1-10$ s
Step 2:	$t_2 = t_1 + (0.1-10)$ s in steps of 50 ms
Alternative 2: normal inverse + independent time	
Step 1:	t_1 = normal inverse
Time scale factor	k=0.05–1.2 in steps of 0.01
Step 2:	$t_2 = t_1 + (0.1-10)$ s
Instantaneous function (can be blocked)	$I>> = (1-12) \times I_b$ in steps of 0.1 I_b
Limiting error for current measurement	< 5 % of set value
Operate time	< 60 ms at 2 x set operate value
Reset time	< 80 ms to zero from 10 x set operate value
Reset ratio	> 95 %

3U > Three-phase O/V function

Start function	$U> = (1.0-1.4) \times U_b$ in steps of $0.01 \times U_b$
Time delay	$t_1 = 0.1-10$ s in steps of 50 ms
Instantaneous function (can be blocked)	$U>> = (1.0-1.7) \times U_b$ in steps of $0.01 \times U_b$
Limiting error for voltage measurement	< 5 % of set value
Operate time	< 70 ms at 2 x set operate value
Reset time	< 70 ms from 2 x set operate value to zero
Reset ratio	> 95 %

The over-voltage function be programmed for measurement of phase voltages or voltage between lines.

UN Neutral point voltage function (stator ground fault)

Start function	$UN = (0.04-0.25) \times UN_b$ in steps of $0.01 \times UN_b$
Time delays Trip, step 1 Trip, step 2 Alarm in steps of 50 ms	 $t_1 = 0.1-10$ s $t_2 = 0.1-10$ s
Limiting error for voltage measurement	< 5 % of set operating value
Operate time	< 100 ms at 2 x set operate value
Reset time	< 100 ms from 2 x set operate value to zero
Reset ratio	> 90 %
Damping factor for 3rd harmonic voltage	> 20

IN Neutral overcurrent function (Stator ground fault)

Start function	$IN = (1-6) \times IN_n$ in steps of $0.1 \times IN_n$
Time delay	$t_1 = 0.1-10$ s in steps of 50 ms
Limiting error for current measurement	< 5 % of set operat-rating value
Operate time	< 60 ms at 2 x set operate value

Tecnical data (cont'd)

Reset time	< 80 ms from 10 x set operate value to zero
Reset ratio	> 90 %

3U < Three-phase U/V function

Start function	$U < =(0.2-1.0)xU_b$ in steps of $0.01xU_b$
Time delay	t_1=0.1–10 s in steps of 50 ms
Delay of exernal release	t_{en1}=0.1–10 s in steps of 50 ms
Holding of seal-in O/C relay	t_{en2}=0.1–10 s in steps of 50 ms
Limiting error for voltage measurement	< 5 % of set value
Operate time	< 70 ms from 2 x set operate value to zero
Reset time	< 70 ms from zero to 2 x set operate value
Reset ratio	> 105 %

The under-voltage function can be programmed for measurement of phase voltages or voltage between lines.

I_{nsc} > Negative phase-sequence current function

Start function, trip	$I_2 >>=(0.08-0.4)xI_b$
Start function, alarm	$I_2 >=(0.06-0.3)xI_b$ in steps of $0.01xI_b$
Time delay, trip a) inverse time characteristic	$t = \frac{k}{I_2^2}$
Time setting	k=5–40 s in steps of 1 s
b) constant time	t_1=0.5–20 min in steps of 6 s
Time delay, alarm	t_a=0–40 s in steps of 0.5 s
Cooling down time a = 2–80 in steps of 1	t_c=a x k
Limiting error for inverse time measurement	±10 % of set time
Limiting error for start current	< 5 % of set value

Φ < Loss of excitation function

Start functions directional current	$I\alpha$ =(0.1–1)xI_b
over-current release	I >=(1–1.5)xI_b
under-voltage release	$U< =(0.7-1)xU_b$ in steps of $0.01xI_b$, U_b
Characteristic angle of I	α = 45–90° in steps of 1°
Time delay, trip	t_1=0.1–10 s in steps of 50 ms
for O/C release	ten2=*0.1–10* s in steps of 50 ms
for U/V release	ten1=*0.1–10* s in steps of 50 ms
for dir.current trip, without release (timer 2, can be blocked)	t_2=0.5–20 min in steps of 6 s
Time delay, alarm	t_a=0–40 s in steps of 0.5 s
Limiting error for current and voltage measurement	< 5 % of set value

P <– Reverse power function

Start function	
Active component of current in reverse direction	I_p=(0.005–0.10)xI_b in steps of 0.005xI_b
Adjustment for correction of system angular error	β = ±3° in steps of 0.1°
Time delays	
Trip, externally released	t_1=0.1–10 s in steps of 50 ms
Trip without external release	t_2=0–40 s in steps of 0.5 s
Sealing-in, for function at power swings	t_h=0–40 s in steps of 0.5 s
Limiting error for current measurement	< 5 % of set value

Re < Rotor ground fault function

Start function	
trip	R_e<<=(0.5–10)kohm
alarm	R_e <=(0.5–10)kohm in steps of 0.5 kohm
Time delay	
trip	
fault on dc side	t_1=0–40 s
fault on ac side	t_2=0–40 s
alarm	t_a=0–40 s in steps of 0.5 s
Length of trip impulse t_p	*0.1–10 s in steps of 50 ms*
Limiting error for operate resistance	< 10 % of set value
Maximum excitation voltage	
Continuously	450 V dc
For 10 s	675 V dc
Maximum permitted voltage between lines on the ac side of the field circuit	300 V ac
Maximum capacitance field circuit to earth	3 µF
Auxiliary injection voltage	110–120 or 220–240 V, 50–60 Hz
Permitted variation in injection aux. voltage	
RMS value	± 20 %
Frequency	± 5 Hz

To order

Specify:
- Type REG 100
- Quantity
- Ordering No: RK 682 015-AA
- Rated phase current I_n
- Rated ground current IN_n
- Auxiliary voltages:
  EL (dc/dc converter supply)
  RL (interface relays)

Additional units:
Reverse power and loss-of-excitation unit RLPB 100.
Ordering No: RK 682 006-AA.

Negative sequence current unit:
Ordering No: RK 682 007-AA

Rotor ground fault units.
Ordering No: RK 682 008-AA.
Auxiliary ac voltage EL, 110–120 V or 220–240 V
Method of housing the voltage injection unit.
- In box GKB 855 with or without heating
- On apparatus plate, semiprotected, for installation in cubicle.

Terminal diagram 7452 563-AAA is available on request.

See under Case dimensions and mounting instructions

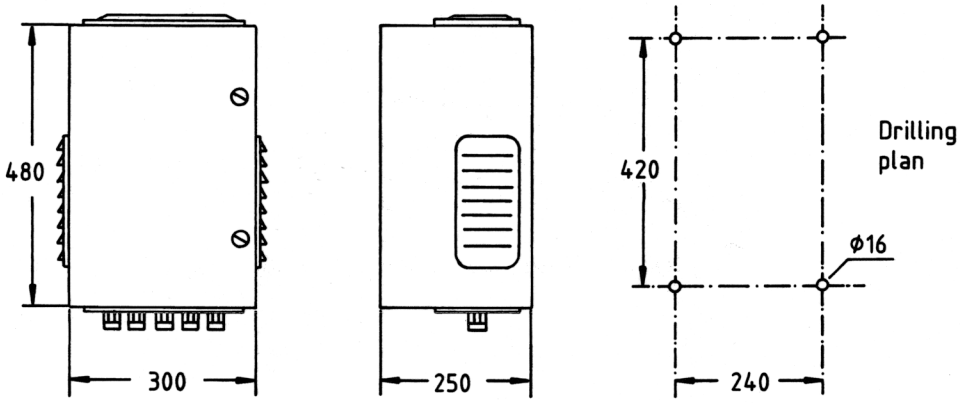

Fig. 14 GKB 855 box enclosure with voltage injection unit.

ABB Relays AB, S-721 71 Västerås, Sweden
Tel. +46 21-32 13 00, Telefax +46 21-14 69 18
Telex 408 36 abbrly s

Printed in Sweden