This document is issued by means of a computerized system.
The digitally stored original is electronically approved. The
approved document has a date entered in the 'Approved'-field.
A manual signature is not required.

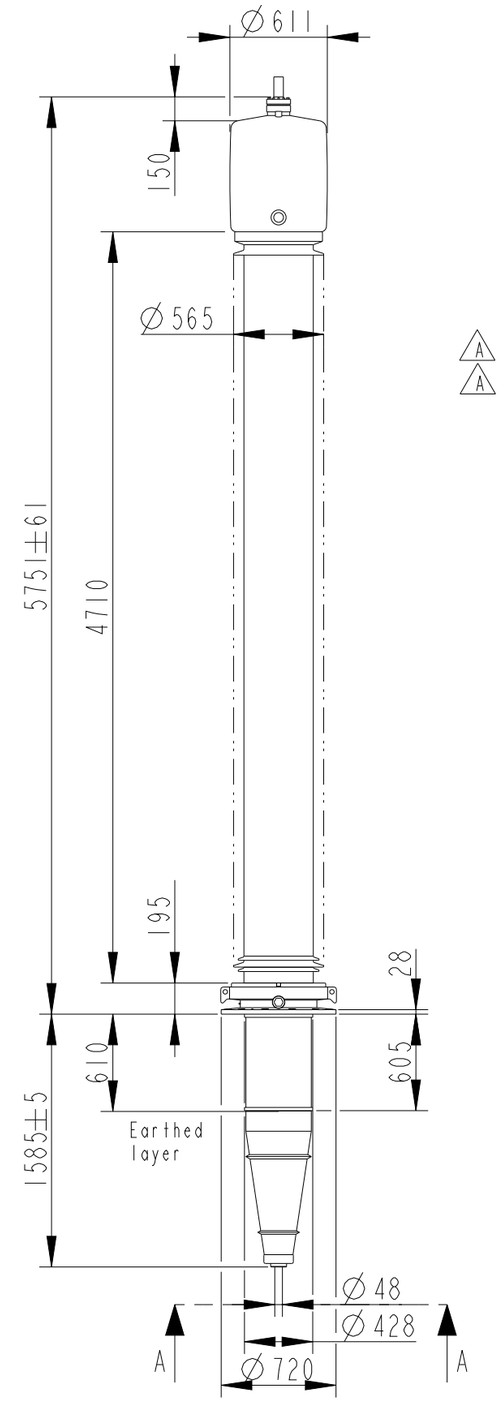

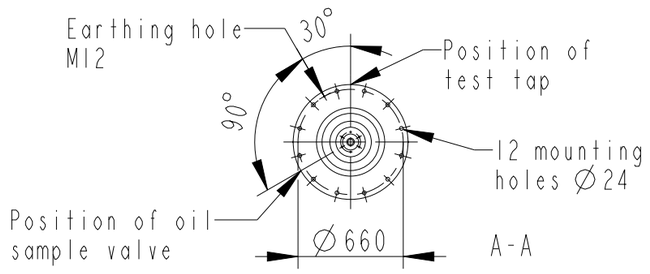

Bushing Data:

	Rated Voltage	550	kV
	Phase to-earth Voltage	318	kV
	Dry Lightning Impulse 1,2/50µs	1800	kV
	Wet Switching Impulse	1360	kV
	Wet Power frequence AC	850	kV
	Routine test 1min dry 50Hz	800	kV
	Rated Current	2500	A
A	Creepage Distance	18020	mm
A	Mass	2030	kg

Ordering Data:

BUSHING COLOUR AIR INSULATOR
LFI21076 -A / -AA BROWN / LIGHT GREY

OUTER TERMINAL

	H2 (mm)	D2 (mm)
LFI70 073-A Al	125	60
LFI70 073-B Cu	125	60
LFI70 073-G Cu/Ag	125	60

OTHER TYPES ON REQUEST

END-SHIELD
LFI70 046-V EPOXY INSULATED
LFI70 046-VP INSULATED WITH 3 mm PRESSBOARD

DRAW ROD SYSTEM
LFI70 059 LOWER DRAW ROD WITH NI=4 OR NI=6
LFI70 057 UPPER DRAW ROD

INNER TERMINAL

	D3 (mm)	D9 (mm)	Cond.area (mm2)	Current (A) IEC	IEEE
LFI70 056-A	O *)	35	-	-	-
LFI70 056-B	15	35	95	390	370
LFI70 056-C	30	35	285	1000	830

*) WITH PILOT HOLE D=5

INNER TERMINAL / OUTER TERMINAL

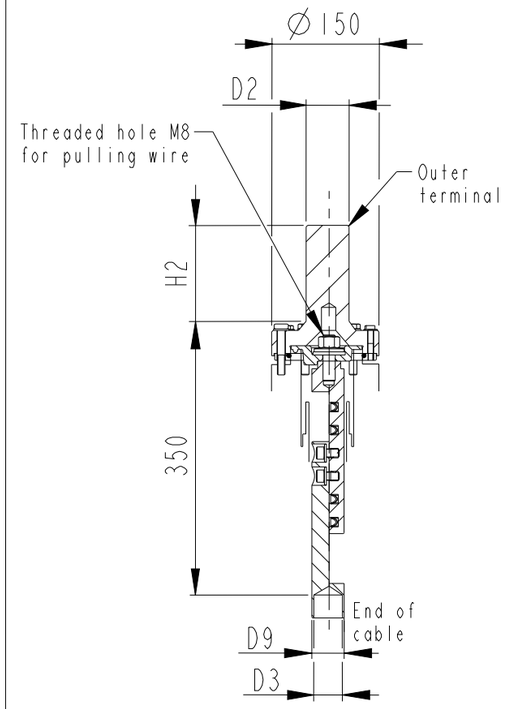

END SHIELD

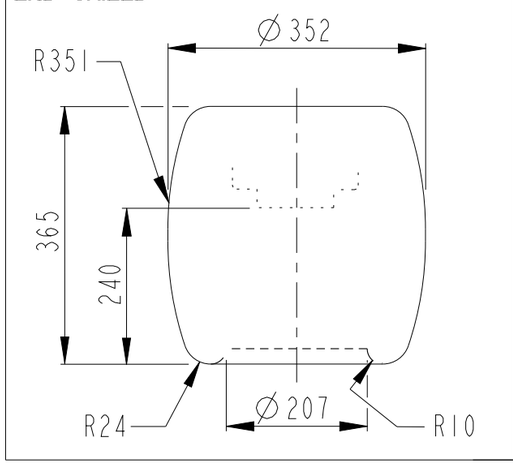

DRAW ROD SYSTEM / OUTER TERMINAL

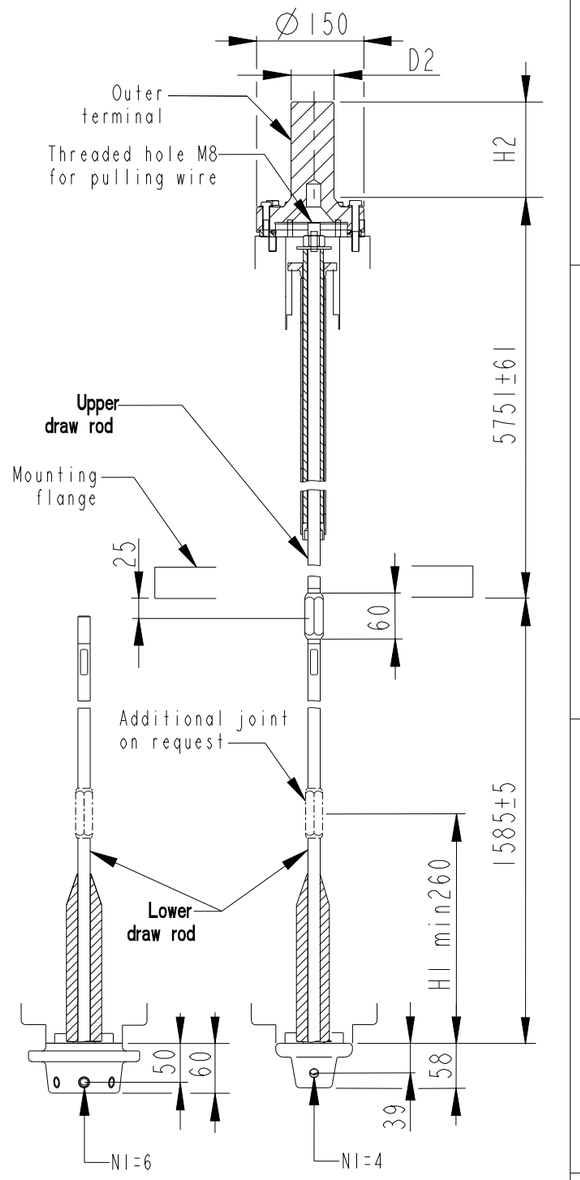

NI=Number of holes M12, equipped with thread insert with screw lock, depth 20, for cable lugs.

ABB Ludvika, Sweden

No.			
Um/Uy	kV	Ir	A 50/60 Hz
BIL	kV	SIL	kV AC kV
M	kg	L	mm ⊬ °
C1		pF	Tan δ x
C2		pF	Tan δ x

Prepared: iladmin	2008-04-30	Responsible department: PGCO/BK	Title: GOE-1800-1360-2500-0.6
Modified by: Oscar Andersson	2017-07-28	Take over department	GOE-1800-1360-2500-0.6
Approved by		Used in product	Language: 82
Revision: A — Creepage distace & mass changed			Order / Sheet no.: 1
ABB			Document no.: 2751369-105 / No. Shts.: (1)

The information contained in this document has to kept strictly confidential. Any unauthorized use, reproduction, distribution or disclosure to third parties are strictly forbidden.
ABB reserves all rights regarding Intellectual Property Rights.
© Copyright 2013 ABB. All rights reserved.