CATALOG

SlimLine XR

Switch Disconnector Fuse 63-630 A

Contents

005–010 **Introduction**

011–020 **Product overview**

021–038 **Ordering information**

039–042 **Technical Data**

043–050 **Dimensional drawings**

Introduction

006–007 **SlimLine XR**

008 **Applications and approvals**

009 **Product overview**

Introduction
SlimLine XR

Easy to install
The use of plug-in contacts at the distribution busbars, an integrated slide support and increased cable termination area makes the installation easy and time saving. SlimLine XR can be installed in horizontal or vertical direction. The concept of these kind of switches allows more outgoing feeders per switchboard saving cubicle, floor space and costs. The SlimLine XR can even be removed and replaced in a switchboard with live busbars.

Continuous operation
The Intelligent Tier Switch ITS2.1 and ITS2.D is the optimal solution for Energy Management systems to analyze, optimize and control the energy consumption in modern commercial and industrial buildings. ITS2 can alert facility managers if fuses blow or temperature or currents exceed the given limits.

Safety and protection
True position indication will always show, if the contacts are closed or open. True position indication can be lifesaving when performing maintenance to a distribution panel.
The SlimLine switch disconnector fuse fulfils the highest requirements for modern switch disconnector fuses with a total safety concept. The switch disconnector fuses are tested according to the IEC 60947-3 standard with more stringent requirements for isolation, making, performance and safety.

Introduction
SlimLine XR

The latest within optimal operation and design
The SlimLine XR fulfils all increasing demands in the industry for safe energy distribution. Installation of the SlimLine XR is even easier and more time saving than ever before. The increased space in the cable termination area will allow better access for the cable installation.

Motor operation
SlimLine XR offers an integrated motor (as option) for remote or local operation. The motor operation unit is 100% integrated inside the SlimLine XR. The front operated ON / OFF buttons are shrouded by a transparent cover with padlocking facility.

Electronic Fuse Monitoring (EFM)
The SlimLine XR fuse monitor (EFM) is an integrated fuse blown monitoring device for local indication in the front by LED indicator and for remote alarm via an internal relay output. After replacement of a blown fuse, the EFM will automatically be reset and the green LED in the front will turn on.

Intelligent Tier Switch (ITS2)
SlimLine XR can also be delivered with an integrated energy monitoring device (ITS2) for remote communication by using Bus connection. All parameters of setting alarm levels can be done via a laptop connected to all SlimLine XR.

—
Installation video

Introduction
Applications and approvals

Applications:
- Distribution boards
- Building industry
- Oil and Gas industries
- Data centers
- Hospitals
- Airports
- Banks
- Shopping center
- In combination with Motor Control Centers
- When using emergency power supply
- Photovoltaic Power Plants

Approvals:
- IEC / EN 60947-3
- CB
- EAC
- CCC

Introduction
Product Overview

	XR00	XR1	XR2	XR3
Frame size	XR00	XR1	XR2	XR3
Rated current up to (A)	160	250	400	630
For NH fuses	●	●	●	●
For BS88 fuses	●	●	●	●
Electronic fuse monitoring (EFM)	●	●	●	●
Intelligent Tier Switch ITS2.1/2.D	●	●	●	●
Auxiliary switch	●	●	●	●
Multiplug	●	●	●	●
Ammeter	●	●	●	●
Current tarnsformers (CT) integrated	●	●	●	●
Terminal extention for CT's integrated	●	●		
Current tarnsformers (CT) with contact extention	●	●	●	●
Cable shroud	●	●	●	●
V-clamp	●	●	●	●
Double clamp		●		
Contact extention	●	●	●	●
SlimLine Cassette	●	●	●	●
Double handle			●	●

Product overview

012–014	**Assembly**
015	**Busbar Section Switch**
016–017	**Electronic Fuse Monitoring (EFM)**
018–019	**Intelligent Tier Switch ITS2.1 and ITS2.D**
020	**Motor operation (MOT)**

Product overview
Assembly

XR00, 160 A

1. Front cover key
2. Cable terminal key
3. A-meter
4. Electronic fuse monitoring, EFM
5. A-meter bracket
6. Contact extensions
7. Cable clamp
8. Cable terminal shroud

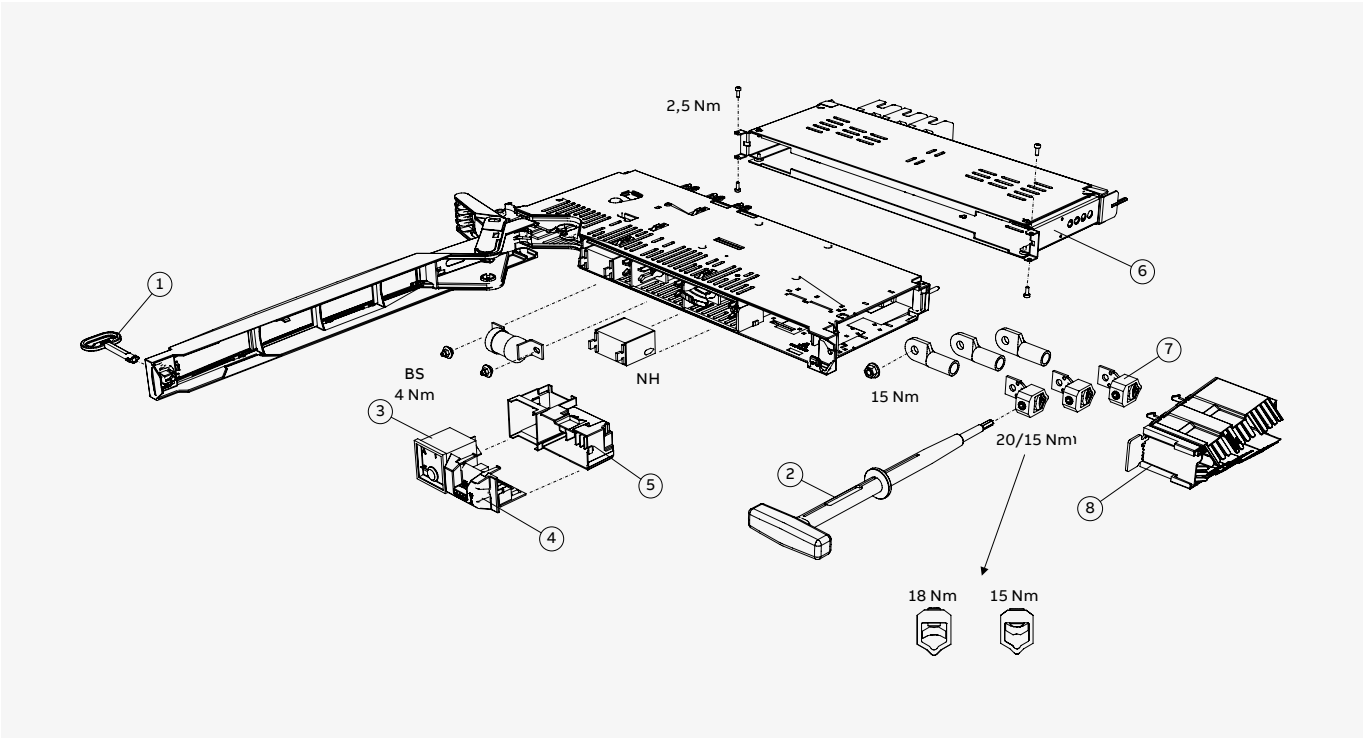

XR1, 250 A

1. Front cover key
2. Cable terminal key
3. A-meter
4. Electronic fuse monitoring, EFM
5. A-meter bracket
6. Contact extension
7. Cable clamp
8. Cable terminal shroud
9. Terminal cover

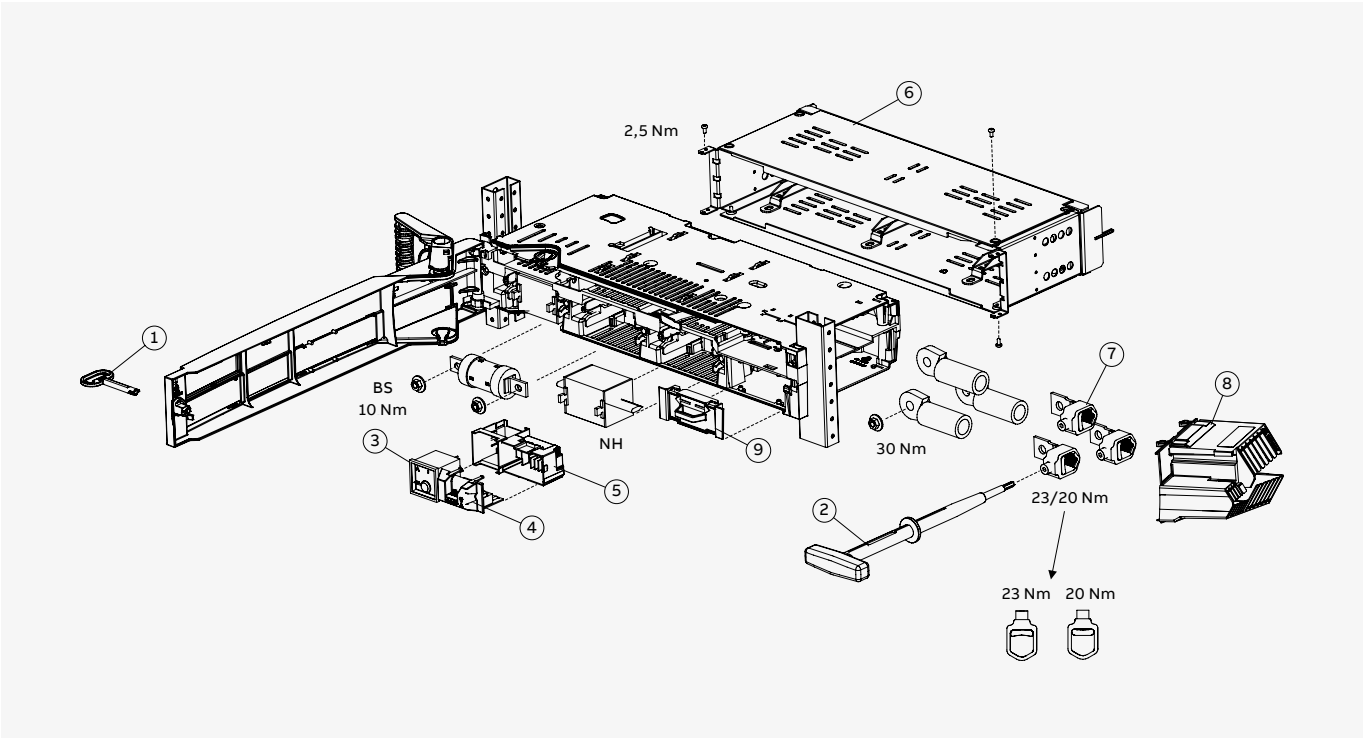

Product overview
Assembly

XR2/3, 400-630 A

1. Front cover key
2. Cable terminal key
4. A-meter
5. Electronic fuse monitoring, EFM
6. Contact extensions
7. Double cable clamp
8. Cable terminal shroud
9. Auxiliary switch
10. Multi plugs
11. A-meter bracket

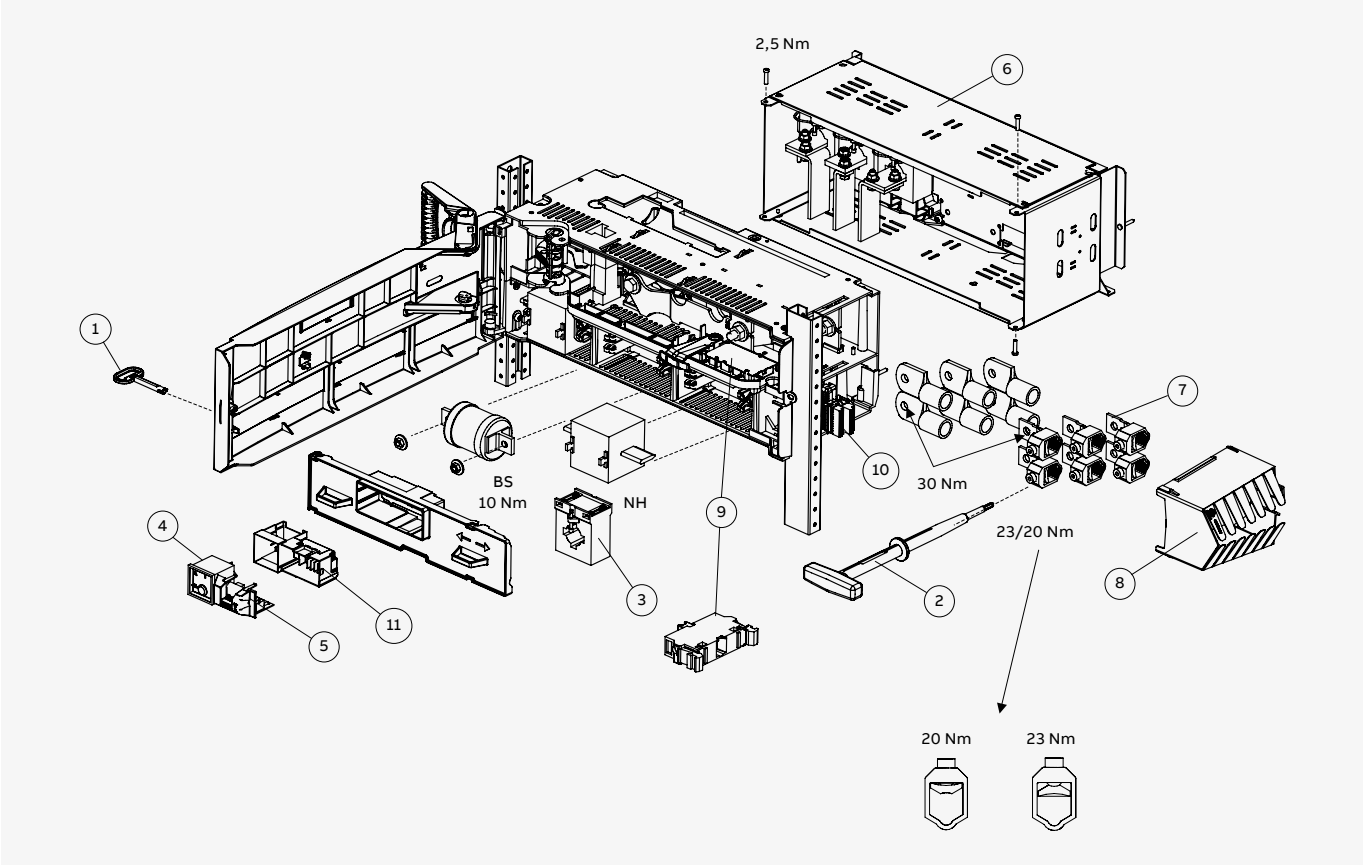

Product overview
Busbar Section Switch

XR-SS/SP
XR-SS/SP Switch disconnector fuse switch can sectionalize tow parallel (SP) or serial (SS) busbar systems. It can be used with DIN Fuse size 3. The XR-SS/SP has and Utilization category of AC23B, 690V, 630A. This product includes two ventilated blind covers.

XR is available for the following busbar phase distances
50 mm distance between phases, 5 mm busbar

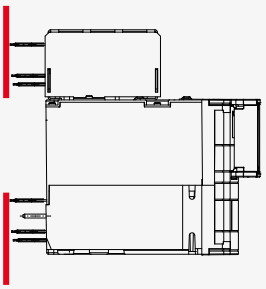

XRM - SS

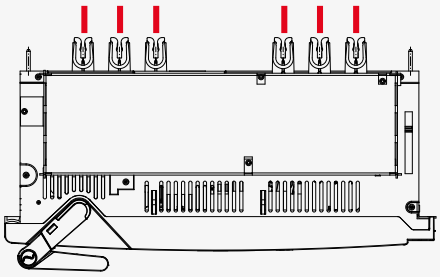

XR - SP

185 mm distance between phases, 10 mm busbar

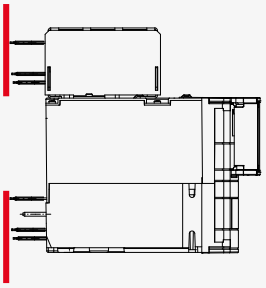

XRM - SS

Product overview
Electronic Fuse Monitoring (EFM)

The SlimLine XR EFM gives an alarm at any fault conditions if a fuse is blown. An internal potential free relay (1NC+1NO) will trip to transfer a signal for a remote fuse blown alarm. The EFM unit is self supplied, which means no additional power supply is required.

Fuse status			**Relay contacts**		**Relay contacts**	
	Green LED	**Red LED**	**NO contact 11,12**		**NC contact 13,12**	
1. XR in ON position			**Open**	**Closed**	**Open**	**Closed**
Fuses OK	✸	●	X			X
Fuses BLOWN	●	✸		X	X	
2. XR in OFF position						
Fuses OK	●	●	X			X
Fuses BLOWN	●	●	X			X

Diagram XR AC EFM

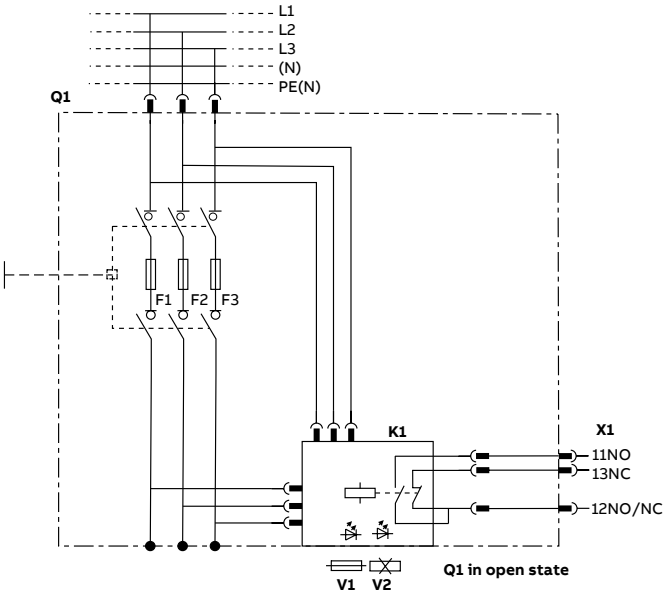

Q1. Switch disconnector Fuse
K1: Electronic Fuse Monitor (EFM)
V1: Fuses OK
V2: Fuse(s) blown
X1: Multiplug terminals

Diagram XR DC EFM

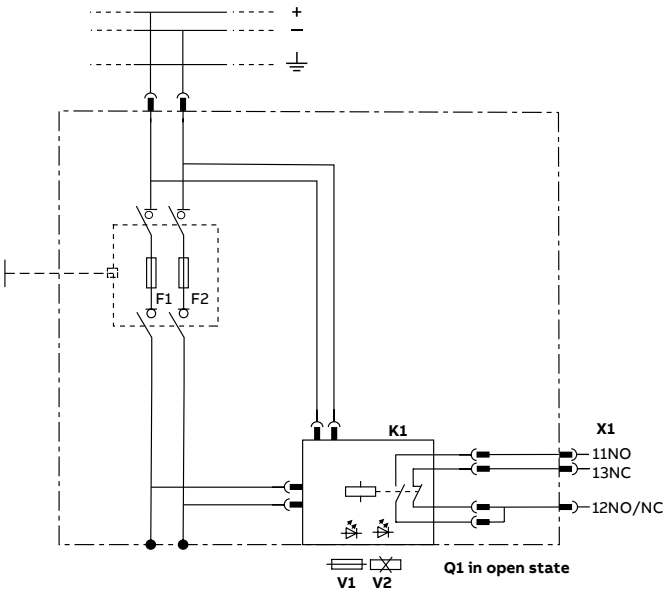

Q1. Switch disconnector Fuse
K1: Electronic Fuse Monitor (EFM)
V1: Fuses OK
V2: Fuse(s) blown
X1: Multiplug terminals

Product overview
Intelligent Tier Switch ITS2.1 and ITS2.D

The SlimLine XR ITS2.1 and ITS 2.D (with integrated Display) is developed for easy set up, reliable remote control, and monitoring via bus communication.

SlimLine XR ITS2.1: which data can be monitored

Features		
Line Voltage	(V AC)	V12, V23, V31
Phase Voltage	(V AC)	V1N, V2N, V3N
Current	(A)	L1, L2, L3
Active power	(kW)	L1, L2, L3
Reactive power	(kVA)	L1, L2, L3
Cos phi	(Cos)	L1, L2, L3
Power factor	(PF)	Sum
Energy	(kWh)	Sum
Fuse status	(EFM)	L1, L2, L3
Temperature	(°C)	Terminal L2
Switch position		On/Off
Motor Control		by bus
Communication bus		RS485
Protocol		Modbus RTU

Configurable Modbus RTU parameters	
Default setting	19200 E,8,1 – Default Modbus addr. 3
Baudrates	9600, 19200
Parity, stop- start bits	E,8,1 – O,8,1 – N,8,2 – N,8,1
Modbus address range	1 – 247

—
User manual

SlimLine XR ITS2.1/2.D features

- Easy to set up via the software tool Ekip Connect
- Reliable remote monitoring via bus communication
- Serial bus communication via Modbus RTU / RS485
- With integrated Motor operator, it is possible to configure automatically when a fuse is blown.
- ITS2.1 can be extended with the Ekip Display later › ITS2.D.
- ITS2.D has the Ekip Display factory fitted

SlimLine XR ITS2.D display menues

—
Start menu

—
Top menu

Available in a wide range of variant:
The new ITS2.1/2.D modules are delivered fully integrated in the SlimLine XR device for DIN NH Fuses or BS Fuses.

- XR-M 3 pole Manually operated/ Motor operated
- XR-E 4 pole Manually operated/ Motor operated

Connection data at the ITS2.1/2.D multiplug	
1	24 VDC
2	24 V GND (0V)
3	RS-485 0V
4	RS-485 + (A)
5	RS-485 - (B)

Conductor cross section	
Stranded min.	0,25 mm²
Stranded max.	1,5 mm²
Stranded, with ferrule without plastic sleeve max.	1,5 mm²
Stranded, with ferrule with plastic sleeve max.	0,75 mm²

Product overview
Motor operation (MOT)

SlimLine XR offers an integrated motor for remote and local operation. The motor operation unit is 100% integrated without any changes of external dimensions. The front operated ON/OFF buttons are shrouded by a transparent cover with padlocking facility.

EFM + MOT New multi plug P

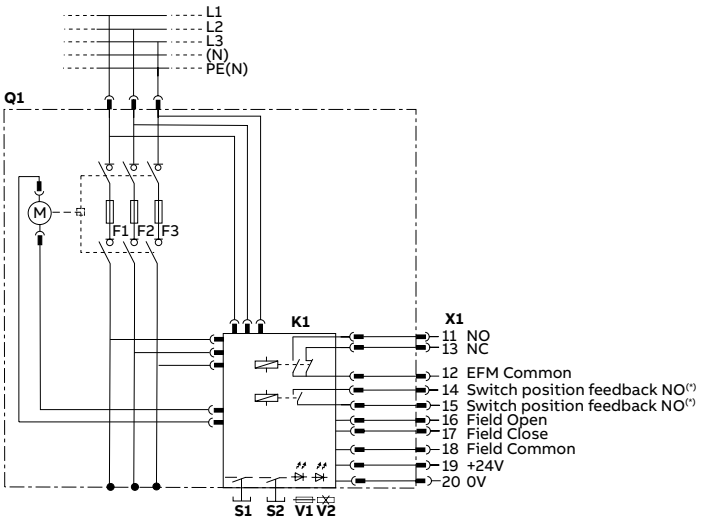

Q1. Switch disconnector Fuse
K1: Electronic Fuse Monitor (EFM)
V1: Fuses OK
V2: Fuse(s) fail(ed)
X1: Multiplug terminals
S1: Close
S2: Open

(*) Contact follow main contact. Will go to NO at loss OF+24V for indication purposes only

Ordering information

022–023	**50 mm busbar distance**
024–025	**185 mm busbar distance**
026	**50 mm busbar distance (BS)**
027	**185 mm busbar distance (BS)**
028	**Auxiliary switches**
029	**Multiplug, ammeter and EFM bracket**
030–031	**Current metering in XR Standard device 1 and 3 phase**
032–033	**Cable termination and cable shrouds**
034	**Contact extensions**
035	**Common accessories**
036–037	**SlimLine cassettes and IP busbar covers**
038	**Spareparts and front covers**

Ordering information
50 mm busbar distance

SlimLine XR Switch Disconnector Fuse - 50 mm busbar distance

	Number of poles	Rated operational current (A)	Type	Order code	Weight (Kg)
3 - pole	3	160	XRE00-50-3P	1SEP102240R1100	3,63
	3	160	XRM00-50-3P	1SEP102240R1300	3,63
	3	160	XRE00-50-3P-EFM	1SEP102240R1101	3,63
	3	160	XRM00-50-3P-EFM	1SEP102240R1301	3,63
	3	160	XRM00-50-3P-MOT	1SEP102240R1302	3,94
	3	160	XRM00-50-3P-MOT-EFM	1SEP102240R1303	4,1
	3	160	XRM00-50-3P-ITS2.1	1SEP102240R1316	4,73
	3	160	XRM00-50-3P-ITS2.1-MOT	1SEP102240R1317	5,04
	3	250	XRE1-50-3P	1SEP102241R1100	6,75
	3	250	XRM1-50-3P	1SEP102241R1300	6,75
	3	250	XRE1-50-3P-EFM	1SEP102241R1101	6,75
	3	250	XRM1-50-3P-EFM	1SEP102241R1301	6,75
	3	250	XRM1-50-3P-MOT	1SEP102241R1302	7,06
	3	250	XRM1-50-3P-MOT-EFM	1SEP102241R1303	7,18
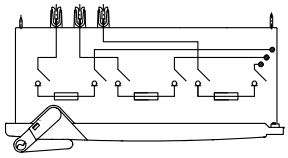	3	250	XRM1-50-3P-ITS2.1	1SEP102241R1316	7,9
	3	250	XRM1-50-3P-ITS2.1-MOT	1SEP102241R1317	8,2
	3	400	XRE2-50-3P	1SEP102242R1100	15
	3	400	XRM2-50-3P	1SEP102242R1300	15
	3	400	XRE2-50-3P-EFM	1SEP102242R1101	15
	3	400	XRM2-50-3P-EFM	1SEP102242R1301	15
	3	400	XRM2-50-3P-MOT	1SEP102242R1302	15,31
	3	400	XRM2-50-3P-MOT-EFM	1SEP102242R1303	15,42
	3	400	XRM2-50-3P-ITS2.1	1SEP102242R1316	16,5
	3	400	XRM2-50-3P-ITS2.1-MOT	1SEP102242R1317	16,7
	3	630	XRE3-50-3P	1SEP102243R1100	15,36
	3	630	XRM3-50-3P	1SEP102243R1300	15,36
	3	630	XRE3-50-3P-EFM	1SEP102243R1101	15,36
	3	630	XRM3-50-3P-EFM	1SEP102243R1301	15,36
	3	630	XRM3-50-3P-MOT	1SEP102243R1302	15,67
	3	630	XRM3-50-3P-MOT-EFM	1SEP102243R1303	15,78
	3	630	XRM3-50-3P-ITS2.1	1SEP102243R1316	17,1
	3	630	XRM3-50-3P-ITS2.1-MOT	1SEP102243R1317	17,37

The values given include all three phases, but without fuses.

—
SlimLine XR Busbar Section Switch - 50 mm busbar distance

	Number of poles	Rated operational current (A)	Type	Order code	Weight (Kg)
SP 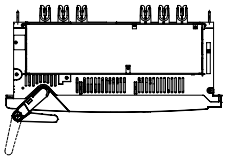	3	630	XRM3-50-3P-SP	1SEP102243R1360	16,6
SS 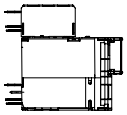	3	630	XRM3-50-3P-SS	1SEP102243R1370	16,6

—
SlimLine XR Switch Disconnector Fuse - 50 mm busbar distance

	Number of poles	Rated operational current (A)	Type	Order code	Weight (Kg)
4 - pole 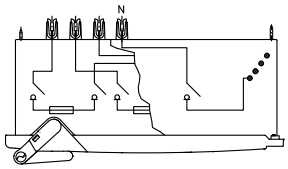	4	160	XRE00-50-4P	1SEP102240R1400	4,16
	4	160	XRE00-50-4P-EFM	1SEP102240R1401	4,27
	4	160	XRE00-50-4P-MOT	1SEP102240R1402	4,47
	4	160	XRE00-50-4P-MOT-EFM	1SEP102240R1403	4,6
	4	160	XRE00-50-4P-ITS2.1	1SEP102240R1416	5,26
	4	160	XRE00-50-4P-ITS2.1-MOT	1SEP102240R1417	5,56
	4	250	XRE1-50-4P	1SEP102241R1400	7,15
	4	250	XRE1-50-4P-EFM	1SEP102241R1401	7,27
	4	250	XRE1-50-4P-MOT	1SEP102241R1402	7,46
	4	250	XRE1-50-4P-MOT-EFM	1SEP102241R1403	7,58
	4	250	XRE1-50-4P-ITS2.1	1SEP102241R1416	8,3
	4	250	XRE1-50-4P-ITS2.1-MOT	1SEP102241R1417	8,6
	4	400	XRE2-50-4P	1SEP102242R1400	16,19
	4	400	XRE2-50-4P-EFM	1SEP102242R1401	16,3
	4	400	XRE2-50-4P-MOT	1SEP102242R1402	16,5
	4	400	XRE2-50-4P-MOT-EFM	1SEP102242R1403	16,61
	4	400	XRE2-50-4P-ITS2.1	1SEP102242R1416	17,69
	4	400	XRE2-50-4P-ITS2.1-MOT	1SEP102242R1417	18
	4	630	XRE3-50-4P	1SEP102243R1400	16,78
	4	630	XRE3-50-4P-EFM	1SEP102243R1401	16,89
	4	630	XRE3-50-4P-MOT	1SEP102243R1402	16,5
	4	630	XRE3-50-4P-MOT-EFM	1SEP102243R1403	16,62
	4	630	XRE3-50-4P-ITS2.1	1SEP102243R1416	18,48
	4	630	XRE3-50-4P-ITS2.1-MOT	1SEP102243R1417	18,79

—
SlimLine XR DC Switch Disconnector Fuse - 50 mm busbar distance

	Number of poles	Rated operational current (A) DC23B (230V) DC21B (500V)	Type	Order code	Weight (Kg)
2 - pole DC 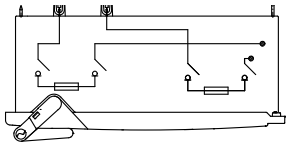	2	160	XRM00-50-DC	1SEP102240R1200	3,33
	2	250	XRM1-50-DC	1SEP102241R1200	6,25
	2	400	XRM2-50-DC	1SEP102242R1200	13,1
	2	630	XRM3-50-DC	1SEP102243R1200	13,46

Ordering information
185 mm busbar distance

SlimLine XR Switch Disconnector Fuse - 185 mm busbar distance

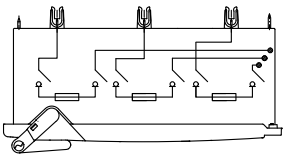

	Number of poles	Rated operational current (A)	Type	Order code	Weight (Kg)
3 - pole	3	160	XRE00-185-3P	1SEP102240R3100	3,63
	3	160	XRM00-185-3P	1SEP102240R3300	3,63
	3	160	XRE00-185-3P-EFM	1SEP102240R3101	3,63
	3	160	XRM00-185-3P-EFM	1SEP102240R3301	3,63
	3	160	XRM00-185-3P-MOT	1SEP102240R3302	3,94
	3	160	XRM00-185-3P-MOT-EFM	1SEP102240R3303	4,06
	3	160	XRM00-185-3P-ITS2.1	1SEP102240R3316	4,73
	3	160	XRM00-185-3P-ITS2.1-MOT	1SEP102240R3317	5,04
	3	160	XRM00-185-3P-ITS2.D	1SEP102240R3318	4,83
	3	160	XRM00-185-3P-ITS2.D-MOT	1SEP102240R3319	5,14
	3	250	XRE1-185-3P	1SEP102241R3100	6,75
	3	250	XRM1-185-3P	1SEP102241R3300	6,75
	3	250	XRE1-185 3P-EFM	1SEP102241R3101	6,75
	3	250	XRM1-185 3P-EFM	1SEP102241R3301	6,75
	3	250	XRM1-185-3P-MOT	1SEP102241R3302	7,06
	3	250	XRM1-185-3P-MOT-EFM	1SEP102241R3303	7,18
	3	250	XRM1-185-3P-ITS2.1	1SEP102241R3316	7,9
	3	250	XRM1-185-3P-ITS2.1-MOT	1SEP102241R3317	8,2
	3	250	XRM1-185-3P-ITS2.D	1SEP102241R3318	8
	3	250	XRM1-185-3P-ITS2.D-MOT	1SEP102241R3319	8,3
	3	400	XRE2-185-3P	1SEP102242R3100	15
	3	400	XRM2-185-3P	1SEP102242R3300	15
	3	400	XRE2-185-3P-EFM	1SEP102242R3101	15
	3	400	XRM2-185-3P-EFM	1SEP102242R3301	15
	3	400	XRM2-185-3P-MOT	1SEP102242R3302	15,31
	3	400	XRM2-185-3P-MOT-EFM	1SEP102242R3303	15,42
	3	400	XRM2-185-3P-ITS2.1	1SEP102242R3316	16,1
	3	400	XRM2-185-3P-ITS2.1-MOT	1SEP102242R3317	16,5
	3	400	XRM2-185-3P-ITS2.D	1SEP102242R3318	16,6
	3	400	XRM2-185-3P-ITS2.D-MOT	1SEP102242R3319	16,2
	3	630	XRE3-185-3P	1SEP102243R3100	15,36
	3	630	XRM3-185-3P	1SEP102243R3300	15,36
	3	630	XRE3-185-3P-EFM	1SEP102243R3101	15,36
	3	630	XRM3-185-3P-EFM	1SEP102243R3301	15,36
	3	630	XRM3-185-3P-MOT	1SEP102243R3302	15,67
	3	630	XRM3-185-3P-MOT-EFM	1SEP102243R3303	15,78
	3	630	XRM3-185-3P-ITS2.1	1SEP102243R3316	17,1
	3	630	XRM3-185-3P-ITS2.1-MOT	1SEP102243R3317	17,37
	3	630	XRM3-185-3P-ITS2.D	1SEP102243R3318	17,2
	3	630	XRM3-185-3P-ITS2.D-MOT	1SEP102243R3319	17,47

—
SlimLine XR Busbar Section Switch - 185 mm busbar distance

	Number of poles	Rated operational current (A)	Type	Order code	Weight (Kg)
SS					
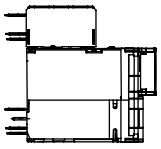	3	630	XRM3-185-3P-SS	1SEP102243R3370	16,6

—
SlimLine XR Switch Disconnector Fuse - 185 mm busbar distance

	Number of poles	Rated operational current (A)	Type	Order code	Weight (Kg)
4 - pole	4	160	XRE00-185-4P	1SEP102240R3400	4,1
	4	160	XRE00-185-4P-EFM	1SEP102240R3401	4,27
	4	160	XRE00-185-4P-MOT	1SEP102240R3402	4,47
	4	160	XRE00-185-4P-MOT-EFM	1SEP102240R3403	4,6
	4	250	XRE1-185-4P	1SEP102241R3400	7,15
	4	250	XRE1-185-4P-EFM	1SEP102241R3401	7,27
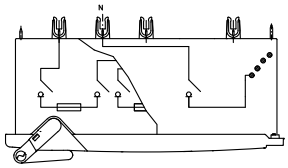	4	250	XRE1-185-4P-MOT	1SEP102241R3402	7,46
	4	250	XRE1-185-4P-MOT-EFM	1SEP102241R3403	7,58
	4	400	XRE2-185-4P	1SEP102242R3400	16,19
	4	400	XRE2-185-4P-EFM	1SEP102242R3401	16,3
	4	400	XRE2-185-4P-MOT	1SEP102242R3402	16,5
	4	400	XRE2-185-4P-MOT-EFM	1SEP102242R3403	16,61
	4	630	XRE3-185-4P	1SEP102243R3400	16,78
	4	630	XRE3-185-4P-EFM	1SEP102243R3401	16,89
	4	630	XRE3-185-4P-MOT	1SEP102243R3402	17,09
	4	630	XRE3-185-4P-MOT-EFM	1SEP102243R3403	17,2

—
SlimLine XR DC Switch Disconnector Fuse - 185 mm busbar distance

	Number of poles	Rated operational current (A) DC23B (230V) DC21B(500V)	Type	Order code	Weight (Kg)
2 - pole DC	2	160	XRM00-185-DC	1SEP102240R3200	3,33
	2	160	XRM00-185-DC-EFM-110	1SEP102240R3206	3,64
	2	160	XRM00-185-DC-EFM-500	1SEP102240R3208	3,64
	2	250	XRM1-185-DC	1SEP102241R3200	6,25
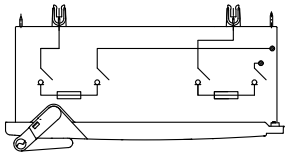	2	250	XRM1-185-DC-EFM-110	1SEP102241R3206	6,56
	2	250	XRM1-185-DC-EFM-500	1SEP102241R3208	6,56
	2	400	XRM2-185-DC	1SEP102242R3200	13,1
	2	400	XRM2-185-DC-EFM-110	1SEP102242R3206	13,41
	2	400	XRM2-185-DC-EFM-500	1SEP102242R3208	13,41
	2	630	XRM3-185-DC	1SEP102243R3200	13,46
	2	630	XRM3-185-DC-EFM-110	1SEP102243R3206	13,77
	2	630	XRM3-185-DC-EFM-500	1SEP102243R3208	13,77

Ordering information
50 mm busbar distance (BS)

SlimLine XR Switch Disconnector Fuse - 50 mm busbar distance, British standard version (BS)

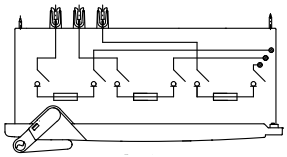

	Number of poles	Rated operational current (A)	Type	Order code	Weight (Kg)
3 - pole	3	63	XRM63BS-50-3P	1SEP102244R1300	3,6
	3	100	XRM100BS-50-3P	1SEP102245R1300	3,6
	3	160	XRM160BS-50-3P	1SEP102246R1300	3,6
	3	160	XRM160BS-50-3P-EFM	1SEP102246R1301	3,6
	3	160	XRM160BS-50-3P-MOT	1SEP102246R1302	3,93
	3	250	XRM250BS-50-3P	1SEP102247R1300	6,8
	3	250	XRM250BS-50-3P-EFM	1SEP102247R1301	6,8
	3	250	XRM250BS-50-3P-MOT	1SEP102247R1302	7,1
	3	400	XRM400BS-50-3P	1SEP102248R1300	14,8
	3	400	XRM400BS-50-3P-EFM	1SEP102248R1301	14,8
	3	400	XRM400BS-50-3P-MOT	1SEP102248R1302	15,4
	3	630	XRM630BS-50-3P	1SEP102249R1300	15
	3	630	XRM630BS-50-3P-EFM	1SEP102249R1301	15
	3	630	XRM630BS-50-3P-MOT	1SEP102249R1302	15,7

SlimLine XR Switch Disconnector Fuse - 50 mm busbar distance, British standard version (BS)

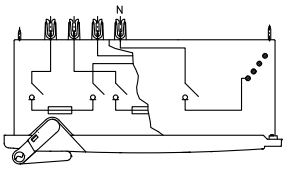

	Number of poles	Rated operational current (A)	Type	Order code	Weight (Kg)
4 - pole	4	160	XRE160BS-50-4P	1SEP102246R1400	4,15
	4	160	XRE160BS-50-4P-EFM	1SEP102246R1401	4,15
	4	160	XRE160BS-50-4P-MOT	1SEP102246R1402	4,5
	4	250	XRE250BS-50-4P	1SEP102247R1400	7,15
	4	250	XRE250BS-50-4P-EFM	1SEP102247R1401	7,15
	4	250	XRE250BS-50-4P-MOT	1SEP102247R1402	7,5
	4	400	XRE400BS-50-4P	1SEP102248R1400	16,3
	4	400	XRE400BS-50-4P-EFM	1SEP102248R1401	16,3
	4	400	XRE400BS-50-4P-MOT	1SEP102248R1402	16,5
	4	630	XRE630BS-50-4P	1SEP102249R1400	16,8
	4	630	XRE630BS-50-4P-EFM	1SEP102249R1401	16,8
	4	630	XRE630BS-50-4P-MOT	1SEP102249R1402	17,1

Ordering information
185 mm busbar distance (BS)

SlimLine XR Switch Disconnector Fuse - 185 mm busbar distance, British standard version (BS)

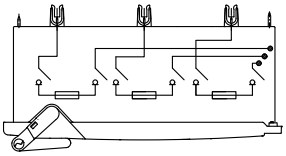

	Number of poles	Rated operational current (A)	Type	Order code	Weight (Kg)
3 - pole	3	63	XRM63BS-185-3P	1SEP102244R3300	3,6
	3	100	XRM100BS-185-3P	1SEP102245R3300	3,6
	3	160	XRM160BS-185-3P	1SEP102246R3300	3,6
	3	160	XRM160BS-185-3P-EFM	1SEP102246R3301	3,6
	3	160	XRM160BS-185-3P-MOT	1SEP102246R3302	3,94
	3	160	XRM160BS-185-3P-ITS2.1	1SEP102246R3316	4,4
	3	250	XRM250BS-185-3P	1SEP102247R3300	6,8
	3	250	XRM250BS-185-3P-EFM	1SEP102247R3301	6,8
	3	250	XRM250BS-185-3P-MOT	1SEP102247R3302	7,06
	3	250	XRM250BS-185-3P-ITS2.1	1SEP102247R3316	7,9
	3	400	XRM400BS-185-3P	1SEP102248R3300	14,8
	3	400	XRM400BS-185-3P-EFM	1SEP102248R3301	14,8
	3	400	XRM400BS-185-3P-MOT	1SEP102248R3302	15,4
	3	400	XRM400BS-185-3P-ITS2.1	1SEP102248R3316	16,5
	3	630	XRM630BS-185-3P	1SEP102249R3300	15
	3	630	XRM630BS-185-3P-EFM	1SEP102249R3301	15
	3	630	XRM630BS-185-3P-MOT	1SEP102249R3302	15,67
	3	630	XRM630BS-185-3P-ITS2.1	1SEP102249R3316	17,6

SlimLine XR Switch Disconnector Fuse - 185 mm busbar distance, British standard version (BS)

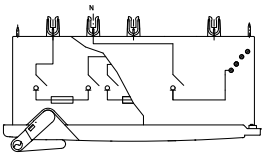

	Number of poles	Rated operational current (A)	Type	Order code	Weight (Kg)
4 - pole	4	160	XRE160BS-185-4P	1SEP102246R3400	4,15
	4	250	XRE250BS-185-4P	1SEP102247R3400	7,15
	4	400	XRE400BS-185-4P	1SEP102248R3400	16,30
	4	630	XRE630BS-185-4P	1SEP102249R3400	16,80
	4	160	XRE160BS-185-4P-EFM	1SEP102246R3401	4,15
	4	250	XRE250BS-185-4P-EFM	1SEP102247R3401	7,15
	4	400	XRE400BS-185-4P-EFM	1SEP102248R3401	16,30
	4	630	XRE630BS-185-4P-EFM	1SEP102249R3401	16,80
	4	160	XRE160BS-185-4P-MOT	1SEP102246R3402	4,50
	4	250	XRE250BS-185-4P-MOT	1SEP102247R3402	7,50
	4	400	XRE400BS-185-4P-MOT	1SEP102248R3402	16,50
	4	630	XRE630BS-185-4P-MOT	1SEP102249R3402	17,10

Ordering information
Auxiliary switches

—
Auxiliary switch kits
Auxiliary switch kits include 1 auxiliary switch 2 wires, connector, protectioncover and screws.

Type	Suitable for Switch Size	Order code
NO-XR00-KIT	XR00	1SEP619081R0001
NC-XR00-KIT	XR00	1SEP619083R0001
NO-XR1-KIT	XR1	1SEP619084R0001
NC-XR1-KIT	XR1	1SEP619089R0001
NO-XR2/3-KIT	XR2, XR3	1SEP619097R0001
NC-XR2/3-KIT	XR2, XR3	1SEP619096R0001

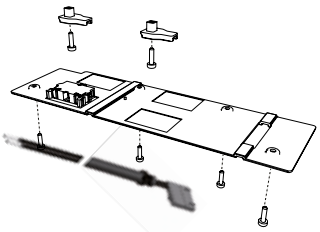

—
XR00 Aux. switch 1NO/NC kit, with wires and connector

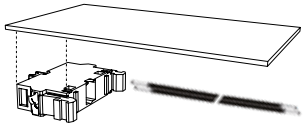

—
XR2/3 Aux. switch 1NO/NC kit, with wires

—
Additional auxiliary switches
Additional auxiliary switches include 1 auxiliary switch and 2 wires.

Type	Suitable for Switch Size	Order code
NO-XR00/1-W	XR00, XR1	1SEP619094R0001
NC-XR00/1-W	XR00, XR1	1SEP619095R0001
NO-XR2/3-W	XR2, XR3	1SEP619092R0001
NC-XR2/3-W	XR2, XR3	1SEP619093R0001

—
Auxiliary switch with wires

Ordering information
Multiplug P, ammeter and EFM bracket

Multiplug P

Pin Number	Cable size	Suitable for Switch Size	Type	Description	Order code
1 to 6	0,2-2,5mm²	XR00, XR1	MP-XR00/1-P6	Multiplug P6 for CT's	1SEP619532R0506
11 to 20	0,14 - 1,5mm²	XR00, XR1	MP-XR00/1-P10	Multiplug P10 for AUX - EFM - MOT	1SEP619532R0510
1 to 6	0,2 - 2,5mm²	XR00, XR1	MP-XR00/1-P16	Multiplug P16 forCT's - AUX - EFM - MOT*	1SEP619532R0516
11 to 20	0,14 - 1,5mm²	XR2, XR3	MP-XR2/3-P8	Multiplug P8 for CT's	1SEP408513R0001
1 to 8	0,2 - 2,5mm²				
1 to 8	0,14 - 1,5mm²	XR2, XR3	MP-XR2/3-P8-S	Multiplug P8 with screws for CT's	1SEP408515R0001
11 to 20	0,14 - 1,5mm²	XR2, XR3	MP-XR2/3-P12	Multiplug P12 for AUX - EFM - MOT	1SEP619637R0001
1 to 8	0,2 - 2,5mm²	XR2, XR3	MP-XR2/3-P20	Multiplug P20 forCT's - AUX - EFM - MOT*	1SEP408514R0001
11 to 20	0,14 - 1,5mm²				

*This multiplug is included when ordering EFM or MOT

Multiplug P

Ammeter

Measuring range	CT secondary current	Type	Order code
0-150-180	5A	AM-XR-0-150-180/5	NHSN714003P1150
0-250-300	1A	AM-XR-0-250-300/1	NHSN714003P0250
0-250-300	5A	AM-XR-0-250-300/5	NHSN714003P1250
0-400-480	1A	AM-XR-0-400-480/1	NHSN714003P0400
0-400-480	5A	AM-XR-0-400-480/5	NHSN714003P1400
0-600-720	1A	AM-XR-0-600-720/1	NHSN714003P0600
0-600-720	5A	AM-XR-0-600-720/5	NHSN714003P1600

Bracket for Ammeter and EFM

	Type	Order code
	BR-XR-AM-EFM	1SEP408519R0001

Ordering information

Current metering in XR Standard device 1 and 3 phase

—

Current transformers

XR00 and XR1 mounted inside the switch needs a terminal extention

Suitable for size	Mountable inside switch	Mountable with contact extention	Ratio	Power	Class	CT diameter	MBS-type	Type	Order code
XR00, XR1	x	x	150/1	3,75	1	21 mm	ASR 20.3	CT-XR00/1-150/1-1	NHSN718054P1015
XR00, XR1	x	x	150/5	3,75	1	21 mm	ASR 20.3	CT-XR00/1-150/5-1	NHSN718054P5015
XR00, XR1	x	x	150/1	2,5	0,5	21 mm	ASR 20.3	CT-XR00/1-150/1-0.5	NHSN718055P1015
XR00, XR1	x	x	150/5	2,5	0,5	21 mm	ASR 20.3	CT-XR00/1-150/5-0.5	NHSN718055P5015
XR1	x		250/1	5	1	21 mm	ASR 20.3	CT-XR1-250/1-1	NHSN718054P1025
XR1	x		250/5	5	1	21 mm	ASR 20.3	CT-XR1-250/5-1	NHSN718054P5025
XR1	x		250/1	5	0,5	21 mm	ASR 20.3	CT-XR1-250/1-0.5	NHSN718055P1025
XR1	x		250/5	5	0,5	21 mm	ASR 20.3	CT-XR1-250/5-0.5	NHSN718055P5025
XR1		x	250/1	10	1	32 mm	ASK 41.4	CT-XR2/3-250/1-1	NHSN718047P1025
XR1		x	250/5	10	1	32 mm	ASK 41.4	CT-XR2/3-250/5-1	NHSN718047P5025
XR1		x	250/1	5	0,5	32 mm	ASK 41.4	CT-XR2/3-250/1-0.5	NHSN718056P1025
XR1		x	250/5	5	0,5	32 mm	ASK 41.4	CT-XR2/3-250/5-0.5	NHSN718056P5025
XR2, XR3	x	x	250/1	10	1	32 mm	ASK 41.4	CT-XR2/3-250/1-1	NHSN718047P1025
XR2, XR3	x	x	250/5	10	1	32 mm	ASK 41.4	CT-XR2/3-250/5-1	NHSN718047P5025
XR2, XR3	x	x	300/1	10	1	32 mm	ASK 41.4	CT-XR2/3-300/1-1	NHSN718047P1030
XR2, XR3	x	x	300/5	10	1	32 mm	ASK 41.4	CT-XR2/3-300/5-1	NHSN718047P5030
XR2, XR3	x	x	400/1	10	1	32 mm	ASK 41.4	CT-XR2/3-400/1-1	NHSN718047P1040
XR2, XR3	x	x	400/5	10	1	32 mm	ASK 41.4	CT-XR2/3-400/5-1	NHSN718047P5040
XR2, XR3	x	x	500/1	10	1	32 mm	ASK 41.4	CT-XR2/3-500/1-1	NHSN718047P1050
XR2, XR3	x	x	500/5	10	1	32 mm	ASK 41.4	CT-XR2/3-500/5-1	NHSN718047P5050
XR2, XR3	x	x	600/1	10	1	32 mm	ASK 41.4	CT-XR2/3-600/1-1	NHSN718047P1060
XR2, XR3	x	x	600/5	10	1	32 mm	ASK 41.4	CT-XR2/3-600/5-1	NHSN718047P5060
XR2, XR3	x	x	300/1	10	0,5	32 mm	ASK 41.4	CT-XR2/3-300/1-0.5	NHSN718056P1030
XR2, XR3	x	x	300/5	10	0,5	32 mm	ASK 41.4	CT-XR2/3-300/5-0.5	NHSN718056P5030
XR2, XR3	x	x	400/1	10	0,5	32 mm	ASK 41.4	CT-XR2/3-400/1-0.5	NHSN718056P1040
XR2, XR3	x	x	400/5	10	0,5	32 mm	ASK 41.4	CT-XR2/3-400/5-0.5	NHSN718056P5040
XR2, XR3	x	x	500/1	10	0,5	32 mm	ASK 41.4	CT-XR2/3-500/1-0.5	NHSN718056P1050
XR2, XR3	x	x	500/5	10	0,5	32 mm	ASK 41.4	CT-XR2/3-500/5-0.5	NHSN718056P5050
XR2, XR3	x	x	600/1	10	0,5	32 mm	ASK 41.4	CT-XR2/3-600/1-0.5	NHSN718056P1060
XR2, XR3	x	x	600/5	10	0,5	32 mm	ASK 41.4	CT-XR2/3-600/5-0.5	NHSN718056P5060
XR2, XR3	x	x	300/5	5	0,2 s	32 mm	ASK 41.4	CT-XR2/3-300/5-0.2S	NHSN718053P5030
XR2, XR3	x	x	400/5	5	0,2 s	32 mm	ASK 41.4	CT-XR2/3-400/5-0.2S	NHSN718053P5040
XR2, XR3	x	x	500/5	5	0,2 s	32 mm	ASK 41.4	CT-XR2/3-500/5-0.2S	NHSN718053P5050
XR2, XR3	x	x	600/5	5	0,2 s	32 mm	ASK 41.4	CT-XR2/3-600/5-0.2S	NHSN718053P5060

—
CT's mounded inside

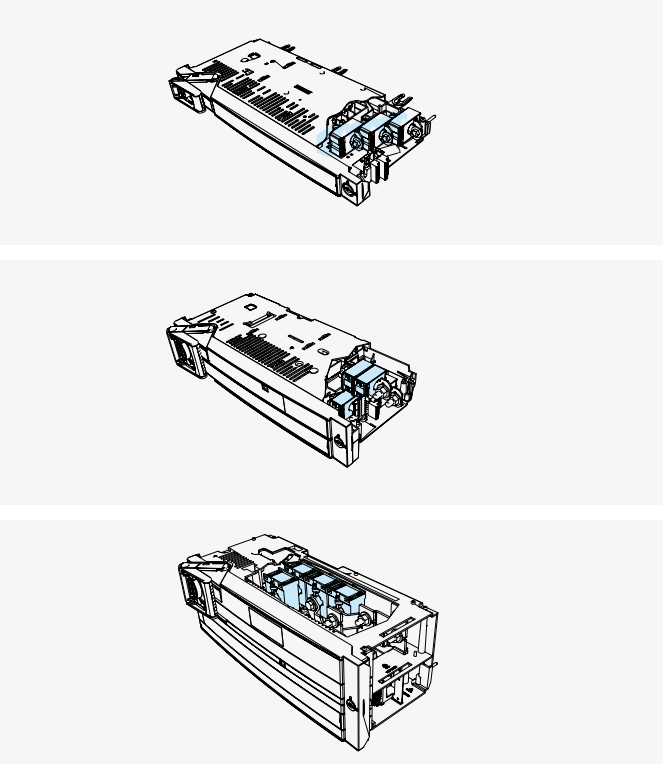

—
CT's mounded to contact extention

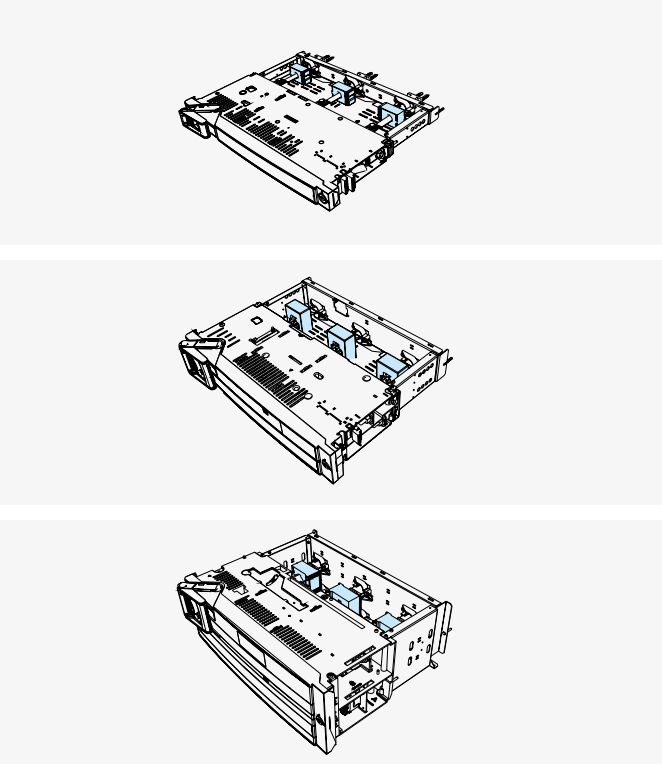

—
Terminal extention kit for CT in XR00 and XR1

CT diameter	Number of terminal extentions	Type	Order code
21mm	1	TE-XR00-21-1	1SEP621867R0001
21mm	3	TE-XR00-21-3	1SEP619446R0001
14mm	1	TE-XR00-14-1	1SEP408630R0001
14mm	3	TE-XR00-14-3	1SEP619447R0001
21mm	2	TE-XR1-21-1	1SEP621868R0001
21mm	3	TE-XR1-21-3	1SEP619448R0001
21mm	4	TE-XR1-14-1	1SEP408526R0001
17mm	3	TE-XR1-14-3	1SEP619449R0001

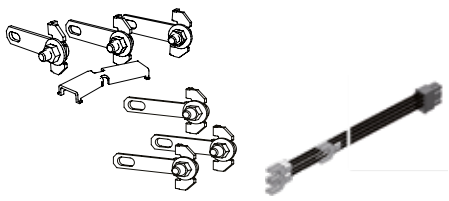

—
Contact extention kit

Ordering information
Cable termination and cable shrouds

The XR is delivered with bolts as standard for connection of cables with lugs. Cable clamps for Al/Cu-cables are available as accessories.

XR00 160 A

	Type of clamp/bolt w/order code	Cable (Al/Cu) size (mm²)		Torque (Nm)	Number of poles	Cable shroud w/order code
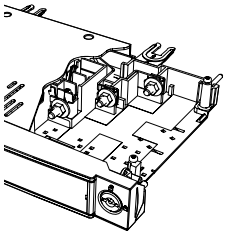	M8 (Standard)	- 95 - 120 [1)]		15 Nm	2 / 3	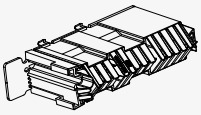 1SEP408496R0001
					N / 4th	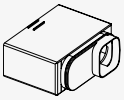 1SEP407775R0001
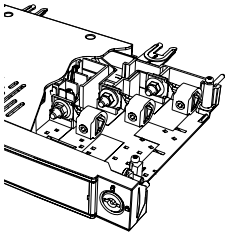	Single clamp 3 pole: 1SEP408499R0001	Re: 10 - 50 Rm: 10 - 50		15 Nm	2 / 3	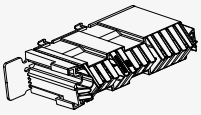 1SEP408496R0001
	4 pole: 1SEP408501R0001	Se: 50 - 70 Sm: 35 - 50	95 70 - 95	18 Nm	N / 4th	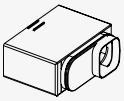 1SEP407775R0001

XR1 250A

	Type of clamp/bolt w/order code	Cable (Al/Cu) size (mm²)		Torque (Nm)	Number of poles	Cable shroud w/order code
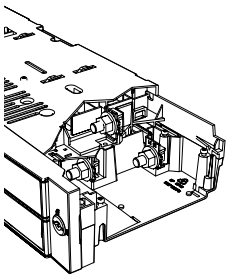	M12 (Standard)	- 240		30 Nm	2 / 3	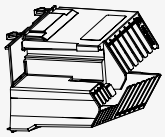 1SEP618211R0001
					N / 4th	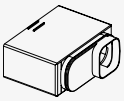 1SEP407775R0001
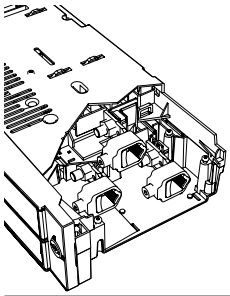	Single clamp 3 pole: 1SEP408500R0001	Re: 16 - 70 Rm: 16 - 35	70 - 150 50 - 185	20 Nm	2 / 3	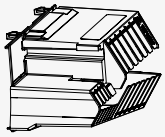 1SEP618211R0001
	4 pole: 1SEP408502R0001	Se: 35 - 70 Sm: 35 - 50	95 - 300 70 - 240	23 Nm	N / 4th	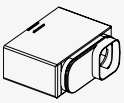 1SEP407775R0001

—

XR1 250 A

	Type of clamp/bolt w/order code	Cable (Al/Cu) size (mm²)	Torque (Nm)	Number of poles	Cable shroud w/order code
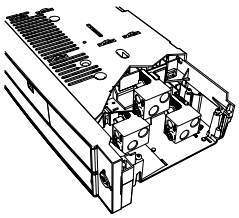	Double clamp 3 pole: 1SEP408205R0003	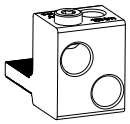 Re: 10 - 150		2 / 3	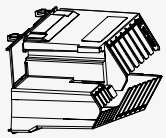 1SEP618211R0001
	4 pole: 1SEP408205R0004	Rm: 10 - 95 Se: 10 - 120 Sm: 10 - 95	15 Nm	N / 4th	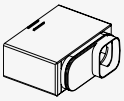 1SEP407775R0001

XR2/3 400/630 A

	Type of clamp/bolt w/order code	Cable (Al/Cu) size (mm²)		Torque (Nm)	Number of poles	Cable shroud w/order code
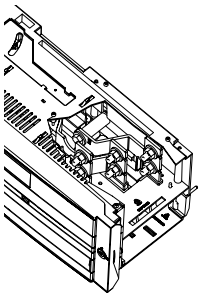					2 / 3	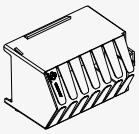 1SEP408496R0001
	M12 (Standard)	2 x 240		30 Nm	N / 4th	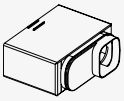 1SEP407775R0001
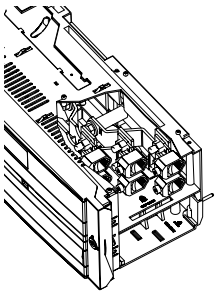	Double clamp 3 pole: 1SEP304446R0002	 Re: 16 - 70	 70 - 150	20 Nm	 2 / 3	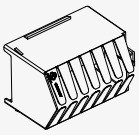 1SEP408498R0001
	4 pole: 1SEP408503R0001	Rm: 16 - 35 Se: 35 - 70 Sm: 35 - 50	50 - 185 95 - 300 70 - 240	23 Nm	 N / 4th	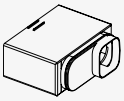 1SEP407775R0001

Ordering information
Contact extensions

—
Contact extensions for 50 mm

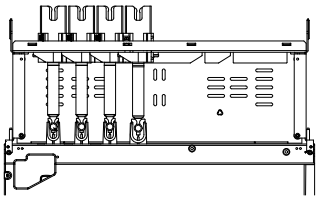

Number of poles	Busbar distance	Suitable for Switch Size	Type	Order code
2	50	XR00	CE-XR00-50-2P	1SEP102127R0002
2	50	XR1	CE-XR1-50-2P	1SEP102128R0002
2	50	XR2, XR3	CE-XR2/3-50-2P	NHP 100495R0003
3	50	XR00	CE-XR00-50-3P	1SEP102127R0001
3	50	XR1	CE-XR1-50-3P	1SEP102128R0001
3	50	XR2, XR3	CE-XR2/3-50-3P	NHP 100495R0001
3	50	XR3 SP	CE-XRM3-50-3P-SP	NHP 100495R0006
4	50	XR00	CE-XR00-50-4P	1SEP102137R0001
4	50	XR1	CE-XR1-50-4P	1SEP102138R0001
4	50	XR2, XR3	CE-XR2/3-50-4P	1SEP101861R0001

—
Contact extensions for 185 mm

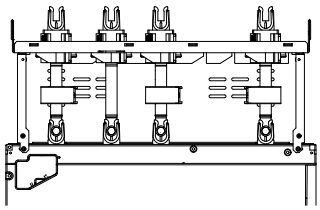

Number of poles	Busbar distance	Suitable for Switch Size	Type	Order code
2	185	XR00	CE-XR00-185-2P	1SEP408541R0001
2	185	XR1	CE-XR1-185-2P	1SEP408542R0001
2	185	XR2, XR3	CE-XR2/3-185-2P	1SEP408543R0001
3	185	XR00	CE-XR00-185-3P	1SEP102135R0001
3	185	XR1	CE-XR1-185-3P	1SEP102136R0001
3	185	XR2, XR3	CE-XR2/3-185-3P	NHP 100886R0001
4	185	XR00	CE-XR00-185-4P	1SEP102208R0001
4	185	XR1	CE-XR1-185-4P	1SEP102209R0001
4	185	XR2, XR3	CE-XR2/3-185-4P	1SEP102198R0001

Ordering information
Common accessories

—
Common accessories

Type	Description	Order code
VBC-XR-50	XR Ventilated blind cover 50 mm IP41	1SEP408528R0001
MGR-XR-200	XR/SR Module guide rails 200 mm	NHP 200947R0002
MGR-XR-400	XR/SR Module guide rails 400 mm	NHP 200947R0003
DHK-XR2/3	XR2/3 Double handle kit	1SEP601098R0001
RT-XR	XR Replacement tool	1SEP601118R0001
CTK-XR	Cable terminal key (tool)	NHSN950001P0006
FCK-XR	Front cover key	GMN 436770P0022
PE-XR	XR Padlock Extension up to 3 padlocks	1SEP408753R0001

—
XR2/3 Double handle kit

—
Replacement tool

—
Cable terminal key

—
Front cover key

—
Padlock extension

Ordering information
SlimLine cassettes and IP busbar covers

SlimLine Cassette
The SlimLine cassette is a complete steel framework with busbar supports. It is used as a framework for easy installation of the SlimLine product range into switchgear systems which do not accept the SlimLine directly.

Facts about the SlimLine cassette:
Available in 4 sizes:
Height = 500 mm, max 10 pcs. 00-devices
Height =1000 mm, max 20 pcs. 00-devices
Height = 1500 mm, max 30 pcs. 00-devices
Height = 2000 mm, max 40 pcs. 00-devices

- Supplied as a flat package without busbars
- Easy and fast assembly using self tapping screws
- For vertical or horizontal installation
- Aluzink coated profiles
- Front profiles as well as top- and bottom plates are black
- Extendable in the busbar direction
- Type tested busbar system
- 65 kA 10 x 40 -> 100 mm cu-busbars
- 3- and 4-pole solutions
- Available for 185 mm busbar distance

IP 20 busbar cover kit
Kit with busbar covers for IP 20 degree of protection.
These can be snapped directly into the cassette.

Kit for 400 mm depth
In order to extend the normal depth of 200 mm in a standard cassette to 400 mm, a special 400 mm extra top and bottom unit is available for replacing the standard top and bottom units.
Two (2) units are required as replacements in one cassette.

Order code 1SEP102079P0001 for 1 unit.

Cassette for 185 mm busbar distance 3- and 4-pole
H = 500 mm
H = 1000 mm
H = 1500 mm
H = 2000 mm

IP20 busbar cover kit Universal 3- and 4-pole, 185 mm
Kit for:
H = 500 mm
H = 1000 mm
H = 1500 mm
H = 2000 mm

—

Rated current for the busbars

CU-profile (mm)	Max current* (A)	Short circuit current (kA) rms 1 sec.	Rated Voltage (V)
10 x 40	715	65	690
10 x 50	852	65	690
10 x 60	985	65	690
10 x 80	1240	65	690
10 x 100	1490	65	690

* All values at 35°C ambient temperature and busbar temperature of 65°C.

—

SlimLine cassettes for busbar distance 185mm

Hight	Type	Order code	Weight (kg)
500mm	CAS-XR-185/500	1SEP102223R0001	12,7
1000mm	CAS-XR-185/1000	1SEP102223R0002	21,2
1500mm	CAS-XR-185/1500	1SEP102223R0003	30
2000mm	CAS-XR-185/2000	1SEP102223R0004	38

—

IP busbar cover for busbar distance 185mm

Hight	Type	Order code	Weight (kg)
500mm	BBC-XR-500	NHP 407062R0001	1,5
1000mm	BBC-XR-1000	NHP 407062R0002	2,8
1500mm	BBC-XR-1500	NHP 407062R0003	4,1
2000mm	BBC-XR-2000	NHP 407062R0004	5,4
200mm	BBC-XR-200	NHP 101474P0001	0,5

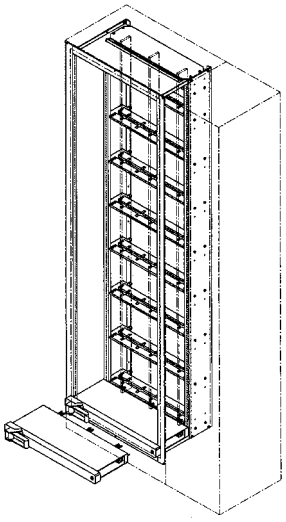

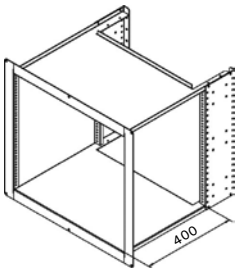

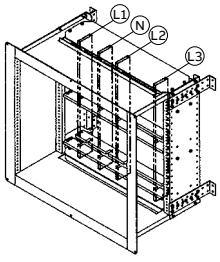

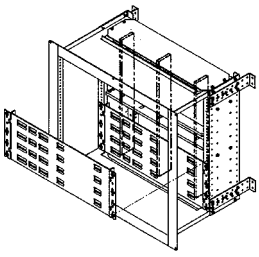

Ordering information
Spareparts and front covers

Spareparts and accessories for switches equiped with ITS2.1 and ITS2.D

Type	Description	Order code
ITS2.1-XR	XR ITS2.1 Control unit for XR 00, 1, 2, 3	1SEP621859R0001
ITS2.D-XR	XR ITS2.D Control unit with Display for XR	1SEP621860R0001
ED-XR-ITS2.1	Ekip Display to add at the ITS2.1 incl. window	1SEP621862R0001
	Ekip T & P XT2-XT4	1SDA066989R0001
MP-XR-ITS2	ITS2 / ITS2.1 / ITS2.D Multiplug (spare part)	1SEP619403P0001

Front covers with operating handle for NH (spare parts)

Type	Suitable for Switch Size	Order code
FC-XR00-NH	XR00	1SEP102219R0002
FC-XR00-NH-R*	XR00	1SEP102219R0005
FC-XR1-NH	XR1	1SEP102222R0002
FC-XR2-NH	XR2	1SEP408521R0001
FC-XR3-NH	XR3	1SEP408521R0003

* This is a red coloured handle

Front covers with operating handle for BS (spare parts)

Type	Suitable for Switch Size	Order code
FC-XR00-BS	XR00	1SEP102219R0012
FC-XR1-BS	XR1	1SEP102222R0012
FC-XR2-BS	XR2	1SEP408521R0011
FC-XR3-BS	XR3	1SEP408521R0013

Technical Data

040 SlimLine XR - Switch Disconnector Fuse

041 Electronic Fuse Monitoring (EFM) and Motor operation (MOT)

Technical Data
SlimLine XR - Switch Disconnector Fuse

Type	Size	XRE	XRM	XRM1	XRE-4P[1)]	XRM-DC[1)]	XRM-BS
Rated operational voltage Ue (V)		500/690	500/690	800	500	230/500	500/690
	00	160/125	160/125		160	125/160	63,100,160/125
	1	250	250	160	250	250	250
	2	400	400		400	400/315	400
Rated operational current Ie (A)	3	630/500	630/500		630	630/400	630/500
Rated insulation voltage Ui (V)		1000	1000	1000	1000	1000	1000
Rated impulse withstand voltage Uimp (V)		8000	8000	8000	8000	8000	8000
Fuse protected short circuit making (kArms)		55	66	50	55	66*	66
Fuse protected short circuit withstand (kArms)		100	100	50	100	100*	100
Rated making and breaking capacity		AC22B	AC23B	AC22B	AC22B	DC23B/ DC21B	AC23B
Rated frequency (Hz)		50/60	50/60	50/60	50/60	-	50/60
	00/1	1600/200	1600/200	200	1600/200	1600/200	1600/200
	2 and 3	1000/200	1000/200		1000/200	1000/200	1000/200
Durability: Total / With current	BS63/BS100				2000/300	2000/300	2000/300
Degree of protection from the front acc. to IEC / EN 60529		IP41	IP41	IP41	IP42	IP41	IP41

Typetested according to IEC 60947-3.
*Tests run at AC

1) Valid also for BS fuses

—
Power losses in SlimLine XR

Size		00	1	2	3
Rated current	(A)	160	250	400	630
XRE/M	(W)	43	78	158	357

The values given include all three phases, but without fuses.

—
Type of Fuses for XRM BS versions

Current	Fuse Type	Current	Fuse Type	Current	Fuse Type
63 A	A3	250 A	B2	400 A	B4
100 A	A3			630 A	3T Lawson
160 A	00T Lawson				

Apparatus overview
Electronic Fuse Monitoring (EFM) and Motor operation (MOT)

—
Technical data for XR EFM

Input voltage limits	DC	AC
Rated AC voltage Ue		340 ... 770VAC
DC 110: Rated DC voltage Ue	45 ... 140VDC	
DC 550: Rated DC voltage Ue	135 ... 550VDC	
Power consumption	2W	< 3VA
Functional characteristics		
Operating time to	≤ 4s	≤ 2s
Measuring accuracy	± 5%	
Signaling relay output terminals (multiplug)		
Normaly open	Terminal 11 - 12	Terminal 11 - 12
Normaly closed	Terminal 12 - 13	Terminal 12 - 13
Rated load, resitive	4A at 24VDC Utilization category DC-1	5A at 24VDC
Rated load, inductive	2A at 24VDC Utilization category DC-13	5A at 24VDC
Rated load, resitive	4A at 240VAC Utilization category AC-1	5A at 240VAC
Rated load, inductive	3A at 240VAC Utilization category AC-15	5A at 240VAC
Wiring capacity (mm^2)	Stranded/solied 0,14 - 1,5	Stranded/solied 0,14 - 1,5
	Stranded with ferrule, with/without plastic sleeve 0,25-0,5/0,25-1,5	Stranded with ferrule, with/without plastic sleeve 0,25-0,5/0,25-1,5
Dielectric properties (IEC 60947-1)		
Rated impulse withstand voltage (U_{imp}), basic insulation	2,5kV/6,0kV	9,8kV
All poles connected togheter/Earth	1,5kV / 1,89kV / 1min 50Hz	3,5kV / 1min 50Hz
All poles connected togheter/Auxiliary contacts	1,89kV / 1min 50Hz	3,5kV / 1min 50Hz
Insulation resitance	> 1MΩ, 500VDC	
EMC characteristics		
Electrostatic Discharge EN 6100-4-2 Air	8kV	± 8kV
Eectrostatic Discharge EN 6100-4-2 Contact	4kV	± 4kV
Electrostatic Fast Transient EN 6100-4-4	Level 3	Level 3
Surge imunity EN 6100-4-5	Level 2	Level 2
Power frequency magnetic field EN 6100-4-8	Level 5	Level 5
MTBF		1.103.137 hours at 80°C

—
Technical data for Motor operation (MOT)

Technical data	XR00 MOT	XR1 MOT	XR2/3 MOT
Operational voltage	24 V DC ± 2 Volt		
Operational consumption peak value *	1,1 A	1,3 A	2,8 A
Signal duration	Min. 0,5 sec. or permanent		
Minimum number of operations	According to IEC / EN 60947-3		

* Recommended power supply 10A.

Dimension drawings

044	Front and side view
045	Distance between busbars (top view)
046	Section Switch
047	Contact extension, 50 mm distance between phases
048	Contact extension, 185 mm distance between phases
049	Ammeters and Current transformers
050	Cassette

Dimension drawings
Front and side view

2 pole / 3 pole

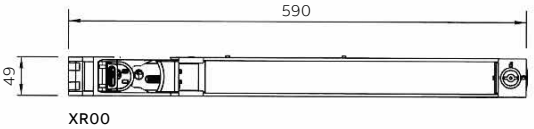

XR00

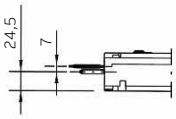

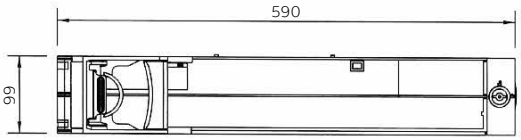

XR1

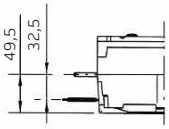

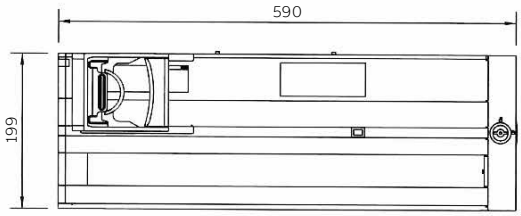

XR2/3

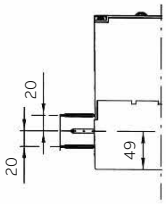

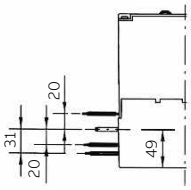

4 pole

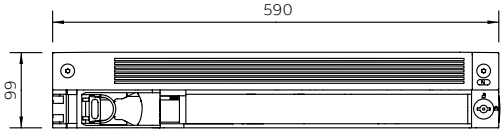

XR00

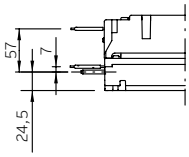

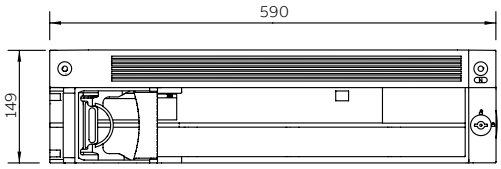

XR1

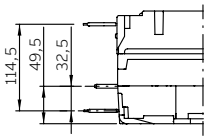

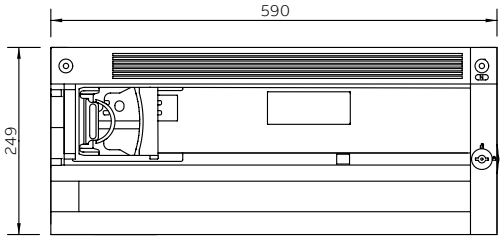

XR2/3

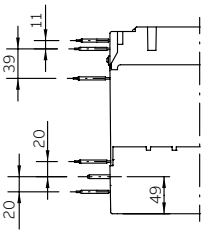

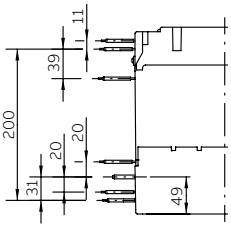

Dimension drawings

Distance between busbars (top view)

50 mm distance between phases

3 pole

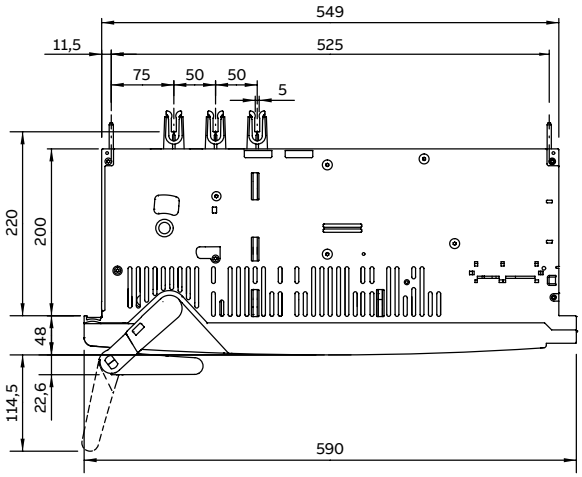

4 pole

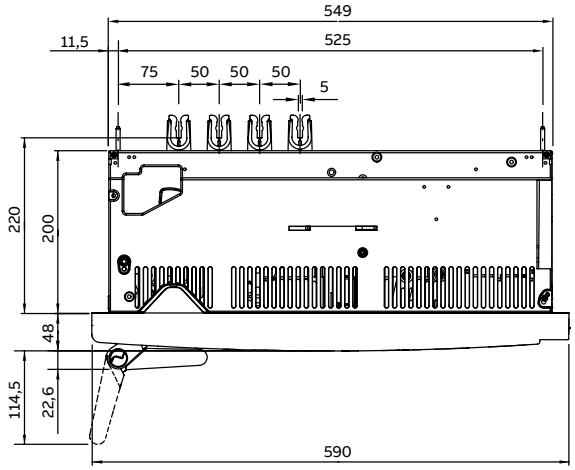

2 pole

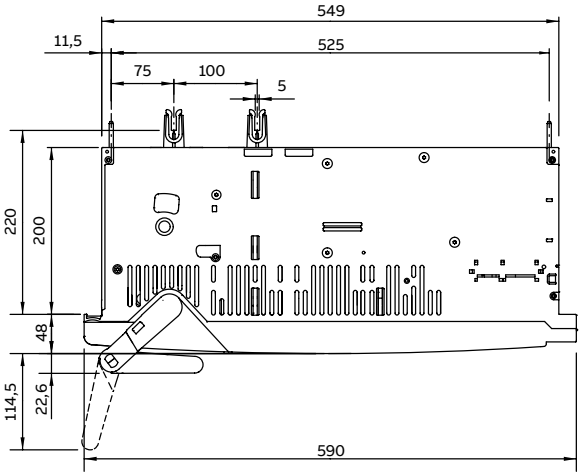

185 mm distance between phases

3 pole

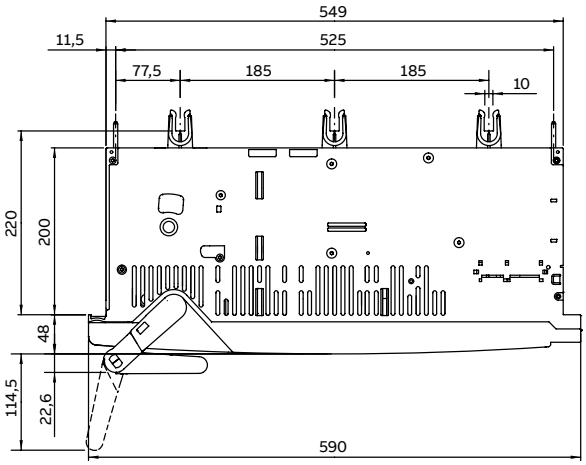

4 pole

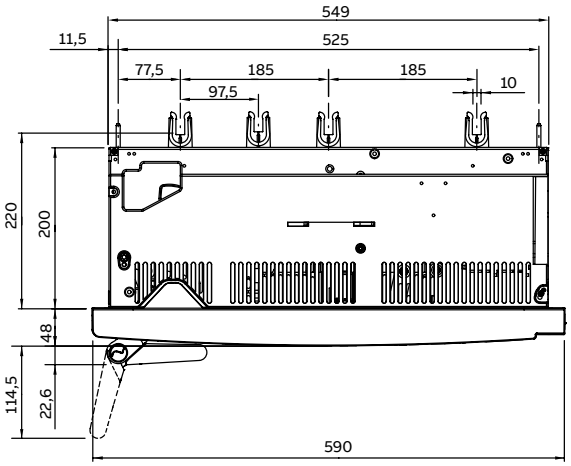

2 pole

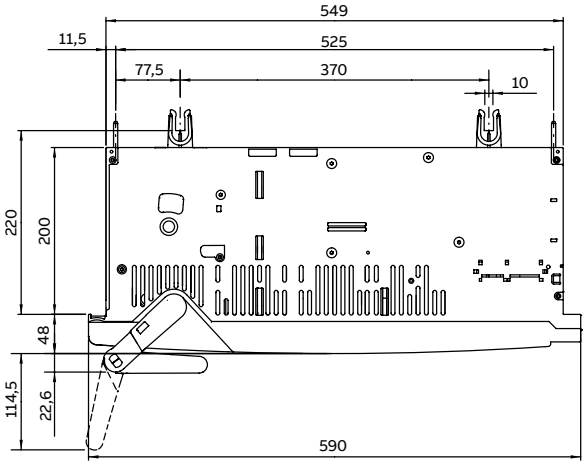

Dimension drawings
Section Switch

50 mm phase distance

XRM3-50-3P-SP

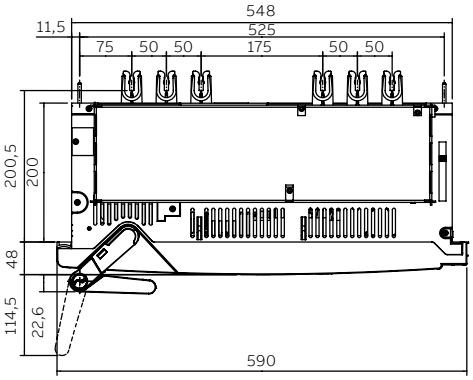

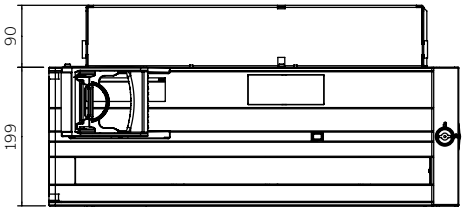

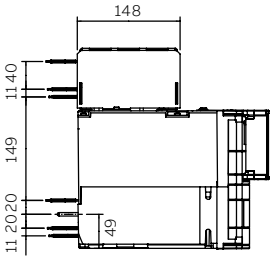

XRM3-50-3P-SS

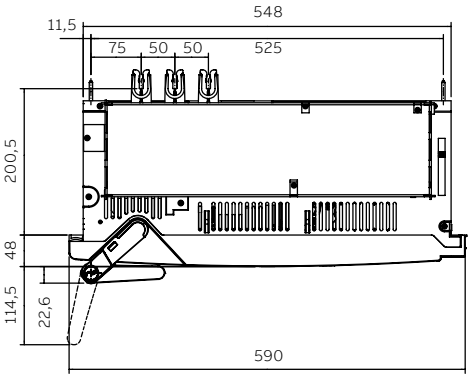

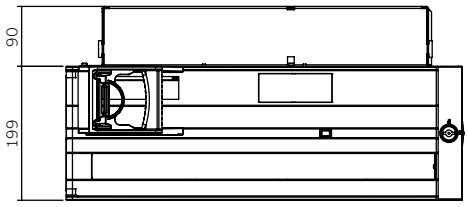

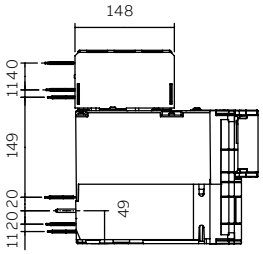

185 mm phase distance

XRM3-185-3P-SS

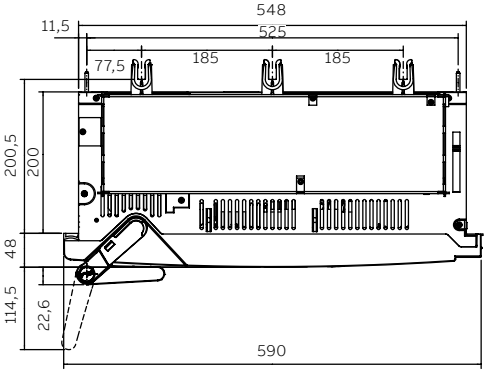

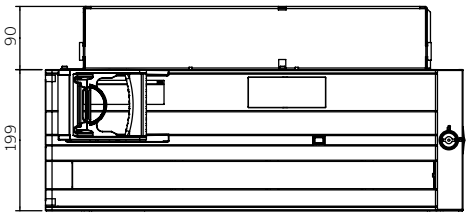

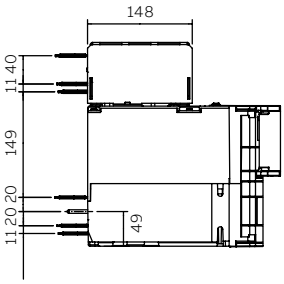

Dimension drawings

Contact extension, 50 mm distance between phases

XR00

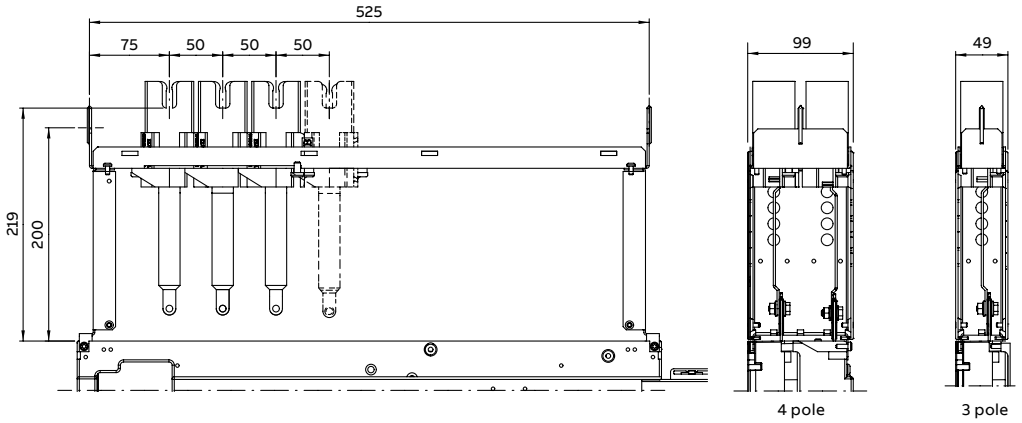

XR1

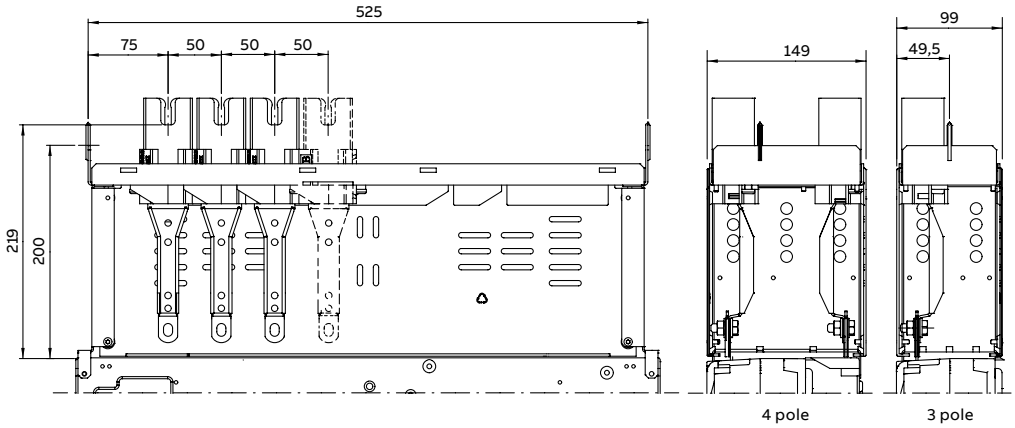

XR2/3

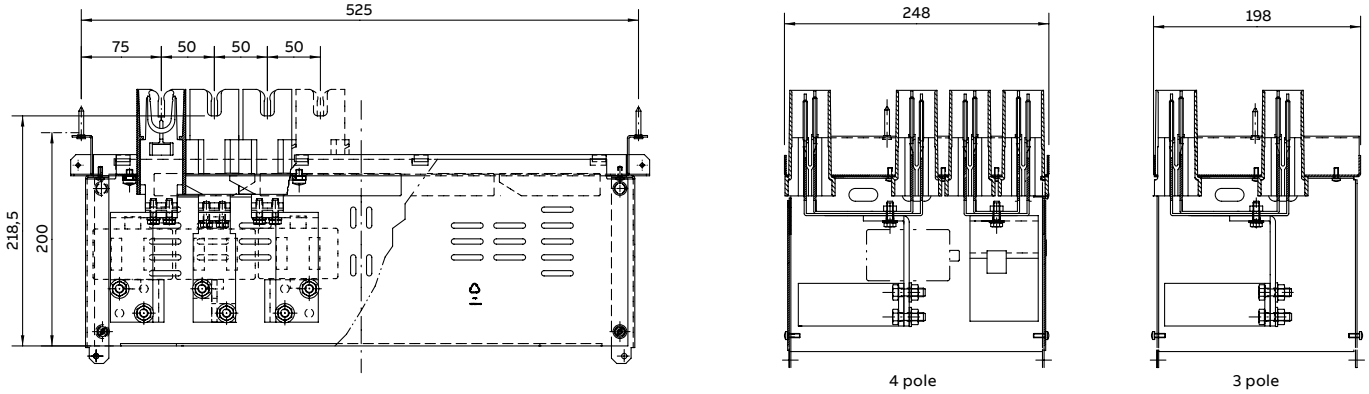

Dimension drawings

Contact extension, 185 mm distance between phases

XR00

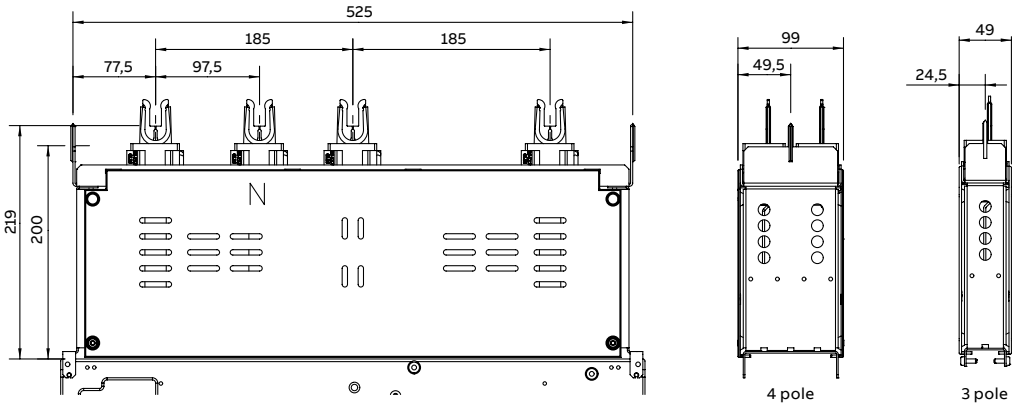

XR1

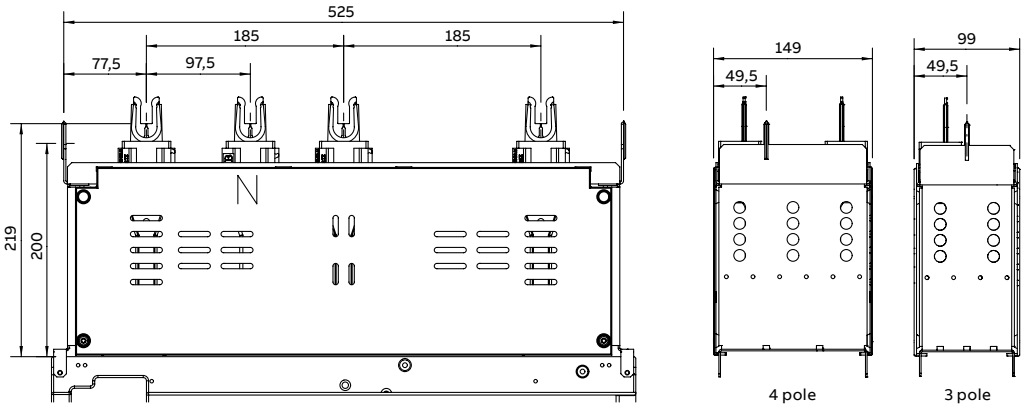

XR2/3

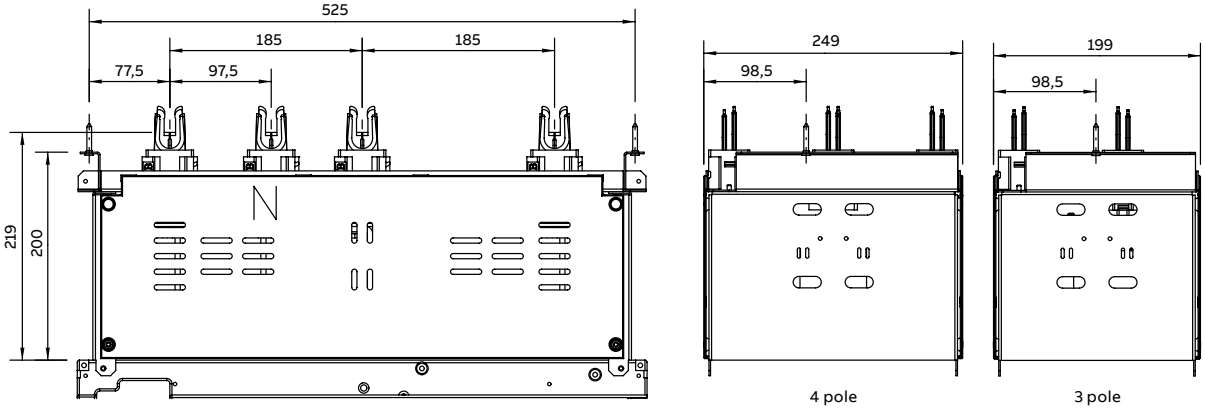

Dimension drawings
Ammeters and Current transformers

Ammeters
CEWE QB 48 maximum demand A-meters

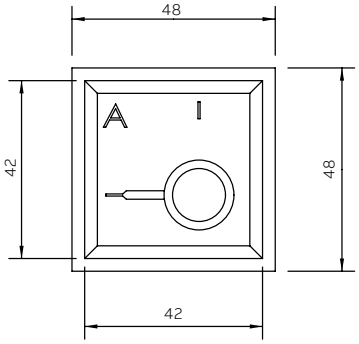

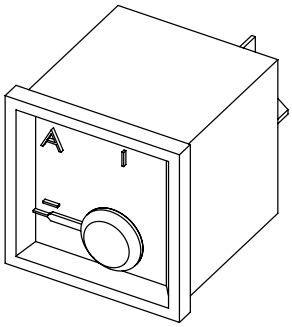

Current transformer XR 00/1

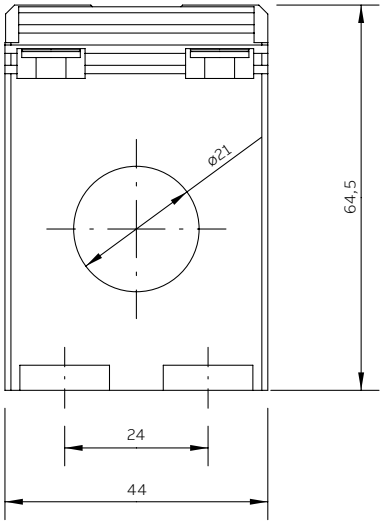

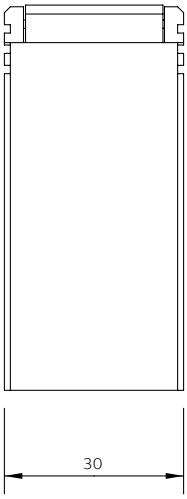

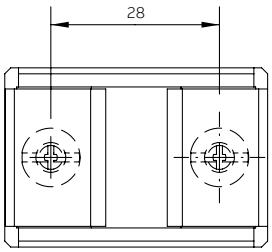

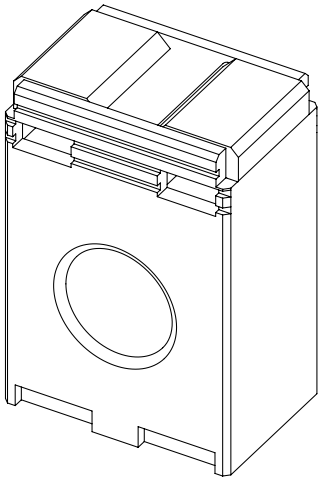

Current transformer XR 2/3

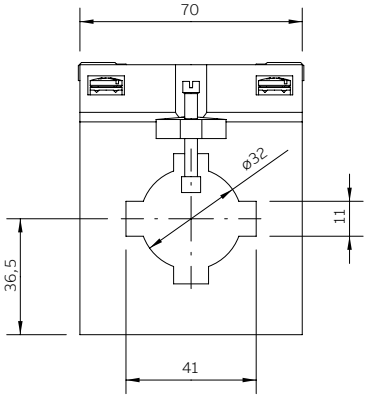

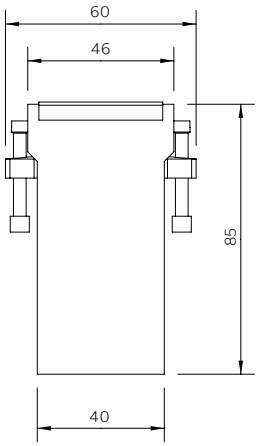

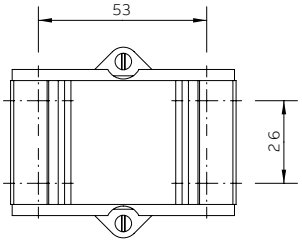

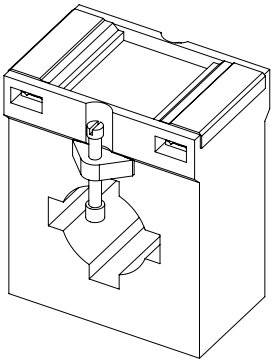

Accessories
Cassette

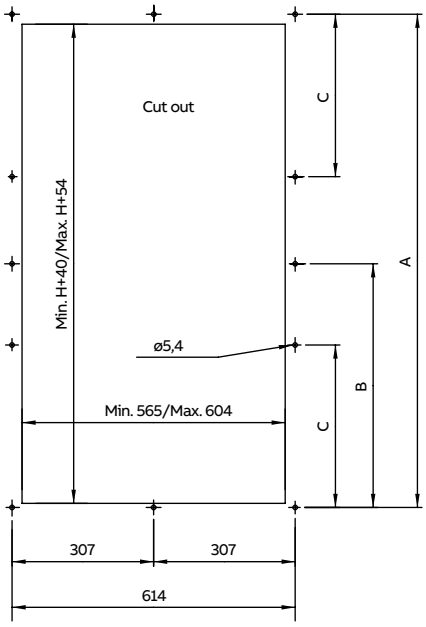

Front view

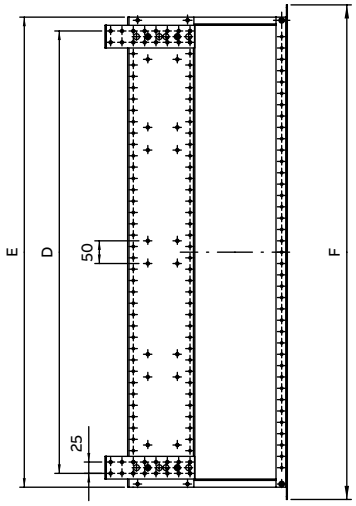

Side view

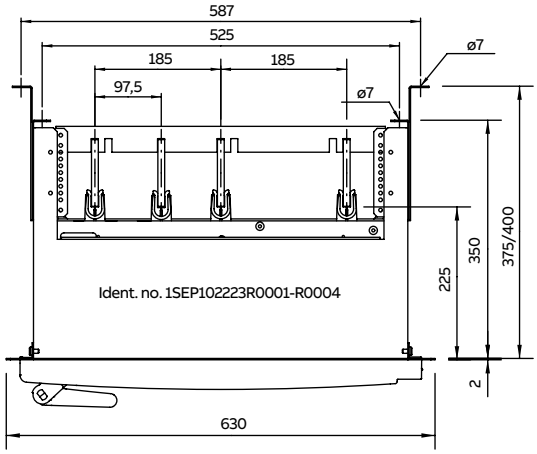

Top view (busbar distance = 185 mm)

H	A	B	C	D	E	F
500	574	-	-	475	536	590
1000	1074	-	358	975	1036	1090
1500	1574	-	525	1475	1536	1590
2000	2074	1037	520	1975	2036	2090

—

ABB Oy
Protection and Connection
P.O. Box 622
FI-65101 Vaasa
Finland

www.abb.com

Find the address of your local sales organization on the ABB homepage:

www.abb.com/contacts
> Low Voltage Products and Systems

Additional information
We reserve the right to make technical changes or modify the contents of this document without prior notice. With regard to purchase orders, the agreed particulars shall prevail. ABB does not accept any responsibility whatsoever for potential errors or possible lack of information in this document.

We reserve all rights in this document and in the subject matter and illustrations contained therein. Any reproduction, disclosure to third parties or utilization of its contents – in whole or in parts – is forbidden without prior written consent of ABB.

© Copyright 2017 ABB. All rights reserved.

1SEC311001D0201 - 2018.01