Relion® 650 series

Busbar protection REB650
Application Manual

Power and productivity
for a better world™

Document ID: 1MRK 505 276-UEN
Issued: June 2012
Revision: -
Product version: 1.2

© Copyright 2012 ABB. All rights reserved

Copyright

This document and parts thereof must not be reproduced or copied without written permission from ABB, and the contents thereof must not be imparted to a third party, nor used for any unauthorized purpose.

The software and hardware described in this document is furnished under a license and may be used or disclosed only in accordance with the terms of such license.

Trademarks

ABB and Relion are registered trademarks of the ABB Group. All other brand or product names mentioned in this document may be trademarks or registered trademarks of their respective holders.

Warranty

Please inquire about the terms of warranty from your nearest ABB representative.

ABB AB

Substation Automation Products

SE-721 59 Västerås

Sweden

Telephone: +46 (0) 21 32 50 00

Facsimile: +46 (0) 21 14 69 18

http://www.abb.com/substationautomation

Disclaimer

The data, examples and diagrams in this manual are included solely for the concept or product description and are not to be deemed as a statement of guaranteed properties. All persons responsible for applying the equipment addressed in this manual must satisfy themselves that each intended application is suitable and acceptable, including that any applicable safety or other operational requirements are complied with. In particular, any risks in applications where a system failure and/or product failure would create a risk for harm to property or persons (including but not limited to personal injuries or death) shall be the sole responsibility of the person or entity applying the equipment, and those so responsible are hereby requested to ensure that all measures are taken to exclude or mitigate such risks.

This document has been carefully checked by ABB but deviations cannot be completely ruled out. In case any errors are detected, the reader is kindly requested to notify the manufacturer. Other than under explicit contractual commitments, in no event shall ABB be responsible or liable for any loss or damage resulting from the use of this manual or the application of the equipment.

Conformity

This product complies with the directive of the Council of the European Communities on the approximation of the laws of the Member States relating to electromagnetic compatibility (EMC Directive 2004/108/EC) and concerning electrical equipment for use within specified voltage limits (Low-voltage directive 2006/95/EC). This conformity is the result of tests conducted by ABB in accordance with the product standards EN 50263 and EN 60255-26 for the EMC directive, and with the product standards EN 60255-1 and EN 60255-27 for the low voltage directive. The product is designed in accordance with the international standards of the IEC 60255 series.

Table of contents

Section 1 Introduction....11
This manual....11
Intended audience....11
Product documentation....12
Product documentation set....12
Document revision history....13
Related documents....13
Symbols and conventions....14
Symbols....14
Document conventions....15

Section 2 Application....17
REB650 application....17
Available functions....18
Main protection functions....18
Back-up protection functions....19
Control and monitoring functions....19
Communication....22
Basic IED functions....23
REB650 application examples....24
Adaptation to different applications....24
Protection of a two section busbar with additional bus coupler protection functions....25
Protection of a single section busbar....26
Functionality table....26

Section 3 REB650 setting examples....29
Busbar protection application....29
Calculating general settings for analogue TRM inputs 6I 4U....31
Calculating general settings for analogue AIM inputs 6I 4U....32
Preprocessing blocks (SMAI)....33
Calculating settings for global base values for setting function GBSVAL....33
Calculating settings for busbar high impedance differential protection HZPDIF....33
Calculating settings for breaker failure protection 3-phase activation and output CCRBRF....35
Calculating settings for pole discordance protection CCRPLD....37

Section 4 Analog inputs....39
Introduction....39
Setting guidelines....39
Setting of the phase reference channel....39
Setting of current channels....40
Example 1....40
Example 2....41
Examples on how to connect, configure and set CT inputs for most commonly used CT connections....42
Example on how to connect a star connected three-phase CT set to the IED....43
Setting of voltage channels....45
Example....45
Examples how to connect, configure and set VT inputs for most commonly used VT connections....46
Examples on how to connect a three phase-to-earth connected VT to the IED....47
Example how to connect the open delta VT to the IED for low impedance earthed or solidly earthed power systems....48

Section 5 Local human-machine interface....51
Local HMI....51
Display....51
LEDs....53
Keypad....53
Local HMI functionality....54
Protection and alarm indication....54
Parameter management 56
Front communication....56

Section 6 Differential protection....59
1Ph High impedance differential protection HZPDIF 59
Identification....59
Application....59
The basics of the high impedance principle....60
Setting guidelines....66
Configuration....66
Settings of protection function....66
Busbar protection....66
Alarm level operation....69
Double busbar applications....70

Section 7 Current protection....71

Four step phase overcurrent protection 3-phase output OC4PTOC 71
Identification....71
Application....71
Setting guidelines....72
Settings for steps 1 to 4 73
2nd harmonic restrain....75
Four step residual overcurrent protection, zero, negative sequence direction EF4PTOC 81
Identification....81
Application....81
Setting guidelines....83
Settings for steps 1 and 4 83
Common settings for all steps....85
2nd harmonic restrain....86
Thermal overload protection, two time constants TRPTTR 87
Identification....87
Application....87
Setting guideline....88
Breaker failure protection 3-phase activation and output CCRBRF 90
Identification....90
Application....90
Setting guidelines....91
Pole discordance protection CCRPLD 93
Identification....93
Application....93
Setting guidelines....94
Negative sequence based overcurrent function DNSPTOC 95
Identification....95
Application....95
Setting guidelines....95

Section 8 Voltage protection....97
Two step undervoltage protection UV2PTUV 97
Identification....97
Application....97
Setting guidelines....98
Equipment protection, such as for motors and generators....98
Disconnected equipment detection....98
Power supply quality 98
Voltage instability mitigation....98
Backup protection for power system faults....98

Settings for Two step undervoltage protection.....99
Two step overvoltage protection OV2PTOV 100
Identification.....100
Application.....100
Setting guidelines.....101
Two step residual overvoltage protection ROV2PTOV 103
Identification.....103
Application.....103
Setting guidelines.....104
Power supply quality.....104
High impedance earthed systems.....104
Direct earthed system.....105
Settings for Two step residual overvoltage protection.....106

Section 9 Secondary system supervision.....109
Fuse failure supervision SDDRFUF.....109
Identification.....109
Application.....109
Setting guidelines.....110
General.....110
Setting of common parameters.....110
Negative sequence based.....111
Zero sequence based.....112
Delta U and delta I 112
Dead line detection.....113
Breaker close/trip circuit monitoring TCSSCBR.....113
Identification.....113
Application.....113

Section 10 Control.....119
Apparatus control 119
Identification.....119
Application.....119
Interaction between modules.....122
Setting guidelines.....124
Bay control (QCBAY).....124
Logic rotating switch for function selection and LHMI presentation SLGGIO.....124
Identification.....124
Application.....124
Setting guidelines.....125
Selector mini switch VSGGIO.....125
Identification.....125
Application.....125

Setting guidelines.....126
IEC61850 generic communication I/O functions DPGGIO.....126
Identification.....126
Application.....126
Setting guidelines.....127
Single point generic control 8 signals SPC8GGIO.....127
Identification.....127
Application.....127
Setting guidelines.....127
Automation bits AUTOBITS.....128
Identification.....128
Application.....128
Setting guidelines.....128

Section 11 Logic.....129
Tripping logic common 3-phase output SMPPTRC 129
Identification.....129
Application.....129
Three-phase tripping 129
Lock-out.....130
Blocking of the function block.....130
Setting guidelines.....130
Trip matrix logic TMAGGIO.....131
Identification.....131
Application.....131
Setting guidelines.....131
Configurable logic blocks.....132
Identification.....132
Application.....133
Configuration.....133
Fixed signals FXDSIGN.....134
Identification.....134
Application.....134
Boolean 16 to integer conversion B16I.....135
Identification.....135
Application.....135
Setting guidelines.....136
Boolean 16 to integer conversion with logic node representation B16IFCVI.....136
Identification.....136
Application.....136
Setting guidelines.....136
Integer to boolean 16 conversion IB16A.....136
Identification.....136

Application.....137
Setting guidelines.....137
Integer to boolean 16 conversion with logic node representation IB16FCVB.....137
Identification.....137
Application.....137
Settings.....137

Section 12 Monitoring.....139
IEC61850 generic communication I/O functions SPGGIO.....139
Identification.....139
Application.....139
Setting guidelines.....139
IEC61850 generic communication I/O functions 16 inputs SP16GGIO.....139
Identification.....139
Application.....139
Setting guidelines.....140
IEC61850 generic communication I/O functions MVGGIO.....140
Identification.....140
Application.....140
Setting guidelines.....140
Measurements.....141
Identification.....141
Application.....141
Setting guidelines.....143
Setting examples.....145
Measurement function application for a 400 kV OHL.....146
Event counter CNTGGIO.....148
Identification.....148
Application.....148
Setting guidelines.....148
Disturbance report 149
Identification.....149
Application.....149
Setting guidelines.....150
Binary input signals.....153
Analog input signals.....153
Sub-function parameters.....154
Consideration.....154
Measured value expander block MVEXP.....155
Identification.....155
Application.....155
Setting guidelines.....156

Station battery supervision SPVNZBAT.....156
Identification.....156
Application.....156
Insulation gas monitoring function SSIMG.....157
Identification.....157
Application.....157
Insulation liquid monitoring function SSIML.....157
Identification.....157
Application.....157
Circuit breaker condition monitoring SSCBR.....157
Identification.....157
Application.....158

Section 13 Metering.....161
Pulse counter PCGGIO.....161
Identification.....161
Application.....161
Setting guidelines.....161
Energy calculation and demand handling EPTMMTR.....162
Identification.....162
Application.....162
Setting guidelines.....163

Section 14 Station communication.....165
IEC61850-8-1 communication protocol 165
Identification.....165
Application.....165
Horizontal communication via GOOSE.....167
Setting guidelines.....169
DNP3 protocol.....169
IEC 60870-5-103 communication protocol.....170

Section 15 Basic IED functions.....171
Self supervision with internal event list 171
Identification.....171
Application.....171
Time synchronization.....172
Identification.....172
Application.....172
Setting guidelines.....173
Parameter setting group handling.....175
Identification.....175
Application.....175
Setting guidelines.....176

Test mode functionality TESTMODE.....176
Identification.....176
Application.....176
Setting guidelines.....176
Change lock CHNGLCK.....177
Identification.....177
Application.....177
Setting guidelines.....178
IED identifiers TERMINALID.....178
Identification.....178
Application.....178
Customer specific settings.....178
Product information PRODINF.....178
Identification.....178
Application.....179
Factory defined settings.....179
Primary system values PRIMVAL.....180
Identification.....180
Application.....180
Signal matrix for analog inputs SMAI.....180
Identification.....180
Application.....180
Setting guidelines.....181
Summation block 3 phase 3PHSUM.....183
Identification.....183
Application.....183
Setting guidelines.....184
Global base values GBASVAL.....184
Identification.....184
Application.....184
Setting guidelines.....184
Authority check ATHCHCK.....185
Identification.....185
Application.....185
Authorization handling in the IED.....185
Authority status ATHSTAT.....186
Identification.....186
Application.....186
Denial of service.....187
Identification.....187
Application.....187
Setting guidelines.....187

Section 16 Requirements.....189

Current transformer requirements.....189
Current transformer classification.....189
Conditions.....190
Fault current.....191
Secondary wire resistance and additional load.....191
General current transformer requirements.....191
Rated equivalent secondary e.m.f. requirements.....192
1 Ph high impedance differential protection.....192
Breaker failure protection.....193
Non-directional instantaneous and definitive time, phase and residual overcurrent protection.....193
Non-directional inverse time delayed phase and residual overcurrent protection.....194
Directional phase and residual overcurrent protection.....195
Current transformer requirements for CTs according to other standards.....196
Current transformers according to IEC 60044-1, class P, PR.....196
Current transformers according to IEC 60044-1, class PX, IEC 60044-6, class TPS (and old British Standard, class X).....196
Current transformers according to ANSI/IEEE.....196
Voltage transformer requirements.....197
SNTP server requirements.....198
SNTP server requirements.....198

Section 17 Glossary.....199

Section 1 Introduction

1.1 This manual

The application manual contains application descriptions and setting guidelines sorted per function. The manual can be used to find out when and for what purpose a typical protection function can be used. The manual can also be used when calculating settings.

1.2 Intended audience

This manual addresses the protection and control engineer responsible for planning, pre-engineering and engineering.

The protection and control engineer must be experienced in electrical power engineering and have knowledge of related technology, such as protection schemes and communication principles.

1.3 Product documentation

1.3.1 Product documentation set

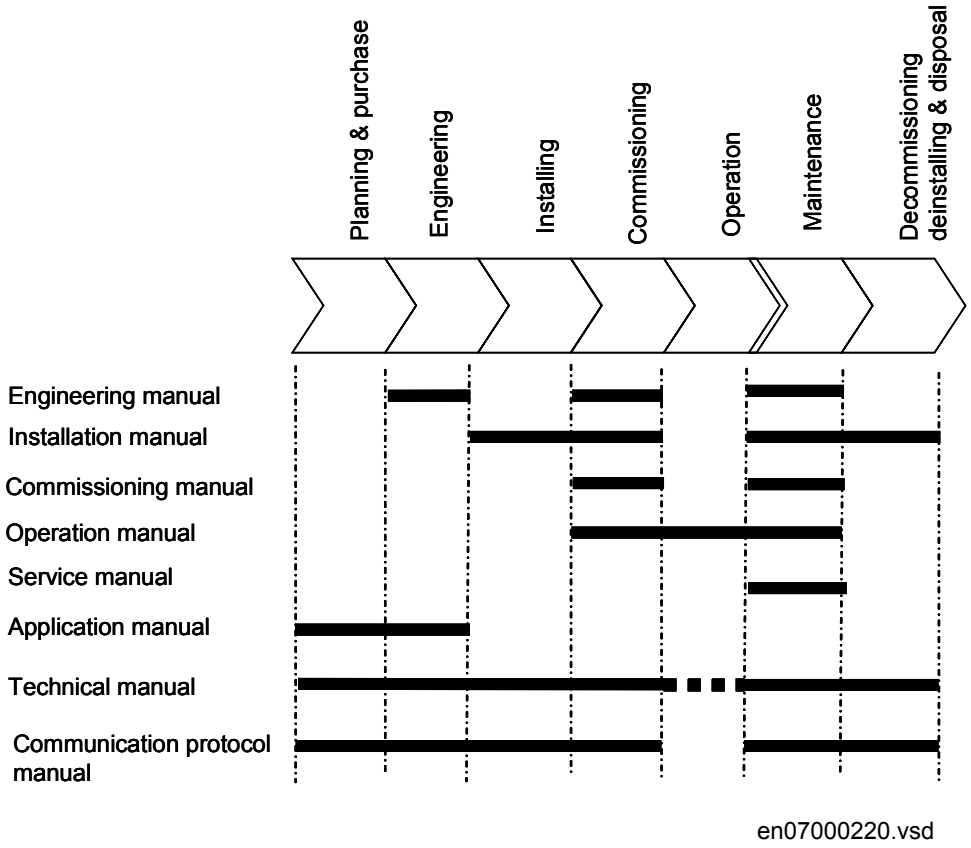

Figure 1: The intended use of manuals in different lifecycles

The engineering manual contains instructions on how to engineer the IEDs using the different tools in PCM600. The manual provides instructions on how to set up a PCM600 project and insert IEDs to the project structure. The manual also recommends a sequence for engineering of protection and control functions, LHMI functions as well as communication engineering for IEC 60870-5-103, IEC 61850 and DNP3.

The installation manual contains instructions on how to install the IED. The manual provides procedures for mechanical and electrical installation. The chapters are organized in chronological order in which the IED should be installed.

The commissioning manual contains instructions on how to commission the IED. The manual can also be used by system engineers and maintenance personnel for assistance during the testing phase. The manual provides procedures for checking of external circuitry and energizing the IED, parameter setting and configuration as

well as verifying settings by secondary injection. The manual describes the process of testing an IED in a substation which is not in service. The chapters are organized in chronological order in which the IED should be commissioned.

The operation manual contains instructions on how to operate the IED once it has been commissioned. The manual provides instructions for monitoring, controlling and setting the IED. The manual also describes how to identify disturbances and how to view calculated and measured power grid data to determine the cause of a fault.

The service manual contains instructions on how to service and maintain the IED. The manual also provides procedures for de-energizing, de-commissioning and disposal of the IED.

The application manual contains application descriptions and setting guidelines sorted per function. The manual can be used to find out when and for what purpose a typical protection function can be used. The manual can also be used when calculating settings.

The technical manual contains application and functionality descriptions and lists function blocks, logic diagrams, input and output signals, setting parameters and technical data sorted per function. The manual can be used as a technical reference during the engineering phase, installation and commissioning phase, and during normal service.

The communication protocol manual describes a communication protocol supported by the IED. The manual concentrates on vendor-specific implementations.

The point list manual describes the outlook and properties of the data points specific to the IED. The manual should be used in conjunction with the corresponding communication protocol manual.

1.3.2 Document revision history

Document revision/date	History
-/June 2012	First release

1.3.3 Related documents

Documents related to REB650	Identity number
Application manual	1MRK 505 276-UEN
Technical manual	1MRK 505 277-UEN
Commissioning manual	1MRK 505 278-UEN
Product Guide, configured	1MRK 505 279-BEN
Type test certificate	1MRK 505 279-TEN
Application notes for Circuit Breaker Control	1MRG006806

650 series manuals	Identity number
Communication protocol manual, DNP3	1MRK 511 257-UEN
Communication protocol manual, IEC 61850–8–1	1MRK 511 258-UEN
Communication protocol manual, IEC 60870-5-103	1MRK 511 259-UEN
Cyber Security deployment guidelines	1MRK 511 268-UEN
Point list manual, DNP3	1MRK 511 260-UEN
Engineering manual	1MRK 511 261-UEN
Operation manual	1MRK 500 095-UEN
Installation manual	1MRK 514 015-UEN

1.4 Symbols and conventions

1.4.1 Symbols

The electrical warning icon indicates the presence of a hazard which could result in electrical shock.

The warning icon indicates the presence of a hazard which could result in personal injury.

The caution icon indicates important information or warning related to the concept discussed in the text. It might indicate the presence of a hazard which could result in corruption of software or damage to equipment or property.

The information icon alerts the reader of important facts and conditions.

The tip icon indicates advice on, for example, how to design your project or how to use a certain function.

Although warning hazards are related to personal injury, it is necessary to understand that under certain operational conditions, operation of damaged equipment may result in degraded process performance leading to personal injury or death. Therefore, comply fully with all warning and caution notices.

1.4.2 Document conventions

A particular convention may not be used in this manual.

- Abbreviations and acronyms in this manual are spelled out in the glossary. The glossary also contains definitions of important terms.
- Push button navigation in the LHMI menu structure is presented by using the push button icons.
  To navigate between the options, use ↑ and ↓.
- HMI menu paths are presented in bold.
  Select **Main menu/Settings**.
- LHMI messages are shown in Courier font.
  To save the changes in non-volatile memory, select `Yes` and press ↵.
- Parameter names are shown in italics.
  The function can be enabled and disabled with the *Operation* setting.
- The ^ character in front of an input or output signal name in the function block symbol given for a function, indicates that the user can set an own signal name in PCM600.
- The * character after an input or output signal name in the function block symbol given for a function, indicates that the signal must be connected to another function block in the application configuration to achieve a valid application configuration.

Section 2 Application

2.1 REB650 application

The numerical busbar protection REB650 IED provides its users with a wide variety of application opportunities. Designed primarily for the protection of single busbars with or without sectionalizers in high impedance based applications, it also offers high impedance differential protection for generators, autotransformers, shunt reactors and capacitor banks. Its I/O capability allows you to protect up to three 3-phase high impedance differential protection zones with a single IED.

A number of additional protection functions are available for the protection of the bus coupler bay. The additional protection functions include different types of phase and earth fault overcurrent protection and overvoltage/undervoltage protection.

One pre-configured package has been defined for the following application:

- Complete busbar protection for two busbar sections (zone 1 and 2), with the possibility for check zone (A03)

For the high impedance differential protection, the differential current process is made in the analogue current transformer circuits where the differential current is connected to the IED via a high ohmic resistor. In REB650, a current input is used for each phase and protection zone.

The package is configured and ready for direct use. Analogue inputs and binary input/output circuits are pre-defined.

The pre-configured IED can be changed and adapted to suit specific applications with the graphical configuration tool.

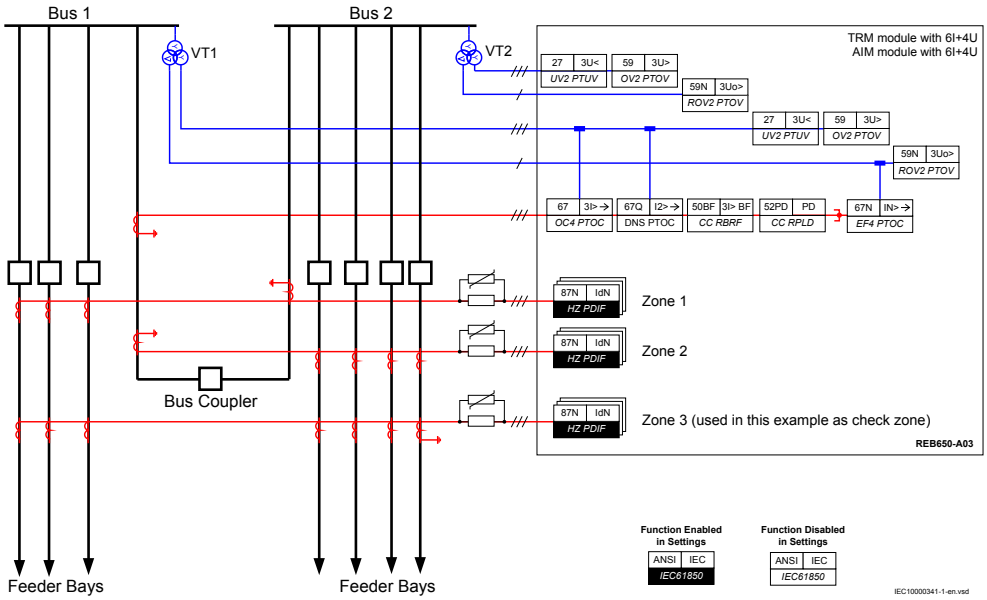

Figure 2: A typical busbar protection for two busbar sections with the possibility of a check zone

2.2 Available functions

2.2.1 Main protection functions

IEC 61850/ Function block name	ANSI	Function description	Busbar	
			REB650	REB650 (A03) HiZ/3Ph
Differential protection				
HZPDIF	87	1Ph High impedance differential protection	1–9	9

2.2.2 Back-up protection functions

IEC 61850/ Function block name	ANSI	Function description	Busbar	
			REB650	REB650 (A03) HiZ/3Ph
Current protection				
OC4PTOC	51	Four step phase overcurrent protection, 3–phase output	0–1	1
EF4PTOC	51N/67N	Four step residual overcurrent protection, zero/negative sequence direction	0–1	1
TRPTTR	49	Thermal overload protection, two time constants	0–1	1
CCRBRF	50BF	Breaker failure protection, 3–phase activation and output	0–1	1
CCRPLD	52PD	Pole discordance protection	0–1	1
DNSPTOC	46	Negative sequence based overcurrent function	0–1	1
Voltage protection				
UV2PTUV	27	Two step undervoltage protection	0–2	2
OV2PTOV	59	Two step overvoltage protection	0–2	2
ROV2PTOV	59N	Two step residual overvoltage protection	0–2	2

2.2.3 Control and monitoring functions

IEC 61850/Function block name	ANSI	Function description	Busbar	
			REB650	REB650 (A03) HiZ/3Ph
Control				
QCBAY		Bay control	1	1
LOCREM		Handling of LR-switch positions	1	1
LOCREMCTRL		LHMI control of Permitted Source To Operate (PSTO)	1	1
CBC3		Circuit breaker for 3CB	1	1
SLGGIO		Logic Rotating Switch for function selection and LHMI presentation	15	15
VSGGIO		Selector mini switch extension	20	20
DPGGIO		IEC 61850 generic communication I/O functions double point	16	16
SPC8GGIO		Single point generic control 8 signals	5	5
AUTOBITS		AutomationBits, command function for DNP3.0	3	3
I103CMD		Function commands for IEC60870-5-103	1	1
I103IEDCMD		IED commands for IEC60870-5-103	1	1

Table continues on next page

IEC 61850/Function block name	ANSI	Function description	Busbar	
			REB650	REB650 (A03) HiZ/3Ph
I103USRCMD		Function commands user defined for IEC60870-5-103	4	4
I103GENCMD		Function commands generic for IEC60870-5-103	50	50
I103POSCMD		IED commands with position and select for IEC60870-5-103	50	50
Secondary system supervision				
SDDRFUF		Fuse failure supervision	0–2	2
TCSSCBR		Breaker close/trip circuit monitoring	3	3
Logic				
SMPPTRC	94	Tripping logic, common 3–phase output	1–6	6
TMAGGIO		Trip matrix logic	12	12
OR		Configurable logic blocks, OR gate	283	283
INVERTER		Configurable logic blocks, Inverter gate	140	140
PULSETIMER		Configurable logic blocks, Pulse timer	40	40
GATE		Configurable logic blocks, Controllable gate	40	40
XOR		Configurable logic blocks, exclusive OR gate	40	40
LOOPDELAY		Configurable logic blocks, loop delay	40	40
TIMERSET		Configurable logic blocks, timer function block	40	40
AND		Configurable logic blocks, AND gate	280	280
SRMEMORY		Configurable logic blocks, set-reset memory flip-flop gate	40	40
RSMEMORY		Configurable logic blocks, reset-set memory flip-flop gate	40	40
FXDSIGN		Fixed signal function block	1	1
B16I		Boolean 16 to Integer conversion	16	16
B16IFCVI		Boolean 16 to Integer conversion with logic node representation	16	16
IB16A		Integer to Boolean 16 conversion	16	16
IB16FCVB		Integer to Boolean 16 conversion with logic node representation	16	16
Monitoring				
CVMMXN		Measurements	6	6
CMMXU		Phase current measurement	10	10
VMMXU		Phase-phase voltage measurement	6	6
CMSQI		Current sequence component measurement	6	6
VMSQI		Voltage sequence measurement	6	6
VNMMXU		Phase-neutral voltage measurement	6	6
AISVBAS		Function block for service values presentation of the analog inputs	1	1

Table continues on next page

IEC 61850/Function block name	ANSI	Function description	Busbar	
			REB650	REB650 (A03) HiZ/3Ph
TM_P_P2		Function block for service values presentation of primary analog inputs 600TRM	1	1
AM_P_P4		Function block for service values presentation of primary analog inputs 600AIM	1	1
TM_S_P2		Function block for service values presentation of secondary analog inputs 600TRM	1	1
AM_S_P4		Function block for service values presentation of secondary analog inputs 600AIM	1	1
CNTGGIO		Event counter	5	5
DRPRDRE		Disturbance report	1	1
AxRADR		Analog input signals	4	4
BxRBDR		Binary input signals	6	6
SPGGIO		IEC 61850 generic communication I/O functions	64	64
SP16GGIO		IEC 61850 generic communication I/O functions 16 inputs	16	16
MVGGIO		IEC 61850 generic communication I/O functions	16	16
MVEXP		Measured value expander block	66	66
SPVNZBAT		Station battery supervision	0–1	1
SSIMG	63	Insulation gas monitoring function	0–2	2
SSIML	71	Insulation liquid monitoring function	0–2	2
SSCBR		Circuit breaker condition monitoring	0–1	1
I103MEAS		Measurands for IEC60870-5-103	1	1
I103MEASUSR		Measurands user defined signals for IEC60870-5-103	3	3
I103AR		Function status auto-recloser for IEC60870-5-103	1	1
I103EF		Function status earth-fault for IEC60870-5-103	1	1
I103FLTPROT		Function status fault protection for IEC60870-5-103	1	1
I103IED		IED status for IEC60870-5-103	1	1
I103SUPERV		Supervison status for IEC60870-5-103	1	1
I103USRDEF		Status for user defined signals for IEC60870-5-103	20	20
Metering				
PCGGIO		Pulse counter logic	16	16
ETPMMTR		Function for energy calculation and demand handling	3	3

2.2.4 Communication

IEC 61850/Function block name	ANSI	Function description	Busbar	
			REB650	REB650 (A03) HiZ/3Ph
Station communication				
IEC61850-8-1		IEC 61850 communication protocol	1	1
DNPGEN		DNP3.0 for TCP/IP communication protocol	1	1
RS485DNP		DNP3.0 for EIA-485 communication protocol	1	1
CH1TCP		DNP3.0 for TCP/IP communication protocol	1	1
CH2TCP		DNP3.0 for TCP/IP communication protocol	1	1
CH3TCP		DNP3.0 for TCP/IP communication protocol	1	1
CH4TCP		DNP3.0 for TCP/IP communication protocol	1	1
OPTICALDNP		DNP3.0 for optical serial communication	1	1
MSTSERIAL		DNP3.0 for serial communication protocol	1	1
MST1TCP		DNP3.0 for TCP/IP communication protocol	1	1
MST2TCP		DNP3.0 for TCP/IP communication protocol	1	1
MST3TCP		DNP3.0 for TCP/IP communication protocol	1	1
MST4TCP		DNP3.0 for TCP/IP communication protocol	1	1
RS485GEN		RS485	1	1
OPTICALPROT		Operation selection for optical serial	1	1
RS485PROT		Operation selection for RS485	1	1
DNPFREC		DNP3.0 fault records for TCP/IP communication protocol	1	1
OPTICAL103		IEC60870-5-103 Optical serial communication	1	1
RS485103		IEC60870-5-103 serial communication for RS485	1	1
GOOSEINTLKRCV		Horizontal communication via GOOSE for interlocking	59	59
GOOSEBINRCV		GOOSE binary receive	4	4
ETHFRNT ETHLAN1 GATEWAY		Ethernet configuration of front port, LAN1 port and gateway	1	1
GOOSEDPRCV		GOOSE function block to receive a double point value	32	32
GOOSEINTRCV		GOOSE function block to receive an integer value	32	32
GOOSEMVRCV		GOOSE function block to receive a measurand value	16	16
GOOSESPRCV		GOOSE function block to receive a single point value	64	64

2.2.5 Basic IED functions

IEC 61850/Function block name	Function description	
Basic functions included in all products		
INTERRSIG	Self supervision with internal event list	1
SELFSUPEVLST	Self supervision with internal event list	1
TIMESYNCHGEN	Time synchronization	1
SNTP	Time synchronization	1
DTSBEGIN, DTSEND, TIMEZONE	Time synchronization, daylight saving	1
IRIG-B	Time synchronization	1
SETGRPS	Setting group handling	1
ACTVGRP	Parameter setting groups	1
TESTMODE	Test mode functionality	1
CHNGLCK	Change lock function	1
TERMINALID	IED identifiers	1
PRODINF	Product information	1
SYSTEMTIME	System time	1
RUNTIME	IED Runtime comp	1
PRIMVAL	Primary system values	1
SMAI_20_1 - SMAI_20_12	Signal matrix for analog inputs	2
3PHSUM	Summation block 3 phase	12
GBASVAL	Global base values for settings	6
ATHSTAT	Authority status	1
ATHCHCK	Authority check	1
SPACOMMMAP	SPA communication mapping	1
FTPACCS	FTP access with password	1
DOSFRNT	Denial of service, frame rate control for front port	1
DOSLAN1	Denial of service, frame rate control for LAN1	1
DOSSCKT	Denial of service, socket flow control	1
SAFEFILECOPY	Safe file copy function	1
SPATD	Date and time via SPA protocol	1
BCSCONF	Basic communication system	1

2.3 REB650 application examples

2.3.1 Adaptation to different applications

REB650 is an IED with pre-defined configuration to be used for busbar protection. It is possible to use the IED in a wide range of applications (sub-station configurations). This is done by means of selecting a functionality from the comprehensive function library in the IED.

A selection of applications is described below.

- Application 1: Protection of a two section busbar with additional Bus Coupler protection functions
- Application 2: Protection of a single section busbar

Other variants are also possible but the applications described here can be adapted to changed conditions.

In the applications a pre-configured variant of REB650 is used:

- REB650 (A03): High impedance differential protection IED with additional protection functions

The configuration enables the use for different applications by enable/disable protection functions to achieve a suitable functionality.

2.3.2 Protection of a two section busbar with additional bus coupler protection functions

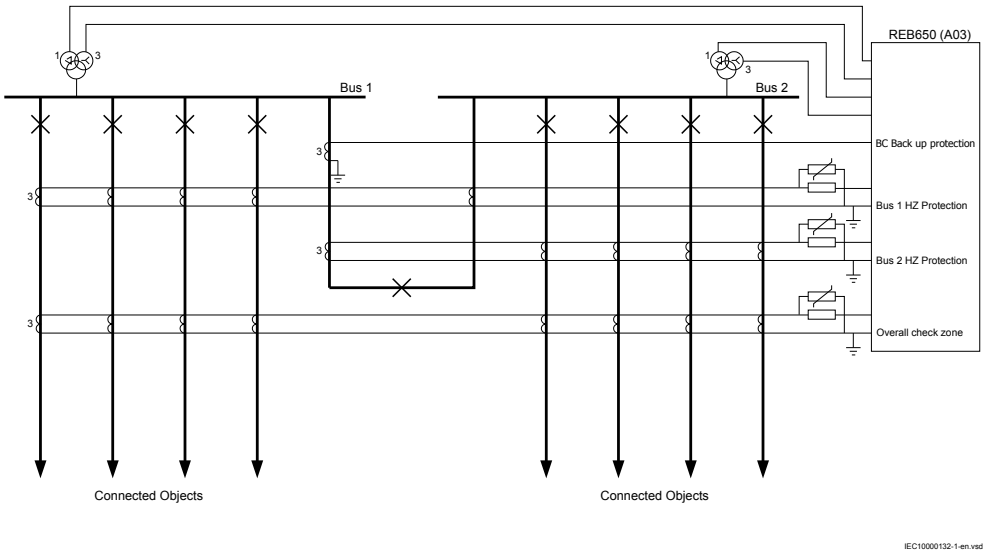

Figure 3: Two-section busbar in a High Voltage (HV) system

REB650 (A03) is used as the main protection for the busbar. Each busbar section has its own protection zone. In addition, there is a check zone covering both busbar sections.

Table 1: Data for the busbar protection application example

Parameter	Value
System voltage	20 - 110 kV
Power transfer though the busbar	5 – 150 MVA
Short circuit power level	500 – 10000 MVA

2.3.3 Protection of a single section busbar

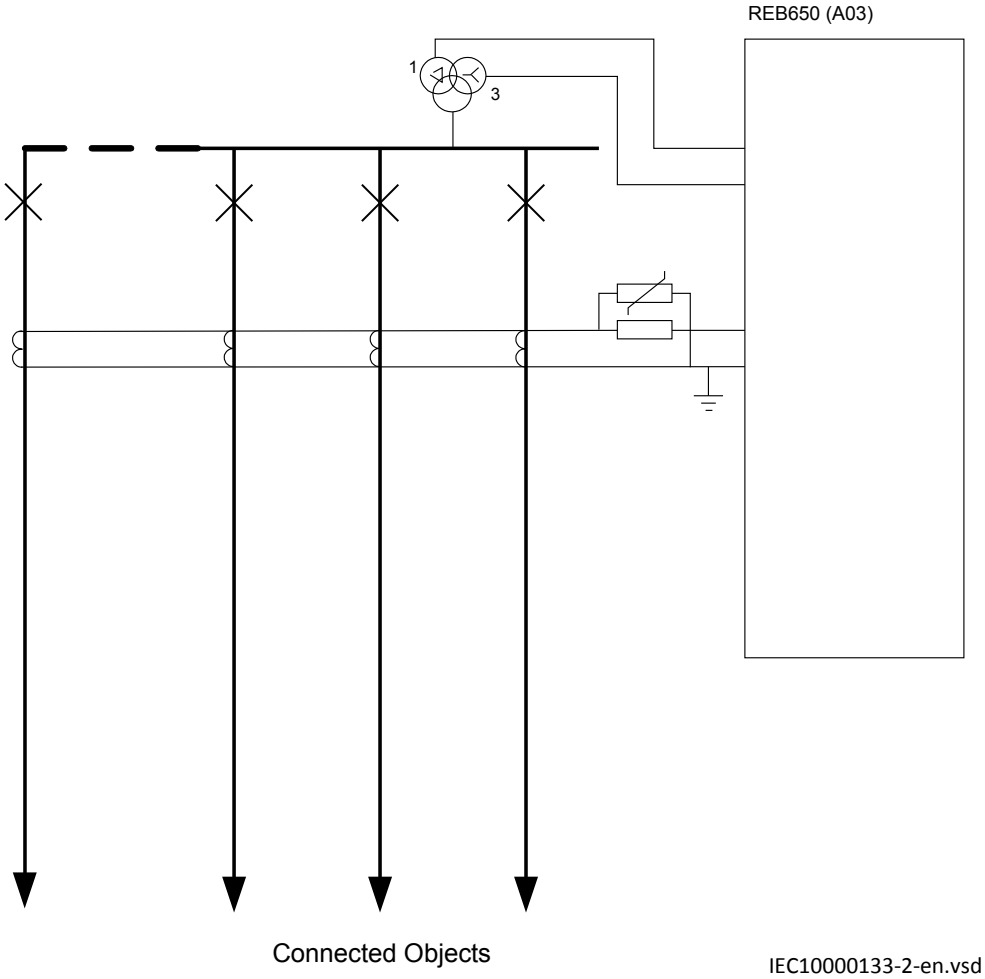

Figure 4: Single-section busbar in a High Voltage (HV) system

2.3.4 Functionality table

The proposal for functionality choice for the different application cases are shown in table 2.

The recommendations have the following meaning:

- On: It is recommended to have the function activated in the application.
- Off: It is recommended to have the function deactivated in the application.
- Application dependent: The decision to have the function activated or not is dependent on the specific conditions in each case.

Application 1 and 2 in table 2 are according to application examples given in previous sections.

Table 2: Selection of functions in different applications

Function	Application 1	Application 2
High impedance differential protection HZPDIF, instances 1 – 3 (Zone 1, L1, L2, L3)	On	On
High impedance differential protection HZPDIF, instances 4 – 6 (Zone 2, L1, L2, L3)	On	Off
High impedance differential protection HZPDIF, instances 7 – 9 (Zone 3, L1, L2, L3)	On Check Zone	Off
Four step phase overcurrent protection OC4PTOC	On	Off
Four step residual overcurrent protection EF4PTOC	On	Off
Breaker failure protection CCRBRF	On	Off
Pole discordance protection CCRPLD	On	Off
Negative sequence based overcurrent protection DNSPTOC	On	Off
Two step undervoltage protection UV2PTUV U< 1 (busbar section 1)	On	On
Two step undervoltage protection UV2PTUV U< 2 (busbar section 2)	On	Off
Two step overvoltage protection OV2PTOV U> 1 (busbar section 1)	On	On
Two step overvoltage protection OV2PTOV U> 2 (busbar section 2)	On	Off
Two step residual overvoltage protection ROV2PTOV U0>, 1 (busbar section 1)	On	On
Two step residual overvoltage protection ROV2PTOV U0>, 2 (busbar section 2)	On	Off

Section 3 REB650 setting examples

3.1 Busbar protection application

The application example has a 145 kV switchyard with two busbar sections protected by one REB650 A03 as shown in figure5.

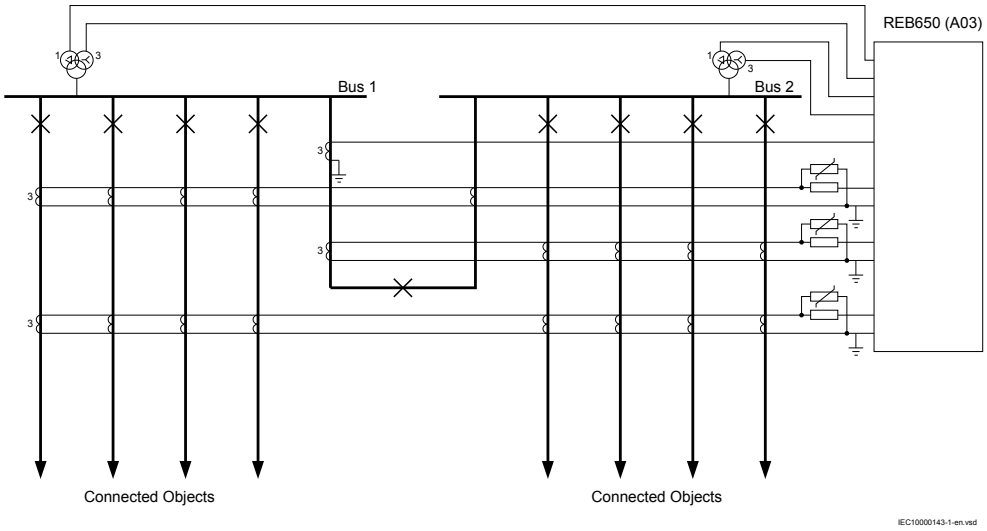

Figure 5: Busbar protection application

The following data is assumed:

Table 3: Typical data for the busbar

Item	Data
System voltage U	145 kV
Maximum transferred power over the switchyard	151 MVA
Maximum three-phase short circuit current in the switchyard	15 kA
Maximum three-phase short circuit current through a bay at external fault	15 kA
CT ratio at all bays	600/1 A
CT rated burden S_N	25 VA This value corresponds to the rated resistance of the burden at the secondary side of the CT: R_b = 25 Ω.
Table continues on next page	

Item	Data
CT rated symmetrical short-circuit current factor K_{ssc}	20
CT secondary winding resistance R_{ct} at 75^0C	5 Ω The rated equivalent secondary e.m.f. E_{al} can now be calculated: $E_{al} = I_{NS} \cdot K_{ssc} \cdot (R_{ct} + R_b) = 1 \cdot 20 \cdot (5 + 25) = 600\ V$
145 kV VT ratio	$\frac{145}{\sqrt{3}} / \frac{0.11}{\sqrt{3}} / \frac{0.11}{\sqrt{3}} kV$

The high impedance differential protection needs dedicated CTs which have identical turns ratio and similar magnetizing characteristics. Class TPS CTs, according to IEC 60044-6, and class PX CTs, according to IEC 60044-1, are usually selected for this application. The class TPS CTs are used in the following example.

Table 4: CT secondary wiring data

Item	Data
Secondary CT conductor cross section area	2.5 mm^2
Maximum length between bay and protection	150 m This gives the maximum secondary conductor resistance: $R_{sec} = \rho(\Omega mm^2 / m) \cdot \frac{l(m)}{A(mm^2)}$ rCU = 0,0172 (Ohm.mm^2/m) at 20° C rCU = 0,021 (Ohm.mm^2/m) at 75° C R_{sec} = 0,021 * 150 / 2,5 = 1,26 Ohm

Only settings that need adjustment due to the specific application are described in setting examples. It is recommended to keep the default values for all settings that are not described. Refer to Technical manual for setting tables for each protection and control function.

For the functions not explained in the setting examples section, refer to the Setting guidelines section of the corresponding function.

Use parameter setting tool in PCM600 to set the IED according to calculations for the particular application.

The following protection functions are used:

- High impedance differential protection (HZPDIF) with separate zones for busbar section 1 and busbar section 2.
- High impedance busbar protection zone 3 is used as checkzone for zone 1 and 2.
- Four step phase overcurrent protection, 3-phase output / Instantaneous phase overcurrent protection, phase segregated output (OC4PTOC/SPTPIOC) in the bus coupler bay
- Residual overcurrent protection (EF4PTOC) in the bus coupler bay
- Breaker failure protection, 3-phase activation and output (CCRBRF) in the bus coupler bay
- Pole discordance protection (CCRPLD) in the bus coupler bay
- Negative sequence overcurrent protection (DNSPTOC) in the bus coupler bay
- Undervoltage protections (UV2PTUV) connected to busbar section 1 and 2
- Overvoltage protections (OV2PTOV)connected to busbar section 1 and 2
- Residual voltage protections connected to busbar section 1 and 2

3.1.1 Calculating general settings for analogue TRM inputs 6I 4U

The transformer module (TRM) has the capability of 6 current inputs (tapped to 1 or 5 A) and 4 voltage inputs.

The high impedance differential protection (HZPDIF) zone 1 external differential circuits are connected to inputs 1 – 3 (L1, L2 and L3).

The high impedance differential protection zone 3 external differential circuits are connected to inputs 4 – 6 (L1, L2 and L3).

The 145 kV busbar section 2 phase VT is connected to inputs 7 - 9 (L1, L2 and L3).

The 145 kV busbar section 2 open delta connected VT is connected to input 10.

1. Set the current transformer inputs.
   1.1. Set *CTStarPoint1* to *To Object*. This setting has no effect on the performance of the protection function.
   1.2. Set *CTSec1* to *1 A*.
   1.3. Set *CTPrim1* to *1 A* .
   1.4. Set the same values for current inputs 2 and 3.
   1.5. Set *CTStarPoint4* to *To Object* . This setting has no effect on the performance of the protection function.
   1.6. Set *CTSec4* to *1 A*
   1.7. Set *CTPrim4* to *1 A*
   1.8. Set the same values for current inputs 5 and 6.
2. Set the voltage transformer inputs.
   2.1. Set *VTSec7* to *110 V*.

(The rated secondary voltage of the VT, given as phase-to-phase voltage)

2.2. Set *VTPrim7* to *145 kV* .
(The rated secondary voltage of the VT, given as phase-to-phase voltage)

2.3. Set the same values for voltage inputs 8 and 9.

3. Set *VTSec10* to *110 V*.
(The rated secondary voltage of the VT)

4. Set *VTPrim10* to *145 kV*.
The equivalent ratio is therefore:

$$\frac{145}{0.11} = \frac{143}{\sqrt{3}} / \frac{0.11}{\sqrt{3}} kV$$

3.1.2 Calculating general settings for analogue AIM inputs 6I 4U

The analogue input module (AIM) has the capability of 6 current inputs (tapped to 1 or 5 A) and 4 voltage inputs.

The high impedance differential protection (HZPDIF) zone 2 external differential circuits are connected to inputs 1 – 3 (L1, L2 and L3).

The bus coupler phase CTs (three-phase current transformer group) are connected to inputs 4 – 6 (L1, L2 and L3).

The 145 kV busbar section 1 phase VT is connected to inputs 7 - 9 (L1, L2 and L3).

The 145 kV busbar section 1 open delta-connected VT is connected to input 10.

1. Set the current transformer inputs.

1.1. Set *CTStarPoint1* to *To Object*. This setting has no effect on the performance of the protection function.

1.2. Set *CTSec1* to *1 A*.

1.3. Set *CTPrim1* to *1 A* .

1.4. Set the same values for current inputs 2 and 3.

1.5. Set *CTStarPoint4* to *To Object*.
The CT secondary is earthed towards the bus coupler.

1.6. Set *CTSec4* to *1 A*.
(The rated secondary current of the CT)

1.7. Set *CTPrim4* to *600 A*.
(The rated primary current of the CT)

2. Set the voltage transformer inputs.

2.1. Set *VTSec7* to *110 V*
(The rated secondary voltage of the VT, given as phase-to-phase voltage)

2.2. Set *VTPrim7* to *145 kV* .

(The rated secondary voltage of the VT, given as phase-to-phase voltage)

2.3. Set the same values for voltage inputs 8 and 9.

3. Set *VTSec10* to *110 V*.
(The rated secondary voltage of the VT)
4. Set *VTPrim10* to *145 kV* .
This gives equivalent of ratio

$$\frac{145}{0.11} = \frac{143}{\sqrt{3}} / \frac{0.11}{\sqrt{3}} kV$$

3.1.3 Preprocessing blocks (SMAI)

It is possible to use frequency adapted fourier filtering in the preprocessing blocks. In this application, the frequency is close to nominal. Therefore, *InternalDftRef* is used.

3.1.4 Calculating settings for global base values for setting function GBSVAL

Each function uses primary base values for reference of settings. The base values are defined in Global base values for settings function. It is possible to include six Global base values for settings GBASVAL functions: Global base 1 – Global base 6. In this application only GBASVAL instance 1 is used to define the base for 145 kV inputs covering the bus coupler related protections and the busbar voltage based protections. The high impedance differential protection does not require global base.

For busbar protection, set the parameters of the Global base values equal to the system primary rated values:

1. Set *IBase* to *600 A*.
2. Set *UBase* to *145 kV*.
3. Set *SBase* to *151 MVA*.

3.1.5 Calculating settings for busbar high impedance differential protection HZPDIF

In this application, there is one busbar protection covering busbar section 1 (zone 1) and one busbar protection covering busbar section 2 (zone 2). A third zone (zone 3) is connected to cover the total switchyard (sections 1 and 2). This zone is used as a check zone that will release a trip from either zone 1 or 2. The substation layout is shown in figure 5. The settings are identical for both zones.

Figure 6 shows the connections of the CTs of one phase of each feeder and the buscoupler of busbar 1 to the high impedance differential protection.

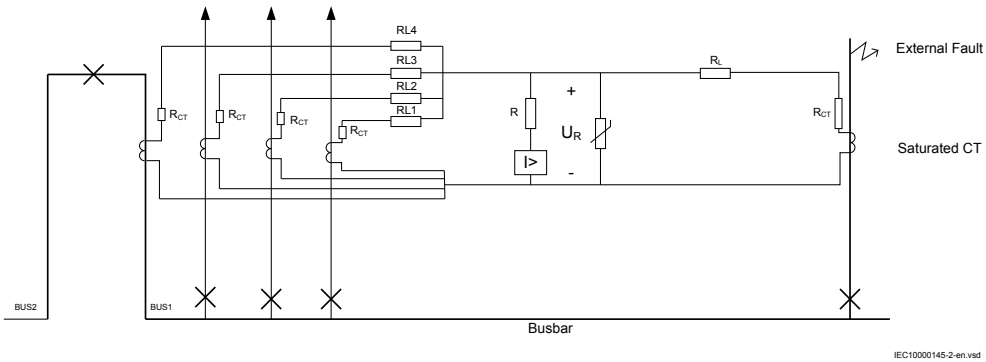

Figure 6: Connection of the high impedance differential protection and external fault

The differential circuit has high impedance given by the stabilizing resistance R. This resistance is adjustable with a maximum value of 6.8 kΩ. In balanced conditions, normal load or external faults, the voltage U_R is very small. In case of an internal fault, the unbalanced current tries to flow through the high impedance differential circuit R resulting in a high voltage. This will bring the CTs into saturation but before that, the overcurrent detection will operate and release a trip.

If there is an external fault and CT saturation, as shown in figure 6, there will be a voltage over the differential detection. The operation level of the detection must be set higher than this voltage. The highest wiring resistance shall be considered in the calculation: $R_L = \max(R_L, R_{L1}, R_{L2}, R_{L3}, R_{L4})$. The maximum of U_R can now be calculated: $U_{R\max} = I_{SC} \cdot (R_{ct} + 2 \cdot R_L)$

I_{SC} is the maximum short circuit current that can flow through one of the bays in case of an external fault.

With the given data, the following value can be calculated:

$$U_{R\max} = 15000 \cdot \frac{1}{600} \cdot (5 + 2 \cdot 1.26) = 188\,V$$

To assure trip in case of an internal fault, it is recommended that the voltage E_{al} (600 V as indicated above) is at least twice the set voltage level. In this case, the operation value 200 V is recommended.

1. Set *Operation* to *On* to activate the function.
2. Adjust the series resistor to a value where the trip level and alarm level is within the setting range, 20 mA – 1 A.
   It is recommended to use a series resistor adjusted to 1500 Ω, where the corresponding trip voltage 200 V gives 133 mA.
3. Set *SeriesResistor* to the physical value of the resistor, *1500 Ω*.

The thermal capacity of the resistor is limited to 200 W. The trip value gives

$$P_{loss} = \frac{200^2}{1500} = 27\,W$$

4. Set *U>Trip* to *200 V*
   The sensitivity (in primary current) at the operating voltage U>Trip is:

$$IP = n.(IR + I_{res} + sum(\mathrm{I}_{mag}))$$

(Equation 1)

where:

n	CT ratio
IR	133 mA: current which is drawn by the IED circuit at the operating voltage;
I_{res}	20 mA: current which is drawn by the non-linear resistor at the operating voltage
I_{mag}	35 mA: magnetizing current of the CT at the operating voltage; we suppose that the phase angle is -60^0
IP	600/1 * (0,133 /_0° + 0,02 /_0° + 5* 0,035 /_-60°) = 144 A

   i.e. a sensitivity of 24%.
5. Set *U>Alarm*
   This setting is related to the detection of an open CT. If the secondary wiring of the CT of one bay is open, then there is an unbalance condition. The minimum unbalance current which the protection function can detect is 20 mA, if the rated secondary current of the CT is 1 A.
   The voltage UR_unbwhich is related to IR_unb = 20 mA is:
   UR_unb = R . IR_unb = 1500 . 0,02 = 30 V
   So:
   U>Alarm = UR_unb = 30 V
   V>Alarm = VR_unb = 30 V
   We suppose that the magnetizing current of the CT at UR_unb is 6 mA, with an angle -60°; the current that is drawn by the non-linear resistor at UR_unb is about 1 mA. So the sensitivity in primary current is:
   IP = 600/1 * (0,02 /_0° + 0,001 /_0° + 5* 0,006 /_-60°) = 22 A
   The sensitivity should allow the detection of the open CT on the smallest object in normal load condition.
6. Set *tAlarm* to *15 s*

3.1.6 Calculating settings for breaker failure protection 3-phase activation and output CCRBRF

The breaker failure protection, 3-phase activation and output can use either contact function in the circuit breaker or current measurement to detect the correct breaker function. For line protections, the most suitable function is to use current measurement breaker check.

1. Set *GlobalBaseSel* to *1*
   The settings are made in primary values. These values are given in the base settings in Global base 1.
2. Set *Function mode* to *Current*
3. Set *BuTripMode* to *1 out of 4*
   In the current measurement the three-phase current out on the line is used. It is also possible to measure the residual current (analogue input 4). The logic to detect failure of the circuit breaker can be chosen:
   1 out of 3: at least one of the three-phase current shall be larger than the set level to detect failure to break.
   1 out of 4: at least one of the three-phase current and the residual current shall be larger than the set level to detect failure to break.
   2 out of 4: at least two of the three-phase current and the residual current shall be larger than the set level to detect failure to break.
   The residual current protection is one of the protection functions to initiate the breaker failure protection. Thus, the setting *1 out of 4* is chosen.
4. Set *IP>* to *10 %* of the base current.
   The fault current through the buscoupler depends on the particular configuration of the substation after the trip of the busbar protection and opening of the circuit breakers of the relevant feeders. Hence, the setting of the breaker failure protection is very sensitive.
5. Set *IN>* to *10 %* of the base current.
   The fault current through the buscoupler depends on the particular configuration of the substation after the trip of the busbar protection and opening of the circuit breakers of the relevant feeders. So the setting of the breaker failure protection shall be very sensitive.
6. Set the re-trip time delay *t1* to *0* (The re-trip output TRRET is not used).
7. Set *t2* to *0.17 s*
   The delay time of the breaker failure protection (BuTrip) is chosen according to figure 7.
   - The maximum open time of the circuit breaker is considered to be 100 ms.
   - The CCRPRF reset time is 10 ms max.
   - The margin should be chosen to about 2 cycles. This gives about 150 ms minimum setting of backup trip delay *t2*.

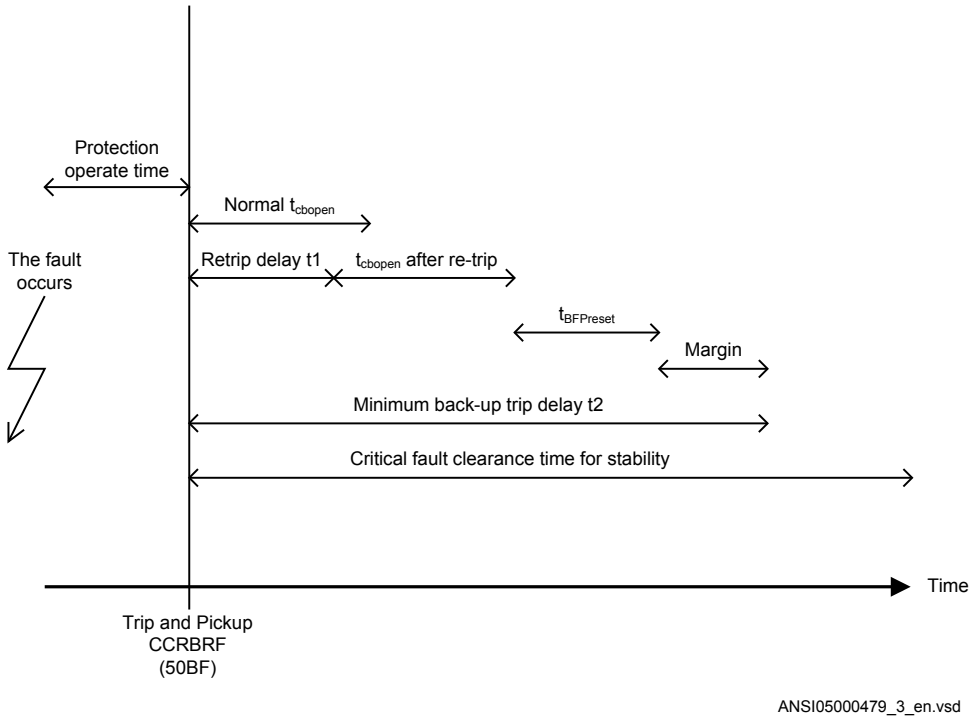

Figure 7: Time sequences for breaker failure protection setting

3.1.7 Calculating settings for pole discordance protection CCRPLD

Pole discordance protection (CCRPLD) detects situations where the bus coupler breaker has different switching states in the phases (one open and two closed or two open and one closed). Pole discordance can be detected either from auxiliary breaker contract status or by current measurement.

1. Set *GlobalBaseSel* to *1*
   The settings are made in primary values. These values are given in the base settings in Global base 1.
2. Set *Operation* to *On*
3. Set *tTrip* to *3 s*.
   When asymmetry is detected, a trip signal is activated. The delay must be so long that asymmetrical faults will not cause an unwanted trip.
4. Set *ContSel* to *On* if the primary auxiliary contact circuits are connected.
5. Set *CurrSel* to *Continuous monitor*.
   The detection by means of current measurement can be constantly activated or activated in connection of breaker actions only.
6. Set *CurrRelLevel* to *10 %* of *IBase* .

The current detected shall be active if all phase currents are higher than the setting.

7. Set *CurrUnsymLevel* to *80%*.
   Pole discordance is detected if the magnitude of the lowest phase current is lower than the fraction *CurrUnsymLevel* (%) of the highest phase current.

Section 4 Analog inputs

4.1 Introduction

Analog input channels are already configured inside the IED. However the IED has to be set properly to get correct measurement results and correct protection operations. For power measuring and all directional and differential functions the directions of the input currents must be defined properly. Measuring and protection algorithms in the IED use primary system quantities. Setting values are in primary quantities as well and it is important to set the transformation ratio of the connected current and voltage transformers properly.

The availability of CT and VT inputs, as well as setting parameters depends on the ordered IED.

A reference *PhaseAngleRef* must be defined to facilitate service values reading. This analog channels phase angle will always be fixed to zero degrees and all other angle information will be shown in relation to this analog input. During testing and commissioning of the IED the reference channel can be changed to facilitate testing and service values reading.

4.2 Setting guidelines

4.2.1 Setting of the phase reference channel

All phase angles are calculated in relation to a defined reference. An appropriate analog input channel is selected and used as phase reference. The parameter *PhaseAngleRef* defines the analog channel that is used as phase angle reference.

The initially connected phase-to-earth voltage is usually chosen as *PhaseAngleRef*. A phase-to-phase voltage can also be used in theory, but a 30 degree phase shift between the current and voltage is observed in this case.

If no suitable voltage is available, the initially connected current channel can be used. Although the phase angle difference between the different phases will be firm, the whole system will appear to rotate when observing the measurement functions.

The phase reference does not work if the current channel is not available. For example, when the circuit breaker is opened and no

current flows. Although the phase angle difference between the different phases is firm, the whole system appears to be rotating when the measurement functions are observed.

4.2.2 Setting of current channels

The direction of a current depends on the connection of the CT. Unless indicated otherwise, the main CTs are supposed to be star connected. The IED can be connected with its earthing point towards the object or away from the object. This information must be set in the IED via the parameter *CTStarPoint*, which can be changed between *FromObject* and *ToObject*. Internally in the IED algorithms and IED functions, the convention of the directionality is defined as follows:

A positive value of current, power, and so on (forward) means that the quantity has a direction towards the object. - A negative value of current, power, and so on (reverse) means a direction away from the object. See figure 8.

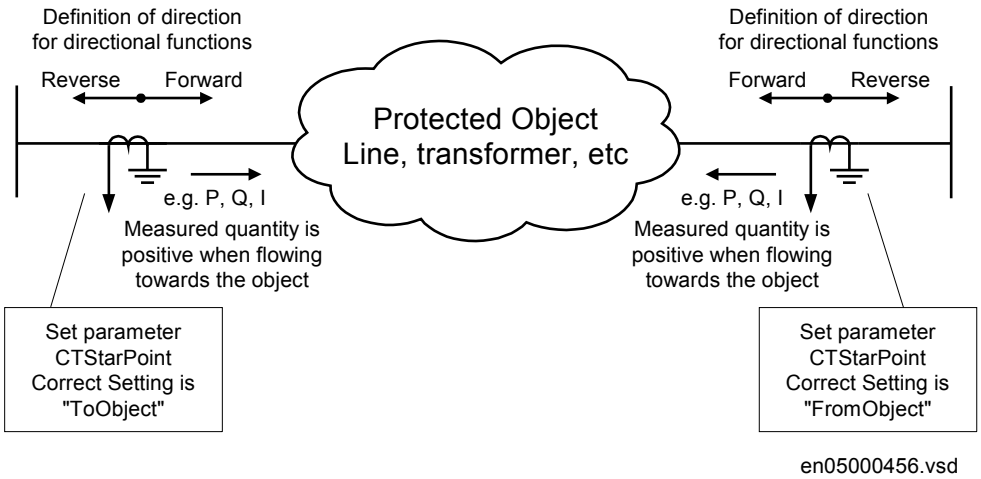

Figure 8: Internal convention of the directionality in the IED

With correct setting of the primary CT direction, *CTStarPoint* set to *FromObject* or *ToObject*, a positive quantity always flows towards the protected object and a direction defined as Forward is always looking towards the protected object. The following examples show the principle.

4.2.2.1 Example 1

Two IEDs used for protection of two objects.

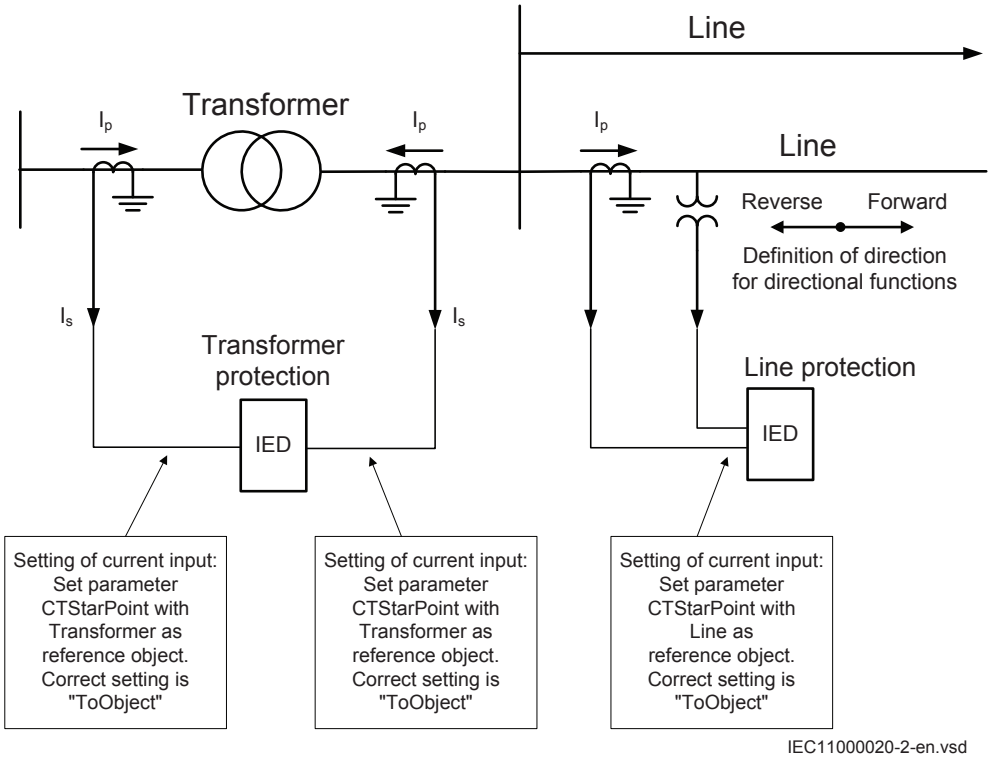

Figure 9: Example how to set CTStarPoint parameters in the IED

The figure 9 shows the most common case where the objects have their own CTs. For the transformer protection, the protected object is the transformer. Therefore both *CTStarPoint* directions should be set *ToObject*. For the line protection, the protected object is the line. The line CT is earthed towards the busbar, therefore the *CTStarPoint* should be set *FromObject*.

4.2.2.2 Example 2

Two IEDs used for protection of two objects and sharing a CT.

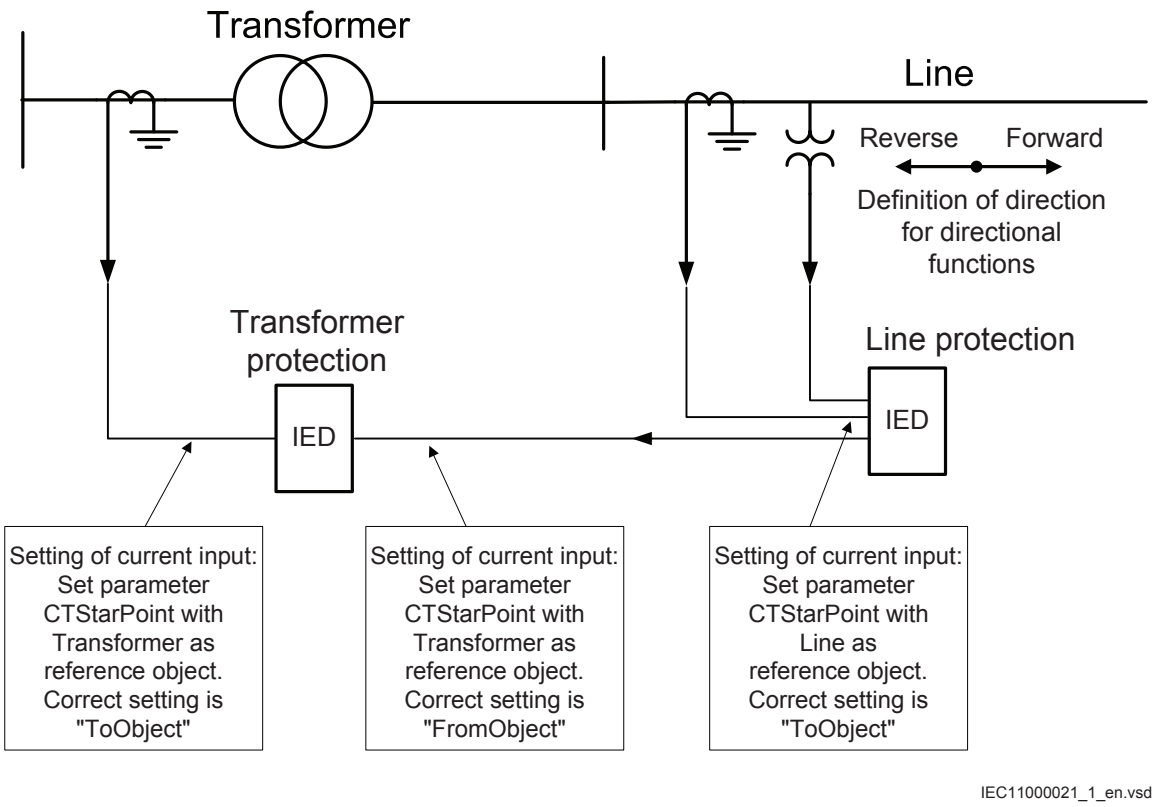

Figure 10: Example how to set CTStarPoint parameters in the IED

This example is similar to example 1, but the power transformer is feeding just one line; both line protection IED and transformer protection IED use the same CT. The CT direction is set with different reference objects for the two IEDs though it is the same current from the same CT that is feeding the two IEDs. With these settings the directional functions of the line protection shall be set to *Forward* to look towards the line.

4.2.2.3 Examples on how to connect, configure and set CT inputs for most commonly used CT connections

Figure 11 defines the marking of current transformer terminals commonly used around the world:

In the SMAI function block, you have to set if the SMAI block is measuring current or voltage. This is done with the parameter: *AnalogInputType*: Current/voltage. The *ConnectionType*: phase - phase/phase-earth and *GlobalBaseSel*.

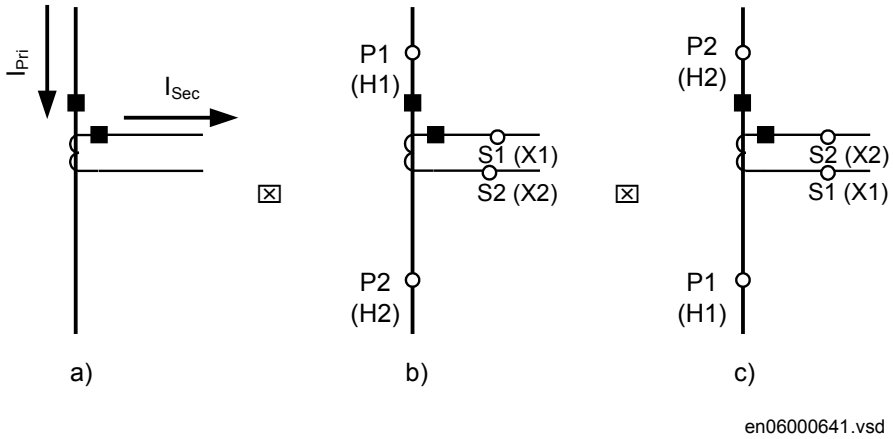

Figure 11: Commonly used markings of CT terminals

Where:

a) is symbol and terminal marking used in this document. Terminals marked with a dot indicates the primary and secondary winding terminals with the same (that is, positive) polarity

b) and c) are equivalent symbols and terminal marking used by IEC (ANSI) standard for CTs. Note that for these two cases the CT polarity marking is correct!

It shall be noted that depending on national standard and utility practices, the rated secondary current of a CT has typically one of the following values:

- 1A
- 5A

However in some cases the following rated secondary currents are used as well:

- 2A
- 10A

The IED fully supports all of these rated secondary values.

4.2.2.4 Example on how to connect a star connected three-phase CT set to the IED

Figure 12 gives an example about the wiring of a star connected three-phase CT set to the IED. It gives also an overview of the actions which are needed to make this measurement available to the built-in protection and control functions within the IED as well.

For correct terminal designations, see the connection diagrams valid for the delivered IED.

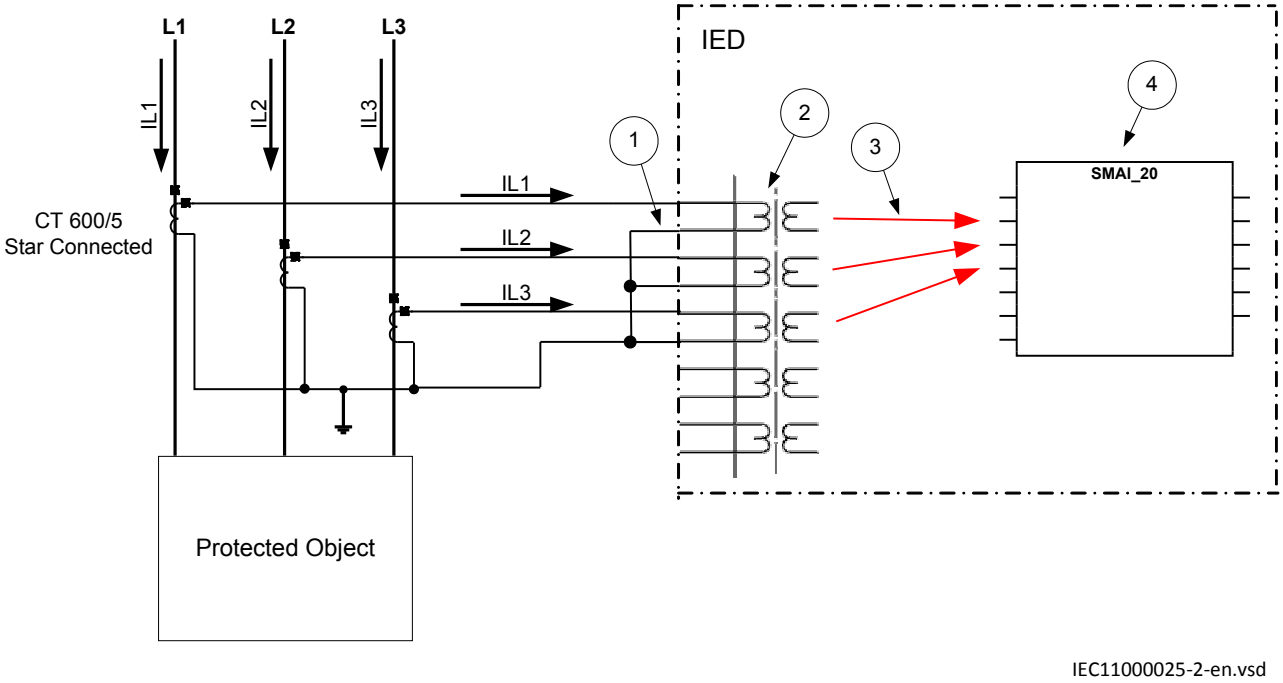

Figure 12: Star connected three-phase CT set with star point towards the protected object

Where:

1) The drawing shows how to connect three individual phase currents from a star connected three-phase CT set to the three CT inputs of the IED.

2) is the TRM or AIM where these current inputs are located. It shall be noted that for all these current inputs the following setting values shall be entered.

- CTprim=600A
- CTsec=5A
- CTStarPoint=ToObject

Inside the IED only the ratio of the first two parameters is used. The third parameter as set in this example will have no influence on the measured currents (that is, currents are already measured towards the protected object).

3) are three connections, which connects these three current inputs to three input channels of the preprocessing function block 4). Depending on the type of functions, which need this current information, more than one preprocessing block might be connected in parallel to the same three physical CT inputs.

4) is a Preprocessing block that has the task to digitally filter the connected analog inputs and calculate:

- fundamental frequency phasors for all four input channels
- harmonic content for all four input channels
- positive, negative and zero sequence quantities by using the fundamental frequency phasors for the first three input channels (channel one taken as reference for sequence quantities)

These calculated values are then available for all built-in protection and control functions within the IED, which are connected to this preprocessing function block. For this application most of the preprocessing settings can be left to the default values.
If frequency tracking and compensation is required (this feature is typically required only for IEDs installed in the generating stations), then the setting parameters DFTReference shall be set accordingly.

Another alternative is to have the star point of the three-phase CT set as shown in figure 13:

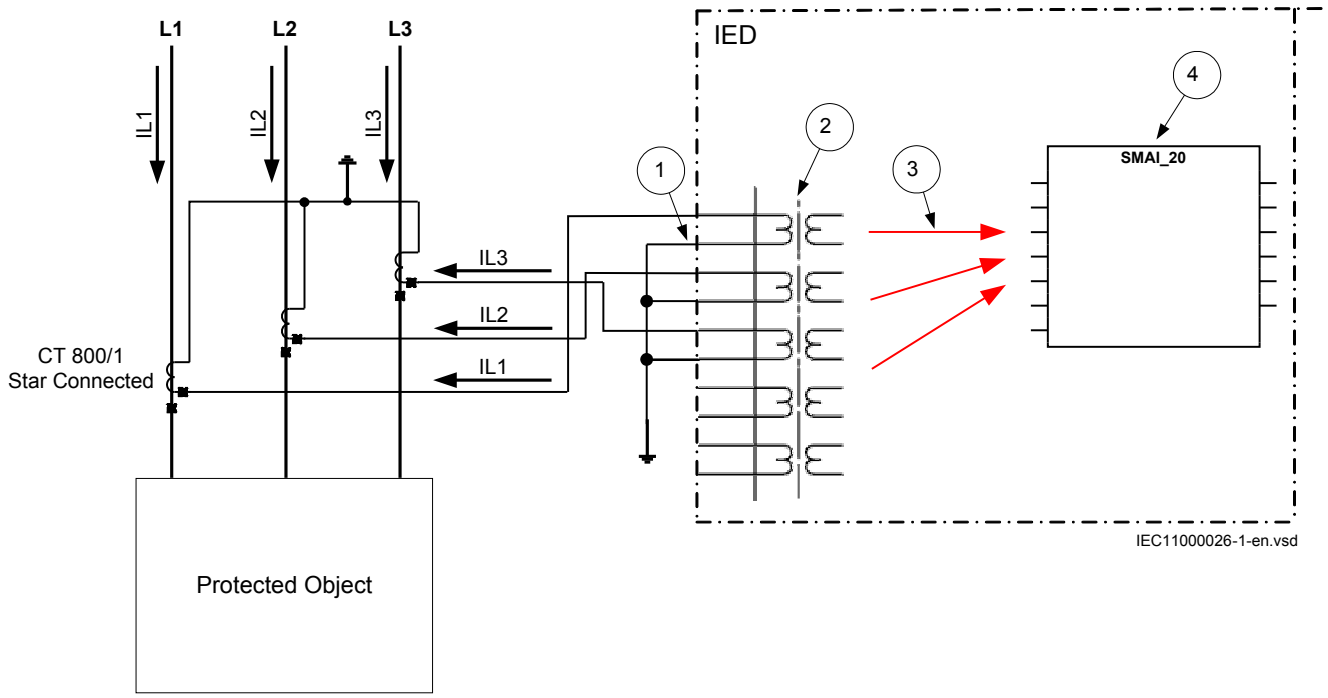

Figure 13: Star connected three-phase CT set with its star point away from the protected object

In this case everything is done in a similar way as in the above described example, except that for all used current inputs on the TRM the following setting parameters shall be entered as shown in the example figure 13:

- *CTprim*=600A
- *CTsec*=5A
- *CTStarPoint*=FromObject

Inside the IED only the ratio of the first two parameters is used. The third parameter as set in this example will negate the measured currents in order to ensure that the currents are measured towards the protected object within the IED.

4.2.3 Setting of voltage channels

As the IED uses primary system quantities the main VT ratios must be known to the IED. This is done by setting the two parameters *VTsec* and *VTprim* for each voltage channel. The phase-to-phase value can be used even if each channel is connected to a phase-to-earth voltage from the VT.

4.2.3.1 Example

Consider a VT with the following data:

$$\frac{132kV}{\sqrt{3}} \Big/ \frac{110V}{\sqrt{3}}$$

(Equation 2)

The following setting should be used: *VTprim=132* (value in kV) *VTsec=110* (value in V)

4.2.3.2 Examples how to connect, configure and set VT inputs for most commonly used VT connections

Figure 14 defines the marking of voltage transformer terminals commonly used around the world.

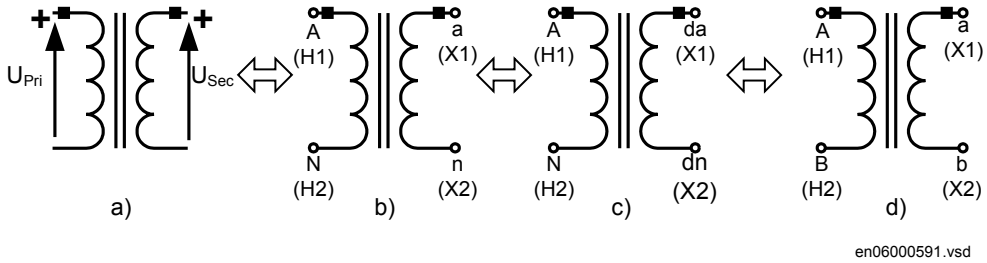

Figure 14: Commonly used markings of VT terminals

Where:

a) is the symbol and terminal marking used in this document. Terminals marked with a dot indicate the primary and secondary winding terminals with the same (positive) polarity

b) is the equivalent symbol and terminal marking used by IEC (ANSI) standard for phase-to-earth connected VTs

c) is the equivalent symbol and terminal marking used by IEC (ANSI) standard for open delta connected VTs

d) is the equivalent symbol and terminal marking used by IEC (ANSI) standard for phase-to-phase connected VTs

It shall be noted that depending on national standard and utility practices the rated secondary voltage of a VT has typically one of the following values:

- 100 V
- 110 V
- 115 V
- 120 V
- 230 V

The IED fully supports all of these values and most of them will be shown in the following examples.

4.2.3.3 Examples on how to connect a three phase-to-earth connected VT to the IED

Figure 15 gives an example about the wiring of a a three phase-to-earth connected VT to the IED. It gives aslo an overview of required actions which are needed to make this measurement available to the built-in protection and control functions within the IED.

For correct terminal designations, see the connection diagrams valid for the delivered IED.

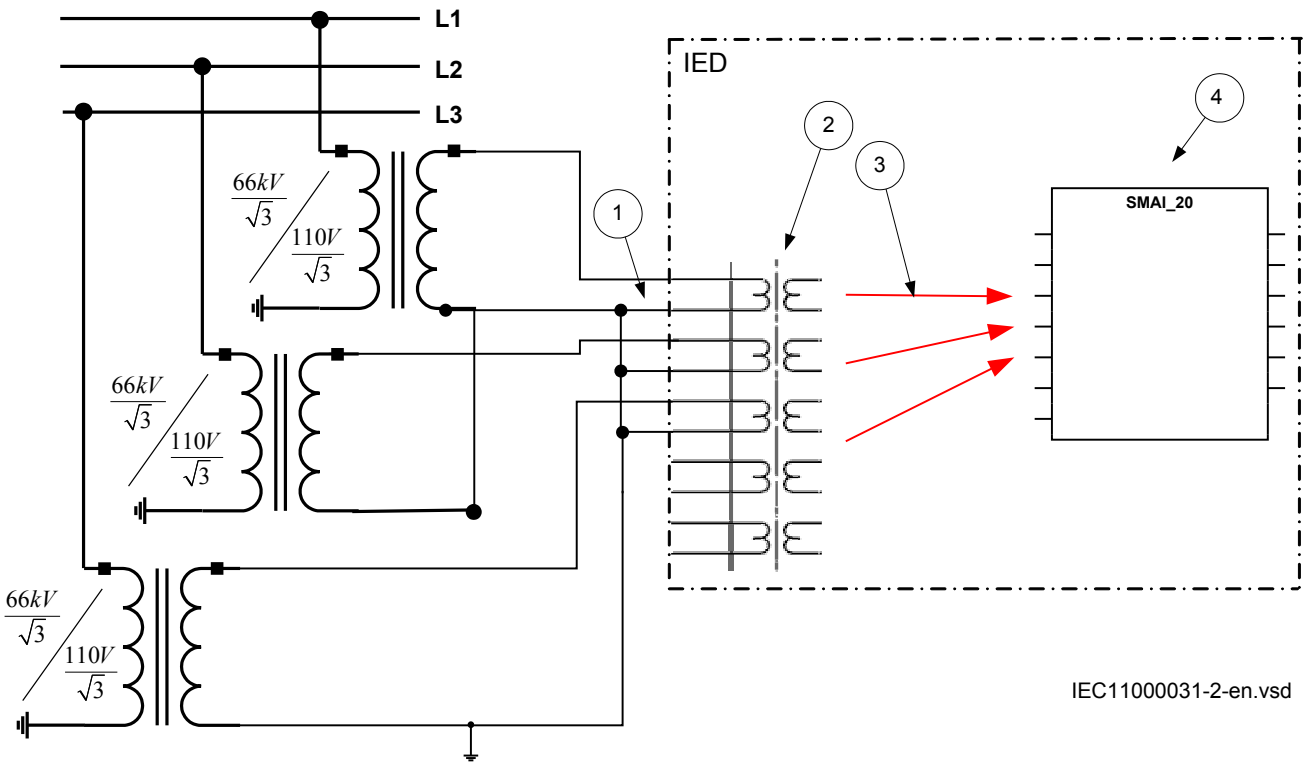

Figure 15: A Three phase-to-earth connected VT

Where:

1) shows how to connect three secondary phase-to-earth voltages to three VT inputs on the IED

2) is the TRM or AIM where these three voltage inputs are located. For these three voltage inputs, the following setting values shall be entered:
VTprim = 66 kV
VTsec = 110 V
The ratio of the entered values exactly corresponds to the ratio of one individual VT.

$$\frac{66}{110} = \frac{66/\sqrt{3}}{110/\sqrt{3}}$$

(Equation 3)

3) are three connections made in Signal Matrix Tool (SMT), which connect these three voltage inputs to first three input channels of the preprocessing function block 4). Depending on the type of functions which need this voltage information, more then one preprocessing block might be connected in parallel to these three VT inputs.

4) is a Preprocessing block that has the task to digitally filter the connected analog inputs and calculate:

- fundamental frequency phasors for all four input channels
- harmonic content for all four input channels
- positive, negative and zero sequence quantities by using the fundamental frequency phasors for the first three input channels (channel one taken as reference for sequence quantities)

These calculated values are then available for all built-in protection and control functions within the IED, which are connected to this preprocessing function block in the configuration tool. For this application most of the preprocessing settings can be left to the default values.

4.2.3.4 Example how to connect the open delta VT to the IED for low impedance earthed or solidly earthed power systems

Figure 16 gives an example how to connect the open delta VT to the IED for low impedance earthed or solidly earthed power systems. It shall be noted that this type of VT connection presents secondary voltage proportional to $3U_0$ to the IED.

In case of a solid earth fault close to the VT location the primary value of 3Uo will be equal to:

$$3Uo = \frac{U_{Ph-Ph}}{\sqrt{3}} = U_{Ph-E}$$

(Equation 4)

The primary rated voltage of such VT is always equal to UPh-E Therefore, three series connected VT secondary windings will give the secondary voltage equal only to one individual VT secondary winding rating. Thus the secondary windings of such open delta VTs quite often has a secondary rated voltage close to rated phase-to-phase VT secondary voltage, that is, 115V or 115/√3V as in this particular

example. Figure 16 as well gives overview of required actions by the user in order to make this measurement available to the built-in protection and control functions within the IED.

For correct connections, see the connection diagrams valid for the delivered IED.

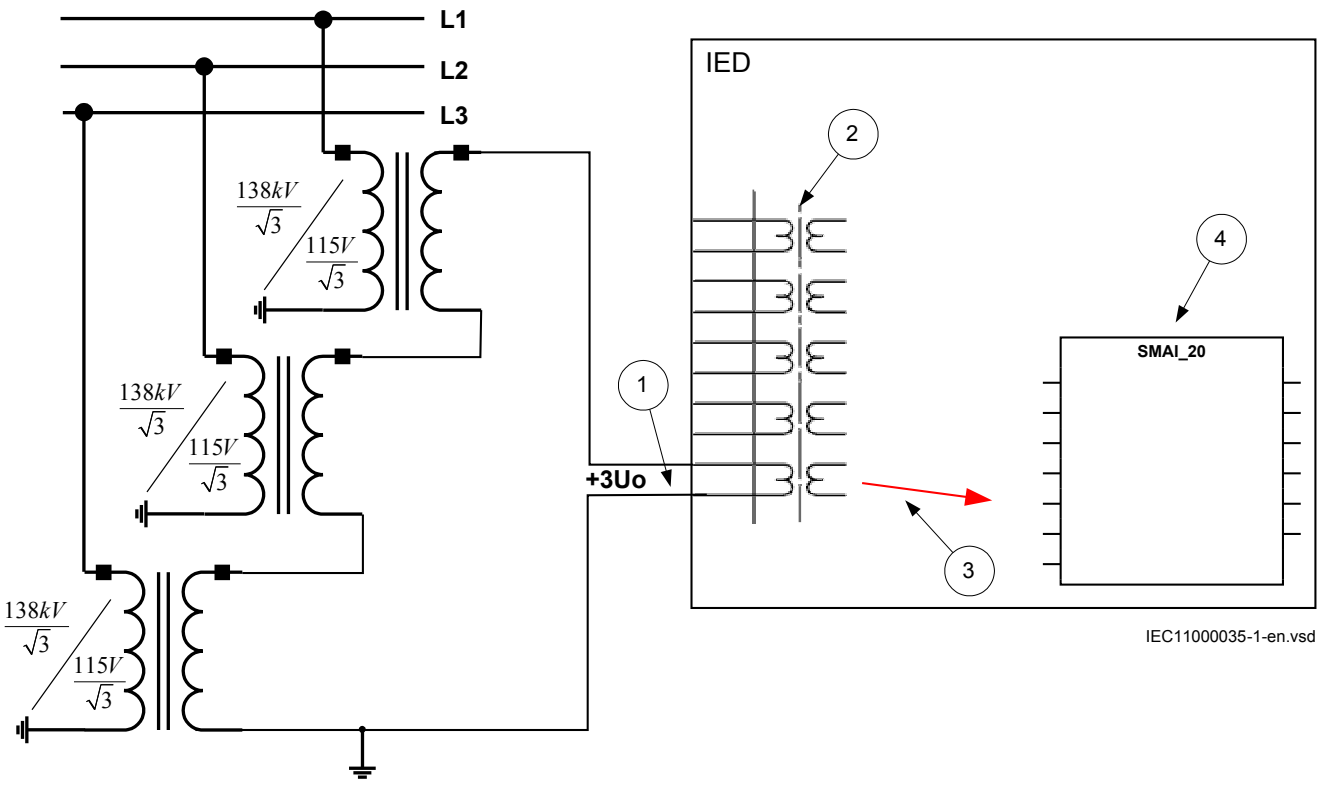

Figure 16: Open delta connected VT in low impedance or solidly earthed power system

Where:

1) shows how to connect the secondary side of open delta VT to one VT input in the IED.

+3Uo shall be connected to the IED.

2) is TRM or AIM where this voltage input is located. It shall be noted that for this voltage input the following setting values shall be entered:

$$VTprim = \sqrt{3} \cdot \frac{138}{\sqrt{3}} = 138kV$$

(Equation 5)

$$VT\sec = \sqrt{3} \cdot \frac{115}{\sqrt{3}} = 115V$$

(Equation 6)

Inside the IED, only the ratio of these two parameters is used. It shall be noted that the ratio of the entered values exactly corresponds to ratio of one individual open delta VT.

$$\frac{138}{115} = \frac{138/\sqrt{3}}{115/\sqrt{3}}$$

(Equation 7)

3) shows the connection, which connect this voltage input to the input channel of the preprocessing function block 4).

4) preprocessing block has a task to digitally filter the connected analog inputs and calculate:

- fundamental frequency phasors for all four input channels
- harmonic content for all four input channels
- positive, negative and zero sequence quantities by using the fundamental frequency phasors for the first three input channels (channel one taken as reference for sequence quantities)

These calculated values are then available for all built-in protection and control functions within the IED, which are connected to this preprocessing function block. For this application most of the preprocessing settings can be left to the default values. If frequency tracking and compensation is required (this feature is typically required only for IEDs installed in the generating stations) then the setting parameters *DFTReference* shall be set accordingly.

Section 5 Local human-machine interface

5.1 Local HMI

Figure 17: Local human-machine interface

The LHMI of the IED contains the following elements:

- Display (LCD)
- Buttons
- LED indicators
- Communication port

The LHMI is used for setting, monitoring and controlling.

5.1.1 Display

The LHMI includes a graphical monochrome display with a resolution of 320 x 240 pixels. The character size can vary. The amount of characters and rows fitting the view depends on the character size and the view that is shown.

The display view is divided into four basic areas.

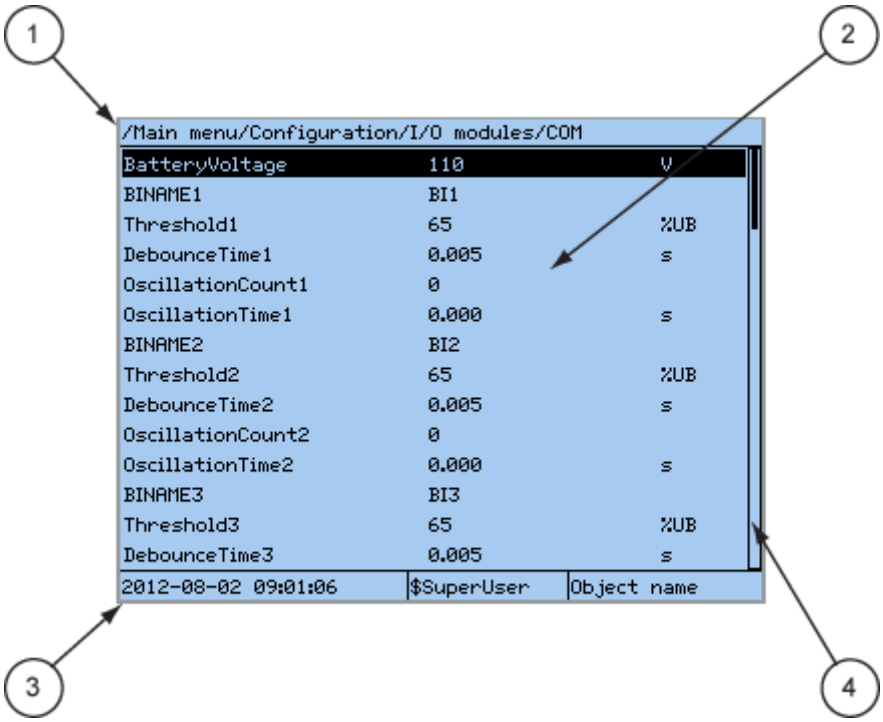

Figure 18: Display layout

1 Path
2 Content
3 Status
4 Scroll bar (appears when needed)

The function button panel shows on request what actions are possible with the function buttons. Each function button has a LED indication that can be used as a feedback signal for the function button control action. The LED is connected to the required signal with PCM600.

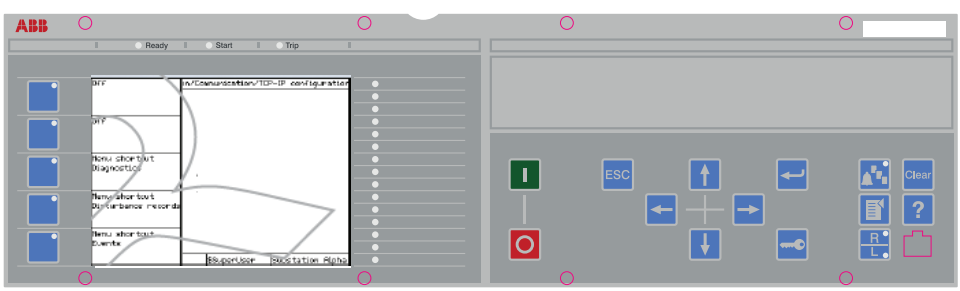

Figure 19: Function button panel

The alarm LED panel shows on request the alarm text labels for the alarm LEDs.

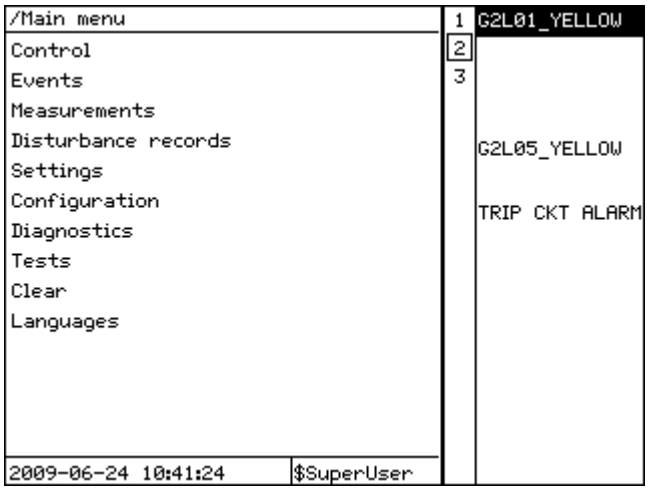

Figure 20: Alarm LED panel

The function button and alarm LED panels are not visible at the same time. Each panel is shown by pressing one of the function buttons or the Multipage button. Pressing the ESC button clears the panel from the display. Both the panels have dynamic width that depends on the label string length that the panel contains.

5.1.2 LEDs

The LHMI includes three protection status LEDs above the display: Ready, Start and Trip.

There are 15 programmable alarm LEDs on the front of the LHMI. Each LED can indicate three states with the colors: green, yellow and red. The alarm texts related to each three-color LED are divided into three pages.

There are 3 separate pages of LEDs available. The 15 physical three-color LEDs in one LED group can indicate 45 different signals. Altogether, 135 signals can be indicated since there are three LED groups. The LEDs can be configured with PCM600 and the operation mode can be selected with the LHMI or PCM600.

5.1.3 Keypad

The LHMI keypad contains push-buttons which are used to navigate in different views or menus. The push-buttons are also used to acknowledge alarms, reset indications, provide help and switch between local and remote control mode.

The keypad also contains programmable push-buttons that can be configured either as menu shortcut or control buttons.

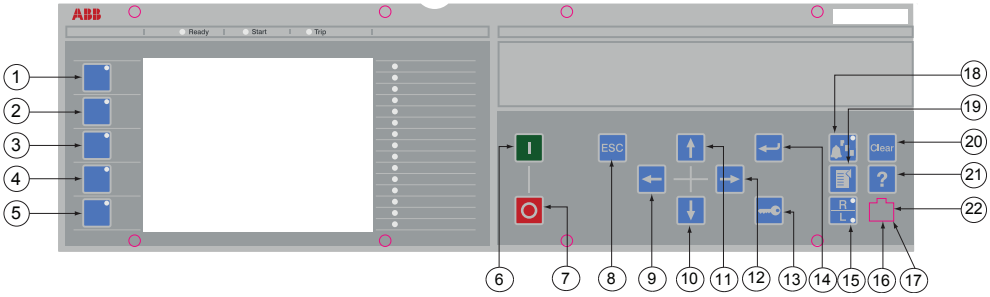

Figure 21: LHMI keypad with object control, navigation and command push-buttons and RJ-45 communication port

1...5	Function button
6	Close
7	Open
8	Escape
9	Left
10	Down
11	Up
12	Right
13	Key
14	Enter
15	Remote/Local
16	Uplink LED
17	Not in use
18	Multipage
19	Menu
20	Clear
21	Help
22	Communication port

5.1.4 Local HMI functionality

5.1.4.1 Protection and alarm indication

Protection indicators

The protection indicator LEDs are Ready, Start and Trip.

The start and trip LEDs are configured via the disturbance recorder.

Table 5: Ready LED (green)

LED state	Description
Off	Auxiliary supply voltage is disconnected.
On	Normal operation.
Flashing	Internal fault has occurred.

Table 6: Start LED (yellow)

LED state	Description
Off	Normal operation.
On	A protection function has started and an indication message is displayed. • The start indication is latching and must be reset via communication or by pressing Clear.
Flashing	A flashing yellow LED has a higher priority than a steady yellow LED. The IED is in test mode and protection functions are blocked. • The indication disappears when the IED is no longer in test mode and blocking is removed.

Table 7: Trip LED (red)

LED state	Description
Off	Normal operation.
On	A protection function has tripped and an indication message is displayed. • The trip indication is latching and must be reset via communication or by pressing Clear.

Alarm indicators

The 15 programmable three-color LEDs are used for alarm indication. An individual alarm/status signal, connected to any of the LED function blocks, can be assigned to one of the three LED colors when configuring the IED.

Table 8: Alarm indications

LED state	Description
Off	Normal operation. All activation signals are off.
On	• Follow-S sequence: The activation signal is on. • LatchedColl-S sequence: The activation signal is on, or it is off but the indication has not been acknowledged. • LatchedAck-F-S sequence: The indication has been acknowledged, but the activation signal is still on. • LatchedAck-S-F sequence: The activation signal is on, or it is off but the indication has not been acknowledged. • LatchedReset-S sequence: The activation signal is on, or it is off but the indication has not been acknowledged.
Flashing	• Follow-F sequence: The activation signal is on. • LatchedAck-F-S sequence: The activation signal is on, or it is off but the indication has not been acknowledged. • LatchedAck-S-F sequence: The indication has been acknowledged, but the activation signal is still on.

5.1.4.2 Parameter management

The LHMI is used to access the IED parameters. Three types of parameters can be read and written.

- Numerical values
- String values
- Enumerated values

Numerical values are presented either in integer or in decimal format with minimum and maximum values. Character strings can be edited character by character. Enumerated values have a predefined set of selectable values.

5.1.4.3 Front communication

The RJ-45 port in the LHMI enables front communication.

- The green uplink LED on the left is lit when the cable is successfully connected to the port.

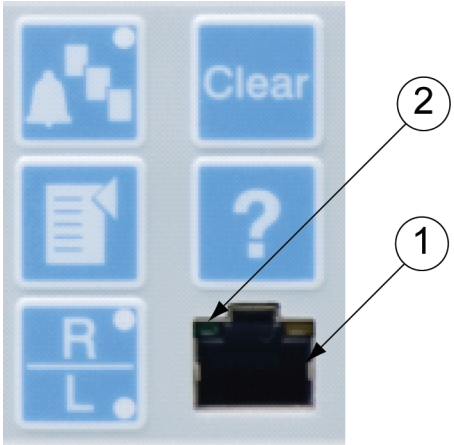

Figure 22: RJ-45 communication port and green indicator LED

1 RJ-45 connector
2 Green indicator LED

When a computer is connected to the IED front port with a crossed-over cable, the IED's DHCP server for the front interface assigns an IP address to the computer if *DHCPServer* = *On*. The default IP address for the front port is 10.1.150.3.

Do not connect the IED front port to a LAN. Connect only a single local PC with PCM600 to the front port.

Section 6 Differential protection

6.1 1Ph High impedance differential protection HZPDIF

6.1.1 Identification

Function description	IEC 61850 identification	IEC 60617 identification	ANSI/IEEE C37.2 device number
1Ph High impedance differential protection	HZPDIF	*Id*	87

6.1.2 Application

Three instances of 1Ph High impedance differential protection function HZPDIF is used as a busbar protection for one busbar zone.

The 1Ph High impedance differential protection function HZPDIF can be used as a restricted earth fault protection.

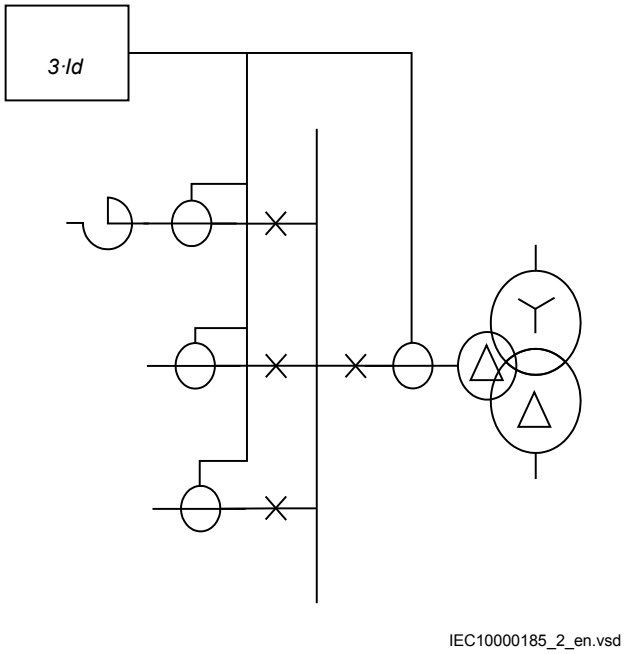

Figure 23: Application of a 1Ph High impedance differential protection HZPDIF function as busbar protection

6.1.2.1 The basics of the high impedance principle

The high impedance differential protection principle has been used for many years and is well documented. The operating characteristic provides very good sensitivity and high speed operation. One main benefit offered by the principle is an absolute stability (that is, non-operation) for external faults even in the presence of heavy CT saturation. The principle is based on the CT secondary current circulating between involved current transformers and not through the IED due to its high impedance, normally in the range of hundreds of ohms and sometimes above Kiloohm. When an internal fault occurs the current cannot circulate and is forced through the differential circuit causing operation.

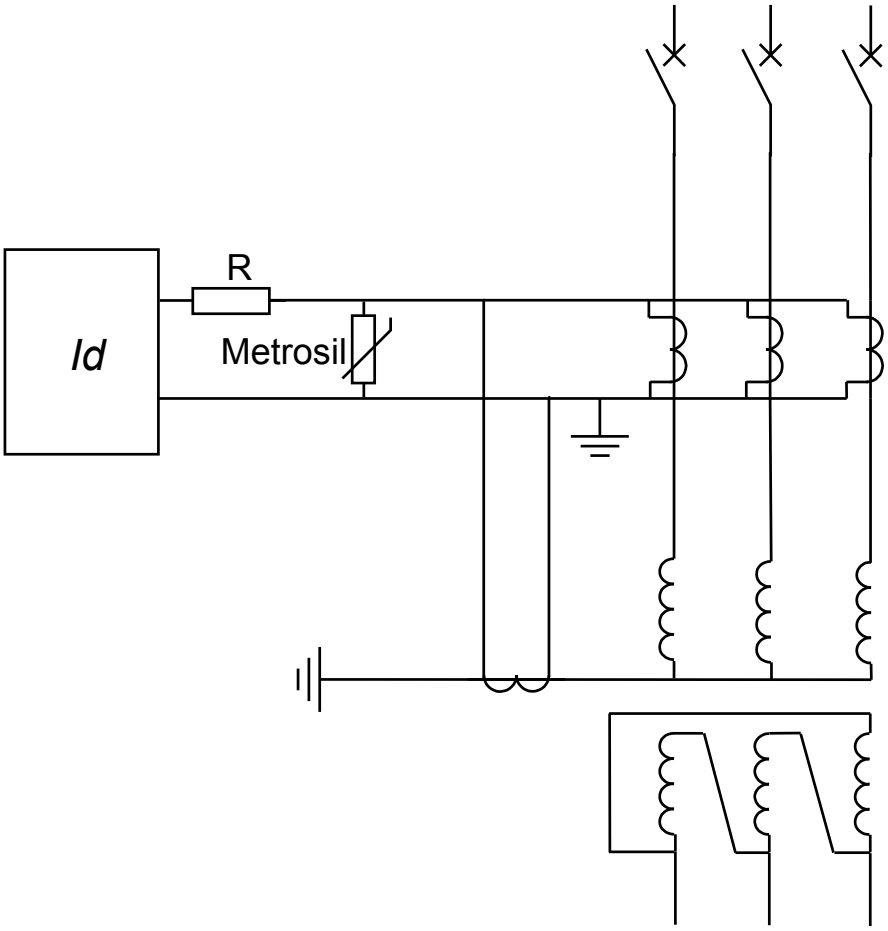

IEC05000164-2-en.vsd

Figure 24: Example for the high impedance restricted earth fault protection application

For a through fault one current transformer might saturate when the other CTs still will feed current. For such a case a voltage will be developed across the stabilising resistor. The calculations are made with the worst situations in mind and a minimum operating voltage U_R is calculated according to equation 8

$$UR > IF\max \cdot \left(Rct + Rl\right)$$

(Equation 8)

where:

*IF*max	is the maximum through fault current at the secondary side of the CT
Rct	is the current transformer secondary resistance and
Rl	is the maximum loop resistance of the circuit at any CT.

The minimum operating voltage has to be calculated (all loops) and the function is set higher than the highest achieved value (setting *U>Trip*). As the loop resistance is the value to the connection point from each CT, it is advisable to do all the CT core summations in the switchgear to have shortest possible loops. This will give lower setting values and also a better balanced scheme. The connection in to the control room can then be from the most central bay.

For an internal fault, circulation is not possible, due to the high impedance. Depending on the size of current transformer, relatively high voltages will be developed across the series resistor. Note that very high peak voltages can appear. To prevent the risk of flashover in the circuit, a voltage limiter must be included. The voltage limiter is a voltage dependent resistor (Metrosil).

The external unit with stabilizing resistor has a value of either 6800 ohms or 1800 ohms (depending on ordered alternative) with a shorting link to allow adjustment to the required value. Select a suitable value of the resistor based on the UR voltage calculated. A higher resistance value will give a higher sensitivity and a lower value a lower sensitivity.

The function has a recommended operating current range 40 mA to 1.0A for 1 A inputs and 200 mA to 5A for 5A inputs. This, together with the selected and set value, is used to calculate the required value of current at the set *U>Trip* and *SeriesResitor* values.

The CT inputs used for 1Ph High impedance differential protection HZPDIF function, shall be set to have ratio 1:1. So the parameters CT_{secx} and CT_{primx} of the relevant channel x of TRM and/or AIM shall be set equal to 1 A by PST in PCM600; The parameter *CTStarPointx* may be set to *ToObject*.

The tables 9, 10 below show, the operating currents for different settings of operating voltages and selected resistances. Adjust as required based on tables 9, 10 or to values in between as required for the application.

Minimum ohms can be difficult to adjust due to the small value compared to the total value.

Normally the voltage can be increased to higher values than the calculated minimum *U>Trip* with a minor change of total operating values as long as this is done by adjusting the resistor to a higher value. Check the sensitivity calculation below for reference.

Table 9: 1 A channels: input with minimum operating down to 20 mA

Operating voltage *U>Trip*	Stabilizing resistor R ohms	Operating current level 1 A	Stabilizing resistor R ohms	Operating current level 1 A	Stabilizing resistor R ohms	Operating current level 1 A
20 V	1000	0.020 A	--	--	--	--
40 V	2000	0.020 A	1000	0.040 A	--	--
60 V	3000	0.020 A	1500	0.040 A	600	0.100 A
80 V	4000	0.020 A	2000	0.040 A	800	0.100 A
100 V	5000	0.020 A	2500	0.040 A	1000	0.100 A
150 V	6000	0.020 A	3750	0.040 A	1500	0.100 A
200 V	6800	0.029 A	5000	0.040 A	2000	0.100 A

Table 10: 5 A channels: input with minimum operating down to 100 mA

Operating voltage *U>Trip*	Stabilizing resistor R1 ohms	Operating current level 5 A	Stabilizing resistor R1 ohms	Operating current level 5 A	Stabilizing resistor R1 ohms	Operating current level 5 A
20 V	200	0.100 A	100	0.200 A	--	--
40 V	400	0.100 A	200	0.200 A	100	0.400
60 V	600	0.100 A	300	0.200 A	150	0.400 A
80 V	800	0.100 A	400	0.200 A	200	0.400 A
100 V	1000	0.100 A	500	0.200 A	250	0.400 A
150 V	1500	0.100 A	750	0.200 A	375	0.400 A
200 V	2000	0.100 A	1000	0.200 A	500	0.400 A

The current transformer saturating voltage must be at least 2 · *U>Trip* to have sufficient operating margin. This must be checked after calculation of *U>Trip*.

When the R value has been selected and the *U>Trip* value has been set, the sensitivity of the scheme *IP* can be calculated. The sensitivity is decided by the total current in the circuit according to equation 9.

$$IP = n \cdot (IR + Ires + \sum lmag)$$

(Equation 9)

where:

n	is the CT ratio
IP	primary current at IED pickup,
IR	IED pickup current
Ires	is the current through the non-linear resistorand
ΣImag	is the sum of the magnetizing currents from all CTs in the circuit (for example, 4 CTs for restricted earth fault protection, 2 CTs for reactor differential protection, 3-5 CTs for autotransformer differential protection , the number of feeders, including the buscoupler, for busbar differential protection).

It should be remembered that the vectorial sum of the currents must be used (IEDs, Metrosil and resistor currents are resistive). The current measurement is insensitive to DC component in fault current to allow a use of only the AC components of the fault current in the above calculations.

The voltage dependent resistor (Metrosil) characteristic is shown in figure 27.

A shunt can be added in parallel to the non-linear resistor in order to desensitize the function.

Series resistor thermal capacity

The series resistor is dimensioned for 200 W. Preferable the $U>Trip^2/SeriesResistor$ should always be lower than 200 W to allow continuous activation on during testing. If this value is exceeded, testing should be done with transient faults.

The series resistor is dimensioned for 200 W. The condition: $U>Trip^2/SeriesResistor$ shall be fulfilled. In this condition the continuous injection is allowed during testing.

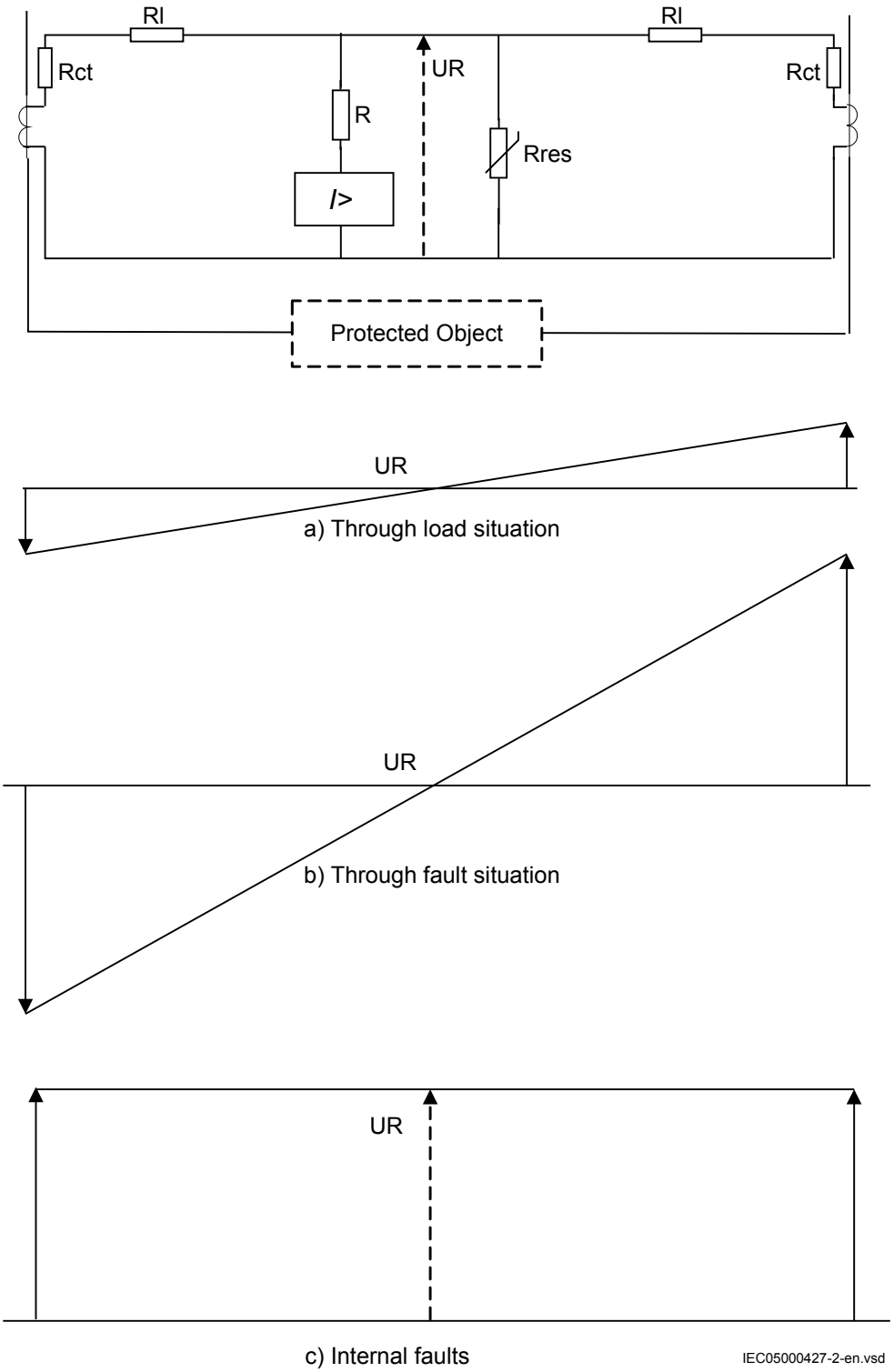

Figure 25: The high impedance principle for one phase with two current transformer inputs

6.1.3 Setting guidelines

The setting calculations are individual for each application. Refer to the different application descriptions below.

6.1.3.1 Configuration

The configuration is done in the Application Configuration tool. For example, signals from external check criteria shall be connected to the inputs as required for the application.

BLOCK input is used to block the function for example, from external check criteria.

BLKTR input is used to block the function tripping for example, from external check criteria. The alarm level will be operative.

6.1.3.2 Settings of protection function

Operation: The operation of the high impedance differential function can be switched *On* or *Off*.

U>Alarm: Set the alarm level. The sensitivity can roughly be calculated as a divider from the calculated sensitivity of the differential level. A typical setting is 10% of *U>Trip* It can be used as scheme supervision stage.

tAlarm: Set the time for the alarm. A typical setting is 2-3 seconds.

U>Trip: Set the trip level according to the calculations in the examples for each application example. The level is selected with margin to the calculated required voltage to achieve stability. Values can be 20-200 V dependent on the application.

SeriesResistor: Set the value of the stabilizing series resistor. Calculate the value according to the examples for each application. Adjust the resistor as close as possible to the calculated example. Measure the value achieved and set this value here.

The value shall always be high impedance. This means for example, for 1A circuits say bigger than 400 ohms (400 VA) and for 5 A circuits say bigger than 100 ohms (2500 VA). This ensures that the current will circulate and not go through the differential circuit at through faults.

6.1.3.3 Busbar protection

The 1Ph High impedance differential protection HZPDIF function can be used to protect the busbars with relatively few feeders.

The protection is suitable for all voltage levels, and for several type of substation layouts, like single busbar, single busbar with sectionalizer, double busbar, ring substation with up to three zones.

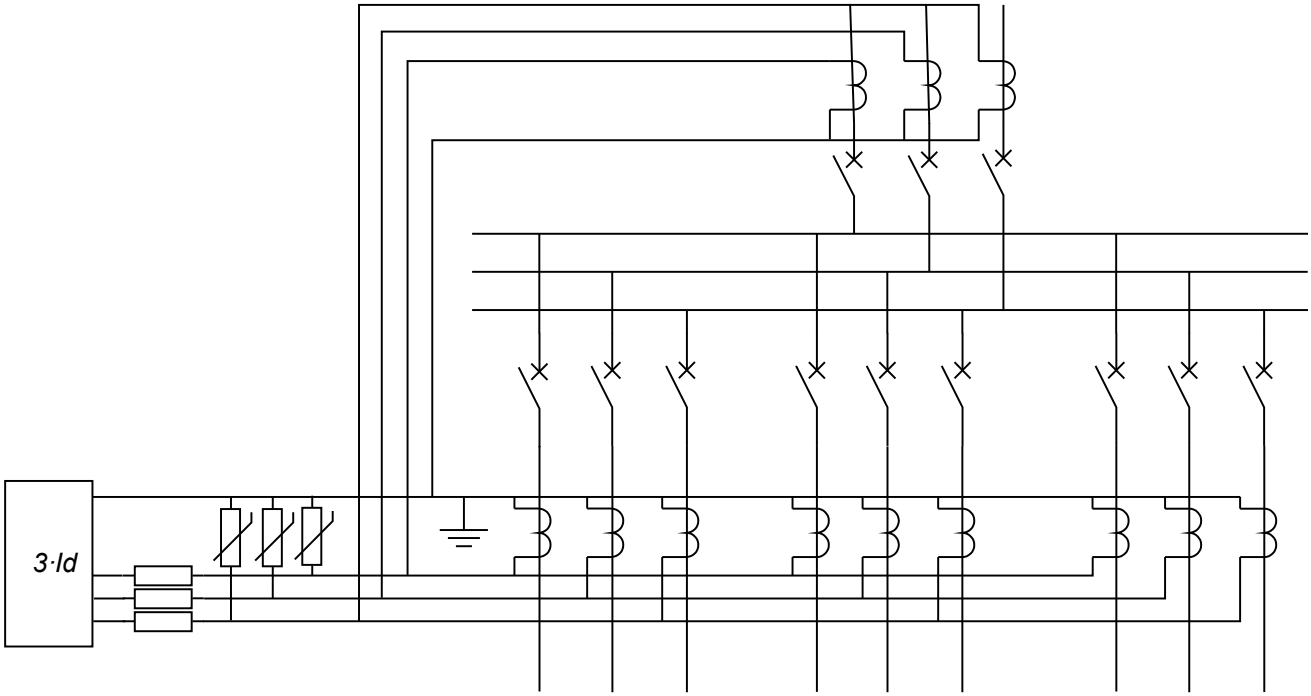

IEC05000774-3-en.vsd

Figure 26: Application of the high impedance differential function on busbar

Setting example

It is strongly recommended to use the highest tap of the CT whenever high impedance protection is used. This helps in utilizing maximum CT capability, minimize the current, thereby reducing the stability voltage limit. Another factor is that during internal faults, the voltage developed across the selected tap is limited by the non-linear resistor but in the unused taps, owing to auto-transformer action, voltages much higher than design limits might be induced.

Either class TPS or PX CTs, according to IEC standards, are usually selected for the high impedance differential protection. We suppose to use class PX CTs in the following example.

Basic data:

Current transformer ratio:	2000/1 A (Note: Must be the same at all locations)
CT Class:	10VA PX
Secondary resistance:	5.5 ohms
Rated knee point Ek	300 V
Cable loop resistance:	Note! Only one way as the system earthing is limiting the earth-fault current. If high earth-fault current exists use two way cable. <50 m 2.5mm^2(one way)r_Cu = 0.021 (ohm . mm2)/m at 75°CR_{sec} = r_Cu . l/A = 0.021 . 50 / 2.5 = 0.42 ohm at 75°CRloop = Rsec = 0.42 ohm
	One way as the system earthing is limiting the earth-fault current. If the neutral solidly grounded, then a high-earth- fault current exists, and a two way cable is considered for the loop
Max fault current:	The maximum through fault current given by the transformer reactance for example, 28 kA.

Calculation:

$$UR > \frac{28000}{2000}.(5.5 + 0.42) = 82.9V$$

(Equation 10)

Select a setting of *U>Trip*=100 V.

The rated saturation Ek of the current transformer shall fulfill the following conditions: Ek > 0,8 * 2* UR = 132,64 VEk > 2 * *U>Trip* = 200 VThe requested conditions are fulfilled because Ek = 300 V.

Check from the table of selected resistances the required series stabilizing resistor value to use. As this application it is not required to be so sensitive so select *SeriesResistor*=1000 ohm, which gives an IED current of 100 mA.

To calculate the sensitivity at operating voltage, refer to equation 11 which gives an acceptable value; in fact in this example the sensitivity is about 13% of the nominal current of the CT:

$$IP = \frac{2000}{1}.(0.1\angle 0^0 + 0.005\angle 0^0 + 4.0.015\angle -60^0) = approx.270A$$

(Equation 11)

Where

IR= 100mA	is the current drawn by the IED circuit
I_{mag} = 15mA	is the magnetizing current of the CT at the operating voltage *U>Trip* Ires = 5 mA is the current drawn by the non-linear resistor at the operating voltage *U>Trip*

The magnetizing current is taken from the magnetizing curve for the current transformer cores which should be available. The value at *U>Trip* is taken. For the voltage dependent resistor current the amplitude value of voltage 100 · √2 is used and the top current used. Then the RMS current is calculated by dividing with √2. Use the maximum value from the curve.

Setting of U>Alarm.

This setting is related to the detection of an open CT. If the secondary wiring of the CT of one bay is open, then there is an unbalance condition. The minimum current that the protection function can detect is 20 mA, if the nominal secondary current of the CT is 1 A. The voltage UR_unb which is related to IR_unb = 20 mA is:

UR_unb = R . IR_unb = 1000 . 0.02 = 20 V

U>Alarm = UR_unb = 20 V

We suppose that: the magnetizing current of the CT at UR_unb is 3,7 mA, with an angle of -60°; the current that is drawn by the non-linear resistor at UR_unb is about 1.8 mA. So the sensitivity in primary current is: IP = 2000/1 * (0.02 /_0° + 0.0018 /_0° + 4* 0.0037 /_-60°) = 58 A The sensitivity should allow the detection of the open CT on the smallest object in normal load condition.

6.1.3.4 Alarm level operation

The 1Ph High impedance differential protection HZPDIF function has a separate alarm level, which can be used to give alarm for problems with an involved current transformer circuit. The setting level is normally selected to be around 10% of the operating voltage *U>Trip*.

The setting of U> Alarm is related to the value of the stabilizing resistor and the minimum current sensitivity. The setting example shows the calculation procedure of the setting value of U> Alarm.

As seen in the setting examples above the sensitivity of HZPDIF function is normally high, which means that the function will in many cases operate also for short circuits or open current transformer secondary circuits. However the stabilizing resistor can be selected to achieve sensitivity higher than normal load current and/or separate criteria can be added to the operation, a check zone. This can be either another IED, with the same HZPDIF function, or be a check about the fault condition, which is performed by an earth overcurrent function or neutral point voltage function.

For such cases where operation is not expected during normal service the alarm output should be used to activate an external shorting of the differential circuit avoiding continuous high voltage in the circuit. A time delay of a few seconds is used before the shorting and alarm are activated. Auxiliary relays with contacts that can withstand high voltage shall be used, like RXMVB types. Use auxiliary relays with contacts that can withstand high voltages for example, RXMVB types.

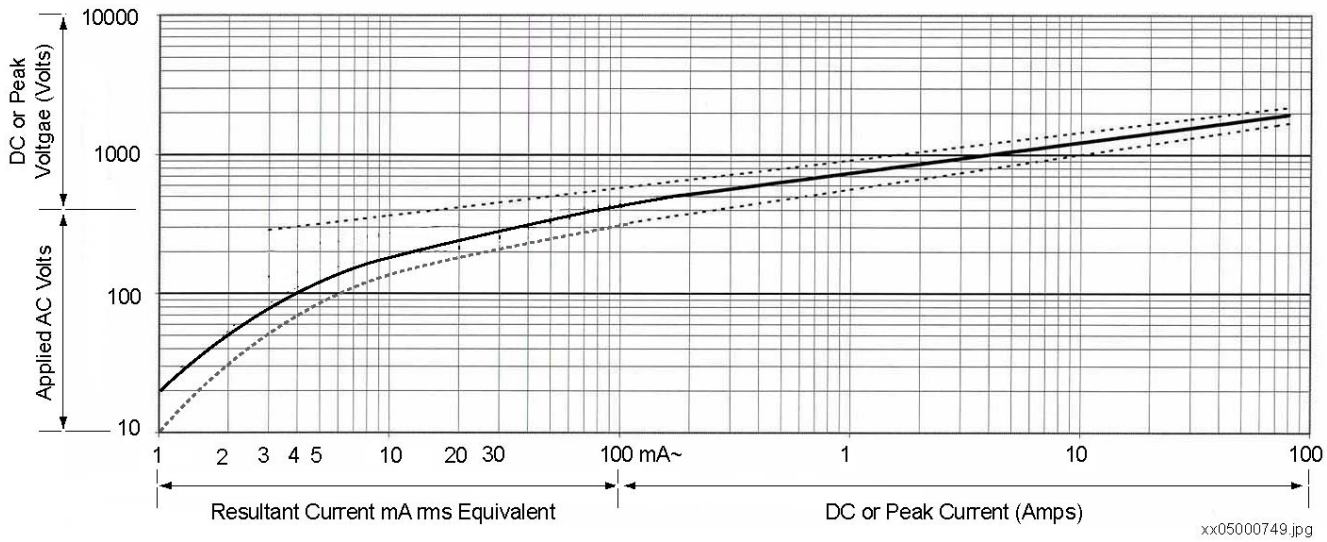

Figure 27: Current voltage characteristics for the non-linear resistors, in the range 10-200 V, the average range of current is: 0.01–10 mA

6.1.3.5 Double busbar applications

In double busbar applications, the CTs shall be connected to the right protection zone according to the position of the disconnectors.

Normally, open (early closing) auxillary contacts of the disconnectors shall be used to energize auxillary relays which perform the CT switching; these auxillary relays shall have contacts which withstand high voltage, like RXMVB type.

In this application, the use of check zone is recommended; the third zone available in REB650 can be used as check zone.

Separate CT cores shall be used for check zone.

Section 7 Current protection

7.1 Four step phase overcurrent protection 3-phase output OC4PTOC

7.1.1 Identification

Function description	IEC 61850 identification	IEC 60617 identification	ANSI/IEEE C37.2 device number
Four step phase overcurrent protection 3-phase output	OC4PTOC	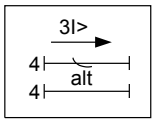	51/67

7.1.2 Application

The Four step phase overcurrent protection 3-phase output OC4PTOC is used in several applications in the power system. Some applications are:

- Short circuit protection of feeders in distribution and subtransmission systems. Normally these feeders have radial structure.
- Back-up short circuit protection of transmission lines.
- Back-up short circuit protection of power transformers.
- Short circuit protection of different kinds of equipment connected to the power system such as; shunt capacitor banks, shunt reactors, motors and others.
- Back-up short circuit protection of power generators.

If VT inputs are not available or not connected, setting parameter *DirModex* (*x* = step 1, 2, 3 or 4) shall be left to default value *Non-directional*or set to *Off*.

In many applications several steps with different current pick up levels and time delays are needed. OC4PTOC can have up to four different, individual settable, steps. The flexibility of each step of OC4PTOC is great. The following options are possible:

Non-directional / Directional function: In most applications the non-directional functionality is used. This is mostly the case when no fault current can be fed from

the protected object itself. In order to achieve both selectivity and fast fault clearance, the directional function can be necessary.

Choice of delay time characteristics: There are several types of delay time characteristics available such as definite time delay and different types of inverse time delay characteristics. The selectivity between different overcurrent protections is normally enabled by co-ordination between the function time delays of the different protections. To enable optimal co-ordination between all overcurrent protections, they should have the same time delay characteristic. Therefore a wide range of standardized inverse time characteristics are available: IEC and ANSI.

The time characteristic for step 1 and 4 can be chosen as definite time delay or inverse time characteristic. Step 2 and 3 are always definite time delayed and are used in system where IDMT is not needed.

Power transformers can have a large inrush current, when being energized. This phenomenon is due to saturation of the transformer magnetic core during parts of the period. There is a risk that inrush current will reach levels above the pick-up current of the phase overcurrent protection. The inrush current has a large 2nd harmonic content. This can be used to avoid unwanted operation of the protection. Therefore, OC4PTOC have a possibility of 2nd harmonic restrain if the level of this harmonic current reaches a value above a set percentage of the fundamental current.

7.1.3 Setting guidelines

The parameters for Four step phase overcurrent protection 3-phase output OC4PTOC are set via the local HMI or PCM600.

The following settings can be done for OC4PTOC.

GlobalBaseSel: Selects the global base value group used by the function to define (*IBase*), (*UBase*) and (*SBase*).

MeasType: Selection of discrete Fourier filtered (*DFT*) or true RMS filtered (*RMS*) signals. *RMS* is used when the harmonic contents are to be considered, for example in applications with shunt capacitors.

Operation: The protection can be set to *Off* or *On*

2ndHarmStab: Operate level of 2nd harmonic current restrain set in % of the fundamental current. The setting range is *5* - *100*% in steps of 1%. Default setting is 20%.

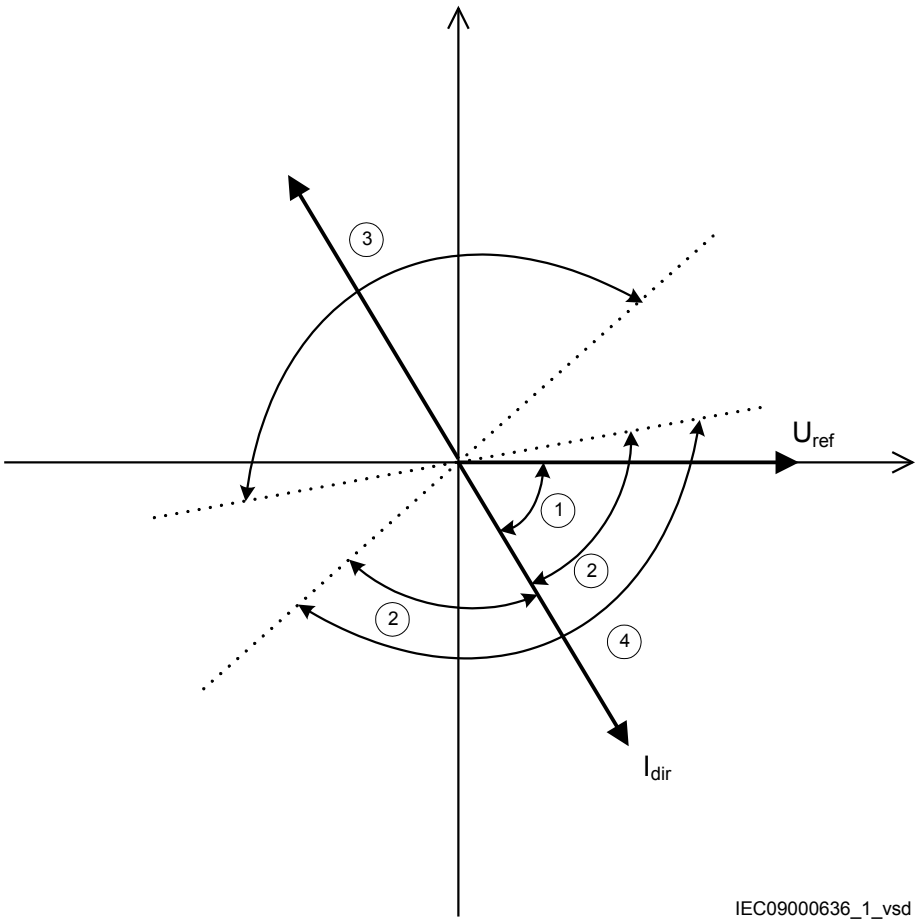

Figure 28: Directional function characteristic

1. RCA = Relay characteristic angle 55°
2. ROA = Relay operating angle 80°
3. Reverse
4. Forward

7.1.3.1 Settings for steps 1 to 4

n means step 1 and 4. *x* means step 1, 2, 3 and 4.

DirModex: The directional mode of step *x*. Possible settings are *Off*/*Non-directional*/*Forward*/*Reverse*.

Characteristn: Selection of time characteristic for step *n*. Definite time delay and different types of inverse time characteristics are available according to table 11. Step 2 and 3 are always definite time delayed.

Table 11: Inverse time characteristics

Curve name
ANSI Extremely Inverse
ANSI Very Inverse
ANSI Normal Inverse
ANSI Moderately Inverse
ANSI/IEEE Definite time
ANSI Long Time Extremely Inverse
ANSI Long Time Very Inverse
ANSI Long Time Inverse
IEC Normal Inverse
IEC Very Inverse
IEC Inverse
IEC Extremely Inverse
IEC Short Time Inverse
IEC Long Time Inverse
IEC Definite Time
ASEA RI
RXIDG (logarithmic)

The different characteristics are described in Technical manual.

Ix>: Operate phase current level for step *x* given in % of *IBase*.

tx: Definite time delay for step *x*. Used if definite time characteristic is chosen.

kn: Time multiplier for inverse time delay for step *n*.

IMinn: Minimum operate current for step *n* in % of *IBase*. Set *IMinn* below *Ix>* for every step to achieve ANSI reset characteristic according to standard. If *IMinn* is set above *Ix>* for any step the ANSI reset works as if current is zero when current drops below *IMinn*.

tnMin: Minimum operate time for all inverse time characteristics. At high currents the inverse time characteristic might give a very short operation time. By setting this parameter the operation time of the step can never be shorter than the setting. Setting range: 0.000 - 60.000s in steps of 0.001s.

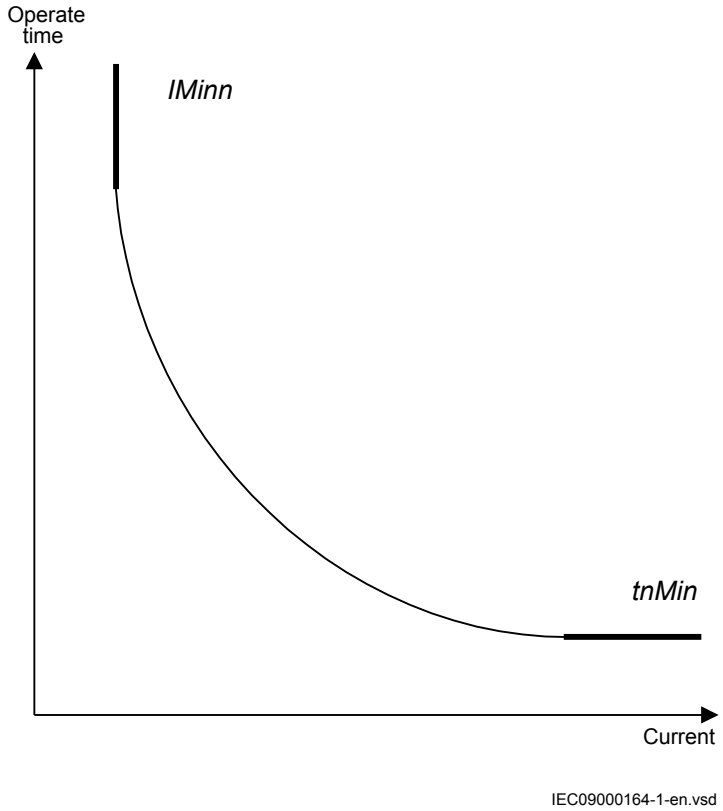

Figure 29: Minimum operate current and operation time for inverse time characteristics

In order to fully comply with curves definition setting parameter *tnMin* shall be set to the value, which is equal to the operating time of the selected inverse curve for measured current of twenty times the set current pickup value. Note that the operating time value is dependent on the selected setting value for time multiplier *kn*.

HarmRestrainx: Enable block of step *n* from the harmonic restrain function (2nd harmonic). This function should be used when there is a risk if power transformer inrush currents might cause unwanted trip. Can be set *Off*/*On*.

7.1.3.2 2nd harmonic restrain

If a power transformer is energized there is a risk that the transformer core will saturate during part of the period, resulting in an inrush transformer current. This will give a declining residual current in the network, as the inrush current is deviating between the phases. There is a risk that the phase overcurrent function will give an unwanted trip. The inrush current has a relatively large ratio of 2nd harmonic component. This component can be used to create a restrain signal to prevent this unwanted function.

The settings for the 2nd harmonic restrain are described below.

2ndHarmStab: The rate of 2nd harmonic current content for activation of the 2nd harmonic restrain signal, to block chosen steps. The setting is given in % of the fundamental frequency residual current. The setting range is *5 - 100*% in steps of 1%. The default setting is 20% and can be used if a deeper investigation shows that no other value is needed..

HarmRestrainx: This parameter can be set *Off*/*On*, to disable or enable the 2nd harmonic restrain.

The four step phase overcurrent protection 3-phase output can be used in different ways, depending on the application where the protection is used. A general description is given below.

The operating current setting inverse time protection or the lowest current step constant inverse time protection must be given a current setting so that the highest possible load current does not cause protection operation. Here consideration also has to be taken to the protection reset current, so that a short peak of overcurrent does not cause operation of the protection even when the overcurrent has ceased. This phenomenon is described in figure 30.

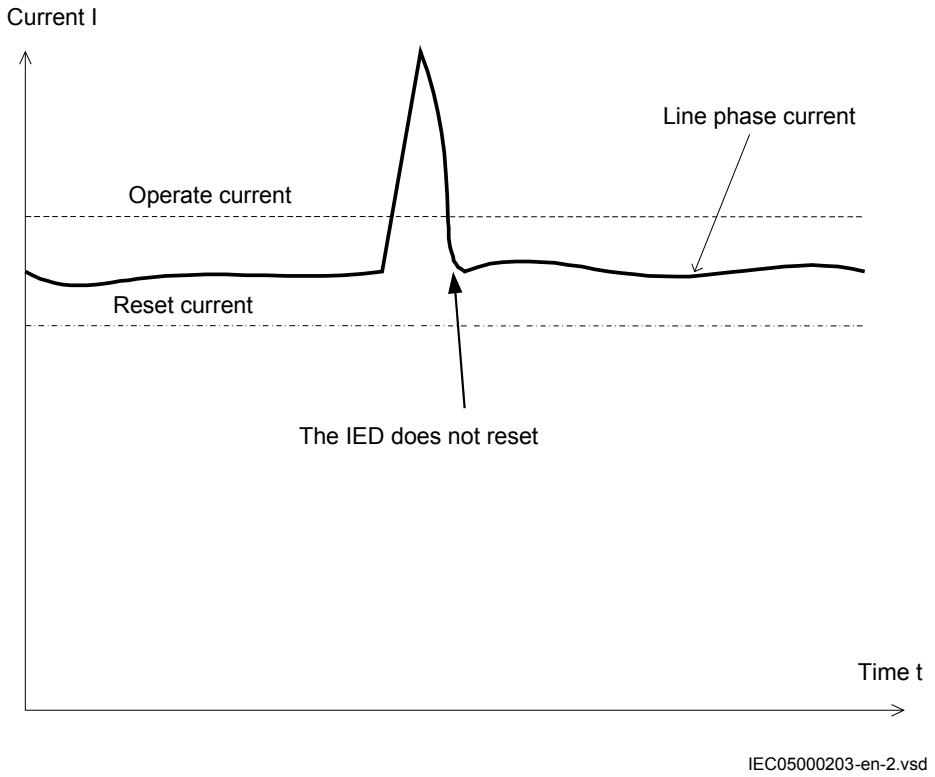

Figure 30: Operate and reset current for an overcurrent protection

The lowest setting value can be written according to equation 12.

$$Ipu \geq 1.2 \cdot \frac{Imax}{k}$$

(Equation 12)

where:

1.2	is a safety factor,
k	is the resetting ratio of the protection
Imax	is the maximum load current.

The maximum load current on the line has to be estimated. There is also a demand that all faults, within the zone that the protection shall cover, must be detected by the phase overcurrent protection. The minimum fault current Iscmin, to be detected by the protection, must be calculated. Taking this value as a base, the highest pick up current setting can be written according to equation 13.

$$Ipu \leq 0.7 \cdot Iscmin$$

(Equation 13)

where:

0.7	is a safety factor
Iscmin	is the smallest fault current to be detected by the overcurrent protection.

As a summary the operating current shall be chosen within the interval stated in equation 14.

$$1.2 \cdot \frac{Imax}{k} \leq Ipu \leq 0.7 \cdot Iscmin$$

(Equation 14)

The high current function of the overcurrent protection, which only has a short delay of the operation, must be given a current setting so that the protection is selective to other protection in the power system. It is desirable to have a rapid tripping of faults within as large portion as possible of the part of the power system to be protected by the protection (primary protected zone). A fault current calculation gives the largest current of faults, Iscmax, at the most remote part of the primary protected zone. Considerations have to be made to the risk of transient overreach, due to a possible DC component of the short circuit current. The lowest current setting of the most rapid stage, of the phase overcurrent protection, can be written according to

$$I_{high} \geq 1.2 \cdot k_t \cdot I_{sc\max}$$

(Equation 15)

where:

1.2 is a safety factor,

k_t is a factor that takes care of the transient overreach due to the DC component of the fault current and can be considered to be less than 1.1

Iscmax is the largest fault current at a fault at the most remote point of the primary protection zone.

The operate times of the phase overcurrent protection has to be chosen so that the fault time is so short that protected equipment will not be destroyed due to thermal overload, at the same time as selectivity is assured. For overcurrent protection, in a radial fed network, the time setting can be chosen in a graphical way. This is mostly used in the case of inverse time overcurrent protection. Figure 31 shows how the time-versus-current curves are plotted in a diagram. The time setting is chosen to get the shortest fault time with maintained selectivity. Selectivity is assured if the time difference between the curves is larger than a critical time difference.

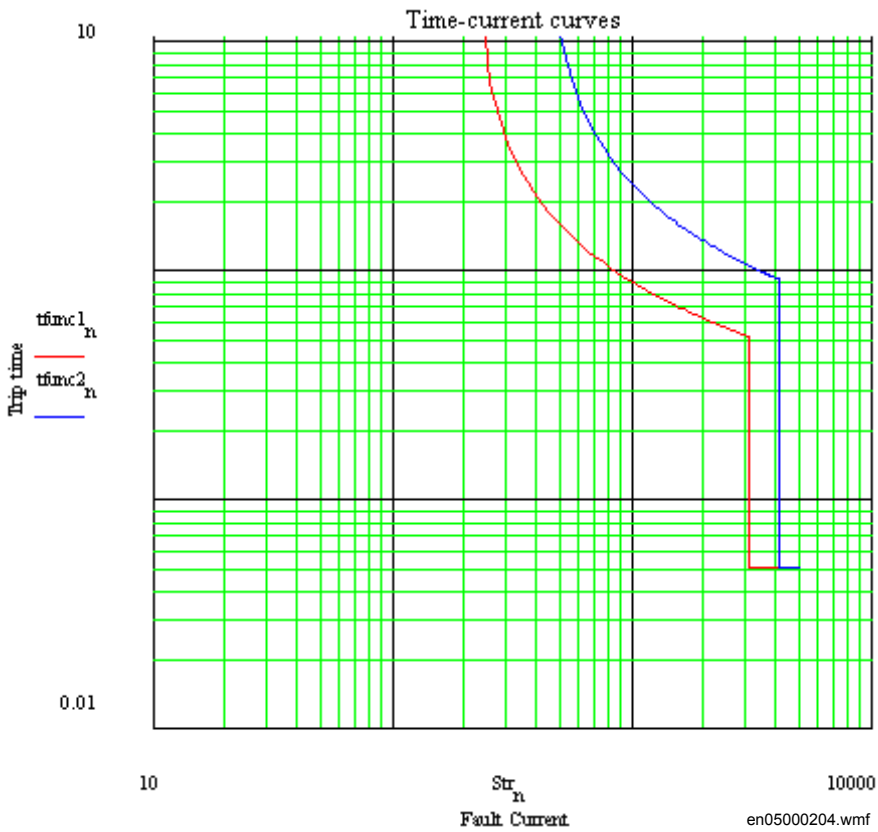

Figure 31: Fault time with maintained selectivity

To assure selectivity between different protections, in the radial network, there have to be a minimum time difference Δt between the time delays of two protections. The minimum time difference can be determined for different cases. To determine the shortest possible time difference, the operation time of protections, breaker opening time and protection resetting time must be known. These time delays can vary significantly between different protective equipment. The following time delays can be estimated:

Protection operation time:	15-60 ms
Protection resetting time:	15-60 ms
Breaker opening time:	20-120 ms

Example for time coordination

Assume two substations A and B directly connected to each other via one line, as shown in the figure 32. Consider a fault located at another line from the station B. The fault current to the overcurrent protection of IED B1 has a magnitude so that the protection will have instantaneous function. The overcurrent protection of IED A1 must have a delayed function. The sequence of events during the fault can be described using a time axis, see figure 32.

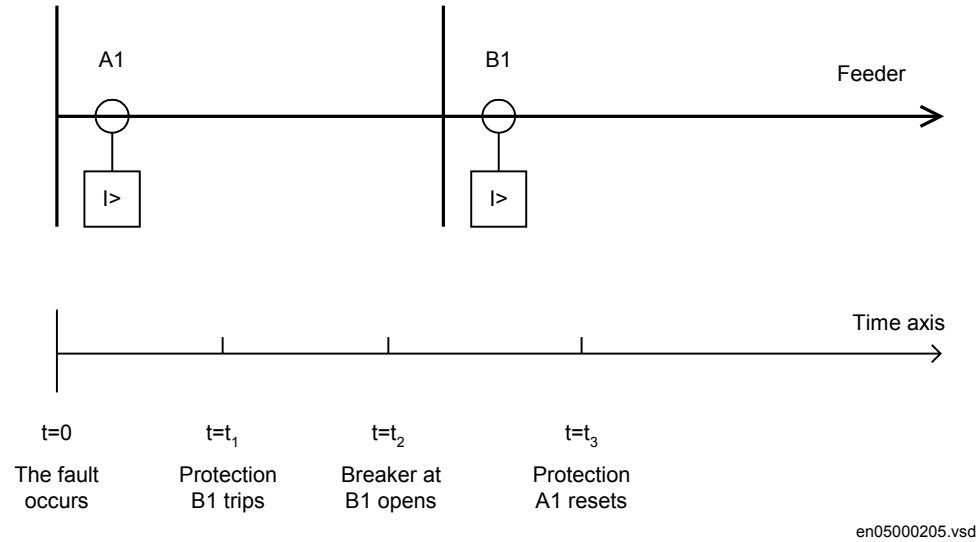

Figure 32: Sequence of events during fault

where:

t=0	is when the fault occurs,
$t=t_1$	is when the trip signal from the overcurrent protection at IED B1 is sent to the circuit breaker. The operation time of this protection is t_1,
$t=t_2$	is when the circuit breaker at IED B1 opens. The circuit breaker opening time is t_2 - t_1 and
$t=t_3$	is when the overcurrent protection at IED A1 resets. The protection resetting time is t_3 - t_2.

To ensure that the overcurrent protection at IED A1, is selective to the overcurrent protection at IED B1, the minimum time difference must be larger than the time t_3. There are uncertainties in the values of protection operation time, breaker opening time and protection resetting time. Therefore a safety margin has to be included. With normal values the needed time difference can be calculated according to equation 16.

$$\Delta t \geq 40\,ms + 100\,ms + 40\,ms + 40\,ms = 220\,ms$$

(Equation 16)

where it is considered that:

the operate time of overcurrent protection B1	is 40 ms
the breaker open time	is 100 ms
the resetting time of protection A1	is 40 ms and
the additional margin	is 40 ms

7.2 Four step residual overcurrent protection, zero, negative sequence direction EF4PTOC

7.2.1 Identification

Function description	IEC 61850 identification	IEC 60617 identification	ANSI/IEEE C37.2 device number
Four step residual overcurrent protection, zero or negative sequence direction	EF4PTOC	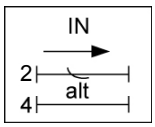	51N/67N

7.2.2 Application

The four step residual overcurrent protection, zero or negative sequence direction EF4PTOC is used in several applications in the power system. Some applications are:

- Earth-fault protection of feeders in effectively earthed distribution systems. Normally these feeders have radial structure.
- Back-up earth-fault protection of subtransmission and transmission lines.
- Sensitive earth-fault protection of transmission lines. EF4PTOC can have better sensitivity to detect resistive phase-to-earth-faults compared to distance protection.
- Back-up earth-fault protection of power transformers with earth source at substation.
- Earth-fault protection of different kinds of equipment connected to the power system such as shunt capacitor banks, shunt reactors and others.
- Negative sequence direcitonal earth-fault protection of feeders with PTs connected in Open Delta connection from which it is not possible to derive Zero sequence voltage.
- Negative sequence directional earth-fault protection of double-circuit medium or long transmission lines with significant mutual coupling.

In many applications several steps with different current operating levels and time delays are needed. EF4PTOC can have up to four, individual settable steps. The flexibility of each step of EF4PTOC is great. The following options are possible:

Non-directional/Directional function: In some applications the non-directional functionality is used. This is mostly the case when no fault current can be fed from the protected object itself. In order to achieve both selectivity and fast fault clearance, the directional function can be necessary. This can be the case for earth-fault protection in meshed and effectively earthed transmission systems. The directional residual overcurrent protection is also well suited to operate in teleprotection communication schemes, which enables fast clearance of earth faults

on transmission lines. The directional function uses the polarizing quantity as decided by setting. Voltage polarizing ($3U_0$ or U_2) is most commonly used, but alternatively current polarizing ($3I_0$ or I_2) where currents in transformer neutrals providing the neutral (zero sequence) source (ZN) is used to polarize (IPol · ZN) the function. Dual polarizing where the sum of both voltage and current components is allowed to polarize can also be selected.

Choice of time characteristics: There are several types of time characteristics available such as definite time delay and different types of inverse time characteristics. The selectivity between different overcurrent protections is normally enabled by co-ordination between the operate time of the different protections. To enable optimal co-ordination all overcurrent protections, to be co-ordinated against each other, should have the same time characteristic. Therefore a wide range of standardized inverse time characteristics are available: IEC and ANSI. The time characteristic for step 1 and 4 can be chosen as definite time delay or inverse time characteristic. Step 2 and 3 are always definite time delayed and are used in system where IDMT is not needed.

Table 12: Time characteristics

Curve name
ANSI Extremely Inverse
ANSI Very Inverse
ANSI Normal Inverse
ANSI Moderately Inverse
ANSI/IEEE Definite time
ANSI Long Time Extremely Inverse
ANSI Long Time Very Inverse
ANSI Long Time Inverse
IEC Normal Inverse
IEC Very Inverse
IEC Inverse
IEC Extremely Inverse
IEC Short Time Inverse
IEC Long Time Inverse
IEC Definite Time
ASEA RI
RXIDG (logarithmic)

Power transformers can have a large inrush current, when being energized. This inrush current can have residual current components. The phenomenon is due to saturation of the transformer magnetic core during parts of the cycle. There is a risk that inrush current will give a residual current that reaches level above the operating current of the residual overcurrent protection. The inrush current has a large second harmonic content. This can be used to avoid unwanted operation of

the protection. Therefore, EF4PTOC has a possibility of second harmonic restrain *2ndHarmStab* if the level of this harmonic current reaches a value above a set percentage of the fundamental current.

7.2.3 Setting guidelines

The parameters for the four step residual overcurrent protection, zero or negative sequence direction EF4PTOC are set via the local HMI or PCM600.

The following settings can be done for the four step residual overcurrent protection.

GlobalBaseSel: Selects the global base value group used by the function to define (*IBase*), (*UBase*) and (*SBase*).

Operation: Sets the protection to *On* or *Off*.

EnaDir: Enables the directional calculation in addition to the directional mode selection in each step.

7.2.3.1 Settings for steps 1 and 4

n means step 1 and 4. *x* means step 1, 2, 3 and 4.

DirModex: The directional mode of step *x*. Possible settings are *Off*/*Non-directional*/*Forward*/*Reverse*.

Characteristx: Selection of time characteristic for step *x*. Definite time delay and different types of inverse time characteristics are available.

Inverse time characteristic enables fast fault clearance of high current faults at the same time as selectivity to other inverse time phase overcurrent protections can be assured. This is mainly used in radial fed networks but can also be used in meshed networks. In meshed networks the settings must be based on network fault calculations.

To assure selectivity between different protections, in the radial network, there have to be a minimum time difference Δt between the time delays of two protections. The minimum time difference can be determined for different cases. To determine the shortest possible time difference, the operation time of protections, breaker opening time and protection resetting time must be known. These time delays can vary significantly between different protective equipment. The following time delays can be estimated:

Protection operate time:	15-60 ms
Protection resetting time:	15-60 ms
Breaker opening time:	20-120 ms

The different characteristics are described in the Technical Manual (TM).

INx>: Operate residual current level for step *x* given in % of *IBase*.

kn: Time multiplier for the dependent (inverse) characteristic for step *n*.

IMinn: Minimum operate current for step *n* in % of *IBase*. Set *IMinn* below *INx*> for every step to achieve ANSI reset characteristic according to standard. If *IMinn* is set above *INx* for any step the ANSI reset works as if current is zero when current drops below *IMinn*.

tnMin: Minimum operating time for inverse time characteristics. At high currents the inverse time characteristic might give a very short operation time. By setting this parameter the operation time of the step *n* can never be shorter than the setting.

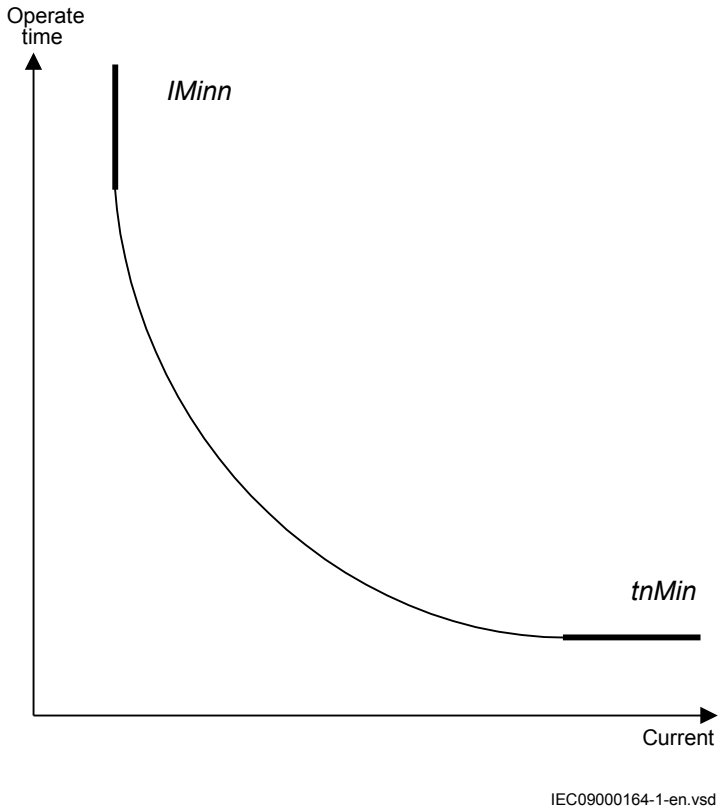

Figure 33: Minimum operate current and operate time for inverse time characteristics

In order to fully comply with curves definition the setting parameter *txMin* shall be set to the value which is equal to the operate time of the selected IEC inverse curve for measured current of twenty times the set current pickup value. Note that the operate time value is dependent on the selected setting value for time multiplier *kn*.

7.2.3.2 Common settings for all steps

tx: Definite time delay for step *x*. Used if definite time characteristic is chosen.

AngleRCA: Relay characteristic angle given in degree. This angle is defined as shown in figure 34. The angle is defined positive when the residual current lags the reference voltage (Upol = $3U_0$ or U_2)

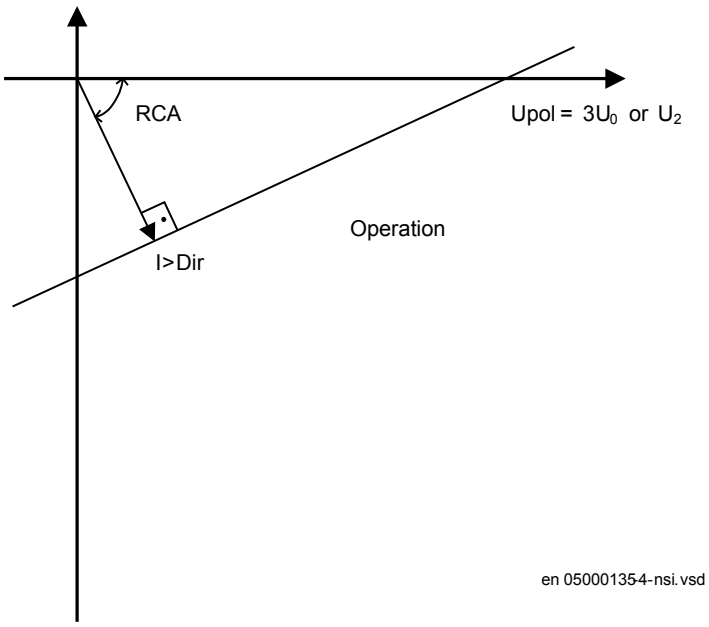

Figure 34: Relay characteristic angle given in degree

In a normal transmission network a normal value of RCA is about 65°. The setting range is -180° to +180°.

polMethod: Defines if the directional polarization is from

- *Voltage* ($3U_0$ or U_2)
- *Current* ($3I_0 \cdot$ ZNpol or $3I_2 \cdot$ZNpol where ZNpol is RNpol + jXNpol), or
- both currents and voltage, *Dual* (dual polarizing, ($3U_0 + 3I_0 \cdot$ ZNpol) or ($U_2 + I_2 \cdot$ ZNpol)).

Normally voltage polarizing from the internally calculated residual sum or an external open delta is used.

Current polarizing is useful when the local source is strong and a high sensitivity is required. In such cases the polarizing voltage ($3U_0$) can be below 1% and it is then necessary to use current polarizing or dual polarizing. Multiply the required set current (primary) with the minimum impedance (ZNpol) and check that the

percentage of the phase-to-earth voltage is definitely higher than 1% (minimum $3U_0$>*UPolMin* setting) as a verification.

RNPol, XNPol: The zero-sequence source is set in primary ohms as base for the current polarizing. The polarizing voltage is then achieved as $3I_0 \cdot$ ZNpol. The ZNpol can be defined as $(ZS_1-ZS_0)/3$, that is the earth return impedance of the source behind the protection. The maximum earth-fault current at the local source can be used to calculate the value of ZN as $U/(\sqrt{3} \cdot 3I_0)$ Typically, the minimum ZNPol (3 · zero sequence source) is set. Setting is in primary ohms.

When the dual polarizing method is used it is important that the product *INx*>· ZNpol is not greater than $3U_0$. If so, there is a risk for incorrect operation for faults in the reverse direction.

IPolMin: is the minimum earth-fault current accepted for directional evaluation. For smaller currents than this value the operation will be blocked. Typical setting is 5-10% of *IBase*.

UPolMin: Minimum polarization (reference) residual voltage for the directional function, given in % of *UBase*/√3.

I>Dir: Operate residual current release level in % of *IBase* for directional comparison scheme. The setting is given in % of *IBase* and must be set below the lowest *INx*> setting, set for the directional measurement. The output signals, STFW and STRV can be used in a teleprotection scheme. The appropriate signal should be configured to the communication scheme block.

7.2.3.3 2nd harmonic restrain

If a power transformer is energized there is a risk that the current transformer core will saturate during part of the period, resulting in a transformer inrush current. This will give a declining residual current in the network, as the inrush current is deviating between the phases. There is a risk that the residual overcurrent function will give an unwanted trip. The inrush current has a relatively large ratio of 2nd harmonic component. This component can be used to create a restrain signal to prevent this unwanted function.

At current transformer saturation a false residual current can be measured by the protection. Also here the 2nd harmonic restrain can prevent unwanted operation.

2ndHarmStab: The rate of 2nd harmonic current content for activation of the 2nd harmonic restrain signal. The setting is given in % of the fundamental frequency residual current.

HarmRestrainx: Enable block of step *x* from the harmonic restrain function.

7.3 Thermal overload protection, two time constants TRPTTR

7.3.1 Identification

Function description	IEC 61850 identification	IEC 60617 identification	ANSI/IEEE C37.2 device number
Thermal overload protection, two time constants	TRPTTR		49

7.3.2 Application

Transformers in the power system are designed for a certain maximum load current (power) level. If the current exceeds this level the losses will be higher than expected. As a consequence the temperature of the transformer will increase. If the temperature of the transformer reaches too high values the equipment might be damaged:

- The insulation within the transformer will experience forced ageing. As a consequence of this, the risk of internal phase-to-phase or phase-to-earth faults will increase.
- There might be hot spots within the transformer, which will degrade the paper insulation. It might also cause bubbling in the transformer oil.

In stressed situations in the power system it can be required to overload transformers for a limited time. This should be done without the above mentioned risks. The thermal overload protection provides information and makes temporary overloading of transformers possible.

The permissible load level of a power transformer is highly dependent on the cooling system of the transformer. There are two main principles:

- OA: The air is naturally circulated to the coolers without fans and the oil is naturally circulated without pumps.
- FOA: The coolers have fans to force air for cooling and pumps to force the circulation of the transformer oil.

The protection can have two sets of parameters, one for non-forced cooling and one for forced cooling. Both the permissive steady state loading level as well as the thermal time constant is influenced by the cooling system of the transformer. The two parameters sets can be activated by the binary input signal COOLING. This

can be used for transformers where forced cooling can be taken out of operation, for example at fan or pump faults.

The thermal overload protection estimates the internal heat content of the transformer (temperature) continuously. This estimation is made by using a thermal model of the transformer, which is based on current measurement.

If the heat content of the protected transformer reaches a set alarm level a signal can be given to the operator. Two alarm levels are available. This enables preventive actions in the power system to be taken before dangerous temperatures are reached. If the temperature continues to increase to the trip value, the protection initiates a trip of the protected transformer.

After tripping by the thermal overload protection, the transformer will cool down over time. There will be a time gap before the heat content (temperature) reaches such a level so that the transformer can be taken into service again. Therefore, the function will continue to estimate the heat content using a set cooling time constant. Energizing of the transformer can be blocked until the heat content has reached a set level.

7.3.3 Setting guideline

The parameters for the thermal overload protection, two time constants (TRPTTR) are set via the local HMI or through the Protection and Control Manager (PCM600).

The following settings can be done for the thermal overload protection:

GlobalBaseSel: Selects the global base value group used by the function to define (*IBase*), (*UBase*) and (*SBase*).

Operation: Sets the mode of operation. *Off* switches off the complete function.

IRef: Reference level of the current given in % of *IBase*. When the current is equal to *IRef* the final (steady state) heat content is equal to 1. It is suggested to give a setting corresponding to the rated current of the transformer winding. Transformer rated current / *IBase** 100%.

IBase1: Base current for setting given as percentage of *IBase*. This setting shall be related to the status with no COOLING input. It is suggested to give a setting corresponding to the rated current of the transformer with natural cooling (OA).

IBase2: Base current for setting given as percentage of *IBase*. This setting shall be related to the status with activated COOLING input. It is suggested to give a setting corresponding to the rated current of the transformer with forced cooling (FOA). If the transformer has no forced cooling *IBase2* can be set equal to *IBase1*.

Tau1: The thermal time constant of the protected transformer, related to *IBase1* (no cooling) given in minutes.

Tau2: The thermal time constant of the protected transformer, related to *IBase2* (with cooling) given in minutes.

The thermal time constant should be obtained from the transformer manufacturers manuals. The thermal time constant is dependent on the cooling and the amount of oil. Normal time constants for medium and large transformers (according to IEC 60076-7) are about 2.5 hours for naturally cooled transformers and 1.5 hours for forced cooled transformers.

The time constant can be estimated from measurements of the oil temperature during a cooling sequence (described in IEC 60076-7). It is assumed that the transformer is operated at a certain load level with a constant oil temperature (steady state operation). The oil temperature above the ambient temperature is $\Delta\Theta_{o0}$. Then the transformer is disconnected from the grid (no load). After a time t of at least 30 minutes the temperature of the oil is measured again. Now the oil temperature above the ambient temperature is $\Delta\Theta_{ot}$. The thermal time constant can now be estimated as:

$$\tau = \frac{t}{\ln \Delta\Theta_{o0} - \ln \Delta\Theta_{ot}}$$

(Equation 17)

If the transformer has forced cooling (FOA) the measurement should be made both with and without the forced cooling in operation, giving *Tau2* and *Tau1*.

The time constants can be changed if the current is higher than a set value or lower than a set value. If the current is high it is assumed that the forced cooling is activated while it is deactivated at low current. The setting of the parameters below enables automatic adjustment of the time constant.

Tau1High: Multiplication factor to adjust the time constant *Tau1* if the current is higher than the set value *IHighTau1*. *IHighTau1* is set in % of *IBase1*.

Tau1Low: Multiplication factor to adjust the time constant *Tau1* if the current is lower than the set value *ILowTau1*. *ILowTau1* is set in % of *IBase1*.

Tau2High: Multiplication factor to adjust the time constant *Tau2* if the current is higher than the set value *IHighTau2*. *IHighTau2* is set in % of *IBase2*.

Tau2Low: Multiplication factor to adjust the time constant *Tau2* if the current is lower than the set value *ILowTau2*. *ILowTau2* is set in % of *IBase2*.

The possibility to change time constant with the current value as the base can be useful in different applications. Below some examples are given:

- In case a total interruption (low current) of the protected transformer all cooling possibilities will be inactive. This can result in a changed value of the time constant.
- If other components (motors) are included in the thermal protection, there is a risk of overheating of that equipment in case of very high current. The thermal time constant is often smaller for a motor than for the transformer.

ITrip: The steady state current that the transformer can withstand. The setting is given in % of *IBase1* or *IBase2*.

Alarm1: Heat content level for activation of the signal ALARM1. ALARM1 is set in % of the trip heat content level.

Alarm2: Heat content level for activation of the output signal ALARM2. ALARM2 is set in % of the trip heat content level.

ResLo: Lockout release level of heat content to release the lockout signal. When the thermal overload protection trips a lock-out signal is activated. This signal is intended to block switching on of the protected circuit transformer as long as the transformer temperature is high. The signal is released when the estimated heat content is below the set value. This temperature value should be chosen below the alarm temperature. *ResLo* is set in % of the trip heat content level.

Warning: If the calculated time to trip factor is below the setting *Warning* a warning signal is activated. The setting is given in minutes.

7.4 Breaker failure protection 3-phase activation and output CCRBRF

7.4.1 Identification

Function description	IEC 61850 identification	IEC 60617 identification	ANSI/IEEE C37.2 device number
Breaker failure protection, 3-phase activation and output	CCRBRF	*3I>BF*	50BF

7.4.2 Application

In the design of the fault clearance system the N-1 criterion is often used. This means that a fault needs to be cleared even if any component in the fault clearance system is faulty. One necessary component in the fault clearance system is the circuit breaker. It is from practical and economical reason not feasible to duplicate the circuit breaker for the protected component. Instead a breaker failure protection is used.

Breaker failure protection, 3-phase activation and output (CCRBRF) will issue a back-up trip command to adjacent circuit breakers in case of failure to trip of the “normal” circuit breaker for the protected component. The detection of failure to break the current through the breaker is made by means of current measurement or as detection of remaining trip signal (unconditional).

CCRBRF can also give a re-trip. This means that a second trip signal is sent to the protected circuit breaker. The re-trip function can be used to increase the probability of operation of the breaker, or it can be used to avoid back-up trip of many breakers in case of mistakes during relay maintenance and test.

7.4.3 Setting guidelines

The parameters for Breaker failure protection 3-phase activation and output CCRBRF are set via the local HMI or PCM600.

The following settings can be done for the breaker failure protection.

GlobalBaseSel: Selects the global base value group used by the function to define (*IBase*), (*UBase*) and (*SBase*).

Operation: *Off*/*On*

FunctionMode This parameter can be set *Current* or *Contact*. This states the way the detection of failure of the breaker is performed. In the mode current the current measurement is used for the detection. In the mode *Contact* the long duration of breaker position signal is used as indicator of failure of the breaker. The mode *Current&Contact* means that both ways of detections are activated. *Contact* mode can be usable in applications where the fault current through the circuit breaker is small. This can be the case for some generator protection application (for example reverse power protection) or in case of line ends with weak end infeed.

RetripMode: This setting states how the re-trip function shall operate. *Retrip Off* means that the re-trip function is not activated. *CB Pos Check* (circuit breaker position check) and *Current* means that a phase current must be larger than the operate level to allow re-trip. *CB Pos Check* (circuit breaker position check) and *Contact* means re-trip is done when circuit breaker is closed (breaker position is used). *No CBPos Check* means re-trip is done without check of breaker position.

Table 13: Dependencies between parameters RetripMode and FunctionMode

RetripMode	*FunctionMode*	Description
Retrip Off	N/A	the re-trip function is not activated
CB Pos Check	*Current*	a phase current must be larger than the operate level to allow re-trip
	Contact	re-trip is done when breaker position indicates that breaker is still closed after re-trip time has elapsed
	Current&Contact	both methods are used
No CBPos Check	*Current*	re-trip is done without check of breaker position
	Contact	re-trip is done without check of breaker position
	Current&Contact	both methods are used

BuTripMode: Back-up trip mode is given to state sufficient current criteria to detect failure to break. For *Current* operation *2 out of 4* means that at least two currents, of the three-phase currents and the residual current, shall be high to indicate breaker failure. *1 out of 3* means that at least one current of the three-phase currents shall be high to indicate breaker failure. *1 out of 4* means that at least one current of the three-phase currents or the residual current shall be high to indicate breaker failure. In most applications *1 out of 3* is sufficient. For *Contact* operation means back-up trip is done when circuit breaker is closed (breaker position is used).

IP>: Current level for detection of breaker failure, set in % of *IBase*. This parameter should be set so that faults with small fault current can be detected. The setting can be chosen in accordance with the most sensitive protection function to start the breaker failure protection. Typical setting is 10% of *IBase*.

I>BlkCont: If any contact based detection of breaker failure is used this function can be blocked if any phase current is larger than this setting level. If the *FunctionMode* is set *Current&Contact* breaker failure for high current faults are safely detected by the current measurement function. To increase security the contact based function should be disabled for high currents. The setting can be given within the range 5 – 200% of *IBase*.

IN>: Residual current level for detection of breaker failure set in % of *IBase*. In high impedance earthed systems the residual current at phase- to-earth faults are normally much smaller than the short circuit currents. In order to detect breaker failure at single-phase-earth faults in these systems it is necessary to measure the residual current separately. Also in effectively earthed systems the setting of the earth-fault current protection can be chosen to relatively low current level. The *BuTripMode* is set *1 out of 4*. The current setting should be chosen in accordance to the setting of the sensitive earth-fault protection. The setting can be given within the range 2 – 200 % of *IBase*.

t1: Time delay of the re-trip. The setting can be given within the range 0 – 60s in steps of 0.001 s. Typical setting is 0 – 50ms.

t2: Time delay of the back-up trip. The choice of this setting is made as short as possible at the same time as unwanted operation must be avoided. Typical setting is 90 – 200ms (also dependent of re-trip timer).

The minimum time delay for the re-trip can be estimated as:

$$t2 \geq t1 + t_{cbopen} + t_{BFP_reset} + t_{margin}$$

(Equation 18)

where:

t_{cbopen}	is the maximum opening time for the circuit breaker
t_{BFP_reset}	is the maximum time for breaker failure protection to detect correct breaker function (the current criteria reset)
t_{margin}	is a safety margin

It is often required that the total fault clearance time shall be less than a given critical time. This time is often dependent of the ability to maintain transient stability in case of a fault close to a power plant.

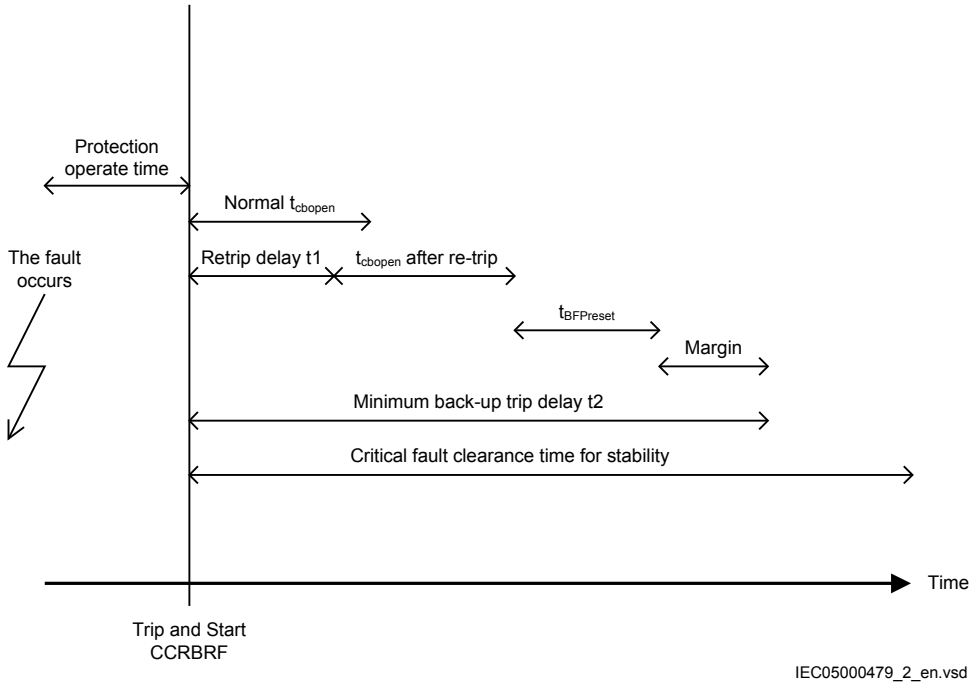

Figure 35: Time sequence

7.5 Pole discordance protection CCRPLD

7.5.1 Identification

Function description	IEC 61850 identification	IEC 60617 identification	ANSI/IEEE C37.2 device number
Pole discordance protection	CCRPLD	PD	52PD

7.5.2 Application

There is a risk that a circuit breaker will get discordance between the poles at circuit breaker operation: closing or opening. One pole can be open and the other two closed, or two poles can be open and one closed. Pole discordance of a circuit

breaker will cause unsymmetrical currents in the power system. The consequence of this can be:

- Negative sequence currents that will give stress on rotating machines
- Zero sequence currents that might give unwanted operation of sensitive earth-fault protections in the power system.

It is therefore important to detect situations with pole discordance of circuit breakers. When this is detected the breaker should be tripped directly.

Pole discordance protection CCRPLD will detect situation with deviating positions of the poles of the protected circuit breaker. The protection has two different options to make this detection:

- By connecting the auxiliary contacts in the circuit breaker so that logic is created and a signal can be sent to the pole discordance protection, indicating pole discordance.
- Each phase current through the circuit breaker is measured. If the difference between the phase currents is larger than a *CurrUnsymLevel* this is an indication of pole discordance, and the protection will operate.

7.5.3 Setting guidelines

The parameters for the Pole discordance protection CCRPLD are set via the local HMI or PCM600.

The following settings can be done for the pole discordance protection.

GlobalBaseSel: Selects the global base value group used by the function to define (*IBase*), (*UBase*) and (*SBase*).

Operation: *Off* or *On*

tTrip: Time delay of the operation.

ContSel: Operation of the contact based pole discordance protection. Can be set: *Off*/*PD signal from CB*. If *PD signal from CB* is chosen the logic to detect pole discordance is made in the vicinity to the breaker auxiliary contacts and only one signal is connected to the pole discordance function.

CurrSel: Operation of the current based pole discordance protection. Can be set: *Off*/*CB oper monitor*/*Continuous monitor*. In the alternative *CB oper monitor* the function is activated only directly in connection to breaker open or close command (during 200 ms). In the alternative *Continuous monitor* function is continuously activated.

CurrUnsymLevel: Unsymmetrical magnitude of lowest phase current compared to the highest, set in % of the highest phase current.

CurrRelLevel: Current magnitude for release of the function in % of *IBase*.

7.6 Negative sequence based overcurrent function DNSPTOC

7.6.1 Identification

Function description	IEC 61850 identification	IEC 60617 identification	ANSI/IEEE C37.2 device number
Negative sequence based overcurrent function	DNSPTOC	*3I2>*	46

7.6.2 Application

Negative sequence based overcurrent function (DNSPTOC) is typically used as sensitive earth-fault protection of power lines, where incorrect zero sequence polarization may result from mutual induction between two or more parallel lines.

Additionally, it is applied in applications on cables, where zero sequence impedance depends on the fault current return paths, but the cable negative sequence impedance is practically constant.

The directional function is current and voltage polarized. The function can be set to forward, reverse or non-directional independently for each step.

DNSPTOC protects against all unbalanced faults including phase-to-phase faults. The minimum start current of the function must be set to above the normal system unbalance level in order to avoid unwanted operation.

7.6.3 Setting guidelines

Below is an example of Negative sequence based overcurrent function (DNSPTOC) used as a sensitive earth-fault protection for power lines. The following settings must be done in order to ensure proper operation of the protection:

GlobalBaseSel: Selects the global base value group used by the function to define (*IBase*), (*UBase*) and (*SBase*).

- setting *RCADir* to value *+65 degrees*, that is, the negative sequence current typically lags the inverted negative sequence voltage for this angle during the fault
- setting *ROADir* to value *90 degrees*
- setting *LowVolt_VM* to value *2%*, that is, the negative sequence voltage level above which the directional element will be enabled
- setting *Operation_OC1* to *On*
- setting *StartCurr_OC1* to value between *3-10%*, (typical values)

- setting *tDef_OC1* to insure proper time coordination with other earth-fault protections installed in the vicinity of this power line
- setting *DirMode_OC1* to *Forward*
- setting *DirPrinc_OC1* to *IcosPhi&U*
- setting *ActLowVolt1_VM* to *Block*

DNSPTOC is used in directional comparison protection scheme for the power line protection, when communication channels to the remote end of this power line are available. In that case, two negative sequence overcurrent steps are required - one in forward and another in reverse direction. The OC1 stage is used to detect faults in forward direction and the OC2 stage is used to detect faults in reverse direction.

However, the following must be noted for such application:

- setting *RCADir* and *ROADir* are applicable for both steps OC1 and OC2
- setting *DirMode_OC1* must be set to *Forward*
- setting *DirMode_OC2* must be set to *Reverse*
- setting *StartCurr_OC2* must be made more sensitive than *pickup* value of the forward OC1 element, that is, typically 60% of *StartCurr_OC1* set pickup level in order to insure proper operation of the directional comparison scheme during current reversal situations
- the start signals STOC1 and STOC2 from OC1 and OC2 elements is used to send forward and reverse signals to the remote end of the power line
- the available scheme communications function block within IED is used between the protection function and the teleprotection communication equipment, in order to insure proper conditioning of the above two start signals.

ActLowVolt1 and *ActLowVolt2* should not be set to *Memory*.

Section 8 Voltage protection

8.1 Two step undervoltage protection UV2PTUV

8.1.1 Identification

Function description	IEC 61850 identification	IEC 60617 identification	ANSI/IEEE C37.2 device number
Two step undervoltage protection	UV2PTUV	*2U<*	27

8.1.2 Application

Two-step undervoltage protection function (UV2PTUV) is applicable in all situations, where reliable detection of low phase voltages is necessary. It is used also as a supervision and fault detection function for other protection functions, to increase the security of a complete protection system.

UV2PTUV is applied to power system elements, such as generators, transformers, motors and power lines in order to detect low voltage conditions. Low voltage conditions are caused by abnormal operation or fault in the power system. UV2PTUV is used in combination with overcurrent protections, either as restraint or in logic "and gates" of the trip signals issued by the two functions. Other applications are the detection of "no voltage" condition, for example, before the energization of a HV line or for automatic breaker trip in case of a blackout. UV2PTUV is also used to initiate voltage correction measures, like insertion of shunt capacitor banks to compensate for reactive load and thereby increasing the voltage. The function has a high measuring accuracy to allow applications to control reactive load.

UV2PTUV is used to disconnect apparatuses, like electric motors, which will be damaged when subject to service under low voltage conditions. UV2PTUV deals with low voltage conditions at power system frequency, which can be caused by the following reasons:

1. Malfunctioning of a voltage regulator or wrong settings under manual control (symmetrical voltage decrease).
2. Overload (symmetrical voltage decrease).
3. Short circuits, often as phase-to-earth faults (unsymmetrical voltage decrease).

UV2PTUV prevents sensitive equipment from running under conditions that could cause their overheating and thus shorten their life time expectancy. In many cases, it is a useful function in circuits for local or remote automation processes in the power system.

8.1.3 Setting guidelines

All the voltage conditions in the system where UV2PTUV performs its functions should be considered. The same also applies to the associated equipment, its voltage and time characteristic.

There is a very wide application area where general undervoltage functions are used. All voltage related settings are made as a percentage of the global settings base voltage *UBase*, which normally is set to the primary rated voltage level (phase-to-phase) of the power system or the high voltage equipment under consideration.

The setting for UV2PTUV is normally not critical, since there must be enough time available for the main protection to clear short circuits and earth faults.

Some applications and related setting guidelines for the voltage level are described in the following sections.

8.1.3.1 Equipment protection, such as for motors and generators

The setting must be below the lowest occurring "normal" voltage and above the lowest acceptable voltage for the equipment.

8.1.3.2 Disconnected equipment detection

The setting must be below the lowest occurring "normal" voltage and above the highest occurring voltage, caused by inductive or capacitive coupling, when the equipment is disconnected.

8.1.3.3 Power supply quality

The setting must be below the lowest occurring "normal" voltage and above the lowest acceptable voltage, due to regulation, good practice or other agreements.

8.1.3.4 Voltage instability mitigation

This setting is very much dependent on the power system characteristics, and thorough studies have to be made to find the suitable levels.

8.1.3.5 Backup protection for power system faults

The setting must be below the lowest occurring "normal" voltage and above the highest occurring voltage during the fault conditions under consideration.

8.1.3.6 Settings for Two step undervoltage protection

The following settings can be done for two step undervoltage protection (UV2PTUV).

GlobalBaseSel: Selects the global base value group used by the function to define (*IBase*), (*UBase*) and (*SBase*).

ConnType: Sets whether the measurement shall be phase-to-earth fundamental value, phase-to-phase fundamental value, phase-to-earth RMS value or phase-to-phase RMS value.

Operation: *Off/On*.

UV2PTUV measures selectively phase-to-earth voltages, or phase-to-phase voltage chosen by the setting *ConnType*.

This means operation for phase-to-earth voltage if:

$$U < (\%) \cdot UBase(kV) \Big/ \sqrt{3}$$

(Equation 19)

and operation for phase-to-phase voltage if:

$$\mathrm{U} < (\%) \cdot \mathrm{UBase(kV)}$$

(Equation 20)

Characteristic1: This parameter gives the type of time delay to be used for step 1. The setting can be. *Definite time/Inverse Curve A/Inverse Curve B*. The choice is highly dependent of the protection application.

OpModen: This parameter describes how many of the three measured voltages that should be below the set level to give operation for step *n* (*n*=step 1 and 2). The setting can be *1 out of 3*, *2 out of 3* or *3 out of 3*. It is sufficient that one phase voltage is low to give operation. If the function shall be insensitive for single phase-to-earth faults *2 out of 3* can be chosen.

Un<: Set undervoltage operation value for step *n* (*n*=step 1 and 2), given as % of the global parameter *UBase*. This setting is highly dependent of the protection application. Here it is essential to consider the minimum voltage at non-faulted situations. This voltage is larger than 90% of nominal voltage.

tn: Time delay for step *n* (*n*=step 1 and 2), given in s. This setting is highly dependent of the protection application. In many applications the protection function does not directly trip where there is short circuit or earth faults in the system. The time delay must be coordinated to the short circuit protection.

t1Min: Minimum operating time for inverse time characteristic for step 1, given in s. When using inverse time characteristic for the undervoltage function during very low voltages can give a short operation time. This might lead to unselective trip.

By setting *t1Min* longer than the operation time for other protections such unselective tripping can be avoided.

k1: Time multiplier for inverse time characteristic. This parameter is used for coordination between different inverse time delayed undervoltage protections.

The function must be externally blocked when the protected object is disconnected.

8.2 Two step overvoltage protection OV2PTOV

8.2.1 Identification

Function description	IEC 61850 identification	IEC 60617 identification	ANSI/IEEE C37.2 device number
Two step overvoltage protection	OV2PTOV	2U>	59

8.2.2 Application

Two step overvoltage protection OV2PTOV is applicable in all situations, where reliable detection of high voltage is necessary. OV2PTOV is used for supervision and detection of abnormal conditions, which, in combination with other protection functions, increase the security of a complete protection system.

High overvoltage conditions are caused by abnormal situations in the power system. OV2PTOV is applied to power system elements, such as generators, transformers, motors and power lines in order to detect high voltage conditions. OV2PTOV is used in combination with low current signals, to identify a transmission line, open in the remote end. In addition to that, OV2PTOV is also used to initiate voltage correction measures, like insertion of shunt reactors, to compensate for low load, and thereby decreasing the voltage. The function has a high measuring accuracy and hysteresis setting to allow applications to control reactive load.

OV2PTOV is used to disconnect apparatuses, like electric motors, which will be damaged when subject to service under high voltage conditions. It deals with high voltage conditions at power system frequency, which can be caused by:

1. Different kinds of faults, where a too high voltage appears in a certain power system, like metallic connection to a higher voltage level (broken conductor

falling down to a crossing overhead line, transformer flash over fault from the high voltage winding to the low voltage winding and so on).
2. Malfunctioning of a voltage regulator or wrong settings under manual control (symmetrical voltage decrease).
3. Low load compared to the reactive power generation (symmetrical voltage decrease).
4. Earth-faults in high impedance earthed systems causes, beside the high voltage in the neutral, high voltages in the two non-faulted phases, (unsymmetrical voltage increase).

OV2PTOV prevents sensitive equipment from running under conditions that could cause their overheating or stress of insulation material, and, thus, shorten their life time expectancy. In many cases, it is a useful function in circuits for local or remote automation processes in the power system.

8.2.3 Setting guidelines

The parameters for Two step overvoltage protection (OV2PTOV) are set via the local HMI or PCM600.

All the voltage conditions in the system where OV2PTOV performs its functions should be considered. The same also applies to the associated equipment, its voltage and time characteristic.

There is a very wide application area where general overvoltage functions are used. All voltage related settings are made as a percentage of a settable base primary voltage, which normally is set to the nominal voltage level (phase-to-phase) of the power system or the high voltage equipment under consideration.

The time delay for the OV2PTOV can sometimes be critical and related to the size of the overvoltage - a power system or a high voltage component can withstand smaller overvoltages for some time, but in case of large overvoltages the related equipment should be disconnected more rapidly.

Some applications and related setting guidelines for the voltage level are given below:

Equipment protection, such as for motors, generators, reactors and transformers

High voltage can cause overexcitation of the core and deteriorate the winding insulation. The setting must be above the highest occurring "normal" voltage and below the highest acceptable voltage for the equipment.

Equipment protection, capacitors

High voltage can deteriorate the dielectricum and the insulation. The setting must be above the highest occurring "normal" voltage and below the highest acceptable voltage for the capacitor.

High impedance earthed systems

In high impedance earthed systems, earth-faults cause a voltage increase in the non-faulty phases. OV2PTOV can be used to detect such faults. The setting must be above the highest occurring "normal" voltage and below the lowest occurring voltage during faults. A metallic single-phase earth-fault causes the non-faulted phase voltages to increase a factor of √3.

The following settings can be done for Two step overvoltage protection

GlobalBaseSel: Selects the global base value group used by the function to define (*IBase*), (*UBase*) and (*SBase*).

ConnType: Sets whether the measurement shall be phase-to-earth fundamental value, phase-to-phase fundamental value, phase-to-earth RMS value or phase-to-phase RMS value.

Operation: Off/On .

OV2PTOV measures the phase-to-earth voltages, or phase-to-phase voltages as selected. The function will operate if the voltage gets higher than the set percentage of the global set base voltage *UBase*. This means operation for phase-to-earth voltage over:

$$U > (\%) \cdot \frac{UBase(kV)}{\sqrt{3}}$$

(Equation 21)

and operation for phase-to-phase voltage over:

$$U > (\%) \cdot UBase(kV)$$

(Equation 22)

Characteristic1: This parameter gives the type of time delay to be used. The setting can be. *Definite time/Inverse Curve A/Inverse Curve B/Inverse Curve C*. The choice is highly dependent of the protection application.

OpModen: This parameter describes how many of the three measured voltages that should be above the set level to give operation for step n (n=step 1 and 2). The setting can be *1 out of 3, 2 out of 3 or 3 out of 3*. In most applications it is sufficient that one phase voltage is high to give operation. If the function shall be insensitive for single phase-to-earth faults *3 out of 3* can be chosen, because the voltage will normally rise in the non-faulted phases at single phase-to-earth faults.

Un>: Set overvoltage operating value for step n (n=step 1 and 2), given as % of the global parameter *UBase*. The setting is highly dependent of the protection application. Here it is essential to consider the Maximum voltage at non-faulted situations. Normally this voltage is less than 110% of nominal voltage.

tn: time delay for step n (n=step 1 and 2), given in s. The setting is highly dependent of the protection application. In many applications the protection

function has the task to prevent damages to the protected object. The speed might be important for example in case of protection of transformer that might be overexcited. The time delay must be co-ordinated with other automated actions in the system.

t1Min: Minimum operating time for inverse time characteristic for step 1, given in s. For very high voltages the overvoltage function, using inverse time characteristic, can give very short operation time. This might lead to unselective trip. By setting *t1Min* longer than the operation time for other protections such unselective tripping can be avoided.

k1: Time multiplier for inverse time characteristic. This parameter is used for co-ordination between different inverse time delayed undervoltage protections.

8.3 Two step residual overvoltage protection ROV2PTOV

8.3.1 Identification

Function description	IEC 61850 identification	IEC 60617 identification	ANSI/IEEE C37.2 device number
Two step residual overvoltage protection	ROV2PTOV	*3U0>*	59N

8.3.2 Application

Two step residual overvoltage protection ROV2PTOV is primarily used in high impedance earthed distribution networks, mainly as a backup for the primary earth-fault protection of the feeders and the transformer. To increase the security for different earth-fault related functions, the residual overvoltage signal can be used as a release signal. The residual voltage can be measured either at the transformer neutral or from a voltage transformer open delta connection. The residual voltage can also be calculated internally, based on measurement of the three-phase voltages.

In high impedance earthed systems the residual voltage will increase in case of any fault connected to earth. Depending on the type of fault and fault resistance the residual voltage will reach different values. The highest residual voltage, equal to three times the phase-to-earth voltage, is achieved for a single phase-to-earth fault. The residual voltage increases approximately to the same level in the whole system and does not provide any guidance in finding the faulted component. Therefore, ROV2PTOV is often used as a backup protection or as a release signal for the feeder earth-fault protection.

8.3.3 Setting guidelines

All the voltage conditions in the system where ROV2PTOV performs its functions should be considered. The same also applies to the associated equipment, its voltage and time characteristic.

There is a very wide application area where general single input or residual overvoltage functions are used. All voltage related settings are made as a percentage of a settable base voltage, which can be set to the primary nominal voltage (phase-phase) level of the power system or the high voltage equipment under consideration.

The time delay for ROV2PTOV are seldom critical, since residual voltage is related to earth-faults in a high impedance earthed system, and enough time must normally be given for the primary protection to clear the fault. In some more specific situations, where the single overvoltage protection is used to protect some specific equipment, the time delay is shorter.

Some applications and related setting guidelines for the residual voltage level are given below.

8.3.3.1 Power supply quality

The setting must be above the highest occurring "normal" residual voltage and below the highest acceptable residual voltage, due to regulation, good practice or other agreements.

8.3.3.2 High impedance earthed systems

In high impedance earthed systems, earth faults cause a neutral voltage in the feeding transformer neutral. Two step residual overvoltage protection ROV2PTOV is used to trip the transformer, as a backup protection for the feeder earth-fault protection, and as a backup for the transformer primary earth-fault protection. The setting must be above the highest occurring "normal" residual voltage, and below the lowest occurring residual voltage during the faults under consideration. A metallic single-phase earth fault causes a transformer neutral to reach a voltage equal to the nominal phase-to-earth voltage.

The voltage transformers measuring the phase-to-earth voltages measure zero voltage in the faulty phase. The two healthy phases will measure full phase-to-phase voltage, as the earth is available on the faulty phase and the neutral has a full phase-to-earth voltage. The residual overvoltage will be three times the phase-to-earth voltage. See Figure 36.

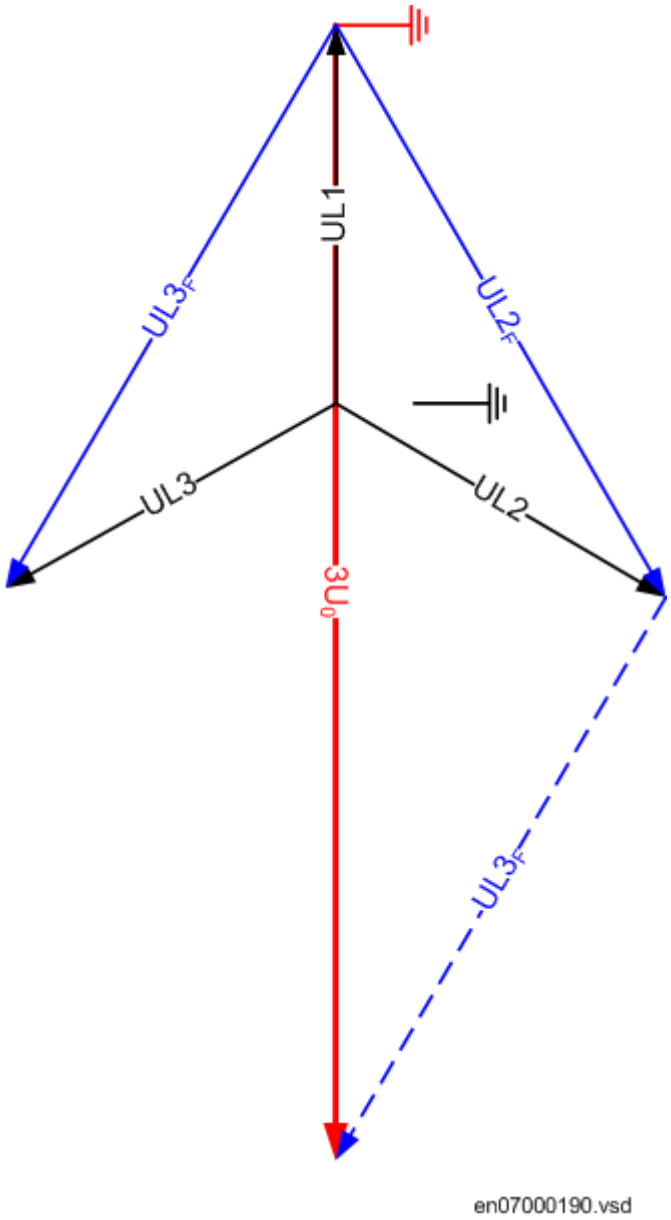

Figure 36: Earth fault in Non-effectively earthed systems

8.3.3.3 Direct earthed system

In direct earthed systems, an earth-fault on one phase indicates a voltage collapse in that phase. The two healthy phases will have normal phase-to-earth voltages. The residual sum will have the same value as phase-to-earth voltage. See Figure 37.

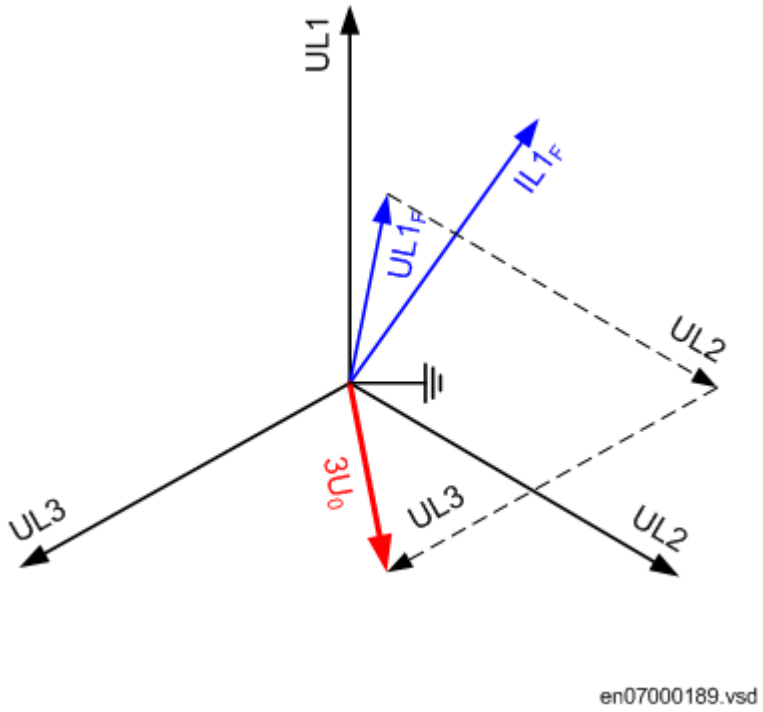

Figure 37: Earth fault in Direct earthed system

8.3.3.4 Settings for Two step residual overvoltage protection

GlobalBaseSel: Selects the global base value group used by the function to define (*IBase*), (*UBase*) and (*SBase*).

Operation: *Off* or *On*

UBase is used as voltage reference for the voltage. The voltage can be fed to the IED in different ways:

1. The IED is fed from a normal voltage transformer group where the residual voltage is created from the phase-to-earth voltages within the protection software.
2. The IED is fed from a broken delta connection normal voltage transformer group. In a open delta connection the protection is fed by the voltage 3U0 (single input). The setting chapter in the application manual explains how the analog input needs to be set.
3. The IED is fed from a single voltage transformer connected to the neutral point of a power transformer in the power system. In this connection the protection is fed by the voltage UN=U0 (single input). The setting chapter in the application manual explains how the analog input needs to be set. ROV2PTOV will measure the residual voltage corresponding nominal phase-to-earth voltage for high impedance earthed system. The measurement will be based on the neutral voltage displacement .

Characteristic1: This parameter gives the type of time delay to be used. The setting can be, *Definite time* or *Inverse curve A* or *Inverse curve B* or *Inverse curve C*. The choice is highly dependent of the protection application.

Un>: Set overvoltage operate value for step *n* (*n*=step 1 and 2), given as % of residual voltage corresponding to global set parameter *UBase*:

$$U > (\%) \cdot UBase(kV) / \sqrt{3}$$

The setting is dependent of the required sensitivity of the protection and the system earthing. In non-effectively earthed systems the residual voltage can be maximum the rated phase-to-earth voltage, which should correspond to 100%.

In effectively earthed systems this value is dependent of the ratio Z0/Z1. The required setting to detect high resistive earth-faults must be based on network calculations.

tn: time delay of step *n* (*n*=step 1 and 2), given in s. The setting is highly dependent of the protection application. In many applications, the protection function has the task to prevent damages to the protected object. The speed might be important for example in case of protection of transformer that might be overexcited. The time delay must be co-ordinated with other automated actions in the system.

t1Min: Minimum operate time for inverse time characteristic for step 1, given in s. For very high voltages the overvoltage function, using inverse time characteristic, can give very short operation time. This might lead to unselective trip. By setting *t1Min* longer than the operation time for other protections such unselective tripping can be avoided.

k1: Time multiplier for inverse time characteristic. This parameter is used for co-ordination between different inverse time delayed undervoltage protections.

Section 9 Secondary system supervision

9.1 Fuse failure supervision SDDRFUF

9.1.1 Identification

Function description	IEC 61850 identification	IEC 60617 identification	ANSI/IEEE C37.2 device number
Fuse failure supervision	SDDRFUF	-	-

9.1.2 Application

Different protection functions within the protection IED, operates on the basis of the measured voltage in the relay point. Examples are:

- distance protection function
- under/over-voltage function
- synchrocheck function and voltage check for the weak infeed logic.

These functions can operate unintentionally if a fault occurs in the secondary circuits between the voltage instrument transformers and the IED.

It is possible to use different measures to prevent such unwanted operations. Miniature circuit breakers in the voltage measuring circuits, located as close as possible to the voltage instrument transformers, are one of them. Separate fuse-failure monitoring IEDs or elements within the protection and monitoring devices are another possibilities. These solutions are combined to get the best possible effect in the fuse failure supervision function (SDDRFUF).

SDDRFUF function built into the IED products can operate on the basis of external binary signals from the miniature circuit breaker or from the line disconnector. The first case influences the operation of all voltage-dependent functions while the second one does not affect the impedance measuring functions.

The negative sequence detection algorithm, based on the negative-sequence measuring quantities, a high value of voltage $3U_2$ without the presence of the negative-sequence current $3I_2$, is recommended for use in isolated or high-impedance earthed networks.

The zero sequence detection algorithm, based on the zero sequence measuring quantities, a high value of voltage $3U_0$ without the presence of the residual current $3I_0$, is recommended for use in directly or low impedance earthed networks. In

cases where the line can have a weak-infeed of zero sequence current this function shall be avoided.

A criterion based on delta current and delta voltage measurements can be added to the fuse failure supervision function in order to detect a three phase fuse failure. This is beneficial for example during three phase transformer switching.

9.1.3 Setting guidelines

9.1.3.1 General

The negative and zero sequence voltages and currents always exist due to different non-symmetries in the primary system and differences in the current and voltage instrument transformers. The minimum value for the operation of the current and voltage measuring elements must always be set with a safety margin of 10 to 20%, depending on the system operating conditions.

Pay special attention to the dissymmetry of the measuring quantities when the function is used on longer untransposed lines, on multicircuit lines and so on.

The settings of negative sequence, zero sequence and delta algorithm are in percent of the base voltage and base current for the function, *UBase* and *IBase* respectively. Set *UBase* to the primary rated phase-phase voltage of the potential voltage transformer and *IBase* to the primary rated current of the current transformer.

9.1.3.2 Setting of common parameters

GlobalBaseSel: Selects the global base value group used by the function to define (*IBase*), (*UBase*) and (*SBase*).

The settings of negative sequence, zero sequence and delta algorithm are in percent of the global base voltage and global base current for the function, *UBase* and *IBase* respectively.

The voltage threshold *USealIn*< is used to identify low voltage condition in the system. Set *USealIn*< below the minimum operating voltage that might occur during emergency conditions. We propose a setting of approximately 70% of the global parameter *UBase*.

The drop off time of 200 ms for dead phase detection makes it recommended to always set *SealIn* to *On* since this will secure a fuse failure indication at persistent fuse fail when closing the local breaker when the line is already energized from the other end. When the remote breaker closes the voltage will return except in the phase that has a persistent fuse fail. Since the local breaker is open there is no current and the dead phase indication will persist in the phase with the blown fuse. When the local breaker closes the current will start to flow and the function detects the fuse failure situation. But due to the 200 ms drop off timer the output BLKZ will not be activated until after 200 ms. This means that distance functions are not blocked and due to the “no voltage but current” situation might issue a trip.

The operation mode selector *OpMode* has been introduced for better adaptation to system requirements. The mode selector makes it possible to select interactions between the negative sequence and zero sequence algorithm. In normal applications the *OpMode* is set to either *UNsINs* for selecting negative sequence algorithm or *UZsIZs* for zero sequence based algorithm. If system studies or field experiences shows that there is a risk that the fuse failure function will not be activated due to the system conditions, the dependability of the fuse failure function can be increased if the *OpMode* is set to *UZsIZs OR UNsINs* or *OptimZsNs*. In mode *UZsIZs OR UNsINs* both the negative and zero sequence based algorithm is activated and working in an OR-condition. Also in mode *OptimZsNs* both the negative and zero sequence algorithm are activated and the one that has the highest magnitude of measured negative sequence current will operate. If there is a requirement to increase the security of the fuse failure function *OpMode* can be selected to *UZsIZs AND UNsINs* which gives that both negative and zero sequence algorithm is activated working in an AND-condition, that is, both algorithm must give condition for block in order to activate the output signals BLKU or BLKZ.

9.1.3.3 Negative sequence based

The relay setting value *3U2>* is given in percentage of the base voltage *UBase* and should not be set lower than according to equation 23.

$$3U2 >= \frac{3U2}{UBase} \cdot 100$$

(Equation 23)

where:

3U2 is maximal negative sequence voltage during normal operation condition

UBase is setting of the global base voltage for all functions in the IED.

The setting of the current limit *3I2<* is in percentage of global parameter *IBase*. The setting of *3I2<* must be higher than the normal unbalance current that might exist in the system and can be calculated according to equation 24.

$$3I2 <= \frac{3I2}{IBase} \cdot 100$$

(Equation 24)

where:

3I2 is maximal negative sequence current during normal operating condition

IBase is setting of base current for the function

9.1.3.4 Zero sequence based

The relay setting value *3U0>* is given in percentage of the global parameter *UBase*. The setting of *3U0>* should not be set lower than according to equation 25.

$$3U0 >= \frac{3U0}{UBase} \cdot 100$$

(Equation 25)

where:

3U0 is maximal zero sequence voltage during normal operation condition

UBase is setting of global base voltage all functions in the IED.

The setting of the current limit *3I0<* is done in percentage of the global parameter *IBase*. The setting of *3I0<* must be higher than the normal unbalance current that might exist in the system. The setting can be calculated according to equation 26.

$$3I0 <= \frac{3I0}{IBase} \cdot 100$$

(Equation 26)

where:

3I0< is maximal zero sequence current during normal operating condition

IBase is setting of global base current all functions in the IED.

9.1.3.5 Delta U and delta I

Set the operation mode selector *OpDUDI* to *On* if the delta function shall be in operation.

The setting of *DU>* should be set high (approximately 60% of *UBase*) and the current threshold *DI<* low (approximately 10% of *IBase*) to avoid unwanted operation due to normal switching conditions in the network. The delta current and delta voltage function shall always be used together with either the negative or zero sequence algorithm. If *USetprim* is the primary voltage for operation of dU/dt and *ISetprim* the primary current for operation of dI/dt, the setting of *DU>* and *DI<* will be given according to equation 27 and equation 28.

$$\mathrm{DU} >= \frac{\mathrm{USet_{prim}}}{\mathrm{UBase}} \cdot 100$$

(Equation 27)

$$DI <= \frac{ISetprim}{IBase} \cdot 100$$

(Equation 28)

The voltage thresholds *UPh>* is used to identify low voltage condition in the system. Set *UPh>* below the minimum operating voltage that might occur during emergency conditions. We propose a setting of approximately 70% of *UB*.

The current threshold *IPh>* shall be set lower than the *IMinOp* for the distance protection function. A 5-10% lower value is recommended.

9.1.3.6 Dead line detection

The condition for operation of the dead line detection is set by the parameters *IDLD<* for the current threshold and *UDLD<* for the voltage threshold.

Set the *IDLD<* with a sufficient margin below the minimum expected load current. A safety margin of at least 15-20% is recommended. The operate value must however exceed the maximum charging current of an overhead line, when only one phase is disconnected (mutual coupling to the other phases).

Set the *UDLD<* with a sufficient margin below the minimum expected operating voltage. A safety margin of at least 15% is recommended.

9.2 Breaker close/trip circuit monitoring TCSSCBR

9.2.1 Identification

Function description	IEC 61850 identification	IEC 60617 identification	ANSI/IEEE C37.2 device number
Breaker close/trip circuit monitoring	TCSSCBR	-	-

9.2.2 Application

TCSSCBR detects faults in the electrical control circuit of the circuit breaker. The function can supervise both open and closed coil circuits. This kind of supervision is necessary to find out the vitality of the control circuits continuously.

Trip circuit supervision generates a current of approximately 1.0 mA through the supervised circuit. It must be ensured that this current will not cause a latch up of the controlled object.

To protect the trip circuit supervision circuits in the IED, the output contacts are provided with parallel transient voltage suppressors. The breakdown voltage of these suppressors is 400 +/– 20 V DC.

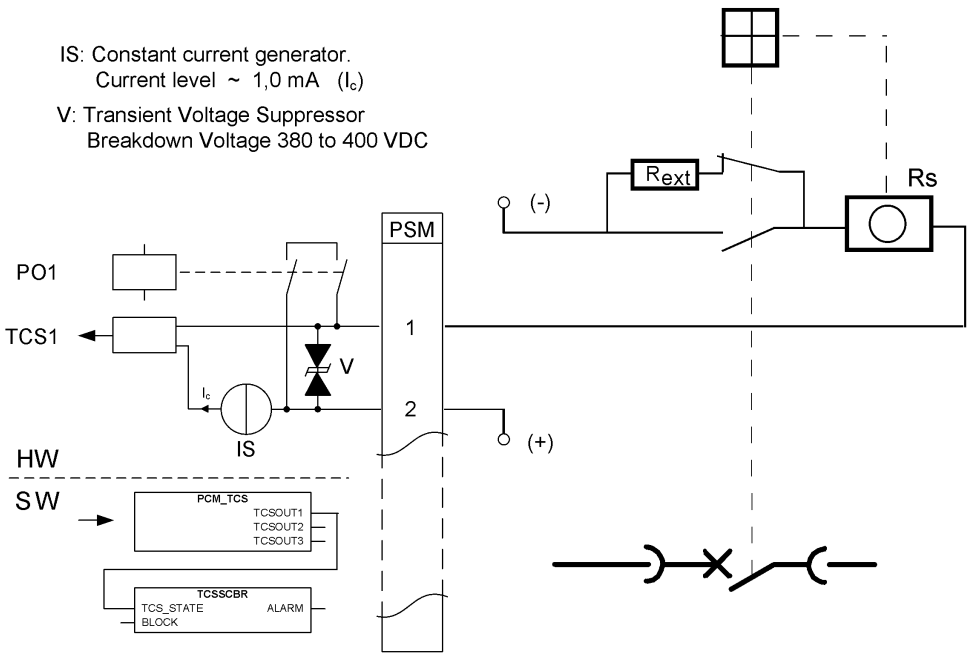

Figure 38: Operating principle of the trip-circuit supervision with an external resistor. The TCSSCBR blocking switch is not required since the external resistor is used.

If TCS is required only in a closed position, the external shunt resistance can be omitted. When the circuit breaker is in the open position, TCS sees the situation as a faulty circuit. One way to avoid TCS operation in this situation would be to block the supervision function whenever the circuit breaker is open.

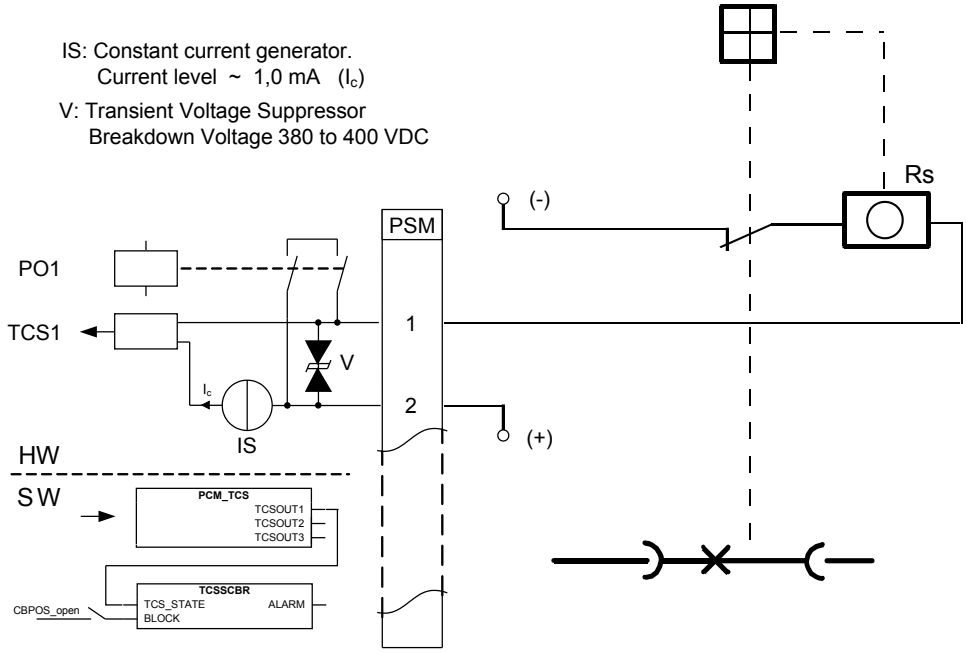

Figure 39: Operating principle of the trip-circuit supervision without an external resistor. The circuit breaker open indication is set to block TCSSCBR when the circuit breaker is open.

Trip-circuit supervision and other trip contacts

It is typical that the trip circuit contains more than one trip contact in parallel, for example in transformer feeders where the trip of a Buchholz relay is connected in parallel with the feeder terminal and other relays involved.

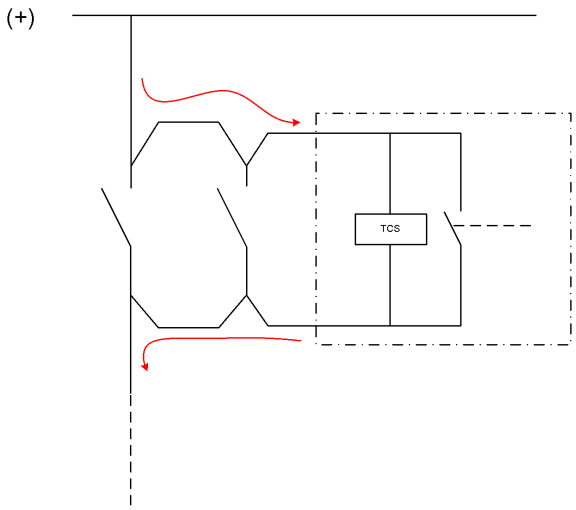

Figure 40: Constant test current flow in parallel trip contacts and trip-circuit supervision

Several trip-circuit supervision functions parallel in circuit

Not only the trip circuit often have parallel trip contacts, it is also possible that the circuit has multiple TCS circuits in parallel. Each TCS circuit causes its own supervising current to flow through the monitored coil and the actual coil current is a sum of all TCS currents. This must be taken into consideration when determining the resistance of R_{ext}.

Trip-circuit supervision with auxiliary relays

Many retrofit projects are carried out partially, that is, the old electromechanical relays are replaced with new ones but the circuit breaker is not replaced. This creates a problem that the coil current of an old type circuit breaker can be too high for the protection IED trip contact to break.

The circuit breaker coil current is normally cut by an internal contact of the circuit breaker. In case of a circuit breaker failure, there is a risk that the protection IED trip contact is destroyed since the contact is obliged to disconnect high level of electromagnetic energy accumulated in the trip coil.

An auxiliary relay can be used between the protection IED trip contact and the circuit breaker coil. This way the breaking capacity question is solved, but the TCS circuit in the protection IED monitors the healthy auxiliary relay coil, not the circuit breaker coil. The separate trip circuit supervision relay is applicable for this to supervise the trip coil of the circuit breaker.

Dimensioning of the external resistor

Under normal operating conditions, the applied external voltage is divided between the relay's internal circuit and the external trip circuit so that at the minimum 10 V (3...10 V) remains over the relay's internal circuit. Should the external circuit's resistance be too high or the internal circuit's too low, for example due to welded relay contacts, the fault is detected.

Mathematically, the operation condition can be expressed as:

$$U_c - (R_{ext} + R_s) \times I_c \geq 10V\ DC$$

(Equation 29)

U_c	Operating voltage over the supervised trip circuit
I_c	Measuring current through the trip circuit, appr. 1.0 mA (0.85...1.20 mA)
R_{ext}	external shunt resistance
R_s	trip coil resistance

If the external shunt resistance is used, it has to be calculated not to interfere with the functionality of the supervision or the trip coil. Too high a resistance causes too high a voltage drop, jeopardizing the requirement of at least 20 V over the internal circuit, while a resistance too low can enable false operations of the trip coil.

Table 14: Values recommended for the external resistor R_{ext}

Operating voltage U_c	Shunt resistor R_{ext}
48 V DC	10 kΩ, 5 W
60 V DC	22 kΩ, 5 W
110 V DC	33 kΩ, 5 W
220 V DC	68 kΩ, 5 W

Due to the requirement that the voltage over the TCSSCBR contact must be 20V or higher, the correct operation is not guaranteed with auxiliary operating voltages lower than 48V DC because of the voltage drop in R_{ext} and the operating coil or even voltage drop of the feeding auxiliary voltage system which can cause too low voltage values over the TCSSCBR contact. In this case, erroneous alarming can occur.

At lower (<48V DC) auxiliary circuit operating voltages, it is recommended to use the circuit breaker position to block unintentional operation of TCSSCBR. The use of the position indication is described earlier in this chapter.

Section 10 Control

10.1 Apparatus control

10.1.1 Identification

Function description	IEC 61850 identification	IEC 60617 identification	ANSI/IEEE C37.2 device number
Bay control	QCBAY	-	-
Local remote	LOCREM	-	-
Local remote control	LOCREMCTRL	-	-

10.1.2 Application

The apparatus control is a function for control and supervising of circuit breakers, disconnectors, and earthing switches within a bay. Permission to operate is given after evaluation of conditions from other functions such as interlocking, synchrocheck, operator place selection and external or internal blockings.

The complete apparatus control function is not included in this product, and the information below is included for understanding of the principle for the use of QCBAY, LOCREM, and LOCREMCTRL for the selection of the operator place.

Figure 41 gives an overview from what places the apparatus control function receive commands. Commands to an apparatus can be initiated from the Control Centre (CC), the station HMI or the local HMI on the IED front.

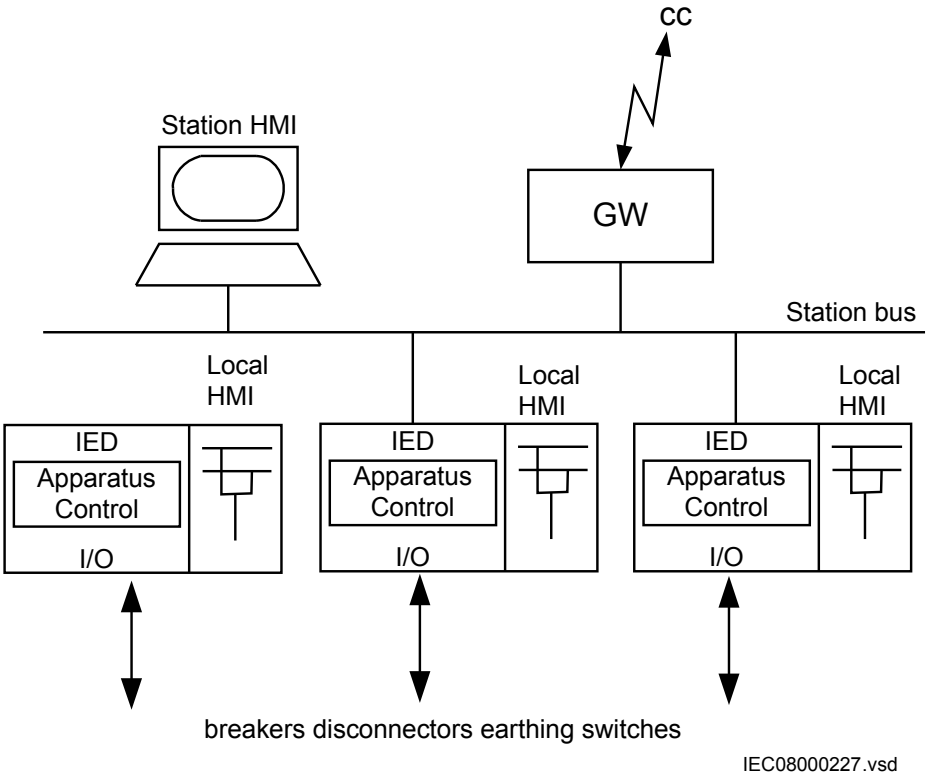

Figure 41: Overview of the apparatus control functions

Features in the apparatus control function:

- Operation of primary apparatuses
- Select-Execute principle to give high security
- Selection function to prevent simultaneous operation
- Selection and supervision of operator place
- Command supervision
- Block/deblock of operation
- Block/deblock of updating of position indications
- Substitution of position indications
- Overriding of interlocking functions
- Overriding of synchrocheck
- Operation counter
- Suppression of Mid position

The apparatus control function is realized by means of a number of function blocks designated:

- Switch controller SCSWI
- Circuit breaker SXCBR
- Circuit switch SXSWI
- Position evaluation POS_EVAL
- Select release SELGGIO

- Bay control QCBAY
- Local remote LOCREM
- Local remote control LOCREMCTRL

SCSWI, SXCBR, QCBAY and SXSWI are logical nodes according to IEC 61850. The signal flow between these function blocks appears in figure 42. The function Logical node Interlocking (SCILO) in the figure 42 is the logical node for interlocking.

Control operation can be performed from the local IED HMI. If the administrator has defined users with the UMT tool, then the local/remote switch is under authority control. If not, the default (factory) user is the SuperUser that can perform control operations from the local IED HMI without LogOn. The default position of the local/remote switch is on remote.

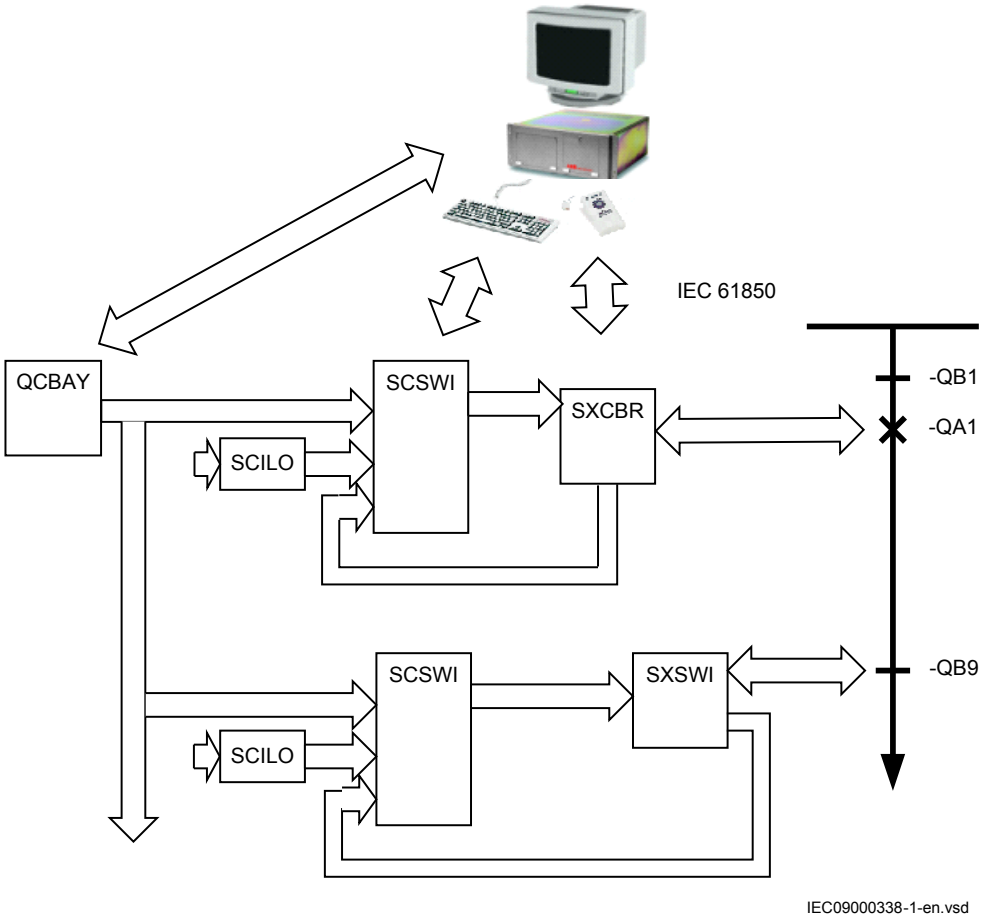

Figure 42: Signal flow between apparatus control function blocks

The IEC 61850 communication has always priority over binary inputs, e.g. a block command on binary inputs will not prevent commands over IEC 61850.

Bay control (QCBAY)

The Bay control (QCBAY) is used to handle the selection of the operator place for the bay. The function gives permission to operate from two types of locations either from Remote (for example, control centre or station HMI) or from Local (local HMI on the IED) or from all (Local and Remote). The Local/Remote switch position can also be set to Off, which means no operator place selected that is, operation is not possible neither from local nor from remote.

QCBAY also provides blocking functions that can be distributed to different apparatuses within the bay. There are two different blocking alternatives:

- Blocking of update of positions
- Blocking of commands

The function does not have a corresponding functionality defined in the IEC 61850 standard, which means that this function is included as a vendor specific logical node.

10.1.3 Interaction between modules

A typical bay with apparatus control function consists of a combination of logical nodes or functions that are described here:

- The Switch controller (SCSWI) initializes all operations for one apparatus and performs the actual switching and is more or less the interface to the drive of one apparatus. It includes the position handling as well as the control of the position.
- The Circuit breaker (SXCBR) is the process interface to the circuit breaker for the apparatus control function.
- The Circuit switch (SXSWI) is the process interface to the disconnector or the earthing switch for the apparatus control function.
- The Bay control (QCBAY) fulfils the bay-level functions for the apparatuses, such as operator place selection and blockings for the complete bay.
- The function (SELGGIO), deals with reservation of the bay.
- The Four step overcurrent protection (OC4PTOC) trips the breaker.
- The Protection trip logic (SMPPTRC) connects the "trip" outputs of one or more protection functions to a common "trip" to be transmitted to SXCBR.
- The Autorecloser (SMBRREC) consists of the facilities to automatically close a tripped breaker with respect to a number of configurable conditions.
- The logical node Interlocking (SCILO) provides the information to SCSWI whether it is permitted to operate due to the switchyard topology. The interlocking conditions are evaluated with separate logic and connected to SCILO .
- The Synchrocheck, energizing check, and synchronizing (SESRSYN) calculates and compares the voltage phasor difference from both sides of an open breaker with predefined switching conditions (synchrocheck). Also the case that one side is dead (energizing-check) is included.
- The logical node Generic Automatic Process Control, GAPC, is an automatic function that reduces the interaction between the operator and the system.

With one command, the operator can start a sequence that will end with a connection of a process object (for example a line) to one of the possible busbars.

The overview of the interaction between these functions is shown in figure 43 below.

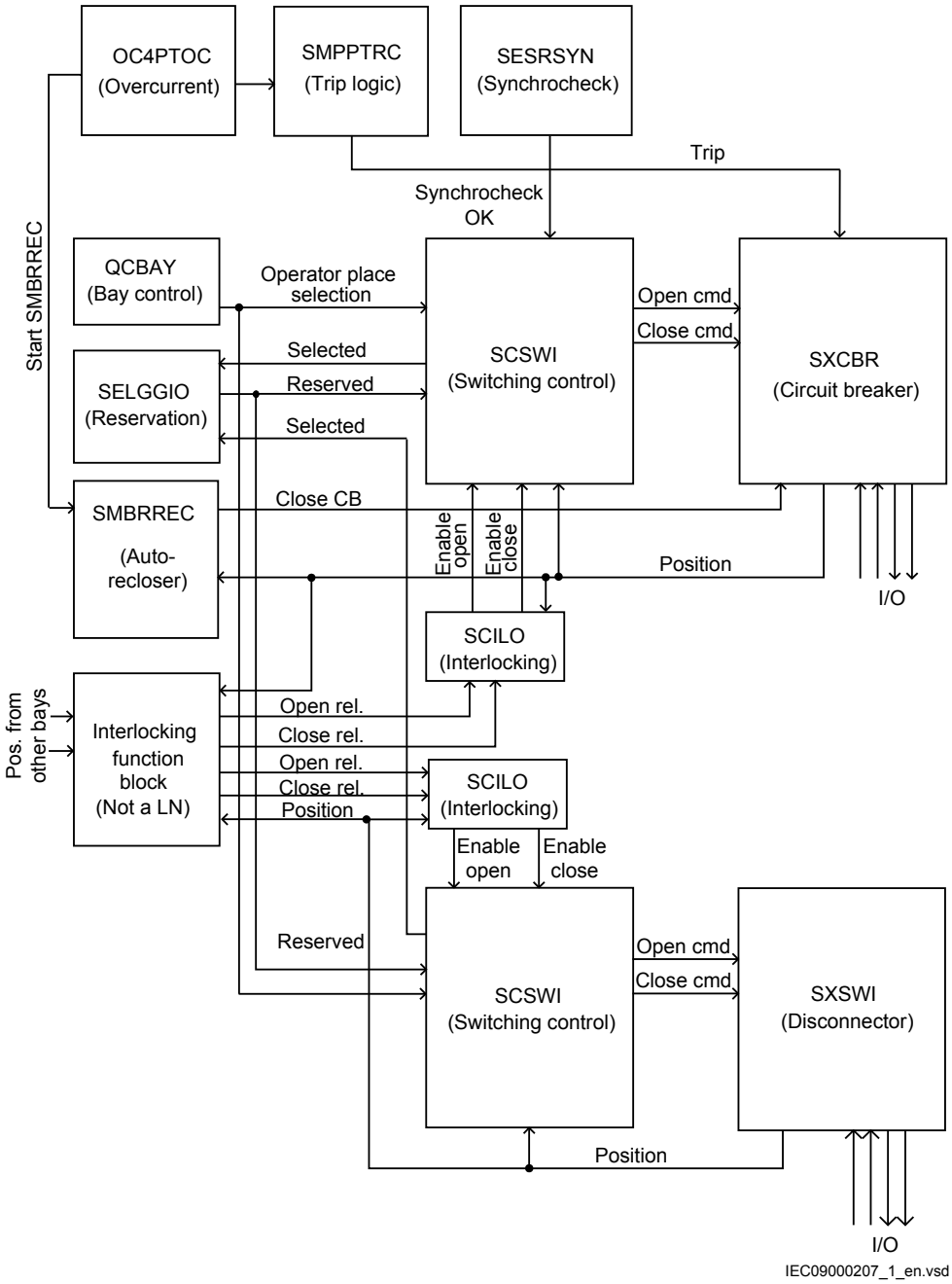

Figure 43: Example overview of the interactions between functions in a typical bay

10.1.4 Setting guidelines

The setting parameters for the apparatus control function are set via the local HMI or PCM600.

10.1.4.1 Bay control (QCBAY)

If the parameter *AllPSTOValid* is set to *No priority*, all originators from local and remote are accepted without any priority.

10.2 Logic rotating switch for function selection and LHMI presentation SLGGIO

10.2.1 Identification

Function description	IEC 61850 identification	IEC 60617 identification	ANSI/IEEE C37.2 device number
Logic rotating switch for function selection and LHMI presentation	SLGGIO	-	-

10.2.2 Application

The logic rotating switch for function selection and LHMI presentation function (SLGGIO) (or the selector switch function block, as it is also known) is used to get a selector switch functionality similar with the one provided by a hardware multi-position selector switch. Hardware selector switches are used extensively by utilities, in order to have different functions operating on pre-set values. Hardware switches are however sources for maintenance issues, lower system reliability and extended purchase portfolio. The virtual selector switches eliminate all these problems.

SLGGIO function block has two operating inputs (UP and DOWN), one blocking input (BLOCK) and one operator position input (PSTO).

SLGGIO can be activated both from the local HMI and from external sources (switches), via the IED binary inputs. It also allows the operation from remote (like the station computer). SWPOSN is an integer value output, giving the actual output number. Since the number of positions of the switch can be established by settings (see below), one must be careful in coordinating the settings with the configuration (if one sets the number of positions to x in settings – for example, there will be only the first x outputs available from the block in the configuration). Also the frequency of the (UP or DOWN) pulses should be lower than the setting *tPulse*.

The operation from local HMI is from select or indication buttons (32 positions). Typical applications are: Select operating modes for e.g. Auto reclose, Energizing check, Earth-fault protection (IN,UN). The output integer can be connected to an

Integer to Binary function block to give the position as a boolean for use in the configuration.

10.2.3 Setting guidelines

The following settings are available for the Logic rotating switch for function selection and LHMI presentation (SLGGIO) function:

Operation: Sets the operation of the function *On* or *Off*.

NrPos: Sets the number of positions in the switch (max. 32). This setting influence the behavior of the switch when changes from the last to the first position.

OutType: *Steady* or *Pulsed*.

tPulse: In case of a pulsed output, it gives the length of the pulse (in seconds).

tDelay: The delay between the UP or DOWN activation signal positive front and the output activation.

StopAtExtremes: Sets the behavior of the switch at the end positions – if set to *Disabled*, when pressing UP while on first position, the switch will jump to the last position; when pressing DOWN at the last position, the switch will jump to the first position; when set to *Enabled*, no jump will be allowed.

10.3 Selector mini switch VSGGIO

10.3.1 Identification

Function description	IEC 61850 identification	IEC 60617 identification	ANSI/IEEE C37.2 device number
Selector mini switch	VSGGIO	-	-

10.3.2 Application

Selector mini switch (VSGGIO) function is a multipurpose function used in the configuration tool in PCM600 for a variety of applications, as a general purpose switch. VSGGIO can be used for both acquiring an external switch position (through the IPOS1 and the IPOS2 inputs) and represent it through the single line diagram symbols (or use it in the configuration through the outputs POS1 and POS2) as well as, a command function (controlled by the PSTO input), giving switching commands through the CMDPOS12 and CMDPOS21 outputs.

The output POSITION is an integer output, showing the actual position as an integer number 0 – 3.

An example where VSGGIO is configured to switch Autorecloser on–off from a button symbol on the local HMI is shown in Figure 10. The I and O buttons on the local HMI are normally used for on–off operations of the circuit breaker.

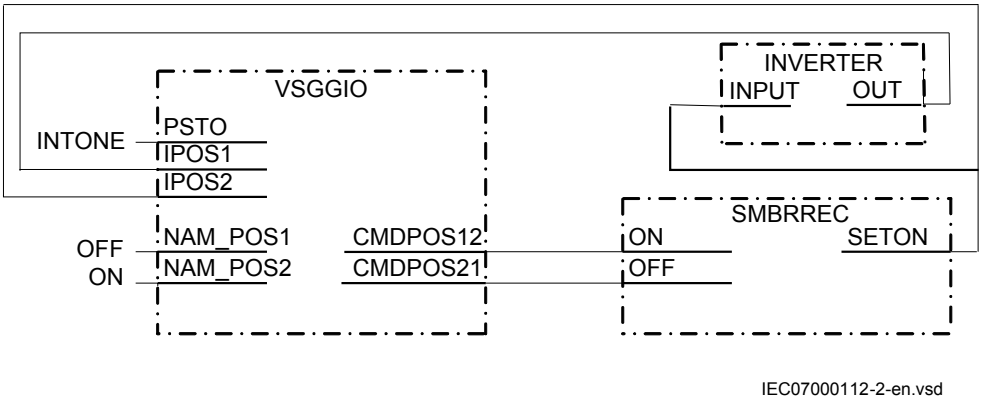

Figure 44: Control of Autorecloser from local HMI through Selector mini switch

10.3.3 Setting guidelines

Selector mini switch (VSGGIO) function can generate pulsed or steady commands (by setting the *Mode* parameter). When pulsed commands are generated, the length of the pulse can be set using the *tPulse* parameter. Also, being accessible on the single line diagram (SLD), this function block has two control modes (settable through *CtlModel*): *Dir Norm* and *SBO Enh*.

10.4 IEC61850 generic communication I/O functions DPGGIO

10.4.1 Identification

Function description	IEC 61850 identification	IEC 60617 identification	ANSI/IEEE C37.2 device number
IEC 61850 generic communication I/O functions	DPGGIO	-	-

10.4.2 Application

The IEC61850 generic communication I/O functions (DPGGIO) function block is used to send three logical outputs to other systems or equipment in the substation. The three inputs are named OPEN, CLOSE and VALID, since this function block is intended to be used as a position indicator block in interlocking and reservation station-wide logics.

10.4.3 Setting guidelines

The function does not have any parameters available in the local HMI or PCM600.

10.5 Single point generic control 8 signals SPC8GGIO

10.5.1 Identification

Function description	IEC 61850 identification	IEC 60617 identification	ANSI/IEEE C37.2 device number
Single point generic control 8 signals	SPC8GGIO	-	-

10.5.2 Application

The Single point generic control 8 signals (SPC8GGIO) function block is a collection of 8 single point commands, designed to bring in commands from REMOTE (SCADA) to those parts of the logic configuration that do not need complicated function blocks that have the capability to receive commands (for example SCSWI). In this way, simple commands can be sent directly to the IED outputs, without confirmation. Confirmation (status) of the result of the commands is supposed to be achieved by other means, such as binary inputs and SPGGIO function blocks.

PSTO is the universal operator place selector for all control functions. Even if PSTO can be configured to allow LOCAL or ALL operator positions, the only functional position usable with the SPC8GGIO function block is REMOTE.

10.5.3 Setting guidelines

The parameters for the single point generic control 8 signals (SPC8GGIO) function are set via the local HMI or PCM600.

Operation: turning the function operation *On*/*Off*.

There are two settings for every command output (totally 8):

Latchedx: decides if the command signal for output *x* is *Latched* (steady) or *Pulsed*.

tPulsex: if *Latchedx* is set to *Pulsed*, then *tPulsex* will set the length of the pulse (in seconds).

10.6 Automation bits AUTOBITS

10.6.1 Identification

Function description	IEC 61850 identification	IEC 60617 identification	ANSI/IEEE C37.2 device number
AutomationBits, command function for DNP3	AUTOBITS	-	-

10.6.2 Application

The AUTOBITS function block (or the automation bits function block) is used within PCM600 in order to get into the configuration the commands coming through the DNP3 protocol.AUTOBITS function block have 32 individual outputs which each can be mapped as a Binary Output point in DNP3. The output is operated by a "Object 12" in DNP3. This object contains parameters for control-code, count, on-time and off-time. To operate an AUTOBITS output point, send a control-code of latch-On, latch-Off, pulse-On, pulse-Off, Trip or Close. The remaining parameters are regarded as appropriate. For example, pulse-On, on-time=100, off-time=300, count=5 would give 5 positive 100 ms pulses, 300 ms apart.

See the communication protocol manual for a detailed description of the DNP3 protocol

10.6.3 Setting guidelines

AUTOBITS function block has one setting, (*Operation*: *On*/*Off*) enabling or disabling the function. These names will be seen in the DNP communication configuration tool in PCM600.

Section 11 Logic

11.1 Tripping logic common 3-phase output SMPPTRC

11.1.1 Identification

Function description	IEC 61850 identification	IEC 60617 identification	ANSI/IEEE C37.2 device number
Tripping logic common 3-phase output	SMPPTRC	*I->O*	94

11.1.2 Application

All trip signals from the different protection functions shall be routed through the trip logic. In its simplest alternative the logic will only link the internal TRIP signals to a binary output and make sure that the pulse length is long enough.

The tripping logic common 3-phase output (SMPPTRC) offers only three-phase tripping. A three-phase trip for all faults offers a simple solution and is often sufficient in well meshed transmission systems and in High Voltage (HV) systems.

One SMPPTRC function block should be used for each breaker, if the object is connected to the system via more than one breaker.

To prevent closing of a circuit breaker after a trip the function can block the closing of the circuit breaker (trip lock-out).

11.1.2.1 Three-phase tripping

A simple application with three-phase tripping from the tripping logic common 3-phase output SMPPTRC utilizes part of the function block. Connect the inputs from the protection function blocks to the input TRIN. If necessary (normally the case) use the trip matrix logic TMAGGIO to combine the different function outputs to this input. Connect the output TRIP to the required binary outputs.

A typical connection is shown below in figure 45.

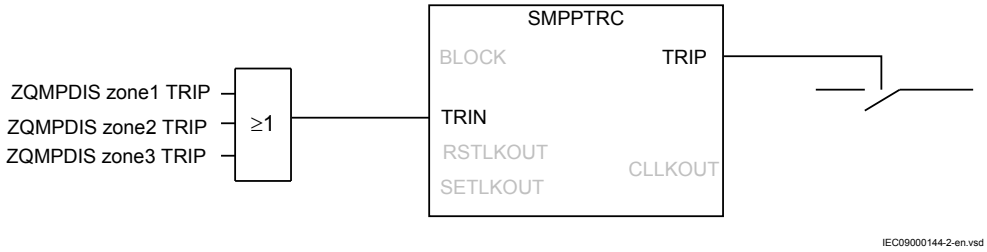

Figure 45: Tripping logic common 3-phase output SMPPTRC is used for a simple three-phase tripping application

11.1.2.2 Lock-out

This function block is provided with possibilities to initiate lock-out. The lock-out can be set to only activate the block closing output CLLKOUT or initiate the block closing output and also maintain the trip signal (latched trip).

The lock-out can then be manually reset after checking the primary fault by activating the input reset Lock-Out RSTLKOUT or via the HMI.

If external conditions are required to initiate Lock-out but not initiate trip this can be achieved by activating input SETLKOUT. The setting *AutoLock* = *Off* means that the internal trip will not activate lock-out so only initiation of the input SETLKOUT will result in lock-out. This is normally the case for overhead line protection where most faults are transient. Unsuccessful autoreclose and back-up zone tripping can in such cases be connected to initiate Lock-out by activating the input SETLKOUT.

11.1.2.3 Blocking of the function block

Blocking can be initiated internally by logic, or by the operator using a communication channel. Total blockage of Tripping logic (SMPPTRC) function is done by activating the input BLOCK and can be used to block the output of SMPPTRC in the event of internal failures.

11.1.3 Setting guidelines

The parameters for Tripping logic common 3-phase output SMPPTRC are set via the local HMI or through the Protection and Control Manager (PCM600).

The following trip parameters can be set to regulate tripping.

Operation: Sets the mode of operation. *Off* switches the function off. The normal selection is *On*.

TripLockout: Sets the scheme for lock-out. *Off* only activates the lock-out output. *On* activates the lock-out output and latches the output `TRIP`. The normal selection is *Off*.

AutoLock: Sets the scheme for lock-out. *Off* only activates lock-out through the input SETLKOUT. *On* additonally allows activation through the trip function itself. The normal selection is *Off*.

tTripMin: Sets the required minimum duration of the trip pulse. It should be set to ensure that the breaker is tripped correctly. Normal setting is *0.150s*.

11.2 Trip matrix logic TMAGGIO

11.2.1 Identification

Function description	IEC 61850 identification	IEC 60617 identification	ANSI/IEEE C37.2 device number
Trip matrix logic	TMAGGIO	-	-

11.2.2 Application

The Trip matrix logic TMAGGIO function is used to route trip signals and other logical output signals to the tripping logics SMPPTRC and SPTPTRC or to different output contacts on the IED.

TMAGGIO output signals and the physical outputs allows the user to adapt the signals to the physical tripping outputs according to the specific application needs.

11.2.3 Setting guidelines

Operation: Turns the operation of the function *On*/*Off*.

PulseTime: Defines the pulse time duration. When used for direct tripping of circuit breaker(s) the pulse time duration shall be set to approximately 0.150 seconds in order to obtain satisfactory minimum duration of the trip pulse to the circuit breaker trip coils. Used only for *ModeOutputx*: *Pulsed*.

OnDelay: Used to prevent output signals to be given for spurious inputs. Normally set to 0 or a low value. Used only for *ModeOutputx*: *Steady*.

OffDelay: Defines a minimum on time for the outputs. When used for direct tripping of circuit breaker(s) the off delay time shall be set to approximately 0.150 seconds in order to obtain a satisfactory minimum duration of the trip pulse to the circuit breaker trip coils. Used only for *ModeOutputx*: *Steady*.

ModeOutputx: Defines if output signal `OUTPUTx` (where x=1-3) is *Steady* or *Pulsed*. A steady signal follows the status of the input signals, with respect to *OnDelay* and *OffDelay*. A pulsed signal will give a pulse once, when the `Outputx` rises from 0 to 1.

11.3 Configurable logic blocks

11.3.1 Identification

Function description	IEC 61850 identification	IEC 60617 identification	ANSI/IEEE C37.2 device number
OR Function block	OR	-	-

Function description	IEC 61850 identification	IEC 60617 identification	ANSI/IEEE C37.2 device number
Inverter function block	INVERTER	-	-

Function description	IEC 61850 identification	IEC 60617 identification	ANSI/IEEE C37.2 device number
PULSETIMER function block	PULSETIMER	-	-

Function description	IEC 61850 identification	IEC 60617 identification	ANSI/IEEE C37.2 device number
Controllable gate function block	GATE	-	-

Function description	IEC 61850 identification	IEC 60617 identification	ANSI/IEEE C37.2 device number
Exclusive OR function block	XOR	-	-

Function description	IEC 61850 identification	IEC 60617 identification	ANSI/IEEE C37.2 device number
Logic loop delay function block	LOOPDELAY	-	-

Function description	IEC 61850 identification	IEC 60617 identification	ANSI/IEEE C37.2 device number
Timer function block	TIMERSET	-	-

Function description	IEC 61850 identification	IEC 60617 identification	ANSI/IEEE C37.2 device number
AND function block	AND	-	-

Function description	IEC 61850 identification	IEC 60617 identification	ANSI/IEEE C37.2 device number
Set-reset memory function block	SRMEMORY	-	-

Function description	IEC 61850 identification	IEC 60617 identification	ANSI/IEEE C37.2 device number
Reset-set with memory function block	RSMEMORY	-	-

11.3.2 Application

A set of standard logic blocks, like AND, OR etc, and timers are available for adapting the IED configuration to the specific application needs.

There are no settings for AND gates, OR gates, inverters or XOR gates.

For normal On/Off delay and pulse timers the time delays and pulse lengths are set from the local HMI or via the PST tool.

Both timers in the same logic block (the one delayed on pick-up and the one delayed on drop-out) always have a common setting value.

For controllable gates, settable timers and SR flip-flops with memory, the setting parameters are accessible via the local HMI or via the PST tool.

11.3.3.1 Configuration

Logic is configured using the ACT configuration tool in PCM600.

Execution of functions as defined by the configurable logic blocks runs according to a fixed sequence with different cycle times.

For each cycle time, the function block is given an serial execution number. This is shown when using the ACT configuration tool with the designation of the function block and the cycle time, see example below.

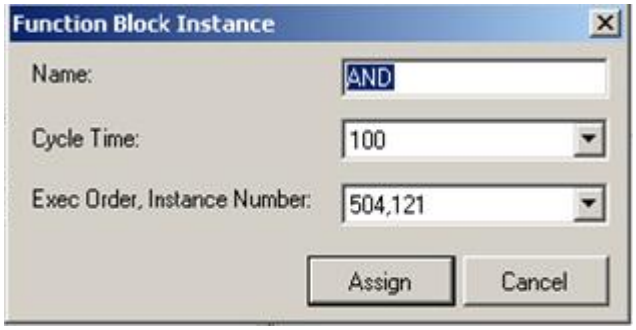

IEC09000695_2_en.vsd

Figure 46: Example designation, serial execution number and cycle time for logic function

The execution of different function blocks within the same cycle is determined by the order of their serial execution numbers. Always remember this when connecting two or more logical function blocks in series.

Always be careful when connecting function blocks with a fast cycle time to function blocks with a slow cycle time.
Remember to design the logic circuits carefully and always check the execution sequence for different functions. In other cases, additional time delays must be introduced into the logic schemes to prevent errors, for example, race between functions.
Default value on all four inputs of the AND gate are logical 1 which makes it possible for the user to just use the required number of inputs and leave the rest un-connected. The output OUT has a default value 0 initially, which will suppress one cycle pulse if the function has been put in the wrong execution order.

11.4 Fixed signals FXDSIGN

11.4.1 Identification

Function description	IEC 61850 identification	IEC 60617 identification	ANSI/IEEE C37.2 device number
Fixed signals	FXDSIGN	-	-

11.4.2 Application

The Fixed signals function (FXDSIGN) generates a number of pre-set (fixed) signals that can be used in the configuration of an IED, either for forcing the unused inputs in other function blocks to a certain level/value, or for creating certain logic.

Example for use of GRP_OFF signal in FXDSIGN

The Restricted earth fault function REFPDIF can be used both for auto-transformers and normal transformers.

When used for auto-transformers, information from both windings parts, together with the neutral point current, needs to be available to the function. This means that three inputs are needed.

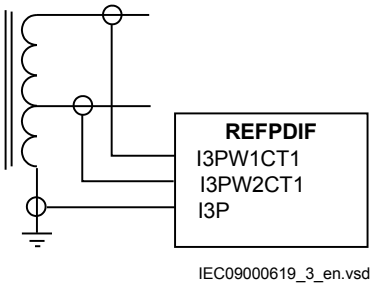

Figure 47: REFPDIF function inputs for autotransformer application

For normal transformers only one winding and the neutral point is available. This means that only two inputs are used. Since all group connections are mandatory to be connected, the third input needs to be connected to something, which is the GRP_OFF signal in FXDSIGN function block.

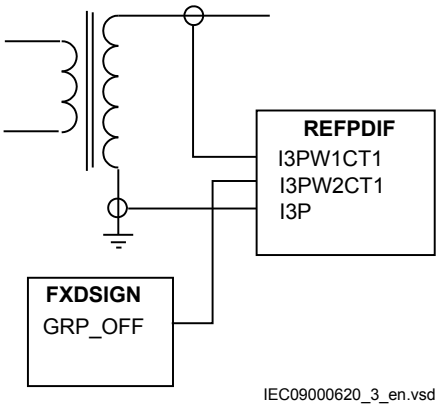

Figure 48: REFPDIF function inputs for normal transformer application

11.5 Boolean 16 to integer conversion B16I

11.5.1 Identification

Function description	IEC 61850 identification	IEC 60617 identification	ANSI/IEEE C37.2 device number
Boolean 16 to integer conversion	B16I	-	-

11.5.2 Application

Boolean 16 to integer conversion function B16I is used to transform a set of 16 binary (logical) signals into an integer. It can be used – for example, to connect logical output signals from a function (like distance protection) to integer inputs

from another function (like line differential protection). B16I does not have a logical node mapping.

11.5.3 Setting guidelines

The function does not have any parameters available in Local HMI or Protection and Control IED Manager (PCM600).

11.6 Boolean 16 to integer conversion with logic node representation B16IFCVI

11.6.1 Identification

Function description	IEC 61850 identification	IEC 60617 identification	ANSI/IEEE C37.2 device number
Boolean 16 to integer conversion with logic node representation	B16IFCVI	-	-

11.6.2 Application

Boolean 16 to integer conversion with logic node representation function B16IFCVI is used to transform a set of 16 binary (logical) signals into an integer. B16IFCVI can receive an integer from a station computer – for example, over IEC 61850–8–1. These functions are very useful when you want to generate logical commands (for selector switches or voltage controllers) by inputting an integer number. B16IFCVI has a logical node mapping in IEC 61850.

11.6.3 Setting guidelines

The function does not have any parameters available in the local HMI or Protection and Control IED Manager (PCM600).

11.7 Integer to boolean 16 conversion IB16A

11.7.1 Identification

Function description	IEC 61850 identification	IEC 60617 identification	ANSI/IEEE C37.2 device number
Integer to boolean 16 conversion	IB16A	-	-

11.7.2 Application

Integer to boolean 16 conversion function (IB16A) is used to transform an integer into a set of 16 binary (logical) signals. It can be used – for example, to connect integer output signals from one function to binary (logical) inputs to another function. IB16A function does not have a logical node mapping.

11.7.3 Setting guidelines

The function does not have any parameters available in the local HMI or Protection and Control IED Manager (PCM600).

11.8 Integer to boolean 16 conversion with logic node representation IB16FCVB

11.8.1 Identification

Function description	IEC 61850 identification	IEC 60617 identification	ANSI/IEEE C37.2 device number
Integer to boolean 16 conversion with logic node representation	IB16FCVB	-	-

11.8.2 Application

Integer to boolean 16 conversion with logic node representation function (IB16FCVB) is used to transform an integer into a set of 16 binary (logical) signals. IB16FCVB function can receive an integer from a station computer – for example, over IEC 61850–8–1. These functions are very useful when the user wants to generate logical commands (for selector switches or voltage controllers) by inputting an integer number. IB16FCVB function has a logical node mapping in IEC 61850.

11.8.3 Settings

The function does not have any parameters available in the local HMI or Protection and Control IED Manager (PCM600)

Section 12 Monitoring

12.1 IEC61850 generic communication I/O functions SPGGIO

12.1.1 Identification

Function description	IEC 61850 identification	IEC 60617 identification	ANSI/IEEE C37.2 device number
IEC 61850 generic communication I/O functions	SPGGIO	-	-

12.1.2 Application

IEC 61850–8–1 generic communication I/O functions (SPGGIO) function is used to send one single logical output to other systems or equipment in the substation. It has one visible input, that should be connected in ACT tool.

12.1.3 Setting guidelines

The function does not have any parameters available in Local HMI or Protection and Control IED Manager (PCM600).

12.2 IEC61850 generic communication I/O functions 16 inputs SP16GGIO

12.2.1 Identification

Function description	IEC 61850 identification	IEC 60617 identification	ANSI/IEEE C37.2 device number
IEC 61850 generic communication I/O functions 16 inputs	SP16GGIO	-	-

12.2.2 Application

SP16GGIO function block is used to send up to 16 logical signals to other systems or equipment in the substation. Inputs should be connected in ACT tool.

12.2.3 Setting guidelines

The function does not have any parameters available in Local HMI or Protection and Control IED Manager (PCM600).

12.3 IEC61850 generic communication I/O functions MVGGIO

12.3.1 Identification

Function description	IEC 61850 identification	IEC 60617 identification	ANSI/IEEE C37.2 device number
IEC61850 generic communication I/O functions	MVGGIO	-	-

12.3.2 Application

IEC61850 generic communication I/O functions (MVGGIO) function is used to send the instantaneous value of an analog signal to other systems or equipment in the substation. It can also be used inside the same IED, to attach a RANGE aspect to an analog value and to permit measurement supervision on that value.

12.3.3 Setting guidelines

The settings available for IEC61850 generic communication I/O functions (MVGGIO) function allows the user to choose a deadband and a zero deadband for the monitored signal. Values within the zero deadband are considered as zero.

The high and low limit settings provides limits for the high-high-, high, normal, low and low-low ranges of the measured value. The actual range of the measured value is shown on the range output of MVGGIO function block. When a Measured value expander block (MVEXP) is connected to the range output, the logical outputs of the MVEXP are changed accordingly.

12.4 Measurements

12.4.1 Identification

Function description	IEC 61850 identification	IEC 60617 identification	ANSI/IEEE C37.2 device number
Measurements	CVMMXN	P, Q, S, I, U, f	-
Phase current measurement	CMMXU	I	-
Phase-phase voltage measurement	VMMXU	U	-
Current sequence component measurement	CMSQI	I1, I2, I0	-
Voltage sequence measurement	VMSQI	U1, U2, U0	-
Phase-neutral voltage measurement	VNMMXU	U	-

12.4.2 Application

Measurement functions is used for power system measurement, supervision and reporting to the local HMI, monitoring tool within PCM600 or to station level for example, via IEC 61850. The possibility to continuously monitor measured values of active power, reactive power, currents, voltages, frequency, power factor etc. is vital for efficient production, transmission and distribution of electrical energy. It provides to the system operator fast and easy overview of the present status of the power system. Additionally, it can be used during testing and commissioning of protection and control IEDs in order to verify proper operation and connection of instrument transformers (CTs and VTs). During normal service by periodic comparison of the measured value from the IED with other independent meters the proper operation of the IED analog measurement chain can be verified. Finally, it

can be used to verify proper direction orientation for distance or directional overcurrent protection function.

The available measured values of an IED are depending on the actual hardware (TRM) and the logic configuration made in PCM600.

All measured values can be supervised with four settable limits that is, low-low limit, low limit, high limit and high-high limit. A zero clamping reduction is also supported, that is, the measured value below a settable limit is forced to zero which reduces the impact of noise in the inputs. There are no interconnections regarding any settings or parameters, neither between functions nor between signals within each function.

Zero clampings are handled by *ZeroDb* for each signal separately for each of the functions. For example, the zero clamping of U12 is handled by *ULZeroDb* in VMMXU, zero clamping of I1 is handled by *ILZeroDb* in CMMXU.

Dead-band supervision can be used to report measured signal value to station level when change in measured value is above set threshold limit or time integral of all changes since the last time value updating exceeds the threshold limit. Measure value can also be based on periodic reporting.

The measurement function, CVMMXN, provides the following power system quantities:

- P, Q and S: three phase active, reactive and apparent power
- PF: power factor
- U: phase-to-phase voltage amplitude
- I: phase current amplitude
- F: power system frequency

The output values are displayed in the local HMI under **Main menu/Tests/ Function status/Monitoring/CVMMXN/Outputs**

The measuring functions CMMXU, VNMMXU and VMMXU provide physical quantities:

- I: phase currents (amplitude and angle) (CMMXU)
- U: voltages (phase-to-earth and phase-to-phase voltage, amplitude and angle) (VMMXU, VNMMXU)

It is possible to calibrate the measuring function above to get better then class 0.5 presentation. This is accomplished by angle and amplitude compensation at 5, 30 and 100% of rated current and at 100% of rated voltage.

The power system quantities provided, depends on the actual hardware, (TRM) and the logic configuration made in PCM600.

The measuring functions CMSQI and VMSQI provide sequence component quantities:

- I: sequence currents (positive, zero, negative sequence, amplitude and angle)
- U: sequence voltages (positive, zero and negative sequence, amplitude and angle).

The CVMMXN function calculates three-phase power quantities by using fundamental frequency phasors (DFT values) of the measured current respectively voltage signals. The measured power quantities are available either, as instantaneously calculated quantities or, averaged values over a period of time (low pass filtered) depending on the selected settings.

12.4.3 Setting guidelines

The available setting parameters of the measurement function CVMMXN, CMMXU, VMMXU, CMSQI, VMSQI, VNMMXU are depending on the actual hardware (TRM) and the logic configuration made in PCM600.

The parameters for the Measurement functions CVMMXN, CMMXU, VMMXU, CMSQI, VMSQI, VNMMXU are set via the local HMI or PCM600.

GlobalBaseSel: Selects the global base value group used by the function to define (*IBase*), (*UBase*) and (*SBase*).

Operation: *Off*/*On*. Every function instance (CVMMXN, CMMXU, VMMXU, CMSQI, VMSQI, VNMMXU) can be taken in operation (*On*) or out of operation (*Off*).

The following general settings can be set for the **Measurement function** (CVMMXN).

PowAmpFact: Amplitude factor to scale power calculations.

PowAngComp: Angle compensation for phase shift between measured I & U.

Mode: Selection of measured current and voltage. There are 9 different ways of calculating monitored three-phase values depending on the available VT inputs connected to the IED. See parameter group setting table.

k: Low pass filter coefficient for power measurement, U and I.

UAmpCompY: Amplitude compensation to calibrate voltage measurements at Y% of Ur, where Y is equal to 5, 30 or 100.

IAmpCompY: Amplitude compensation to calibrate current measurements at Y% of Ir, where Y is equal to 5, 30 or 100.

IAngCompY: Angle compensation to calibrate angle measurements at Y% of Ir, where Y is equal to 5, 30 or 100.

The following general settings can be set for the **Phase-phase current measurement** (CMMXU).

IAmpCompY: Amplitude compensation to calibrate current measurements at Y% of Ir, where Y is equal to 5, 30 or 100.

IAngCompY: Angle compensation to calibrate angle measurements at Y% of Ir, where Y is equal to 5, 30 or 100.

The following general settings can be set for the **Phase-phase voltage measurement** (VMMXU).

UAmpCompY: Amplitude compensation to calibrate voltage measurements at Y% of Ur, where Y is equal to 5, 30 or 100.

UAngCompY: Angle compensation to calibrate angle measurements at Y% of Ur, where Y is equal to 5, 30 or 100.

The following general settings can be set for **all monitored quantities** included in the functions (CVMMXN, CMMXU, VMMXU, CMSQI, VMSQI, VNMMXU) X in setting names below equals S, P, Q, PF, U, I, F, IL1-3, UL1-3UL12-31, I1, I2, 3I0, U1, U2 or 3U0.

Xmin: Minimum value for analog signal X.

Xmax: Maximum value for analog signal X.

Xmin and *Xmax* values are directly set in applicable measuring unit, V, A, and so on, for all measurement functions, except CVMMXN where *Xmin* and *Xmax* values are set in % of *SBase*.

XZeroDb: Zero point clamping. A signal value less than *XZeroDb* is forced to zero.

XRepTyp: Reporting type. Cyclic (*Cyclic*), amplitude deadband (*Dead band*) or integral deadband (*Int deadband*). The reporting interval is controlled by the parameter *XDbRepInt*.

XDbRepInt: Reporting deadband setting. Cyclic reporting is the setting value and is reporting interval in seconds. Amplitude deadband is the setting value in % of measuring range. Integral deadband setting is the integral area, that is, measured value in % of measuring range multiplied by the time between two measured values.

Limits are directly set in applicable measuring unit, V, A , and so on, for all measureing functions, except CVMMXN where limits are set in % of *SBase*.

XHiHiLim: High-high limit.

XHiLim: High limit.

XLowLim: Low limit.

XLowLowLim: Low-low limit.

XLimHyst: Hysteresis value in % of range and is common for all limits.

All phase angles are presented in relation to defined reference channel. The parameter *PhaseAngleRef* defines the reference.

Calibration curves

It is possible to calibrate the functions (CVMMXN, CMMXU, VNMMXU and VMMXU) to get class 0.5 presentations of currents, voltages and powers. This is accomplished by amplitude and angle compensation at 5, 30 and 100% of rated current and voltage. The compensation curve will have the characteristic for amplitude and angle compensation of currents as shown in figure 49 (example). The first phase will be used as reference channel and compared with the curve for calculation of factors. The factors will then be used for all related channels.

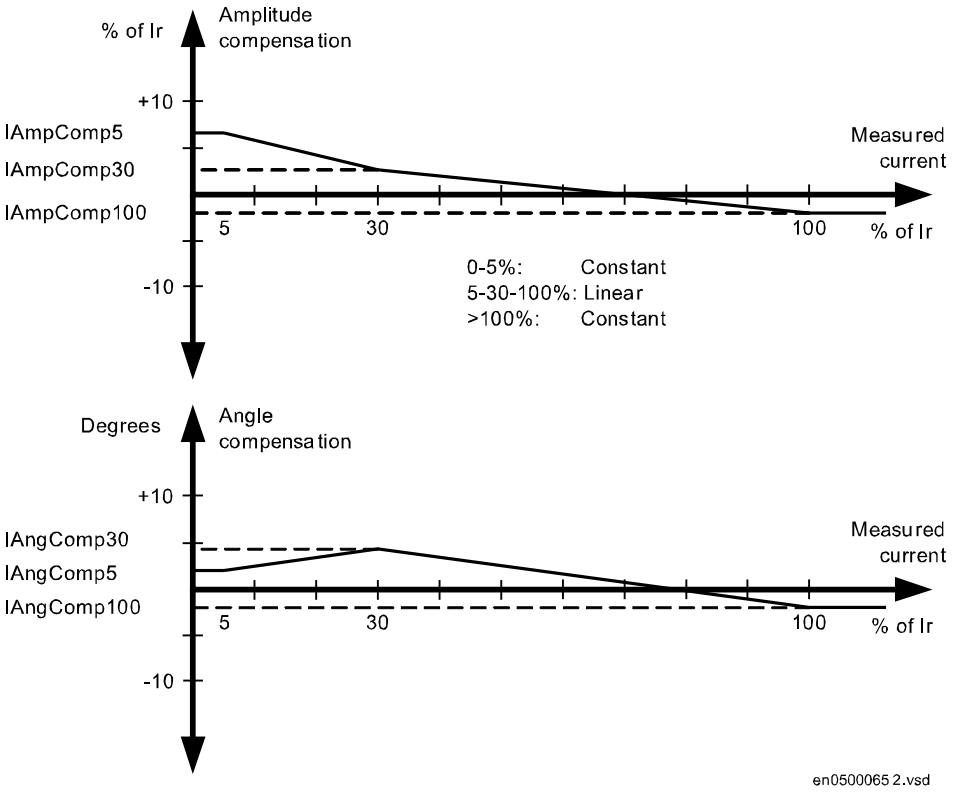

Figure 49: Calibration curves

12.4.4 Setting examples

Three setting examples, in connection to Measurement function (CVMMXN), are provided:

- Measurement function (CVMMXN) application for a 400 kV OHL
- Measurement function (CVMMXN) application on the secondary side of a transformer
- Measurement function (CVMMXN) application for a generator

For each of them detail explanation and final list of selected setting parameters values will be provided.

The available measured values of an IED are depending on the actual hardware (TRM) and the logic configuration made in PCM600.

12.4.4.1 Measurement function application for a 400 kV OHL

Single line diagram for this application is given in figure 50:

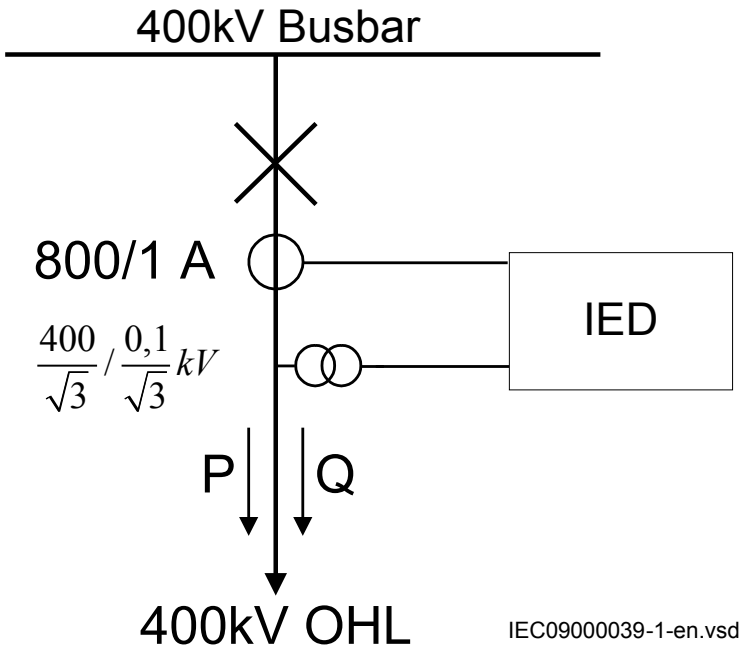

Figure 50: Single line diagram for 400 kV OHL application

In order to monitor, supervise and calibrate the active and reactive power as indicated in figure 50 it is necessary to do the following:

1. Set correctly CT and VT data and phase angle reference channel *PhaseAngleRef* using PCM600 for analog input channels
2. Connect, in PCM600, measurement function to three-phase CT and VT inputs
3. Set under General settings parameters for the Measurement function:

- general settings as shown in table 15.
- level supervision of active power as shown in table 16.
- calibration parameters as shown in table 17.

Table 15: General settings parameters for the Measurement function

Setting	Short Description	Selected value	Comments
Operation	Operation *Off On*	*On*	Function must be *On*
PowAmpFact	Amplitude factor to scale power calculations	1.000	It can be used during commissioning to achieve higher measurement accuracy. Typically no scaling is required
PowAngComp	Angle compensation for phase shift between measured I & U	0.0	It can be used during commissioning to achieve higher measurement accuracy. Typically no angle compensation is required. As well here required direction of P & Q measurement is towards protected object (as per IED internal default direction)
Mode	Selection of measured current and voltage	*L1, L2, L3*	All three phase-to-earth VT inputs are available
k	Low pass filter coefficient for power measurement, U and I	0.00	Typically no additional filtering is required

Table 16: Settings parameters for level supervision

Setting	Short Description	Selected value	Comments
PMin	Minimum value	-750	Minimum expected load
PMax	Minimum value	750	Maximum expected load
PZeroDb	Zero point clamping in 0.001% of range	3000	Set zero point clamping to 45 MW that is, 3% of 1500 MW
PRepTyp	Reporting type	db	Select amplitude deadband supervision
PDbRepInt	Cycl: Report interval (s), Db: In % of range, Int Db: In %s	2	Set ±Δdb=30 MW that is, 2% (larger changes than 30 MW will be reported)
PHiHiLim	High High limit (physical value)	600	High alarm limit that is, extreme overload alarm
PHiLim	High limit (physical value)	500	High warning limit that is, overload warning
PLowLim	Low limit (physical value)	-800	Low warning limit. Not active
PLowLowlLim	Low Low limit (physical value)	-800	Low alarm limit. Not active
PLimHyst	Hysteresis value in % of range (common for all limits)	2	Set ±Δ Hysteresis MW that is, 2%

Table 17: Settings for calibration parameters

Setting	Short Description	Selected value	Comments
IAmpComp5	Amplitude factor to calibrate current at 5% of Ir	0.00	
IAmpComp30	Amplitude factor to calibrate current at 30% of Ir	0.00	
IAmpComp100	Amplitude factor to calibrate current at 100% of Ir	0.00	
UAmpComp5	Amplitude factor to calibrate voltage at 5% of Ur	0.00	
UAmpComp30	Amplitude factor to calibrate voltage at 30% of Ur	0.00	
UAmpComp100	Amplitude factor to calibrate voltage at 100% of Ur	0.00	
IAngComp5	Angle calibration for current at 5% of Ir	0.00	
IAngComp30	Angle pre-calibration for current at 30% of Ir	0.00	
IAngComp100	Angle pre-calibration for current at 100% of Ir	0.00	

12.5 Event counter CNTGGIO

12.5.1 Identification

Function description	IEC 61850 identification	IEC 60617 identification	ANSI/IEEE C37.2 device number
Event counter	CNTGGIO		-

12.5.2 Application

Event counter (CNTGGIO) has six counters which are used for storing the number of times each counter has been activated. CNTGGIO can be used to count how many times a specific function, for example the tripping logic, has issued a trip signal. All six counters have a common blocking and resetting feature.

12.5.3 Setting guidelines

Operation: Sets the operation of Event counter (CNTGGIO) *On* or *Off*.

12.6 Disturbance report

12.6.1 Identification

Function description	IEC 61850 identification	IEC 60617 identification	ANSI/IEEE C37.2 device number
Disturbance report	DRPRDRE	-	-
Analog input signals	A1RADR	-	-
Analog input signals	A2RADR	-	-
Analog input signals	A3RADR	-	-
Analog input signals	A4RADR	-	-
Binary input signals	B1RBDR	-	-
Binary input signals	B2RBDR	-	-
Binary input signals	B3RBDR	-	-
Binary input signals	B4RBDR	-	-
Binary input signals	B5RBDR	-	-
Binary input signals	B6RBDR	-	-

12.6.2 Application

To get fast, complete and reliable information about disturbances in the primary and/or in the secondary system it is very important to gather information on fault currents, voltages and events. It is also important having a continuous event-logging to be able to monitor in an overview perspective. These tasks are accomplished by the disturbance report function DRPRDRE and facilitate a better understanding of the power system behavior and related primary and secondary equipment during and after a disturbance. An analysis of the recorded data provides valuable information that can be used to explain a disturbance, basis for change of IED setting plan, improve existing equipment, and so on. This information can also be used in a longer perspective when planning for and designing new installations, that is, a disturbance recording could be a part of Functional Analysis (FA).

Disturbance report DRPRDRE, always included in the IED, acquires sampled data of all selected analog and binary signals connected to the function blocks that is,

- maximum 30 external analog signals,
- 10 internal derived analog signals, and
- 96 binary signals.

Disturbance report function is a common name for several functions that is, Indications, Event recorder, Event list, Trip value recorder, Disturbance recorder.

Disturbance report function is characterized by great flexibility as far as configuration, starting conditions, recording times, and large storage capacity are

concerned. Thus, disturbance report is not dependent on the operation of protective functions, and it can record disturbances that were not discovered by protective functions for one reason or another. Disturbance report can be used as an advanced stand-alone disturbance recorder.

Every disturbance report recording is saved in the IED. The same applies to all events, which are continuously saved in a ring-buffer. Local HMI can be used to get information about the recordings, and the disturbance report files may be uploaded in the PCM600 using the Disturbance handling tool, for report reading or further analysis (using WaveWin, that can be found on the PCM600 installation CD). The user can also upload disturbance report files using FTP or MMS (over 61850–8–1) clients.

If the IED is connected to a station bus (IEC 61850-8-1), the disturbance recorder (record made and fault number) and the fault locator information are available as GOOSE or Report Control data.

12.6.3 Setting guidelines

The setting parameters for the Disturbance report function DRPRDRE are set via the local HMI or PCM600.

It is possible to handle up to 40 analog and 96 binary signals, either internal signals or signals coming from external inputs. The binary signals are identical in all functions that is, Disturbance recorder, Event recorder, Indication, Trip value recorder and Event list function.

User-defined names of binary and analog input signals is set using PCM600. The analog and binary signals appear with their user-defined names. The name is used in all related functions (Disturbance recorder, Event recorder, Indication, Trip value recorder and Event list).

Figure 51 shows the relations between Disturbance report, included functions and function blocks. Event list, Event recorder and Indication uses information from the binary input function blocks (BxRBDR). Trip value recorder uses analog information from the analog input function blocks (AxRADR),. Disturbance report function acquires information from both AxRADR and BxRBDR.

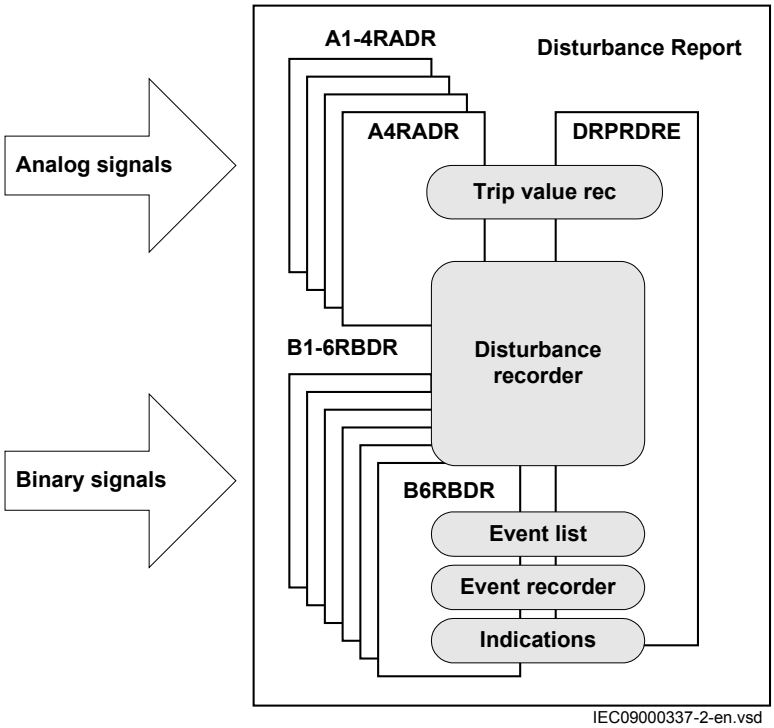

Figure 51: Disturbance report functions and related function blocks

For Disturbance report function there are a number of settings which also influences the sub-functions.

Three LED indications placed above the LCD screen makes it possible to get quick status information about the IED.

Green LED:	Steady light	In Service
	Flashing light	Internal failure
	Dark	No power supply
Yellow LED:	Function controlled by SetLEDn setting in Disturbance report function.	
Red LED:	Function controlled by SetLEDn setting in Disturbance report function.	

Operation

The operation of Disturbance report function DRPRDRE has to be set *On* or *Off*. If *Off* is selected, note that no disturbance report is registered, and none sub-function will operate (the only general parameter that influences Event list).

Operation = Off:

- Disturbance reports are not stored.
- LED information (yellow - start, red - trip) is not stored or changed.

Operation = *On*:

- Disturbance reports are stored, disturbance data can be read from the local HMI and from a PC using PCM600.
- LED information (yellow - start, red - trip) is stored.

Every recording will get a number (0 to 999) which is used as identifier (local HMI, disturbance handling tool and IEC 61850). An alternative recording identification is date, time and sequence number. The sequence number is automatically increased by one for each new recording and is reset to zero at midnight. The maximum number of recordings stored in the IED is 100. The oldest recording will be overwritten when a new recording arrives (FIFO).

To be able to delete disturbance records, *Operation* parameter has to be *On*.

The maximum number of recordings depend on each recordings total recording time. Long recording time will reduce the number of recordings to less than 100.

The IED flash disk should NOT be used to store any user files. This might cause disturbance recordings to be deleted due to lack of disk space.

Recording times

The different recording times for Disturbance report are set (the pre-fault time, post-fault time, and limit time). These recording times affect all sub-functions more or less but not the Event list function.

Prefault recording time (*PreFaultRecT*) is the recording time before the starting point of the disturbance. The setting should be at least *0.1* s to ensure enough samples for the estimation of pre-fault values in the Trip value recorder function.

Postfault recording time (*PostFaultRecT*) is the maximum recording time after the disappearance of the trig-signal (does not influence the Trip value recorder function).

Recording time limit (*TimeLimit*) is the maximum recording time after trig. The parameter limits the recording time if some trigging condition (fault-time) is very long or permanently set (does not influence the Trip value recorder function).

Post retrigger (*PostRetrig*) can be set to *On* or *Off*. Makes it possible to choose performance of Disturbance report function if a new trig signal appears in the post-fault window.

PostRetrig = Off

The function is insensitive for new trig signals during post fault time.

PostRetrig = On

The function completes current report and starts a new complete report that is, the latter will include:

- new pre-fault- and fault-time (which will overlap previous report)
- events and indications might be saved in the previous report too, due to overlap
- new trip value calculations if installed, in operation and started

Operation in test mode

If the IED is in test mode and *OpModeTest = Off*. Disturbance report function does not save any recordings and no LED information is displayed.

If the IED is in test mode and *OpModeTest = On*. Disturbance report function works in normal mode and the status is indicated in the saved recording.

12.6.3.1 Binary input signals

Up to 96 binary signals can be selected among internal logical and binary input signals. The configuration tool is used to configure the signals.

For each of the 96 signals, it is also possible to select if the signal is to be used as a trigger for the start of the Disturbance report and if the trigger should be activated on positive (1) or negative (0) slope.

OperationN: Disturbance report may trig for binary input N (*On*) or not (*Off*).

TrigLevelN: Trig on positive (*Trig on 1*) or negative (*Trig on 0*) slope for binary input N.

12.6.3.2 Analog input signals

Up to 40 analog signals can be selected among internal analog and analog input signals. PCM600 is used to configure the signals.

The analog trigger of Disturbance report is not affected if analog input M is to be included in the disturbance recording or not (*OperationM = On*/*Off*).

If *OperationM = Off*, no waveform (samples) will be recorded and reported in graph. However, Trip value, pre-fault and fault value will be recorded and reported. The input channel can still be used to trig the disturbance recorder.

If *OperationM* = *On*, waveform (samples) will also be recorded and reported in graph.

NomValueM: Nominal value for input M.

OverTrigOpM, *UnderTrigOpM*: Over or Under trig operation, Disturbance report may trig for high/low level of analog input M (*On*) or not (*Off*).

OverTrigLeM, *UnderTrigLeM*: Over or under trig level, Trig high/low level relative nominal value for analog input M in percent of nominal value.

12.6.3.3 Sub-function parameters

All functions are in operation as long as Disturbance report is in operation.

Indications

IndicationMaN: Indication mask for binary input N. If set (*Show*), a status change of that particular input, will be fetched and shown in the disturbance summary on local HMI. If not set (*Hide*), status change will not be indicated.

SetLEDN: Set yellow *Start* and red *Trip* LED on local HMI in front of the IED if binary input N changes status.

Disturbance recorder

OperationM: Analog channel M is to be recorded by the disturbance recorder (*On*) or not (*Off*).

If *OperationM* = *Off*, no waveform (samples) will be recorded and reported in graph. However, Trip value, pre-fault and fault value will be recorded and reported. The input channel can still be used to trig the disturbance recorder.

If *OperationM* = *On*, waveform (samples) will also be recorded and reported in graph.

Event recorder

Event recorder function has no dedicated parameters.

Trip value recorder

ZeroAngleRef: The parameter defines which analog signal that will be used as phase angle reference for all other analog input signals. This signal will also be used for frequency measurement and the measured frequency is used when calculating trip values. It is suggested to point out a sampled voltage input signal, for example, a line or busbar phase voltage (channel 1-30).

Event list

Event list function has no dedicated parameters.

12.6.3.4 Consideration

The density of recording equipment in power systems is increasing, since the number of modern IEDs, where recorders are included, is increasing. This leads to a vast number of recordings at every single disturbance and a lot of information has

to be handled if the recording functions do not have proper settings. The goal is to optimize the settings in each IED to be able to capture just valuable disturbances and to maximize the number that is possible to save in the IED.

The recording time should not be longer than necessary (*PostFaultrecT* and *TimeLimit*).

- Should the function record faults only for the protected object or cover more?
- How long is the longest expected fault clearing time?
- Is it necessary to include reclosure in the recording or should a persistent fault generate a second recording (*PostRetrig*)?

Minimize the number of recordings:

- Binary signals: Use only relevant signals to start the recording that is, protection trip, carrier receive and/or start signals.
- Analog signals: The level triggering should be used with great care, since unfortunate settings will cause enormously number of recordings. If nevertheless analog input triggering is used, chose settings by a sufficient margin from normal operation values. Phase voltages are not recommended for trigging.

Remember that values of parameters set elsewhere are linked to the information on a report. Such parameters are, for example, station and object identifiers, CT and VT ratios.

12.7 Measured value expander block MVEXP

12.7.1 Identification

Function description	IEC 61850 identification	IEC 60617 identification	ANSI/IEEE C37.2 device number
Measured value expander block	MVEXP	-	-

12.7.2 Application

The current and voltage measurements functions (CVMMXN, CMMXU, VMMXU and VNMMXU), current and voltage sequence measurement functions (CMSQI and VMSQI) and IEC 61850 generic communication I/O functions (MVGGIO) are provided with measurement supervision functionality. All measured values can be supervised with four settable limits, that is low-low limit, low limit, high limit and high-high limit. The measure value expander block (MVEXP) has been introduced to be able to translate the integer output signal from the measuring functions to 5 binary signals, that is below low-low limit, below low limit, normal, above high-high limit or above high limit. The output signals can be used as conditions in the configurable logic.

12.7.3 Setting guidelines

The function does not have any parameters available in Local HMI or Protection and Control IED Manager (PCM600).

GlobalBaseSel: Selects the global base value group used by the function to define (*IBase*), (*UBase*) and (*SBase*).

12.8 Station battery supervision SPVNZBAT

12.8.1 Identification

Function description	IEC 61850 identification	IEC 60617 identification	ANSI/IEEE C37.2 device number
Station battery supervision function	SPVNZBAT	U<>	-

12.8.2 Application

Usually, the load on the DC system is a constant resistance load, for example, lamps, LEDs, electronic instruments and electromagnetic contactors in a steady state condition. A transient RL load exists when breakers are tripped or closed.

The battery voltage has to be continuously monitored as the batteries can withstand moderate overvoltage and undervoltage only for a short period of time.

- If the battery is subjected to a prolonged or frequent overvoltage, it leads to the ageing of the battery, which may lead to the earlier failure of the battery. The other occurrences may be the thermal runaway, generation of heat or increased amount of hydrogen gas and the depletion of fluid in case of valve regulated batteries.

- If the value of the charging voltage drops below the minimum recommended float voltage of the battery, the battery does not receive sufficient charging current to offset internal losses, resulting in a gradual loss of capacity.
  - If a lead acid battery is subjected to a continuous undervoltage, heavy sulfation occurs on the plates, which leads to the loss of the battery capacity.

12.9 Insulation gas monitoring function SSIMG

12.9.1 Identification

Function description	IEC 61850 identification	IEC 60617 identification	ANSI/IEEE C37.2 device number
Insulation gas monitoring function	SSIMG	-	63

12.9.2 Application

Insulation gas monitoring function (SSIMG) is used for monitoring the circuit breaker condition. Proper arc extinction by the compressed gas in the circuit breaker is very important. When the pressure becomes too low compared to the required value, the circuit breaker operation gets blocked to minimize the risk of internal failure. Binary information based on the gas pressure in the circuit breaker is used as input signals to the function. In addition to that, the function generates alarms based on received information.

12.10 Insulation liquid monitoring function SSIML

12.10.1 Identification

Function description	IEC 61850 identification	IEC 60617 identification	ANSI/IEEE C37.2 device number
Insulation liquid monitoring function	SSIML	-	71

12.10.2 Application

Insulation liquid monitoring function (SSIML) is used for monitoring the circuit breaker condition. Proper arc extinction by the compressed oil in the circuit breaker is very important. When the level becomes too low, compared to the required value, the circuit breaker operation is blocked to minimize the risk of internal failures. Binary information based on the oil level in the circuit breaker is used as input signals to the function. In addition to that, the function generates alarms based on received information.

12.11 Circuit breaker condition monitoring SSCBR

12.11.1 Identification

Function description	IEC 61850 identification	IEC 60617 identification	ANSI/IEEE C37.2 device number
Circuit breaker condition monitoring	SSCBR	-	-

12.11.2 Application

SSCBR includes different metering and monitoring subfunctions.

Circuit breaker status

Circuit breaker status monitors the position of the circuit breaker, that is, whether the breaker is in an open, closed or intermediate position.

Circuit breaker operation monitoring

The purpose of the circuit breaker operation monitoring is to indicate that the circuit breaker has not been operated for a long time. The function calculates the number of days the circuit breaker has remained inactive, that is, has stayed in the same open or closed state. There is also the possibility to set an initial inactive day.

Breaker contact travel time

High travelling times indicate the need for maintenance of the circuit breaker mechanism. Therefore, detecting excessive travelling time is needed. During the opening cycle operation, the main contact starts opening. The auxiliary contact A opens, the auxiliary contact B closes, and the main contact reaches its opening position. During the closing cycle, the first main contact starts closing. The auxiliary contact B opens, the auxiliary contact A closes, and the main contact reaches its close position. The travel times are calculated based on the state changes of the auxiliary contacts and the adding correction factor to consider the time difference of the main contact's and the auxiliary contact's position change.

Operation counter

Routine maintenance of the breaker, such as lubricating breaker mechanism, is generally based on a number of operations. A suitable threshold setting, to raise an alarm when the number of operation cycle exceeds the set limit, helps preventive maintenance. This can also be used to indicate the requirement for oil sampling for dielectric testing in case of an oil circuit breaker.

The change of state can be detected from the binary input of the auxiliary contact. There is a possibility to set an initial value for the counter which can be used to initialize this functionality after a period of operation or in case of refurbished primary equipment.

Accumulation of I^yt

Accumulation of I^yt calculates the accumulated energy ΣI^yt where the factor y is known as the current exponent. The factor y depends on the type of the circuit breaker. For oil circuit breakers the factor y is normally 2. In case of a high-voltage system, the factor y can be 1.4...1.5.

Remaining life of the breaker

Every time the breaker operates, the life of the circuit breaker reduces due to wearing. The wearing in the breaker depends on the tripping current, and the remaining life of the breaker is estimated from the circuit breaker trip curve provided by the manufacturer.

Example for estimating the remaining life of a circuit breaker

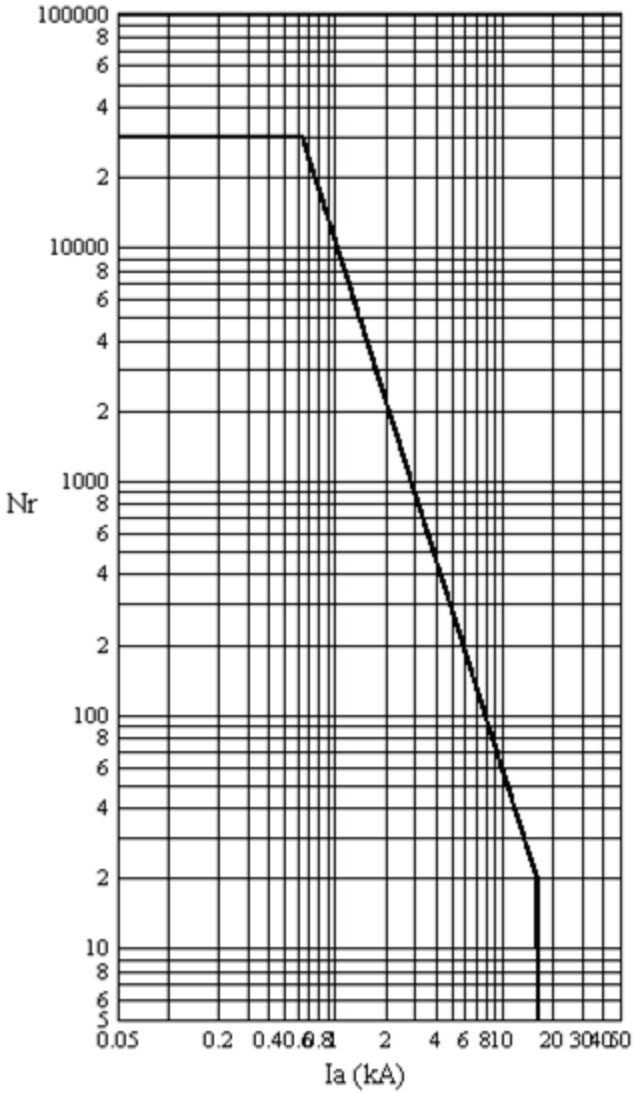

Figure 52: Trip Curves for a typical 12 kV, 630 A, 16 kA vacuum interrupter

Nr	the number of closing-opening operations allowed for the circuit breaker
Ia	the current at the time of tripping of the circuit breaker

Calculation of Directional Coefficient

The directional coefficient is calculated according to the formula:

$$Directional\,Coef = \frac{\log\left(\frac{B}{A}\right)}{\log\left(\frac{I_f}{I_r}\right)} = -2.2609$$

(Equation 30)

I_r	Rated operating current = 630 A
I_f	Rated fault current = 16 kA
A	Op number rated = 30000
B	Op number fault = 20

Calculation for estimating the remaining life

The equation shows that there are 30,000 possible operations at the rated operating current of 630 A and 20 operations at the rated fault current 16 kA. Therefore, if the tripping current is 10 kA, one operation at 10 kA is equivalent to 30,000/500=60 operations at the rated current. It is also assumed that prior to this tripping, the remaining life of the circuit breaker is 15,000 operations. Therefore, after one operation of 10 kA, the remaining life of the circuit breaker is 15,000-60=14,940 at the rated operating current.

Spring charging time indication

For normal operation of the circuit breaker, the circuit breaker spring should be charged within a specified time. Therefore, detecting long spring charging time indicates that it is time for the circuit breaker maintenance. The last value of the spring charging time can be used as a service value.

Gas pressure supervision

The gas pressure supervision monitors the gas pressure inside the arc chamber. When the pressure becomes too low compared to the required value, the circuit breaker operations are locked. A binary input is available based on the pressure levels in the function, and alarms are generated based on these inputs.

Section 13 Metering

13.1 Pulse counter PCGGIO

13.1.1 Identification

Function description	IEC 61850 identification	IEC 60617 identification	ANSI/IEEE C37.2 device number
Pulse counter	PCGGIO	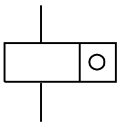	-

13.1.2 Application

Pulse counter (PCGGIO) function counts externally generated binary pulses, for instance pulses coming from an external energy meter, for calculation of energy consumption values. The pulses are captured by the binary input module (BIO), and read by the PCGGIO function. The number of pulses in the counter is then reported via the station bus to the substation automation system or read via the station monitoring system as a service value. When using IEC 61850–8–1, a scaled service value is available over the station bus.

The normal use for this function is the counting of energy pulses from external energy meters. An optional number of inputs from the binary input module in IED can be used for this purpose with a frequency of up to 10 Hz. PCGGIO can also be used as a general purpose counter.

13.1.3 Setting guidelines

From PCM600, these parameters can be set individually for each pulse counter:

- *Operation*: *Off*/*On*
- *tReporting*: *0-3600s*
- *EventMask*: *NoEvents*/*ReportEvents*

The configuration of the inputs and outputs of PCGGIO function block is made with PCM600.

On the binary input output module (BIO), the debounce filter default time is set to 5 ms, that is, the counter suppresses pulses with a pulse length less than 5 ms. The

binary input channels on the binary input output module (BIO) have individual settings for debounce time, oscillation count and oscillation time. The values can be changed in the local HMI and PCM600 under **Main menu/Configuration/I/O modules**

The setting isindividual for all input channels on the binary input output module (BIO), that is, if changes of the limits are made for inputs not connected to the pulse counter, it will not influence the inputs used for pulse counting.

13.2 Energy calculation and demand handling EPTMMTR

13.2.1 Identification

Function description	IEC 61850 identification	IEC 60617 identification	ANSI/IEEE C37.2 device number
Energy calculation and demand handling	ETPMMTR	Wh↔	-

13.2.2 Application

Energy calculation and demand handling function ETPMMTR is intended for statistics of the forward and reverse active and reactive energy. It has a high accuracy basically given by the measurements function (CVMMXN). This function has a site calibration possibility to further increase the total accuracy.

The function is connected to the instantaneous outputs of (CVMMXN) as shown in figure 53.

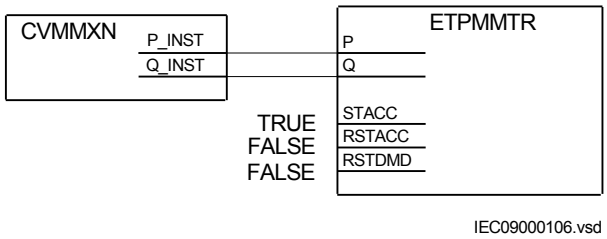

Figure 53: Connection of energy calculation and demand handling function ETPMMTR to the measurements function (CVMMXN)

The energy values can be read through communication in MWh and MVarh in monitoring tool of PCM600 and/or alternatively the values can be presented on the local HMI. The local HMI graphical display is configured with PCM600 Graphical

display editor tool (GDE) with a measuring value which is selected to the active and reactive component as preferred. All four values can also be presented.

Maximum demand values are presented in MWh or MVarh in the same way.

Alternatively, the values can be presented with use of the pulse counters function (PCGGIO). The output values are scaled with the pulse output setting values *EAFAccPlsQty*, *EARAccPlsQty*, *ERFAccPlsQty* and *ERRAccPlsQty* of the energy metering function and then the pulse counter can be set-up to present the correct values by scaling in this function. Pulse counter values can then be presented on the local HMI in the same way and/or sent to the SA system through communication where the total energy then is calculated by summation of the energy pulses. This principle is good for very high values of energy as the saturation of numbers else will limit energy integration to about one year with 50 kV and 3000 A. After that the accumulation will start on zero again.

13.2.3 Setting guidelines

The parameters are set via the local HMI or PCM600.

The following settings can be done for the energy calculation and demand handling function ETPMMTR:

GlobalBaseSel: Selects the global base value group used by the function to define (*IBase*), (*UBase*) and (*SBase*).

Operation: *Off*/*On*

tEnergy: Time interval when energy is measured.

StartAcc: *Off*/*On* is used to switch the accumulation of energy on and off.

The input signal STACC is used to start accumulation. Input signal STACC cannot be used to halt accumulation. The energy content is reset every time STACC is activated. STACC can for example, be used when an external clock is used to switch two active energy measuring function blocks on and off to have indication of two tariffs.

tEnergyOnPls: gives the pulse length ON time of the pulse. It should be at least *100* ms when connected to the Pulse counter function block. Typical value can be *100* ms.

tEnergyOffPls: gives the OFF time between pulses. Typical value can be *100* ms.

EAFAccPlsQty and *EARAccPlsQty*: gives the MWh value in each pulse. It should be selected together with the setting of the Pulse counter (PCGGIO) settings to give the correct total pulse value.

ERFAccPlsQty and *ERRAccPlsQty*: gives the MVarh value in each pulse. It should be selected together with the setting of the Pulse counter (PCGGIO) settings to give the correct total pulse value.

For the advanced user there are a number of settings for direction, zero clamping, max limit, and so on. Normally, the default values are suitable for these parameters.

Section 14 Station communication

14.1 IEC61850-8-1 communication protocol

14.1.1 Identification

Function description	IEC 61850 identification	IEC 60617 identification	ANSI/IEEE C37.2 device number
IEC 61850-8-1 communication protocol	IEC 61850-8-1	-	-

14.1.2 Application

IEC 61850-8-1 communication protocol allows vertical communication to HSI clients and allows horizontal communication between two or more intelligent electronic devices (IEDs) from one or several vendors to exchange information and to use it in the performance of their functions and for correct co-operation.

GOOSE (Generic Object Oriented Substation Event), which is a part of IEC 61850–8–1 standard, allows the IEDs to communicate state and control information amongst themselves, using a publish-subscribe mechanism. That is, upon detecting an event, the IED(s) use a multi-cast transmission to notify those devices that have registered to receive the data. An IED can, by publishing a GOOSE message, report its status. It can also request a control action to be directed at any device in the network.

Figure 54 shows the topology of an IEC 61850–8–1 configuration. IEC 61850–8–1 specifies only the interface to the substation LAN. The LAN itself is left to the system integrator.

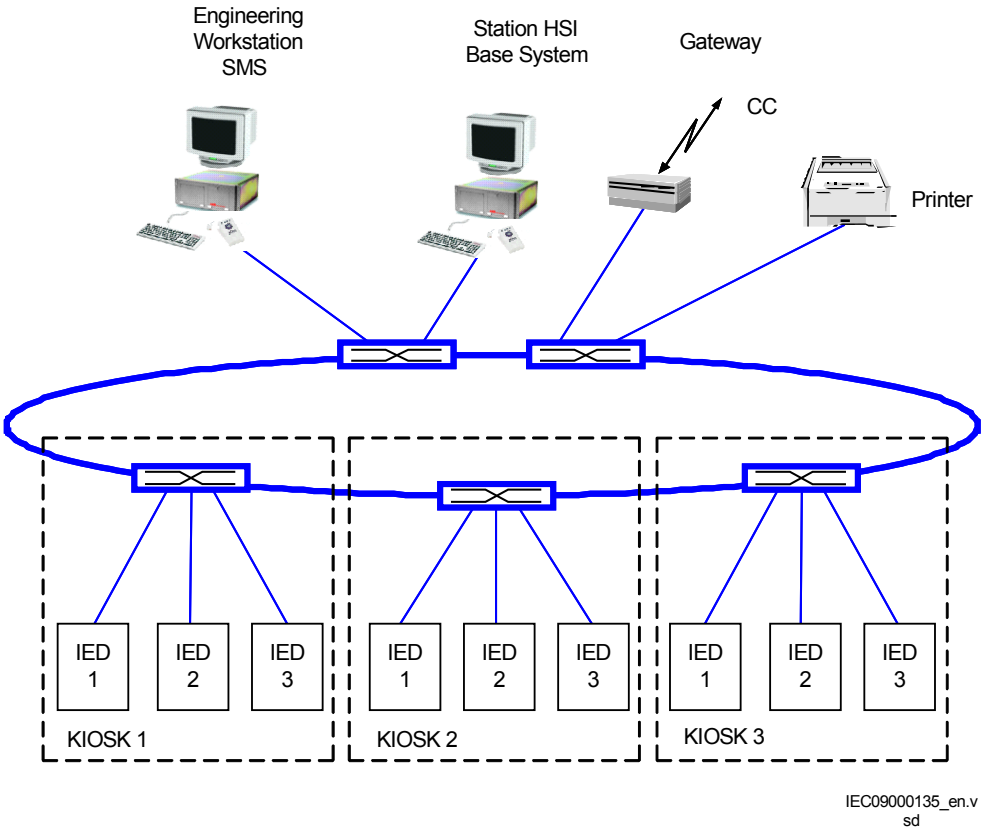

Figure 54: Example of a communication system with IEC 61850–8–1

Figure 55 shows the GOOSE peer-to-peer communication.

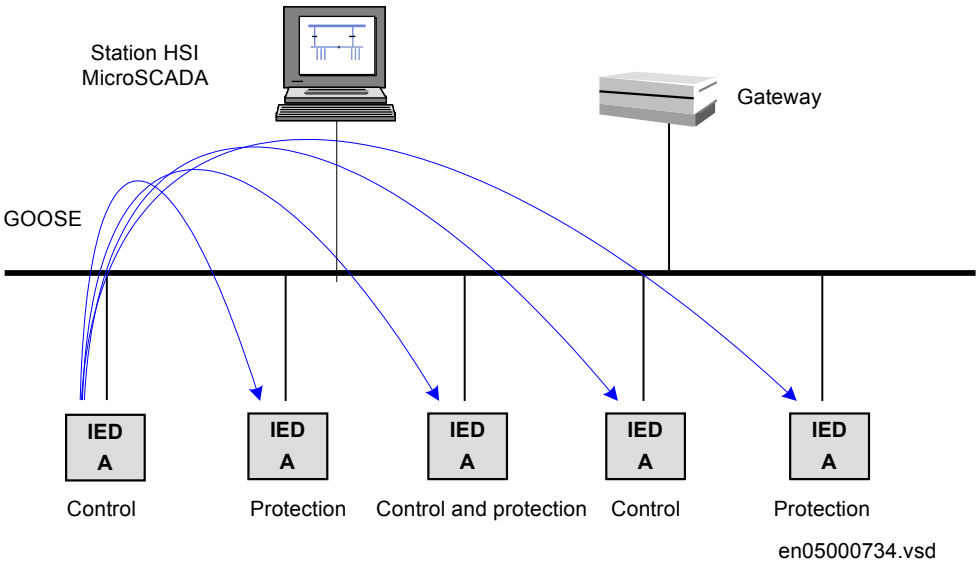

Figure 55: Example of a broadcasted GOOSE message

14.1.2.1 Horizontal communication via GOOSE

GOOSE messages are sent in horizontal communication between the IEDs. The information, which is exchanged, is used for station wide interlocking, breaker failure protection, busbar voltage selection and so on.

The simplified principle is shown in Figure 56 and can be described as follows. When IED1 has decided to transmit the data set it forces a transmission via the station bus. All other IEDs receive the data set, but only those who have this data set in their address list will take it and keep it in an input container. It is defined, that the receiving IED will take the content of the received data set and makes it available for the application configuration.

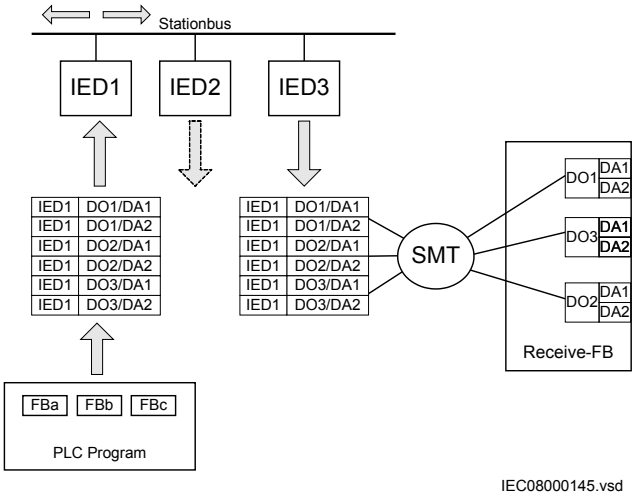

Figure 56: SMT: GOOSE principle and signal routing with SMT

Special function blocks take the data set and present it via the function block as output signals for application functions in the application configuration. Different GOOSE receive function blocks are available for the specific tasks.

SMT links the different data object attributes (for example stVal or magnitude) to the output signal to make it available for functions in the application configuration. When a matrix cell array is marked red the IEC 61850–8–1 data attribute type does not fit together, even if the GOOSE receive function block is the partner. SMT checks this on the content of the received data set. See Figure 57

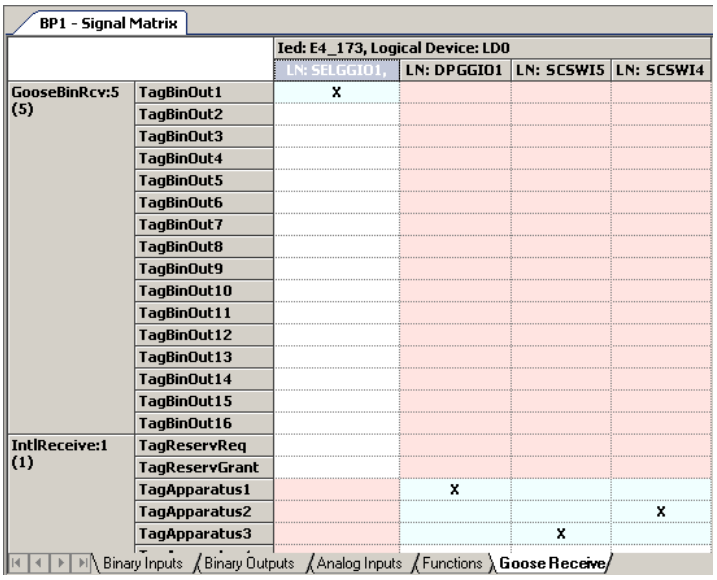

IEC08000174.vsd

Figure 57: SMT: GOOSE marshalling with SMT

GOOSE receive function blocks extract process information, received by the data set, into single attribute information that can be used within the application configuration. Crosses in the SMT matrix connect received values to the respective function block signal in SMT, see Figure 58

The corresponding quality attribute is automatically connected by SMT. This quality attribute is available in ACT, through the outputs of the available GOOSE function blocks.

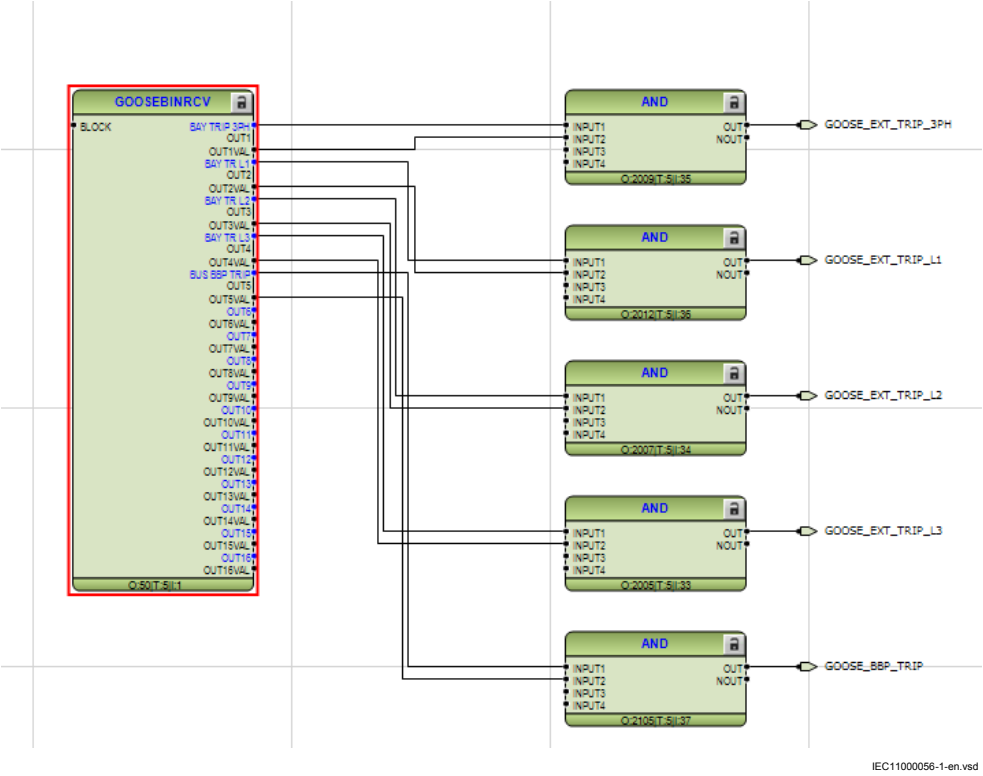

Figure 58: SMT: GOOSE receive function block with converted signals

14.1.3 Setting guidelines

There are two settings related to the IEC 61850–8–1 protocol:

Operation User can set IEC 61850 communication to *On* or *Off*.

GOOSE has to be set to the Ethernet link where GOOSE traffic shall be send and received.

IEC 61850–8–1 specific data (logical nodes etc.) per included function in an IED can be found in the communication protocol manual for IEC 61850–8–1.

14.2 DNP3 protocol

DNP3 (Distributed Network Protocol) is a set of communications protocols used to communicate data between components in process automation systems. For a detailed description of the DNP3 protocol, see the DNP3 Communication protocol manual.

14.3 IEC 60870-5-103 communication protocol

IEC 60870-5-103 is an unbalanced (master-slave) protocol for coded-bit serial communication exchanging information with a control system, and with a data transfer rate up to 19200 bit/s. In IEC terminology, a primary station is a master and a secondary station is a slave. The communication is based on a point-to-point principle. The master must have software that can interpret IEC 60870-5-103 communication messages.

The Communication protocol manual for IEC 60870-5-103 includes the 650 series vendor specific IEC 60870-5-103 implementation.

IEC 60870-5-103 protocol can be configured to use either the optical serial or RS485 serial communication interface on the COM05 communication module. The functions Operation selection for optical serial (OPTICALPROT) and Operation selection for RS485 (RS485PROT) are used to select the communication interface.

See the Engineering manual for IEC103 60870-5-103 engineering procedures in PCM600.

The functions IEC60870-5-103 Optical serial communication (OPTICAL103) and IEC60870-5-103 serial communication for RS485 (RS485103) are used to configure the communication parameters for either the optical serial or RS485 serial communication interfaces.

Section 15 Basic IED functions

15.1 Self supervision with internal event list

15.1.1 Identification

Function description	IEC 61850 identification	IEC 60617 identification	ANSI/IEEE C37.2 device number
Internal error signal	INTERRSIG	-	-
Internal event list	SELFSUPEVLST	-	-

15.1.2 Application

The protection and control IEDs have many functions included . Self supervision with internal event list (SELFSUPEVLST) and internal error signals (INTERRSIG) function provide supervision of the IED. The fault signals make it easier to analyze and locate a fault.

Both hardware and software supervision is included and it is also possible to indicate possible faults through a hardware contact on the power supply module and/ or through the software communication.

Internal events are generated by the built-in supervisory functions. The supervisory functions supervise the status of the various modules in the IED and, in case of failure, a corresponding event is generated. Similarly, when the failure is corrected, a corresponding event is generated.

The event list is updated every 10s hence, an event will not be visible in the event list as soon as it is created.

Apart from the built-in supervision of the various modules, events are also generated when the status changes for the:

- built-in real time clock (in operation/out of order).
- external time synchronization (in operation/out of order).
- Change lock (on/off)

Events are also generated:

- whenever any setting in the IED is changed.

The internal events are time tagged with a resolution of 1 ms and stored in a list. The list can store up to 40 events. The list is based on the FIFO principle, that is, when it is full, the oldest event is overwritten. The list can be cleared via the local HMI .

The list of internal events provides valuable information, which can be used during commissioning and fault tracing.

15.2 Time synchronization

15.2.1 Identification

Function description	IEC 61850 identification	IEC 60617 identification	ANSI/IEEE C37.2 device number
Time synchronization	TIMESYNCHGEN	-	-

Function description	IEC 61850 identification	IEC 60617 identification	ANSI/IEEE C37.2 device number
Time system, summer time begins	DSTBEGIN	-	-

Function description	IEC 61850 identification	IEC 60617 identification	ANSI/IEEE C37.2 device number
Time system, summer time ends	DSTEND	-	-

Function description	IEC 61850 identification	IEC 60617 identification	ANSI/IEEE C37.2 device number
Time synchronization via IRIG-B	IRIG-B	-	-

Function description	IEC 61850 identification	IEC 60617 identification	ANSI/IEEE C37.2 device number
Time synchronization via SNTP	SNTP	-	-

Function description	IEC 61850 identification	IEC 60617 identification	ANSI/IEEE C37.2 device number
Time zone from UTC	TIMEZONE	-	-

15.2.2 Application

Use a common global source for example GPS time synchronization inside each substation as well as inside the area of the utility responsibility to achieve a

common time base for the IEDs in a protection and control system. This makes comparison and analysis of events and disturbance data between all IEDs in the power system possible.

Time-tagging of internal events and disturbances are an excellent help when evaluating faults. Without time synchronization, only the events within the IED can be compared to one another. With time synchronization, events and disturbances within the entire station, and even between line ends, can be compared during evaluation.

In the IED, the internal time can be synchronized from a number of sources:

- SNTP
- IRIG-B
- DNP
- IEC60870-5-103

Micro SCADA OPC server should not be used as a time synchronization source.

15.2.3 Setting guidelines

System time

The time is only possible to set inside the IED via the local HMI by navigating to **Configuration/Time/SYSTEMTIME** with year, month, day, hour, minute and second.

Synchronization

With external time synchronization the setting how to synchronize for the real-time clock (TIME) are set via local HMI or PCM600.

TimeSynch

The setting *TIMESYNCGEN* is used to set the source of the time synchronization. The setting alternatives are:

CoarseSyncSrc which can have the following values:

- *Off*
- *SNTP*
- *DNP*
- *IEC60870-5-103*

FineSyncSource which can have the following values:

- *Off*
- *SNTP*
- *IRIG-B*

The parameter *SyncMaster* defines if the IED is a master, or not a master for time synchronization in a system of IEDs connected in a communication network (IEC61850-8-1). The *SyncMaster* can have the following values:

- *Off*
- *SNTP -Server*

The time synchronization fine tunes the clock.

IEC 60870-5-103 time synchronization

An IED with IEC 60870-5-103 protocol can be used for time synchronization, but for accuracy reasons, it is not recommended. In some cases, however, this kind of synchronization is needed, for example, when no other synchronization is available.

First, set the IED to be synchronized via IEC 60870-5-103 either from **IED Configuration/Time/Synchronization/TIMESYNCHGEN:1** in PST or from the local HMI.

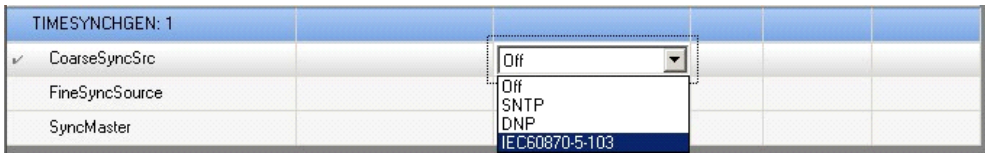

Figure 59: Settings under TIMESYNCHGEN:1 in PST

Only *CoarseSyncSrc* can be set to IEC 60870-5-103, not *FineSyncSource*.

After setting up the time synchronization source, the user must check and modify the IEC 60870-5-103 time synchronization specific settings, under: **IED Configuration/Communication/Station communication/IEC60870-5-103:1**.

- *MasterTimeDomain* specifies the format of the time sent by the master. Format can be:
  - Coordinated Universal Time (*UTC*)
  - Local time set in the master (*Local*)
  - Local time set in the master adjusted according to daylight saving time (*Local with DST*)
- *TimeSyncMode* specifies the time sent by the IED. The time synchronisation is done using the following ways:
  - *IEDTime*: The IED sends the messages with its own time.
  - *LinMasTime*: The IED measures the offset between its own time and the master time, and applies the same offset for the messages sent as in the

IEDTimeSkew. But in *LinMasTime* it applies the time changes occurred between two synchronised messages.
    - *IEDTimeSkew*: The IED measures the offset in between its own time and the master time and applies the same offset for the messages sent.
- *EvalTimeAccuracy* evaluates time accuracy for invalid time. Specifies the accuracy of the synchronization (5, 10, 20 or 40 ms). If the accuracy is less than the specified value, the “Bad Time” flag is raised. To accommodate those masters that are really bad in time sync, the *EvalTimeAccuracy* can be set to *Off*.

According to the standard, the “Bad Time” flag is reported when synchronization has been omitted in the protection for >23 h.

15.3 Parameter setting group handling

15.3.1 Identification

Function description	IEC 61850 identification	IEC 60617 identification	ANSI/IEEE C37.2 device number
Setting group handling	SETGRPS	-	-
Parameter setting groups	ACTVGRP	-	-

15.3.2 Application

Four different groups of settings are available to optimize IED operation for different power system conditions. By creating and switching between fine tuned setting sets, either from the local HMI or configurable binary inputs, results in a highly adaptable IED that can cope with a variety of power system scenarios.

Different conditions in networks with different voltage levels require highly adaptable protection and control IEDs to best provide for dependability, security and selectivity requirements. Protection IEDs operate with a higher degree of availability, especially, if the setting values of their parameters are continuously optimized according to the conditions in the power system.

Operational departments can plan for different operating conditions in the primary power system equipment. The protection engineer can prepare the necessary optimized and pre-tested settings in advance for different protection functions.

The four different groups of setting parameters are available in the IED. Any of them can be activated through different inputs by means of external programmable binary or internal control signals.

15.3.3 Setting guidelines

The setting *ActiveSetGrp*, is used to select which parameter group to be active. The active group can also be selected with configured input to the function block ACTVGRP.

The parameter *MaxNoSetGrp* defines the maximum number of setting groups in use to switch between. Only the selected number of setting groups will be available in the Parameter Setting tool (PST) for activation with the ACTVGRP function block.

15.4 Test mode functionality TESTMODE

15.4.1 Identification

Function description	IEC 61850 identification	IEC 60617 identification	ANSI/IEEE C37.2 device number
Test mode functionality	TESTMODE	-	-

15.4.2 Application

The protection and control IEDs may have a complex configuration with many included functions. To make the testing procedure easier, the IEDs include the feature that allows individual blocking of all functions except the function(s) the shall be tested.

This means that it is possible to see when a function is activated or trips. It also enables the user to follow the operation of several related functions to check correct functionality and to check parts of the configuration, and so on.

15.4.3 Setting guidelines

There are two possible ways to place the IED in the *TestMode= On*” state. This means that if the IED is set to normal operation (*TestMode = Off*), but the functions are still shown being in the test mode, the input signal INPUT on the TESTMODE function block must be activated in the configuration.

Forcing of binary output signals is only possible when the IED is in test mode.

15.5 Change lock CHNGLCK

15.5.1 Identification

Function description	IEC 61850 identification	IEC 60617 identification	ANSI/IEEE C37.2 device number
Change lock function	CHNGLCK	-	-

15.5.2 Application

Change lock function CHNGLCK is used to block further changes to the IED configuration once the commissioning is complete. The purpose is to make it impossible to perform inadvertent IED configuration and setting changes.

However, when activated, CHNGLCK will still allow the following actions that does not involve reconfiguring of the IED:

- Monitoring
- Reading events
- Resetting events
- Reading disturbance data
- Clear disturbances
- Reset LEDs
- Reset counters and other runtime component states
- Control operations
- Set system time
- Enter and exit from test mode
- Change of active setting group

The binary input controlling the function is defined in ACT or SMT. The CHNGLCK function is configured using ACT.

LOCK	Binary input signal that will activate/deactivate the function, defined in ACT or SMT.
ACTIVE	Output status signal
OVERRIDE	Set if function is overridden

When CHNGLCK has a logical one on its input, then all attempts to modify the IED configuration and setting will be denied and the message "Error: Changes blocked" will be displayed on the local HMI; in PCM600 the message will be "Operation denied by active ChangeLock". The CHNGLCK function should be configured so that it is controlled by a signal from a binary input card. This guarantees that by setting that signal to a logical zero, CHNGLCK is deactivated. If any logic is included in the signal path to the CHNGLCK input, that logic must be

designed so that it cannot permanently issue a logical one to the CHNGLCK input. If such a situation would occur in spite of these precautions, then please contact the local ABB representative for remedial action.

15.5.3 Setting guidelines

The Change lock function CHNGLCK does not have any parameters available in the local HMI or PCM600.

15.6 IED identifiers TERMINALID

15.6.1 Identification

Function description	IEC 61850 identification	IEC 60617 identification	ANSI/IEEE C37.2 device number
IED identifiers	TERMINALID	-	-

15.6.2 Application

15.6.2.1 Customer specific settings

The customer specific settings are used to give the IED a unique name and address. The settings are used by a central control system to communicate with the IED. The customer specific identifiers are found in the local HMI under **Configuration/ Power system/Identifiers/TERMINALID**

The settings can also be made from PCM600. For more information about the available identifiers, see the technical manual.

Use only characters A - Z, a - z and 0 - 9 in station, unit and object names.

15.7 Product information PRODINF

15.7.1 Identification

Function description	IEC 61850 identification	IEC 60617 identification	ANSI/IEEE C37.2 device number
Product information	PRODINF	-	-

15.7.2 Application

15.7.2.1 Factory defined settings

The factory defined settings are very useful for identifying a specific version and very helpful in the case of maintenance, repair, interchanging IEDs between different Substation Automation Systems and upgrading. The factory made settings can not be changed by the customer. They can only be viewed. The settings are found in the local HMI under **Main menu/Diagnostics/IED status/Product identifiers**

The following identifiers are available:

- IEDProdType
  - Describes the type of the IED (like REL, REC or RET). Example: *REL650*
- ProductVer
  - Describes the product version. Example: *1.2.3*

1	is the Major version of the manufactured product this means, new platform of the product
2	is the Minor version of the manufactured product this means, new functions or new hardware added to the product
3	is the Major revision of the manufactured product this means, functions or hardware is either changed or enhanced in the product

- ProductDef
  - Describes the release number, from the production. Example: *1.2.3.4* where;

1	is the Major version of the manufactured product this means, new platform of the product
2	is the Minor version of the manufactured product this means, new functions or new hardware added to the product
3	is the Major revision of the manufactured product this means, functions or hardware is either changed or enhanced in the product
4	is the Minor revision of the manufactured product this means, code is corrected in the product

- SerialNo: the structure of the SerialNo is as follows, for example, T0123456 where

01	is the last two digits in the year when the IED was manufactured that is, 2001
23	is the week number when the IED was manufactured
456	is the sequential number of the IEDs produced during the production week

- OrderingNo: the structure of the OrderingNo is as follows, for example, 1MRK008526-BA. This alphanumeric string has no specific meaning except, that it is used for internal identification purposes within ABB.
- ProductionDate: states the production date in the “YYYY-MM_DD” format.

15.8 Primary system values PRIMVAL

15.8.1 Identification

Function description	IEC 61850 identification	IEC 60617 identification	ANSI/IEEE C37.2 device number
Primary system values	PRIMVAL	-	-

15.8.2 Application

The rated system frequency and phasor rotation are set under **Main menu/ Configuration/ Power system/ Primary values/PRIMVAL** in the local HMI and PCM600 parameter setting tree.

15.9 Signal matrix for analog inputs SMAI

15.9.1 Identification

Function description	IEC 61850 identification	IEC 60617 identification	ANSI/IEEE C37.2 device number
Signal matrix for analog inputs	SMAI_20_x	-	-

15.9.2 Application

Signal matrix for analog inputs function (SMAI), also known as the preprocessor function, processes the analog signals connected to it and gives information about all aspects of the analog signals connected, like the RMS value, phase angle, frequency, harmonic content, sequence components and so on. This information is then used by the respective functions in ACT (for example protection, measurement or monitoring).

The SMAI function is used within PCM600 in direct relation with the Signal Matrix tool or the Application Configuration tool.

The SMAI function blocks for the 650 series of products are possible to set for two cycle times either 5 or 20ms. The function blocks connected to a SMAI function block shall always have the same cycle time as the SMAI block.

15.9.3 Setting guidelines

The parameters for the signal matrix for analog inputs (SMAI) functions are set via the local HMI or via the PCM600.

Every SMAI function block can receive four analog signals (three phases and one neutral value), either voltage or current. SMAI outputs give information about every aspect of the 3ph analog signals acquired (phase angle, RMS value, frequency and frequency derivates, and so on – 244 values in total). Besides the block “group name”, the analog inputs type (voltage or current) and the analog input names that can be set directly in ACT.

GlobalBaseSel: Selects the global base value group used by the function to define (*IBase*), (*UBase*) and (*SBase*).

DFTRefExtOut: Parameter valid only for function block SMAI_20_1:1, SMAI_20_1:2 and SMAI_80_1 .

These 3 SMAI blocks can be used as reference blocks for other SMAI blocks when the output signal SPFCOUT is used for relating other SMAI blocks to a common phase reference block for external output (SPFCOUT function output).

DFTReference: Reference DFT for the block.

These DFT reference block settings decide DFT reference for DFT calculations. The settings *InternalDFTRef* will use fixed DFT reference based on set system frequency. The setting *DFTRefGrpn* (where n is a number from 1 to 12) will use DFT reference from the selected group block numbered n, when own group selected adaptive DFT reference will be used based on calculated signal frequency from own group. The setting *ExternalDFTRef* will use reference based on what is connected to input DFTSPFC.

ConnectionType: Connection type for that specific instance (n) of the SMAI (if it is *Ph-N* or *Ph-Ph*). Depending on connection type setting the not connected *Ph-N* or *Ph-Ph* outputs will be calculated.

Negation: Negation means rotation with 180^0 of the vectors. If the user wants to negate the 3ph signal, it is possible to choose to negate only the phase signals *Negate3Ph*, only the neutral signal *NegateN* or both *Negate3Ph+N*.

MinValFreqMeas: The minimum value of the voltage for which the frequency is calculated, expressed as percent of the voltage in the selected Global Base voltage group (n) (for each instance 1<n<6).

Settings *DFTRefExtOut* and *DFTReference* shall be set to default value *InternalDFTRef* if no VT inputs are available.

Even if the user sets the *AnalogInputType* of a SMAI block to “*Current*”, the *MinValFreqMeas* is still visible. However, using the

current channel values as base for frequency measurement is **not recommendable** for a number of reasons, not last among them being the low level of currents that one can have in normal operating conditions.

Example of adaptive frequency tracking

Task time group 1	
SMAI instance	**3 phase group**
SMAI_20_1:1	1
SMAI_20_2:1	2
SMAI_20_3:1	3
SMAI_20_4:1	4
SMAI_20_5:1	5
SMAI_20_6:1	6
SMAI_20_7:1	7
SMAI_20_8:1	8
SMAI_20_9:1	9
SMAI_20_10:1	10
SMAI_20_11:1	11
SMAI_20_12:1	12

DFTRefGrp7

Task time group 2	
SMAI instance	**3 phase group**
SMAI_20_1:2	1
SMAI_20_2:2	2
SMAI_20_3:2	3
SMAI_20_4:2	4
SMAI_20_5:2	5
SMAI_20_6:2	6
SMAI_20_7:2	7
SMAI_20_8:2	8
SMAI_20_9:2	9
SMAI_20_10:2	10
SMAI_20_11:2	11
SMAI_20_12:2	12

IEC09000029_1_en.vsd

Figure 60: SMAI instances as organized in different task time groups and the corresponding parameter numbers

The example shows a situation with adaptive frequency tracking with one reference selected for all instances. In practice each instance can be adapted to the needs of the actual application.

Example 1

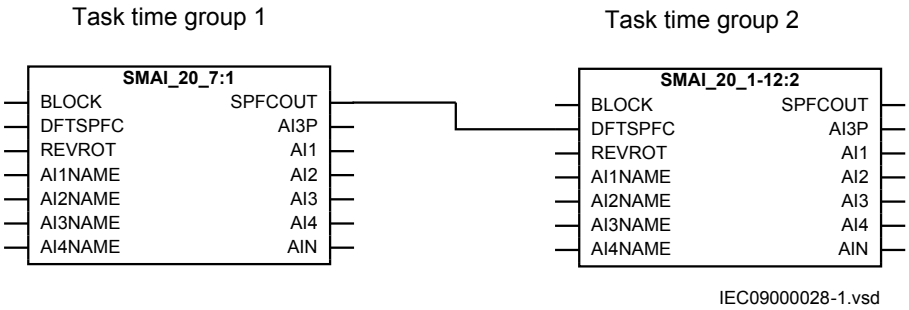

Figure 61: Configuration for using an instance in task time group 1 as DFT reference

Assume instance SMAI_20_7:1 in task time group 1 has been selected in the configuration to control the frequency tracking (For the SMAI_20_x task time groups). Observe that the selected reference instance (i.e. frequency tracking master) must be a voltage type. Observe that positive sequence voltage is used for the frequency tracking feature.

For task time group 1 this gives the following settings (see Figure 60 for numbering):

SMAI_20_7:1: *DFTRefExtOut = DFTRefGrp7* to route SMAI_20_7:1 reference to the SPFCOUT output, *DFTReference = DFTRefGrp7* for SMAI_20_7:1 to use SMAI_20_7:1 as reference (see Figure 61). .

SMAI_20_2:1 - SMAI_20_12:1 *DFTReference = DFTRefGrp7* for SMAI_20_2:1 - SMAI_20_12:1 to use SMAI_20_7:1 as reference.

For task time group 2 this gives the following settings:

SMAI_20_1:2 - SMAI_20_12:2 *DFTReference = ExternalDFTRef* to use DFTSPFC input as reference (SMAI_20_7:1)

15.10 Summation block 3 phase 3PHSUM

15.10.1 Identification

Function description	IEC 61850 identification	IEC 60617 identification	ANSI/IEEE C37.2 device number
Summation block 3 phase	3PHSUM	-	-

15.10.2 Application

Summation block 3 phase function 3PHSUM is used to get the sum of two sets of three-phase analog signals (of the same type) for those IED functions that might need it.

15.10.3 Setting guidelines

The summation block receives the three-phase signals from SMAI blocks. The summation block has several settings.

GlobalBaseSel: Selects the global base value group used by the function to define (*IBase*), (*UBase*) and (*SBase*).

SummationType: Summation type (*Group 1 + Group 2*, *Group 1 - Group 2*, *Group 2 - Group 1* or *–(Group 1 + Group 2)*).

DFTReference: The reference DFT block (*InternalDFT Ref*,*DFTRefGrp1* or *External DFT ref*) .

FreqMeasMinVal: The minimum value of the voltage for which the frequency is calculated, expressed as percent of *UBase* (for each instance x).

15.11 Global base values GBASVAL

15.11.1 Identification

Function description	IEC 61850 identification	IEC 60617 identification	ANSI/IEEE C37.2 device number
Global base values	GBASVAL	-	-

15.11.2 Application

Global base values function (GBASVAL) is used to provide global values, common for all applicable functions within the IED. One set of global values consists of values for current, voltage and apparent power and it is possible to have six different sets.

This is an advantage since all applicable functions in the IED use a single source of base values. This facilitates consistency throughout the IED and also facilitates a single point for updating values when necessary.

Each applicable function in the IED has a parameter, *GlobalBaseSel*, defining one out of the six sets of GBASVAL functions.

15.11.3 Setting guidelines

UBase: Phase-to-phase voltage value to be used as a base value for applicable functions throughout the IED.

IBase: Phase current value to be used as a base value for applicable functions throughout the IED.

SBase: Standard apparent power value to be used as a base value for applicable functions throughout the IED, typically $SBase=\sqrt{3}\cdot UBase\cdot IBase$.

15.12 Authority check ATHCHCK

15.12.1 Identification

Function description	IEC 61850 identification	IEC 60617 identification	ANSI/IEEE C37.2 device number
Authority check	ATHCHCK	-	-

15.12.2 Application

To safeguard the interests of our customers, both the IED and the tools that are accessing the IED are protected, by means of authorization handling. The authorization handling of the IED and the PCM600 is implemented at both access points to the IED:

- local, through the local HMI
- remote, through the communication ports

15.12.2.1 Authorization handling in the IED

At delivery the default user is the SuperUser. No Log on is required to operate the IED until a user has been created with the IED User Management..

Once a user is created and written to the IED, that user can perform a Log on, using the password assigned in the tool. Then the default user will be Guest.

If there is no user created, an attempt to log on will display a message box: “No user defined!”

If one user leaves the IED without logging off, then after the timeout (set in **Main menu/Configuration/HMI/Screen/1:SCREEN**) elapses, the IED returns to Guest state, when only reading is possible. By factory default, the display timeout is set to 60 minutes.

If one or more users are created with the IED User Management and written to the IED, then, when a user attempts a Log on by pressing the key or when the user attempts to perform an operation that is password protected, the Log on window opens.

The cursor is focused on the User identity field, so upon pressing the key, one can change the user name, by browsing the list of users, with the “up” and “down” arrows. After choosing the right user name, the user must press the key again. When it comes to password, upon pressing the key, the following characters will show up: “********”. The user must scroll for every letter in the password. After all the letters are introduced (passwords are case sensitive) choose OK and press the key again.

At successful Log on, the local HMI shows the new user name in the status bar at the bottom of the LCD. If the Log on is OK, when required to change for example a password protected setting, the local HMI returns to the actual setting folder. If the Log on has failed, an "Error Access Denied" message opens. If a user enters an incorrect password three times, that user will be blocked for ten minutes before a new attempt to log in can be performed. The user will be blocked from logging in, both from the local HMI and PCM600. However, other users are to log in during this period.

15.13 Authority status ATHSTAT

15.13.1 Identification

Function description	IEC 61850 identification	IEC 60617 identification	ANSI/IEEE C37.2 device number
Authority status	ATHSTAT	-	-

15.13.2 Application

Authority status (ATHSTAT) function is an indication function block, which informs about two events related to the IED and the user authorization:

- the fact that at least one user has tried to log on wrongly into the IED and it was blocked (the output USRBLKED)
- the fact that at least one user is logged on (the output LOGGEDON)

The two outputs of ATHSTAT function can be used in the configuration for different indication and alarming reasons, or can be sent to the station control for the same purpose.

15.14 Denial of service

15.14.1 Identification

Function description	IEC 61850 identification	IEC 60617 identification	ANSI/IEEE C37.2 device number
Denial of service, frame rate control for front port	DOSFRNT	-	-

Function description	IEC 61850 identification	IEC 60617 identification	ANSI/IEEE C37.2 device number
Denial of service, frame rate control for LAN1 port	DOSLAN1	-	-

15.14.2 Application

The denial of service functions (DOSFRNT,DOSLAN1 and DOSSCKT) are designed to limit the CPU load that can be produced by Ethernet network traffic on the IED. The communication facilities must not be allowed to compromise the primary functionality of the device. All inbound network traffic will be quota controlled so that too heavy network loads can be controlled. Heavy network load might for instance be the result of malfunctioning equipment connected to the network.

DOSFRNT, DOSLAN1 and DOSSCKT measures the IED load from communication and, if necessary, limit it for not jeopardizing the IEDs control and protection functionality due to high CPU load. The function has the following outputs:

- LINKUP indicates the Ethernet link status
- WARNING indicates that communication (frame rate) is higher than normal
- ALARM indicates that the IED limits communication

15.14.3 Setting guidelines

The function does not have any parameters available in the local HMI or PCM600.

Section 16 Requirements

16.1 Current transformer requirements

The performance of a protection function will depend on the quality of the measured current signal. Saturation of the current transformer (CT) will cause distortion of the current signal and can result in a failure to operate or cause unwanted operations of some functions. Consequently CT saturation can have an influence on both the dependability and the security of the protection. This protection IED has been designed to permit heavy CT saturation with maintained correct operation.

16.1.1 Current transformer classification

To guarantee correct operation, the current transformers (CTs) must be able to correctly reproduce the current for a minimum time before the CT will begin to saturate. To fulfill the requirement on a specified time to saturation the CTs must fulfill the requirements of a minimum secondary e.m.f. that is specified below.

There are several different ways to specify CTs. Conventional magnetic core CTs are usually specified and manufactured according to some international or national standards, which specify different protection classes as well. There are many different standards and a lot of classes but fundamentally there are three different types of CTs:

- High remanence type CT
- Low remanence type CT
- Non remanence type CT

The high remanence type has no limit for the remanent flux. This CT has a magnetic core without any airgap and a remanent flux might remain almost infinite time. In this type of transformers the remanence can be up to around 80% of the saturation flux. Typical examples of high remanence type CT are class P, PX, TPS, TPX according to IEC, class P, X according to BS (old British Standard) and non gapped class C, K according to ANSI/IEEE.

The low remanence type has a specified limit for the remanent flux. This CT is made with a small air gap to reduce the remanence to a level that does not exceed 10% of the saturation flux. The small air gap has only very limited influences on the other properties of the CT. Class PR, TPY according to IEC are low remanence type CTs.

The non remanence type CT has practically negligible level of remanent flux. This type of CT has relatively big air gaps in order to reduce the remanence to practically zero level. In the same time, these air gaps reduce the influence of the DC-component from the primary fault current. The air gaps will also decrease the measuring accuracy in the non-saturated region of operation. Class TPZ according to IEC is a non remanence type CT.

Different standards and classes specify the saturation e.m.f. in different ways but it is possible to approximately compare values from different classes. The rated equivalent limiting secondary e.m.f. E_{al} according to the IEC 60044 – 6 standard is used to specify the CT requirements for the IED. The requirements are also specified according to other standards.

16.1.2 Conditions

The requirements are a result of investigations performed in our network simulator. The current transformer models are representative for current transformers of high remanence and low remanence type. The results may not always be valid for non remanence type CTs (TPZ).

The performances of the protection functions have been checked in the range from symmetrical to fully asymmetrical fault currents. Primary time constants of at least 120 ms have been considered at the tests. The current requirements below are thus applicable both for symmetrical and asymmetrical fault currents.

Depending on the protection function phase-to-earth, phase-to-phase and three-phase faults have been tested for different relevant fault positions for example, close in forward and reverse faults, zone 1 reach faults, internal and external faults. The dependability and security of the protection was verified by checking for example, time delays, unwanted operations, directionality, overreach and stability.

The remanence in the current transformer core can cause unwanted operations or minor additional time delays for some protection functions. As unwanted operations are not acceptable at all maximum remanence has been considered for fault cases critical for the security, for example, faults in reverse direction and external faults. Because of the almost negligible risk of additional time delays and the non-existent risk of failure to operate the remanence have not been considered for the dependability cases. The requirements below are therefore fully valid for all normal applications.

It is difficult to give general recommendations for additional margins for remanence to avoid the minor risk of an additional time delay. They depend on the performance and economy requirements. When current transformers of low remanence type (for example, TPY, PR) are used, normally no additional margin is needed. For current transformers of high remanence type (for example, P, PX, TPS, TPX) the small probability of fully asymmetrical faults, together with high remanence in the same direction as the flux generated by the fault, has to be kept in mind at the decision of an additional margin. Fully asymmetrical fault current will be achieved when the fault occurs at approximately zero voltage (0°).

Investigations have shown that 95% of the faults in the network will occur when the voltage is between 40° and 90°. In addition fully asymmetrical fault current will not exist in all phases at the same time.

16.1.3 Fault current

The current transformer requirements are based on the maximum fault current for faults in different positions. Maximum fault current will occur for three-phase faults or single phase-to-earth faults. The current for a single phase-to-earth fault will exceed the current for a three-phase fault when the zero sequence impedance in the total fault loop is less than the positive sequence impedance.

When calculating the current transformer requirements, maximum fault current for the relevant fault position should be used and therefore both fault types have to be considered.

16.1.4 Secondary wire resistance and additional load

The voltage at the current transformer secondary terminals directly affects the current transformer saturation. This voltage is developed in a loop containing the secondary wires and the burden of all relays in the circuit. For earth faults the loop includes the phase and neutral wire, normally twice the resistance of the single secondary wire. For three-phase faults the neutral current is zero and it is just necessary to consider the resistance up to the point where the phase wires are connected to the common neutral wire. The most common practice is to use four wires secondary cables so it normally is sufficient to consider just a single secondary wire for the three-phase case.

The conclusion is that the loop resistance, twice the resistance of the single secondary wire, must be used in the calculation for phase-to-earth faults and the phase resistance, the resistance of a single secondary wire, may normally be used in the calculation for three-phase faults.

As the burden can be considerable different for three-phase faults and phase-to-earth faults it is important to consider both cases. Even in a case where the phase-to-earth fault current is smaller than the three-phase fault current the phase-to-earth fault can be dimensioning for the CT depending on the higher burden.

In isolated or high impedance earthed systems the phase-to-earth fault is not the dimensioning case and therefore the resistance of the single secondary wire always can be used in the calculation, for this case.

16.1.5 General current transformer requirements

The current transformer ratio is mainly selected based on power system data for example, maximum load. However, it should be verified that the current to the protection is higher than the minimum operating value for all faults that are to be

detected with the selected CT ratio. The minimum operating current is different for different functions and normally settable so each function should be checked.

The current error of the current transformer can limit the possibility to use a very sensitive setting of a sensitive residual overcurrent protection. If a very sensitive setting of this function will be used it is recommended that the current transformer should have an accuracy class which have an current error at rated primary current that is less than ±1% (for example, 5P). If current transformers with less accuracy are used it is advisable to check the actual unwanted residual current during the commissioning.

16.1.6 Rated equivalent secondary e.m.f. requirements

With regard to saturation of the current transformer all current transformers of high remanence and low remanence type that fulfill the requirements on the rated equivalent secondary e.m.f. E_{al} below can be used. The characteristic of the non remanence type CT (TPZ) is not well defined as far as the phase angle error is concerned. If no explicit recommendation is given for a specific function we therefore recommend contacting ABB to confirm that the non remanence type can be used.

The CT requirements for the different functions below are specified as a rated equivalent limiting secondary e.m.f. E_{al} according to the IEC 60044-6 standard. Requirements for CTs specified in different ways are given at the end of this section.

16.1.6.1 1 Ph high impedance differential protection

The CTs connected to the IED must have a rated equivalent secondary e.m.f. E_{al} that is larger than or equal to the required equivalent secondary e.m.f. E_{alreq} below:

$$E_{al} \geq E_{alreq} = 2 \cdot U_s = 2 \cdot I_{tmax} \cdot \frac{I_{sn}}{I_{pn}} \cdot (R_{CT} + R_L)$$

where:

U_s	Set operate value to the voltage relay (V)
I_{kmax}	Maximum primary fundamental frequency fault current for through fault current for external faults (A)
I_{pn}	The rated primary CT current (A)
I_{sn}	The rated secondary CT current (A)
R_{CT}	The secondary resistance of the CT (Ω)
R_L	The resistance of the secondary cable from the CT up to a common junction point (Ω). The loop resistance containing the phase and neutral wires, must be used for faults in solidly earthed systems and the resistance of a single-phase wire should be used for faults in high impedance earthed systems.

All CTs to the same protection should have identical turn ratios. Consequently auxiliary CTs cannot normally be used. The IED must be provided with separate cores.

16.1.6.2 Breaker failure protection

The CTs must have a rated equivalent secondary e.m.f. E_{al} that is larger than or equal to the required secondary e.m.f. E_{alreq} below:

$$E_{al} \geq E_{alreq} = 5 \cdot I_{op} \cdot \frac{I_{sn}}{I_{pn}} \cdot \left(R_{CT} + R_L + \frac{S_R}{I_r^2} \right)$$

(Equation 32)

where:

I_{op}	The primary operate value (A)
I_{pn}	The rated primary CT current (A)
I_{sn}	The rated secondary CT current (A)
I_r	The rated current of the protection IED (A)
R_{CT}	The secondary resistance of the CT (Ω)
R_L	The resistance of the secondary cable and additional load (Ω). The loop resistance containing the phase and neutral wires, must be used for faults in solidly earthed systems. The resistance of a single secondary wire should be used for faults in high impedance earthed systems.
S_R	The burden of an IED current input channel (VA). S_R=0.010 VA/channel for I_r=1 A and S_R=0.250 VA/channel for I_r=5 A

16.1.6.3 Non-directional instantaneous and definitive time, phase and residual overcurrent protection

The CTs must have a rated equivalent secondary e.m.f. E_{al} that is larger than or equal to the required secondary e.m.f. E_{alreq} below:

$$E_{al} \geq E_{alreq} = 1,5 \cdot I_{op} \cdot \frac{I_{sn}}{I_{pn}} \cdot \left(R_{CT} + R_L + \frac{S_R}{I_r^2} \right)$$

(Equation 33)

where:

I_{op}	The primary operate value (A)
I_{pn}	The rated primary CT current (A)
I_{sn}	The rated secondary CT current (A)
I_r	The rated current of the protection IED (A)
R_{CT}	The secondary resistance of the CT (Ω)
R_L	The resistance of the secondary cable and additional load (Ω). The loop resistance containing the phase and neutral wires, must be used for faults in solidly earthed systems. The resistance of a single secondary wire should be used for faults in high impedance earthed systems.
S_R	The burden of an IED current input channel (VA). S_R=0.010 VA/channel for I_r=1 A and S_R=0.250 VA/channel for I_r=5 A

16.1.6.4 Non-directional inverse time delayed phase and residual overcurrent protection

The requirement according to Equation 34 and Equation 35 does not need to be fulfilled if the high set instantaneous or definitive time stage is used. In this case Equation 33 is the only necessary requirement.

If the inverse time delayed function is the only used overcurrent protection function the CTs must have a rated equivalent secondary e.m.f. E_{al} that is larger than or equal to the required secondary e.m.f. E_{alreq} below:

$$E_{al} \geq E_{alreq} = 20 \cdot I_{op} \cdot \frac{I_{sn}}{I_{pn}} \cdot \left(R_{CT} + R_L + \frac{S_R}{I_r^2} \right)$$

(Equation 34)

where

I_{op}	The primary current set value of the inverse time function (A)
I_{pn}	The rated primary CT current (A)
I_{sn}	The rated secondary CT current (A)
I_r	The rated current of the protection IED (A)

Table continues on next page

R_{CT}	The secondary resistance of the CT (Ω)
R_L	The resistance of the secondary cable and additional load (Ω). The loop resistance containing the phase and neutral wires, must be used for faults in solidly earthed systems. The resistance of a single secondary wire should be used for faults in high impedance earthed systems.
S_R	The burden of an IED current input channel (VA). S_R=0.010 VA/channel for I_r=1 A and S_R=0.250 VA/channel for I_r=5 A

Independent of the value of I_{op} the maximum required E_{al} is specified according to the following:

$$E_{al} \geq E_{alreq\,max} = I_{k\,max} \cdot \frac{I_{sn}}{I_{pn}} \cdot \left(R_{CT} + R_L + \frac{S_R}{I_r^2} \right)$$

(Equation 35)

where

I_{kmax}	Maximum primary fundamental frequency current for close-in faults (A)

16.1.6.5 Directional phase and residual overcurrent protection

If the directional overcurrent function is used the CTs must have a rated equivalent secondary e.m.f. E_{al} that is larger than or equal to the required equivalent secondary e.m.f. E_{alreq} below:

$$E_{al} \geq E_{alreq} = I_{k\,max} \cdot \frac{I_{sn}}{I_{pn}} \cdot \left(R_{CT} + R_L + \frac{S_R}{I_r^2} \right)$$

(Equation 36)

where:

I_{kmax}	Maximum primary fundamental frequency current for close-in forward and reverse faults (A)
I_{pn}	The rated primary CT current (A)
I_{sn}	The rated secondary CT current (A)
I_r	The rated current of the protection IED (A)
R_{CT}	The secondary resistance of the CT (Ω)
R_L	The resistance of the secondary cable and additional load (Ω). The loop resistance containing the phase and neutral wires, must be used for faults in solidly earthed systems. The resistance of a single secondary wire should be used for faults in high impedance earthed systems.
S_R	The burden of an IED current input channel (VA). S_r=0.010 VA/channel for I_r=1 A and S_r=0.250 VA/channel for I_r=5 A

16.1.7 Current transformer requirements for CTs according to other standards

All kinds of conventional magnetic core CTs are possible to use with the IEDs if they fulfill the requirements corresponding to the above specified expressed as the rated equivalent secondary e.m.f. E_{al} according to the IEC 60044-6 standard. From different standards and available data for relaying applications it is possible to approximately calculate a secondary e.m.f. of the CT comparable with E_{al}. By comparing this with the required secondary e.m.f. E_{alreq} it is possible to judge if the CT fulfills the requirements. The requirements according to some other standards are specified below.

16.1.7.1 Current transformers according to IEC 60044-1, class P, PR

A CT according to IEC 60044-1 is specified by the secondary limiting e.m.f. E_{2max}. The value of the E_{2max} is approximately equal to the corresponding E_{al} according to IEC 60044-6. Therefore, the CTs according to class P and PR must have a secondary limiting e.m.f. E_{2max} that fulfills the following:

$$E_{2\max} > \max E_{alreq}$$

(Equation 37)

16.1.7.2 Current transformers according to IEC 60044-1, class PX, IEC 60044-6, class TPS (and old British Standard, class X)

CTs according to these classes are specified approximately in the same way by a rated knee-point e.m.f. E_{knee} (E_k for class PX, E_{kneeBS} for class X and the limiting secondary voltage U_{al} for TPS). The value of the E_{knee} is lower than the corresponding E_{al} according to IEC 60044-6. It is not possible to give a general relation between the E_{knee} and the E_{al} but normally the E_{knee} is approximately 80 % of the E_{al}. Therefore, the CTs according to class PX, X and TPS must have a rated knee-point e.m.f. E_{knee} that fulfills the following:

$$E_{knee} \approx E_k \approx E_{kneeBS} \approx U_{al} > 0.8 \cdot (\text{maximum of } E_{alreq})$$

(Equation 38)

16.1.7.3 Current transformers according to ANSI/IEEE

Current transformers according to ANSI/IEEE are partly specified in different ways. A rated secondary terminal voltage U_{ANSI} is specified for a CT of class C.

U_{ANSI} is the secondary terminal voltage the CT will deliver to a standard burden at 20 times rated secondary current without exceeding 10 % ratio correction. There are a number of standardized U_{ANSI} values for example, U_{ANSI} is 400 V for a C400 CT. A corresponding rated equivalent limiting secondary e.m.f. E_{alANSI} can be estimated as follows:

$$E_{alANSI} = |20 \cdot I_{sn} \cdot R_{CT} + U_{ANSI}| = |20 \cdot I_{sn} \cdot R_{CT} + 20 \cdot I_{sn} \cdot Z_{bANSI}|$$

(Equation 39)

where:

Z_{bANSI} The impedance (that is, complex quantity) of the standard ANSI burden for the specific C class (Ω)

U_{ANSI} The secondary terminal voltage for the specific C class (V)

The CTs according to class C must have a calculated rated equivalent limiting secondary e.m.f. E_{alANSI} that fulfills the following:

$$E_{alANSI} > \text{maximum of } E_{alreq}$$

(Equation 40)

A CT according to ANSI/IEEE is also specified by the knee-point voltage $U_{kneeANSI}$ that is graphically defined from an excitation curve. The knee-point voltage $U_{kneeANSI}$ normally has a lower value than the knee-point e.m.f. according to IEC and BS. $U_{kneeANSI}$ can approximately be estimated to 75 % of the corresponding E_{al} according to IEC 60044 6. Therefore, the CTs according to ANSI/IEEE must have a knee-point voltage $U_{kneeANSI}$ that fulfills the following:

$$E_{kneeANSI} > 0.75 \cdot (\text{maximum of } E_{alreq})$$

(Equation 41)

16.2 Voltage transformer requirements

The performance of a protection function will depend on the quality of the measured input signal. Transients caused by capacitive voltage transformers (CVTs) can affect some protection functions.

Magnetic or capacitive voltage transformers can be used.

The capacitive voltage transformers (CVTs) should fulfill the requirements according to the IEC 60044–5 standard regarding ferro-resonance and transients. The ferro-resonance requirements of the CVTs are specified in chapter 7.4 of the standard.

The transient responses for three different standard transient response classes, T1, T2 and T3 are specified in chapter 15.5 of the standard. CVTs according to all classes can be used.

The protection IED has effective filters for these transients, which gives secure and correct operation with CVTs.

16.3 SNTP server requirements

16.3.1 SNTP server requirements

The SNTP server to be used is connected to the local network, that is not more than 4-5 switches or routers away from the IED. The SNTP server is dedicated for its task, or at least equipped with a real-time operating system, that is not a PC with SNTP server software. The SNTP server should be stable, that is, either synchronized from a stable source like GPS, or local without synchronization. Using a local SNTP server without synchronization as primary or secondary server in a redundant configuration is not recommended.

Section 17 Glossary

AC	Alternating current
ACT	Application configuration tool within PCM600
A/D converter	Analog-to-digital converter
ADBS	Amplitude deadband supervision
AI	Analog input
ANSI	American National Standards Institute
AR	Autoreclosing
ASCT	Auxiliary summation current transformer
ASD	Adaptive signal detection
AWG	American Wire Gauge standard
BI	Binary input
BOS	Binary outputs status
BR	External bistable relay
BS	British Standards
CAN	Controller Area Network. ISO standard (ISO 11898) for serial communication
CB	Circuit breaker
CCITT	Consultative Committee for International Telegraph and Telephony. A United Nations-sponsored standards body within the International Telecommunications Union.
CCVT	Capacitive Coupled Voltage Transformer
Class C	Protection Current Transformer class as per IEEE/ ANSI
CMPPS	Combined megapulses per second
CMT	Communication Management tool in PCM600
CO cycle	Close-open cycle
Codirectional	Way of transmitting G.703 over a balanced line. Involves two twisted pairs making it possible to transmit information in both directions
COMTRADE	Standard format according to IEC 60255-24
Contra-directional	Way of transmitting G.703 over a balanced line. Involves four twisted pairs, two of which are used for transmitting data in both directions and two for transmitting clock signals

CPU	Central processor unit
CR	Carrier receive
CRC	Cyclic redundancy check
CROB	Control relay output block
CS	Carrier send
CT	Current transformer
CVT	Capacitive voltage transformer
DAR	Delayed autoreclosing
DARPA	Defense Advanced Research Projects Agency (The US developer of the TCP/IP protocol etc.)
DBDL	Dead bus dead line
DBLL	Dead bus live line
DC	Direct current
DFC	Data flow control
DFT	Discrete Fourier transform
DHCP	Dynamic Host Configuration Protocol
DIP-switch	Small switch mounted on a printed circuit board
DI	Digital input
DLLB	Dead line live bus
DNP	Distributed Network Protocol as per IEEE/ANSI Std. 1379-2000
DR	Disturbance recorder
DRAM	Dynamic random access memory
DRH	Disturbance report handler
DSP	Digital signal processor
DTT	Direct transfer trip scheme
EHV network	Extra high voltage network
EIA	Electronic Industries Association
EMC	Electromagnetic compatibility
EMF	(Electric Motive Force)
EMI	Electromagnetic interference
EnFP	End fault protection
EPA	Enhanced performance architecture
ESD	Electrostatic discharge
FCB	Flow control bit; Frame count bit

FOX 20	Modular 20 channel telecommunication system for speech, data and protection signals
FOX 512/515	Access multiplexer
FOX 6Plus	Compact time-division multiplexer for the transmission of up to seven duplex channels of digital data over optical fibers
G.703	Electrical and functional description for digital lines used by local telephone companies. Can be transported over balanced and unbalanced lines
GCM	Communication interface module with carrier of GPS receiver module
GDE	Graphical display editor within PCM600
GI	General interrogation command
GIS	Gas-insulated switchgear
GOOSE	Generic object-oriented substation event
GPS	Global positioning system
HDLC protocol	High-level data link control, protocol based on the HDLC standard
HFBR connector type	Plastic fiber connector
HMI	Human-machine interface
HSAR	High speed autoreclosing
HV	High-voltage
HVDC	High-voltage direct current
IDBS	Integrating deadband supervision
IEC	International Electrical Committee
IEC 60044-6	IEC Standard, Instrument transformers – Part 6: Requirements for protective current transformers for transient performance
IEC 61850	Substation automation communication standard
IEC 61850–8–1	Communication protocol standard
IEEE	Institute of Electrical and Electronics Engineers
IEEE 802.12	A network technology standard that provides 100 Mbits/s on twisted-pair or optical fiber cable
IEEE P1386.1	PCI Mezzanine Card (PMC) standard for local bus modules. References the CMC (IEEE P1386, also known as Common Mezzanine Card) standard for the mechanics and the PCI specifications from the PCI SIG (Special Interest Group) for the electrical EMF (Electromotive force).

IEEE 1686	Standard for Substation Intelligent Electronic Devices (IEDs) Cyber Security Capabilities
IED	Intelligent electronic device
I-GIS	Intelligent gas-insulated switchgear
Instance	When several occurrences of the same function are available in the IED, they are referred to as instances of that function. One instance of a function is identical to another of the same kind but has a different number in the IED user interfaces. The word "instance" is sometimes defined as an item of information that is representative of a type. In the same way an instance of a function in the IED is representative of a type of function.
IP	1. Internet protocol. The network layer for the TCP/IP protocol suite widely used on Ethernet networks. IP is a connectionless, best-effort packet-switching protocol. It provides packet routing, fragmentation and reassembly through the data link layer. 2. Ingression protection, according to IEC standard
IP 20	Ingression protection, according to IEC standard, level 20
IP 40	Ingression protection, according to IEC standard, level 40
IP 54	Ingression protection, according to IEC standard, level 54
IRF	Internal failure signal
IRIG-B:	InterRange Instrumentation Group Time code format B, standard 200
ITU	International Telecommunications Union
LAN	Local area network
LIB 520	High-voltage software module
LCD	Liquid crystal display
LDD	Local detection device
LED	Light-emitting diode
MCB	Miniature circuit breaker
MCM	Mezzanine carrier module
MVB	Multifunction vehicle bus. Standardized serial bus originally developed for use in trains.
NCC	National Control Centre
OCO cycle	Open-close-open cycle
OCP	Overcurrent protection
OLTC	On-load tap changer
OV	Over-voltage

Overreach	A term used to describe how the relay behaves during a fault condition. For example, a distance relay is overreaching when the impedance presented to it is smaller than the apparent impedance to the fault applied to the balance point, that is, the set reach. The relay “sees” the fault but perhaps it should not have seen it.
PCI	Peripheral component interconnect, a local data bus
PCM	Pulse code modulation
PCM600	Protection and control IED manager
PC-MIP	Mezzanine card standard
PMC	PCI Mezzanine card
POR	Permissive overreach
POTT	Permissive overreach transfer trip
Process bus	Bus or LAN used at the process level, that is, in near proximity to the measured and/or controlled components
PSM	Power supply module
PST	Parameter setting tool within PCM600
PT ratio	Potential transformer or voltage transformer ratio
PUTT	Permissive underreach transfer trip
RASC	Synchrocheck relay, COMBIFLEX
RCA	Relay characteristic angle
RFPP	Resistance for phase-to-phase faults
RFPE	Resistance for phase-to-earth faults
RISC	Reduced instruction set computer
RMS value	Root mean square value
RS422	A balanced serial interface for the transmission of digital data in point-to-point connections
RS485	Serial link according to EIA standard RS485
RTC	Real-time clock
RTU	Remote terminal unit
SA	Substation Automation
SBO	Select-before-operate
SC	Switch or push button to close
SCS	Station control system
SCADA	Supervision, control and data acquisition
SCT	System configuration tool according to standard IEC 61850

SDU	Service data unit
SMA connector	Subminiature version A, A threaded connector with constant impedance.
SMT	Signal matrix tool within PCM600
SMS	Station monitoring system
SNTP	Simple network time protocol – is used to synchronize computer clocks on local area networks. This reduces the requirement to have accurate hardware clocks in every embedded system in a network. Each embedded node can instead synchronize with a remote clock, providing the required accuracy.
SRY	Switch for CB ready condition
ST	Switch or push button to trip
Starpoint	Neutral point of transformer or generator
SVC	Static VAr compensation
TC	Trip coil
TCS	Trip circuit supervision
TCP	Transmission control protocol. The most common transport layer protocol used on Ethernet and the Internet.
TCP/IP	Transmission control protocol over Internet Protocol. The de facto standard Ethernet protocols incorporated into 4.2BSD Unix. TCP/IP was developed by DARPA for Internet working and encompasses both network layer and transport layer protocols. While TCP and IP specify two protocols at specific protocol layers, TCP/IP is often used to refer to the entire US Department of Defense protocol suite based upon these, including Telnet, FTP, UDP and RDP.
TNC connector	Threaded Neill-Concelman, a threaded constant impedance version of a BNC connector
TPZ, TPY, TPX, TPS	Current transformer class according to IEC
UMT	User management tool
Underreach	A term used to describe how the relay behaves during a fault condition. For example, a distance relay is underreaching when the impedance presented to it is greater than the apparent impedance to the fault applied to the balance point, that is, the set reach. The relay does not “see” the fault but perhaps it should have seen it. See also Overreach.
UTC	Coordinated Universal Time. A coordinated time scale, maintained by the Bureau International des Poids et Mesures (BIPM), which forms the basis of a coordinated dissemination of standard frequencies and time signals. UTC

	is derived from International Atomic Time (TAI) by the addition of a whole number of "leap seconds" to synchronize it with Universal Time 1 (UT1), thus allowing for the eccentricity of the Earth's orbit, the rotational axis tilt (23.5 degrees), but still showing the Earth's irregular rotation, on which UT1 is based. The Coordinated Universal Time is expressed using a 24-hour clock, and uses the Gregorian calendar. It is used for aeroplane and ship navigation, where it is also sometimes known by the military name, "Zulu time." "Zulu" in the phonetic alphabet stands for "Z", which stands for longitude zero.
UV	Undervoltage
WEI	Weak end infeed logic
VT	Voltage transformer
X.21	A digital signalling interface primarily used for telecom equipment
$3I_O$	Three times zero-sequence current. Often referred to as the residual or the earth-fault current
$3U_O$	Three times the zero sequence voltage. Often referred to as the residual voltage or the neutral point voltage

Contact us

ABB AB
Substation Automation Products
SE-721 59 Västerås, Sweden
Phone +46 (0) 21 32 50 00
Fax +46 (0) 21 14 69 18

www.abb.com/substationautomation

1MRK 505 276-UEN - © Copyright 2012 ABB. All rights reserved.

Power and productivity
for a better world™