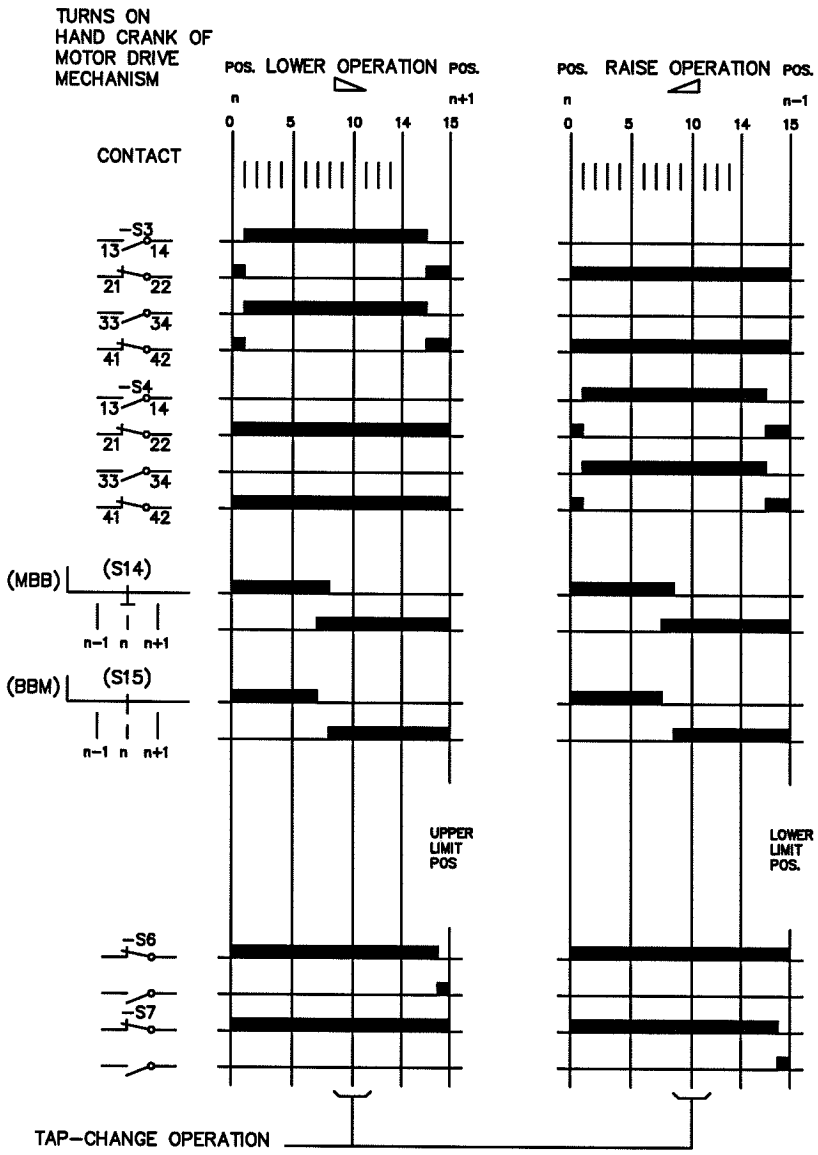

K1	Contactor, step−by−step operation
K2	Contactor, lower
K3	Contactor, raise
K4	Bistable relay
K7	Undervoltage relay, control circuit
K601	Time relay, running−through protection
K602	Time relay, tap−change incomplete
M1	Motor
Q1	Protective motor switch
S1	Control selector switch
S2	Control switch
S3/S4	Cam operated contacts raise/lower 33−34 Maintaining contact 41−42 Interlocking contact 13−14, 21−22 Auxiliary contact
S5	Interlocking switch, open when hand crank is fitted
S6/S7	Limit switch, upper/lower limit position
S8	Push button "EMERGENCY STOP"
S15	Continuation contact
X	Terminal board group

FOR HEATER, LIGHT CIRCUIT AND TAP−POSITION TRANSMITTER No. S14 ETC,

SEE SEPARATE DIAGRAMS.

◺	Raise operation	□ ●	Remote control
◹	Lower operation	◉	Local control
U	Upper limit pos.	⏚	Protective earth
L	Lower limit pos.	o—	Crank

We reserve all rights in this document and in the information contained therein. Reproduction, use or disclosure to third parties without express authority is strictly forbidden. © Copyright 2003

Based on	Prepared 2003−11−26 THLA Approved 2003−11−26 TOLA	Circuit Diagram Motor−Drive Mechanism TYPE BUL	
		ABB	Resp dept COM/FOK 5483 538−68
			Rev ind Lang Sheet 1 Cont 2

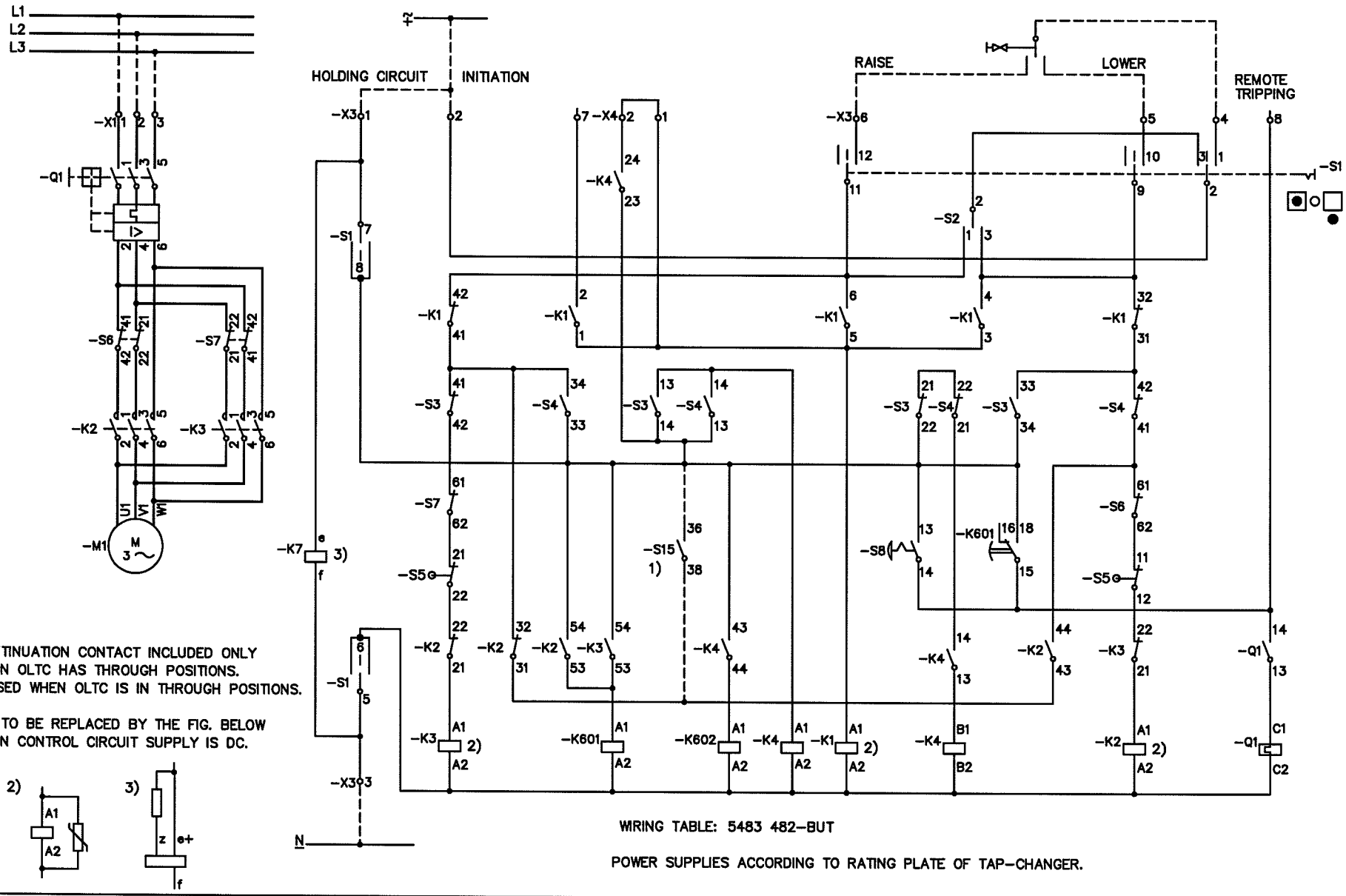

WIRING TABLE: 5483 482-BUT

POWER SUPPLIES ACCORDING TO RATING PLATE OF TAP-CHANGER.

Based on	Prepared 2003-11-26 THLA Approved 2003-11-26 TOLA	Circuit Diagram Motor-Drive Mechanism TYPE BUL	=MD Resp dept COM/FOK Rev Ind Lang Sheet 2 Cont 3
		ABB	5483 538-68

We reserve all rights in this document and in the information contained therein. Reproduction, use or disclosure to third parties without express authority is strictly forbidden. Copyright © ABB Components AB

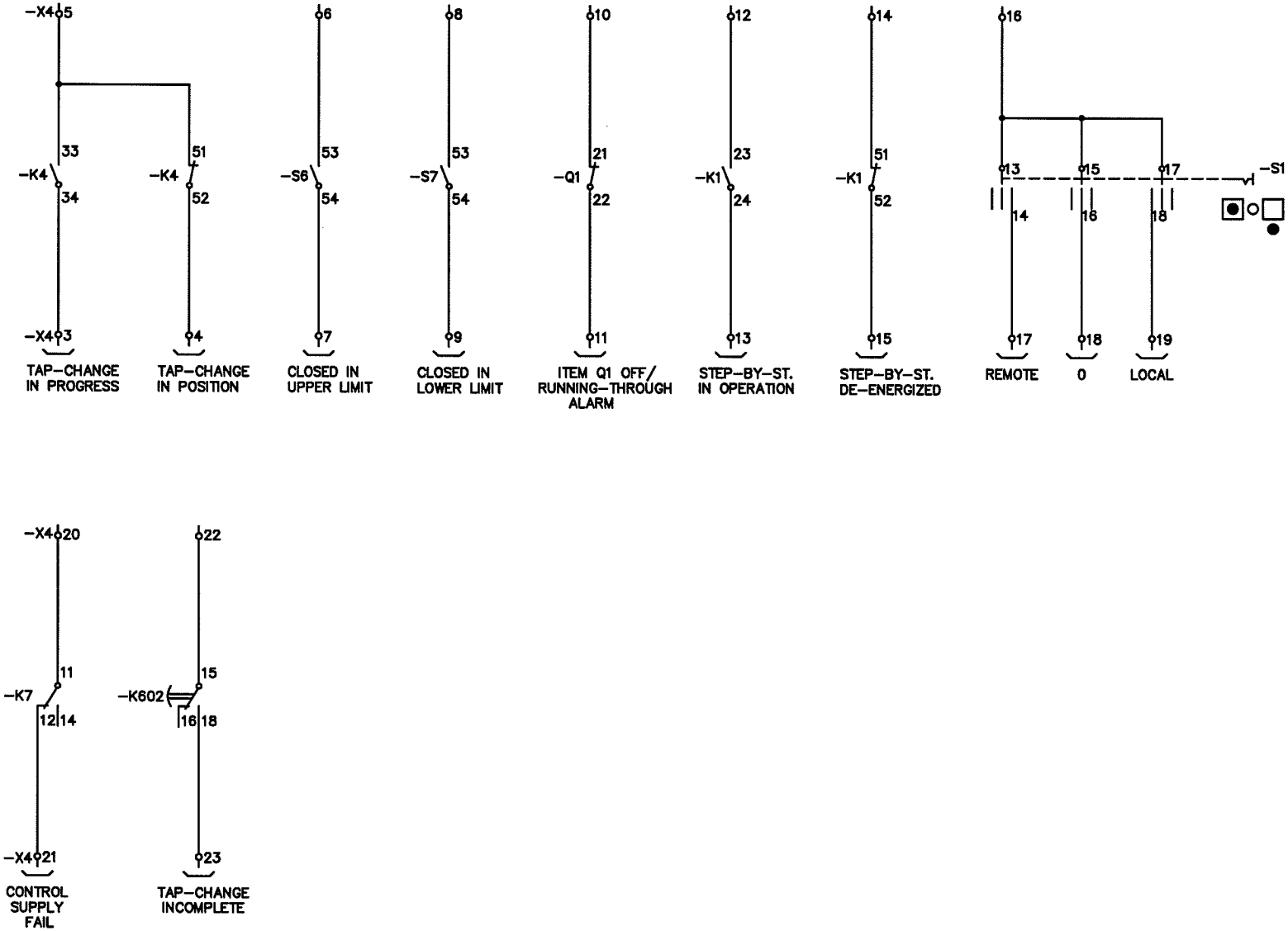

We reserve all rights in this document and in the information contained therein. Reproduction, use or disclosure to third parties without express authority is strictly forbidden. © ABB Components AB

Based on	Prepared 2003-11-26 THLA Approved 2003-11-26 TOLA	Circuit Diagram Motor-Drive Mechanism TYPE BUL	=MD Resp dept COM/FOK	Rev Ind
		ABB	5483 538-68	Lang Sheet 3 Cont —