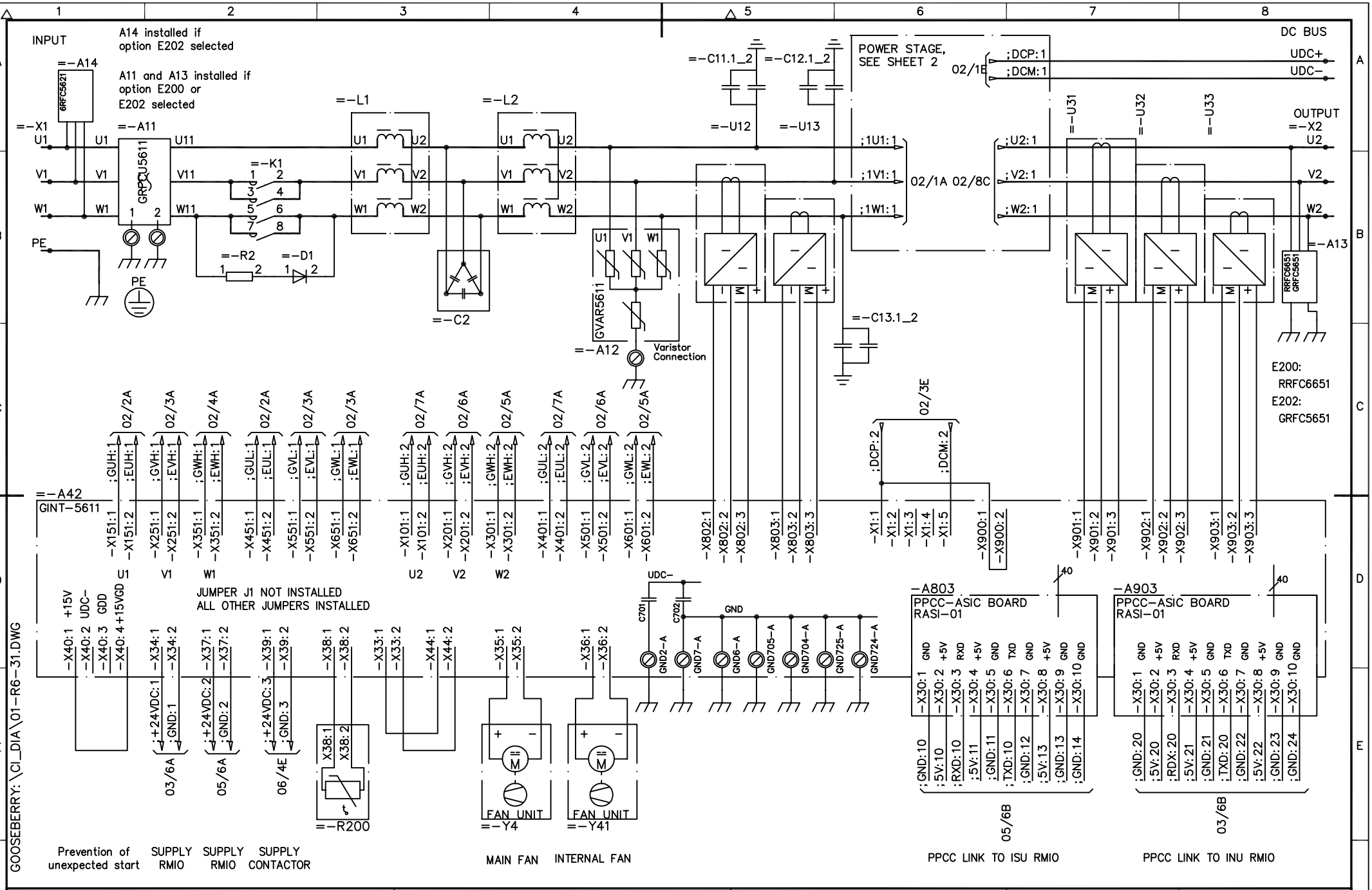


| | | | |
|---|---|---|---|
| Cust. Doc. No. | Prepared 30.09.2005 Ahola Terho | Title ACS800-31 Main Circuit R6 220V, 415V, 500V | Circuit Diagram EFS2 / Item des. =R6_31 |
| Customer | Approved 04.10.2005 Vesa Tiihonen | | Resp.dept. / Rev.ind. A / Lang. |
| | Project GOOSEBERRY | ABB Drives | Doc. No. 3AFE 68621739 / Sheet 01 / Cont. 02 |
| ABB Ref. No. | | | |

We reserve all rights in this document and in the information contained therein. Reproduction, use or disclosure to third parties without express authority is strictly forbidden. Copr. ABB Automation

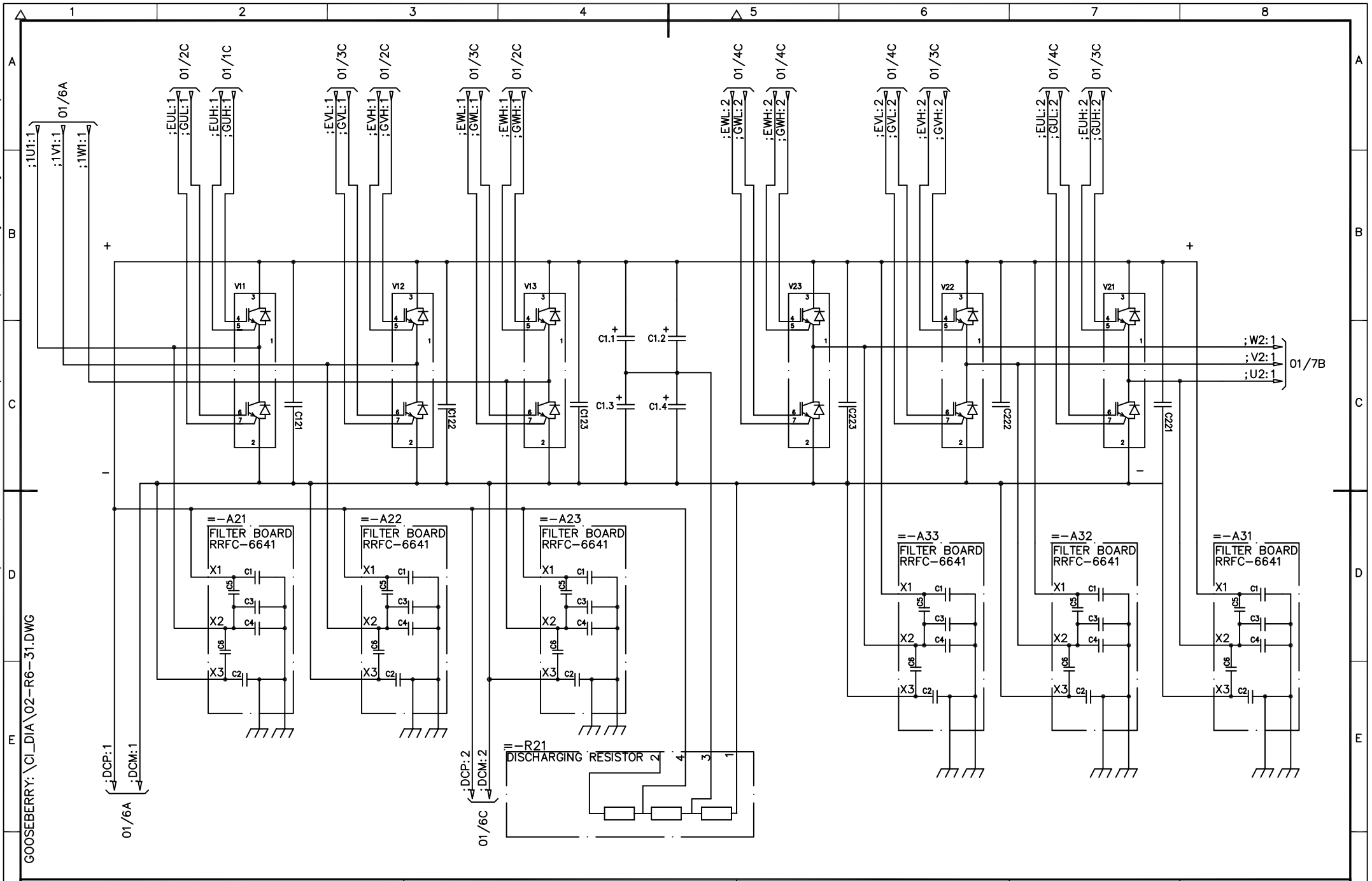


| | | | |
|---|---|---|---|
| Cust. Doc. No. | Prepared 30.09.2005 Ahola Terho | Title ACS800-31 Main circuit R6 220V, 415V, 500V | Circuit Diagram EFS2 / Item des. =R6_31 |
| Customer | Approved 04.10.2005 Vesa Tiihonen | | Resp.dept. / Rev.ind. A / Lang. |
| | Project GOOSEBERRY | ABB Drives | Doc. No. 3AFE 68621739 / Sheet 02 / Cont. 03 |
| ABB Ref. No. | | | |

We reserve all rights in this document and in the information contained therein. Reproduction, use or disclosure to third parties without express authority is strictly forbidden. Copr. ABB Automation

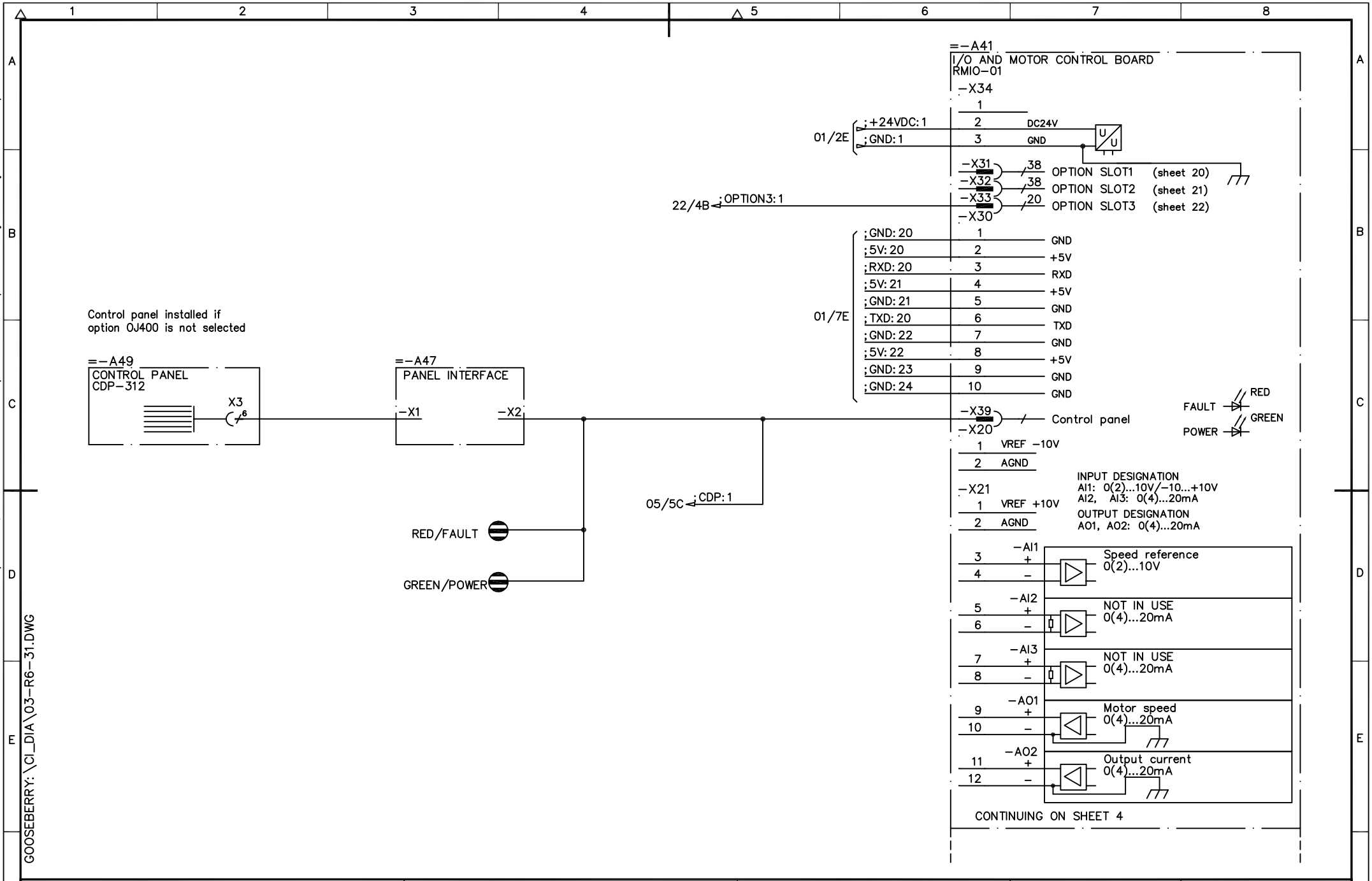


GOOSEBERRY:\CI_DIA\03-R6-31.DWG

| | | | | | |
|---|---|---|---|---|---|
| Cust. Doc. No. | Prepared 30.09.2005 | Ahola Terho | Title ACS800-31 | Circuit Diagram EFS2 | Item des. =R6_31 |
| Customer | Approved 04.10.2005 | Vesa Tiihonen | Main Circuit | Resp.dept. | Rev.ind. A / Lang. |
| | Project GOOSEBERRY | | I/O and motor control board | Doc. No. 3AFE 68621739 | Sheet 03 / Cont. 04 |
| ABB Ref. No. | | | ABB Drives | | |

We reserve all rights in this document and in the information contained therein. Reproduction, use or disclosure to third parties without express authority is strictly forbidden. Copr. ABB Automation

We reserve all rights in this document and in the information contained therein. Reproduction, use or disclosure to third parties without express authority is strictly forbidden. Copr. ABB Automation

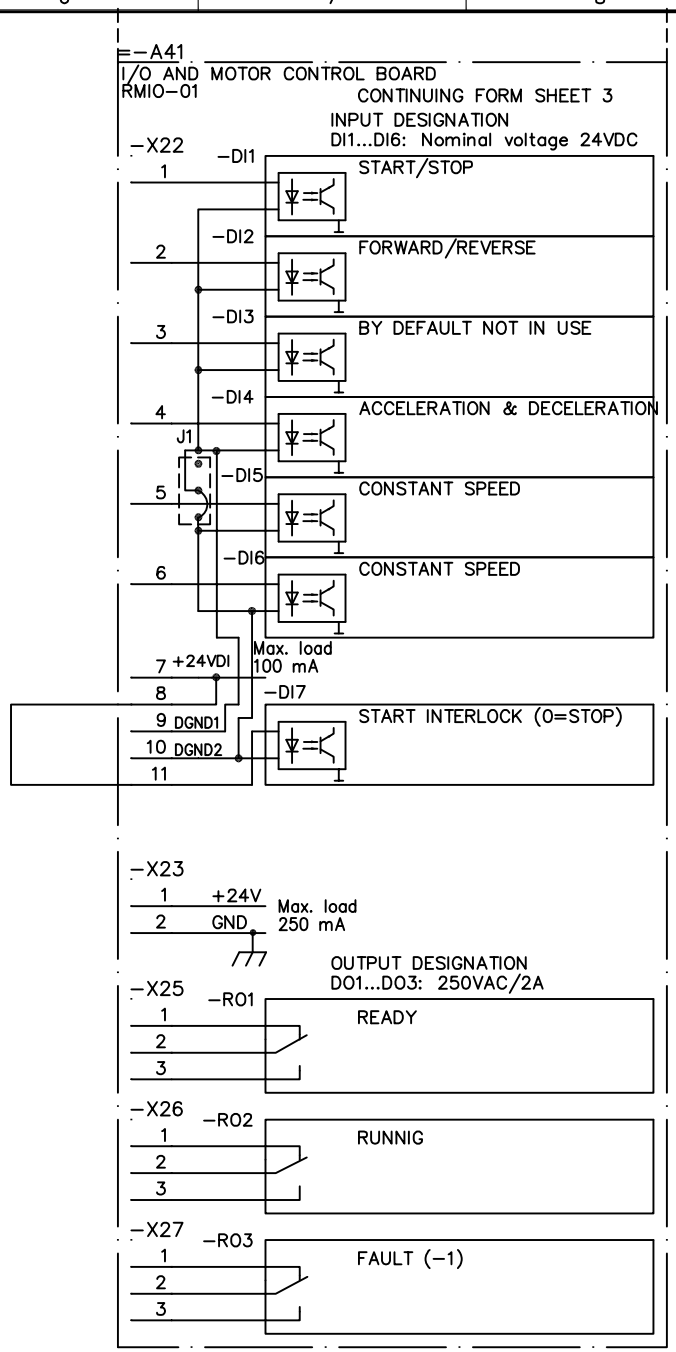


GOOSEBERRY:\CI_DIA\04-R6-31.DWG

| | | | |
|---|---|---|---|
| Cust. Doc. No. | Prepared 30.09.2005 Ahola Terho | Title ACS800-31 Main circuit I/O and motor control board | Circuit Diagram EFS2 / Item des. =R6_31 |
| Customer | Approved 04.10.2005 Vesa Tiihonen | | Resp.dept. / Rev.ind. A / Lang. |
| | Project GOOSEBERRY | ABB Drives | Doc. No. 3AFE 68621739 / Sheet 04 / Cont. 05 |
| ABB Ref. No. | | | |

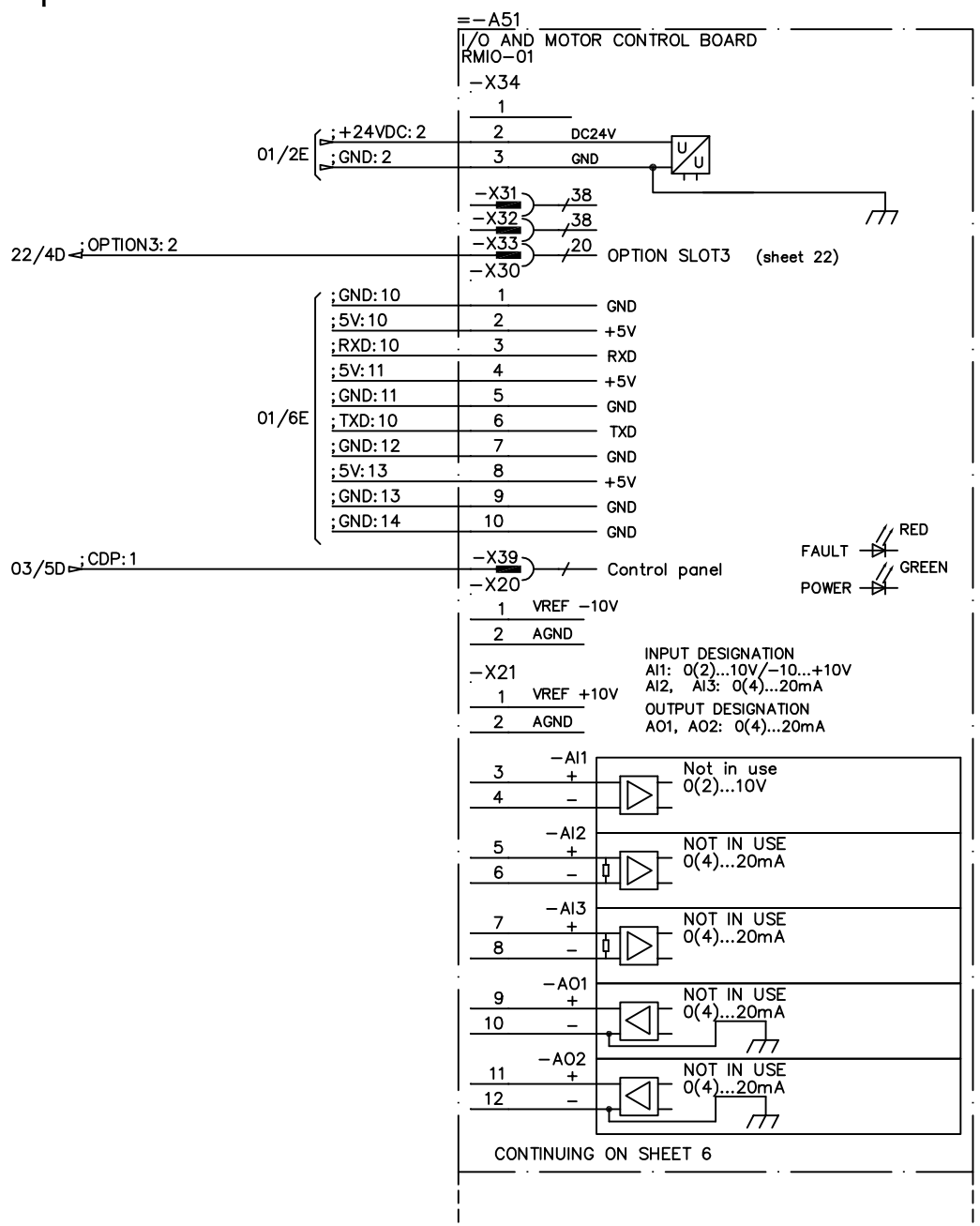


GOOSEBERRY:\CI_DIA\05-R6-31.DWG

| | | | |
|---|---|---|---|
| Cust. Doc. No. | Prepared 30.09.2005 Ahola Terho | Title ACS800-31 Main circuit ISU control boerd | Circuit Diagram EFS2 / Item des. =R6_31 |
| Customer | Approved 04.10.2005 Vesa Tiihonen | | Resp.dept. / Rev.ind. A / Lang. |
| | Project GOOSEBERRY | ABB Drives | Doc. No. 3AFE 68621739 / Sheet 05 / Cont. 06 |
| ABB Ref. No. | | | |

We reserve all rights in this document and in the information contained therein. Reproduction, use or disclosure to third parties without express authority is strictly forbidden. Copr. ABB Automation

We reserve all rights in this document and in the information contained therein. Reproduction, use or disclosure to third parties without express authority is strictly forbidden. Copr. ABB Automation

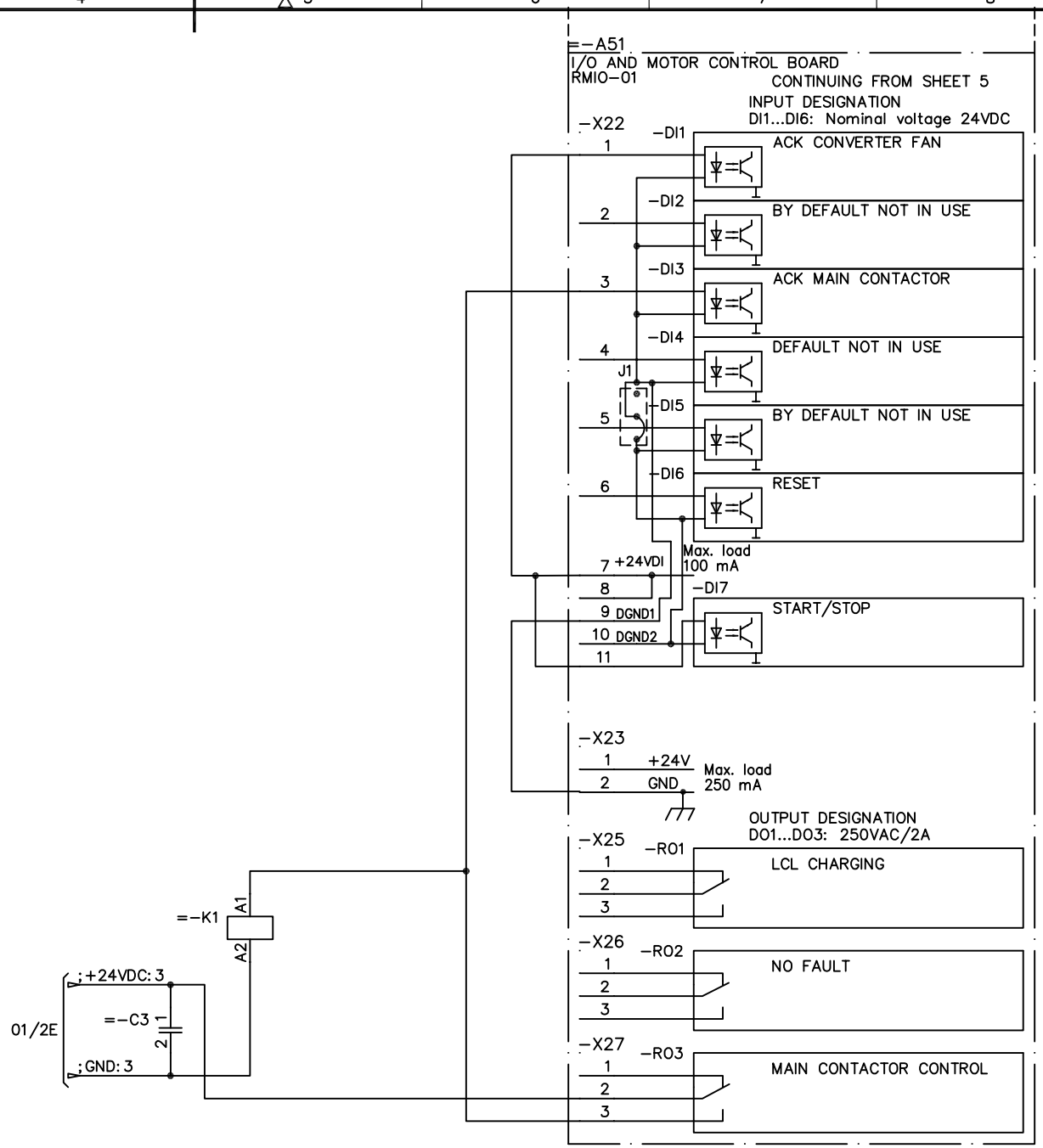


GOOSEBERRY:\CI_DIA\06-R6-31.DWG

| | | | |
|---|---|---|---|
| Cust. Doc. No. | Prepared 30.09.2005 Ahola Terho | Title ACS800-31 Main Circuit ISU control board | Circuit Diagram EFS2 / Item des. =R6_31 |
| Customer | Approved 04.10.2005 Vesa Tiihonen | | Resp.dept. / Rev.ind. A / Lang. |
| | Project GOOSEBERRY | ABB Drives | Doc. No. 3AFE 68621739 / Sheet 06 / Cont. 22 |
| ABB Ref. No. | | | |

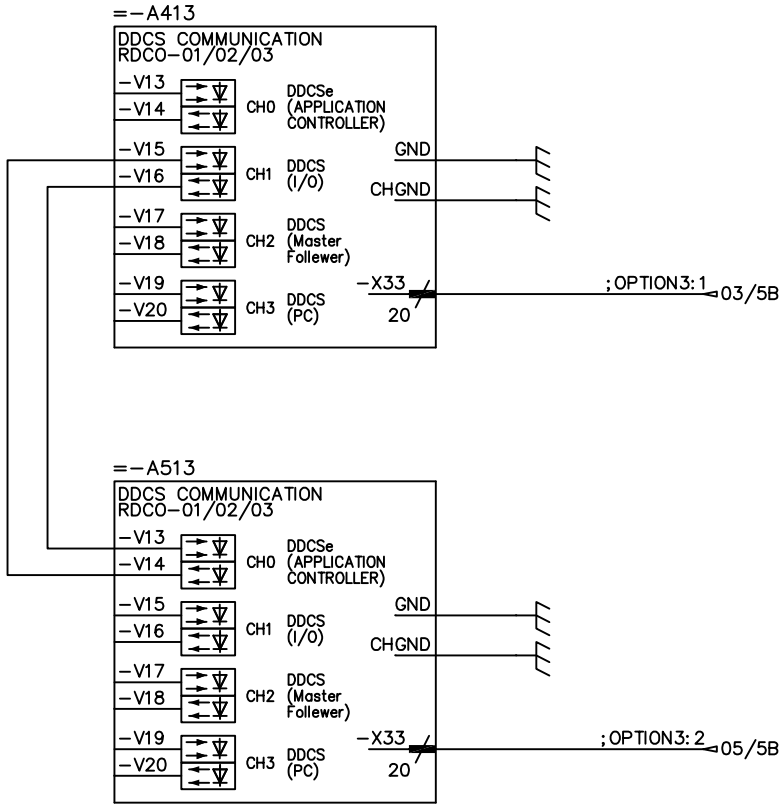


GOOSEBERRY:\CI_DIA\22-R6-31.DWG

| | | | | | |
|---|---|---|---|---|---|
| Cust. Doc. No. | Prepared 30.09.2005 Ahola Terho | Title ACS800-31 | Circuit Diagram | Item des. =R6_31 | |
| Customer | Approved 04.10.2005 Vesa Tiihonen | Main Circuit | EFS2 | | |
| | Project GOOSEBERRY | DDCS communication | Resp.dept. | Rev.ind. A | Lang. |
| ABB Ref. No. | | ABB Drives | Doc. No. 3AFE 68621739 | Sheet 22 | Cont. – |

We reserve all rights in this document and in the information contained therein. Reproduction, use or disclosure to third parties without express authority is strictly forbidden. Copr. ABB Automation