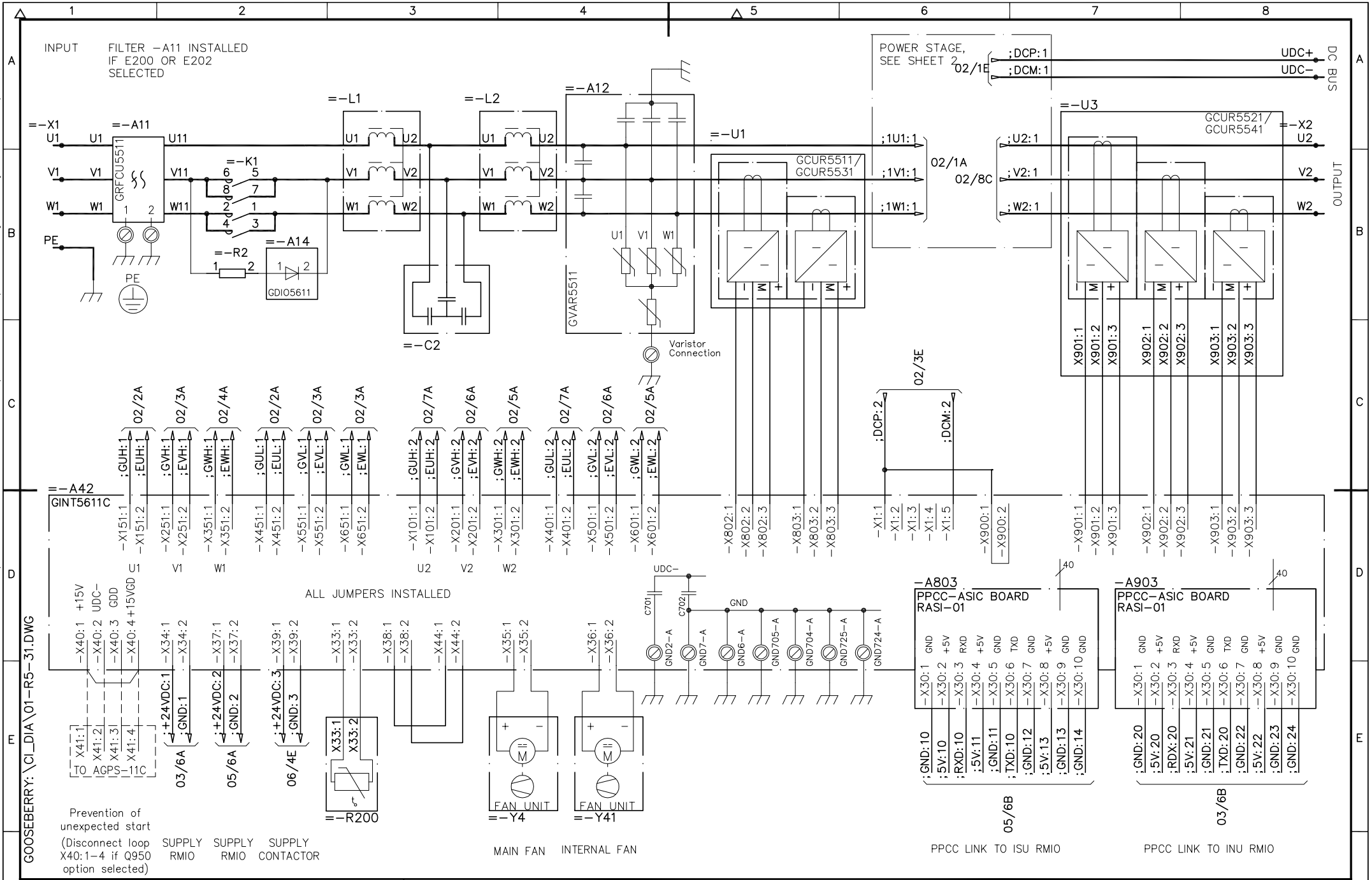

Cust. Doc. No.	Prepared 03.10.2005 Ahola Terho	Title ACS800–31 Main Circuit R5 220V, 415V, 500V	Circuit Diagram EFS2 / Item des. =R5_31
Customer	Approved 14.07.2006 Vesa Tiihonen		Resp.dept. / Rev.ind. B / Lang.
	Project GOOSEBERRY	ABB Drives	Doc. No. 3AFE 68621747 / Sheet 01 / Cont. 02
ABB Ref. No.			

We reserve all rights in this document and in the information contained therein. Reproduction, use or disclosure to third parties without express authority is strictly forbidden. Copr. ABB Automation

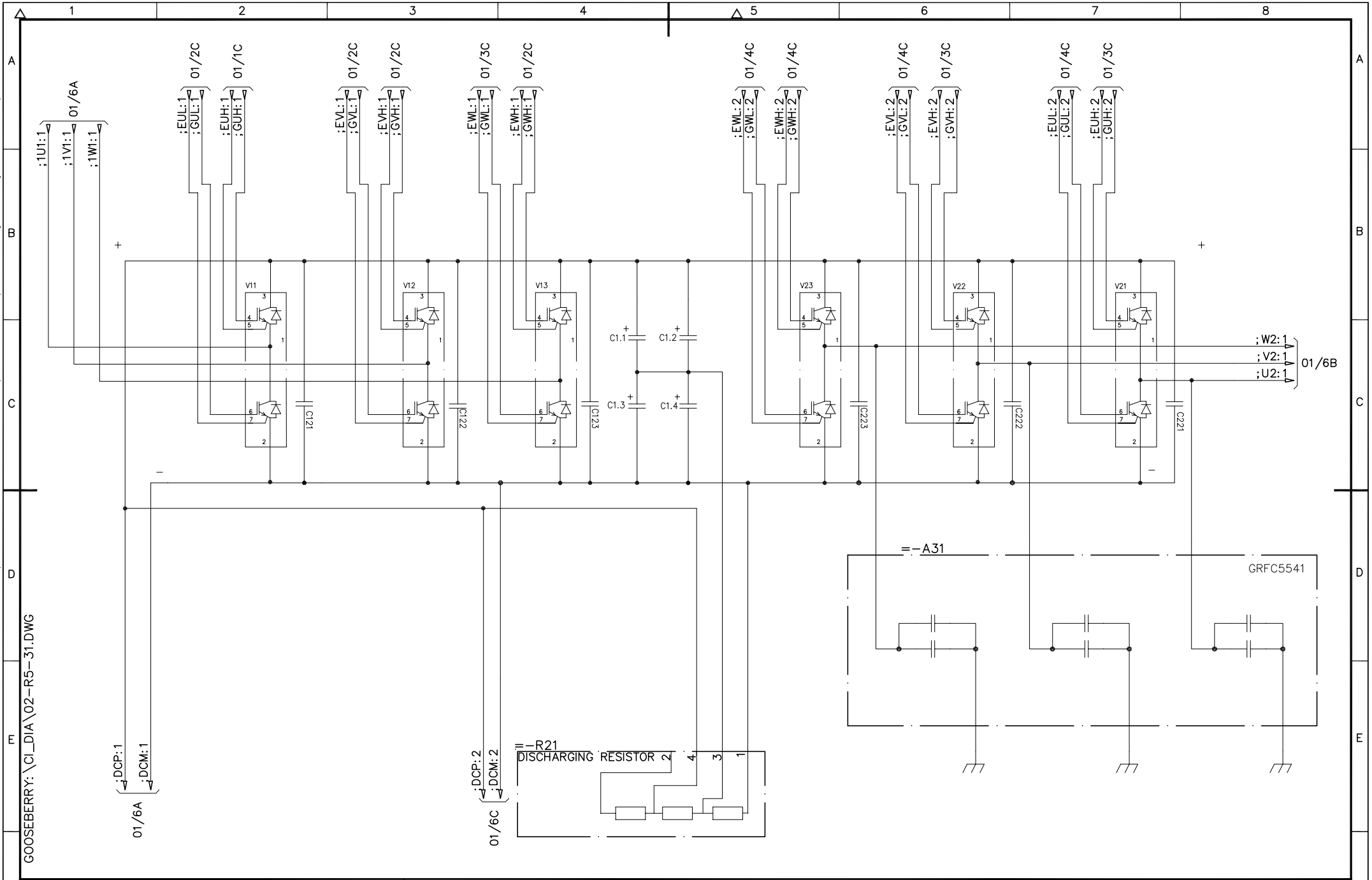

Cust. Doc. No.	Prepared 03.10.2005 Ahola Terho	Title ACS800-31 Main Circuit R5 220V, 415V, 500V	Circuit Diagram EFS2	Item des. =R5_31
Customer	Approved 14.07.2006 Vesa Tiihonen		Resp.dept.	Rev.ind. B Lang.
	Project GOOSEBERRY	ABB Drives	Doc. No. 3AFE 68621747	Sheet 02 Cont. 03
ABB Ref. No.				

We reserve all rights in this document and in the information contained therein. Reproduction, use or disclosure to third parties without express authority is strictly forbidden. Copr. ABB Automation

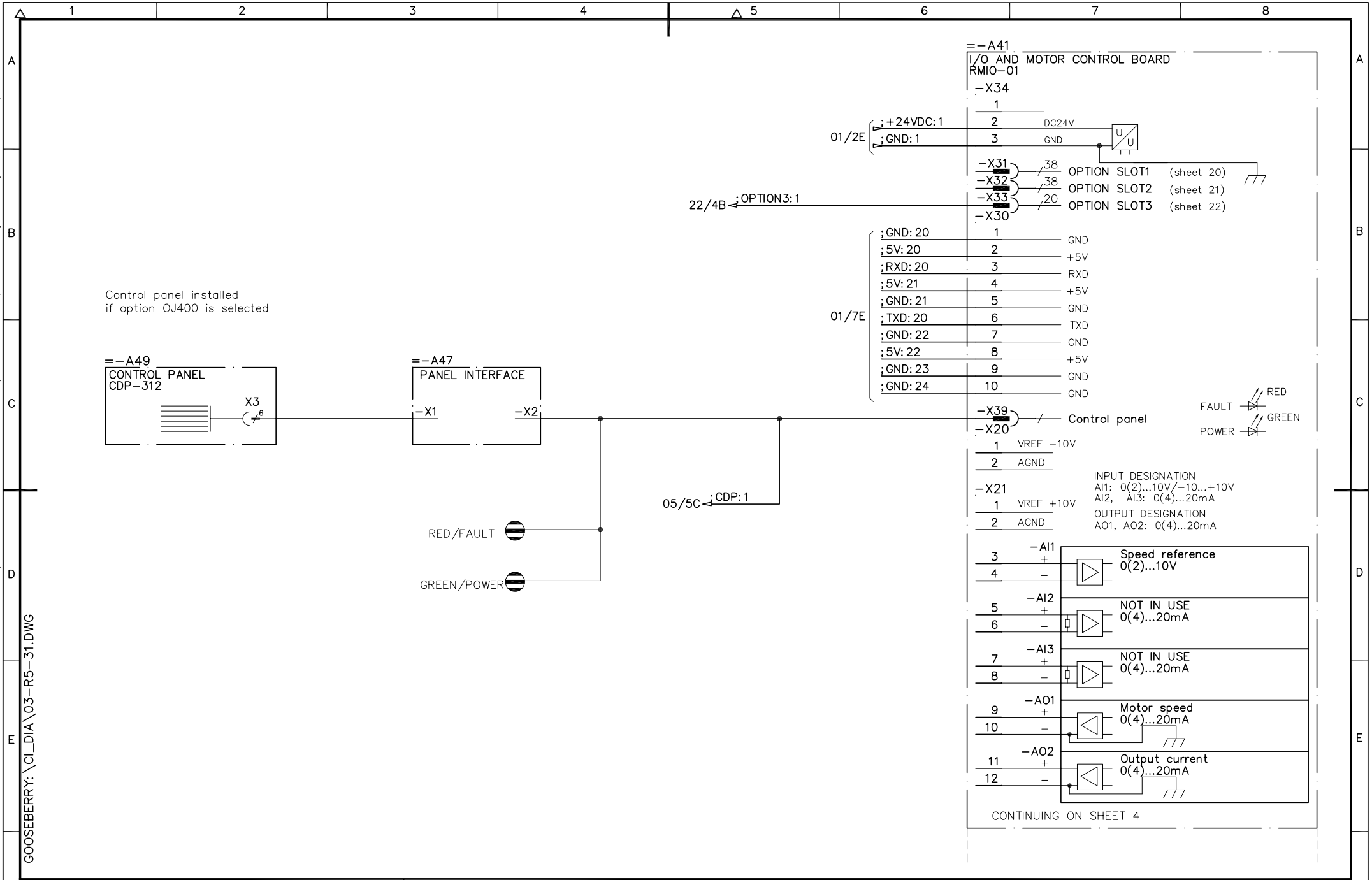

Cust. Doc. No.	Prepared 03.10.2005 Ahola Terho	Title ACS800-31 Main Circuit I/O and motor control board	Circuit Diagram EFS2 / Item des. =R5_31
Customer	Approved 14.07.2006 Vesa Tiihonen		Resp.dept. / Rev.ind. B / Lang.
	Project GOOSEBERRY	ABB Drives	Doc. No. 3AFE 68621747 / Sheet 03 / Cont. 04
ABB Ref. No.			

GOOSEBERRY:\CI_DIA\03-R5-31.DWG

We reserve all rights in this document and in the information contained therein. Reproduction, use or disclosure to third parties without express authority is strictly forbidden. Copr. ABB Automation

We reserve all rights in this document and in the information contained therein. Reproduction, use or disclosure to third parties without express authority is strictly forbidden. Copr. ABB Automation

GOOSEBERRY:\CI_DIA\04-R5-31.DWG

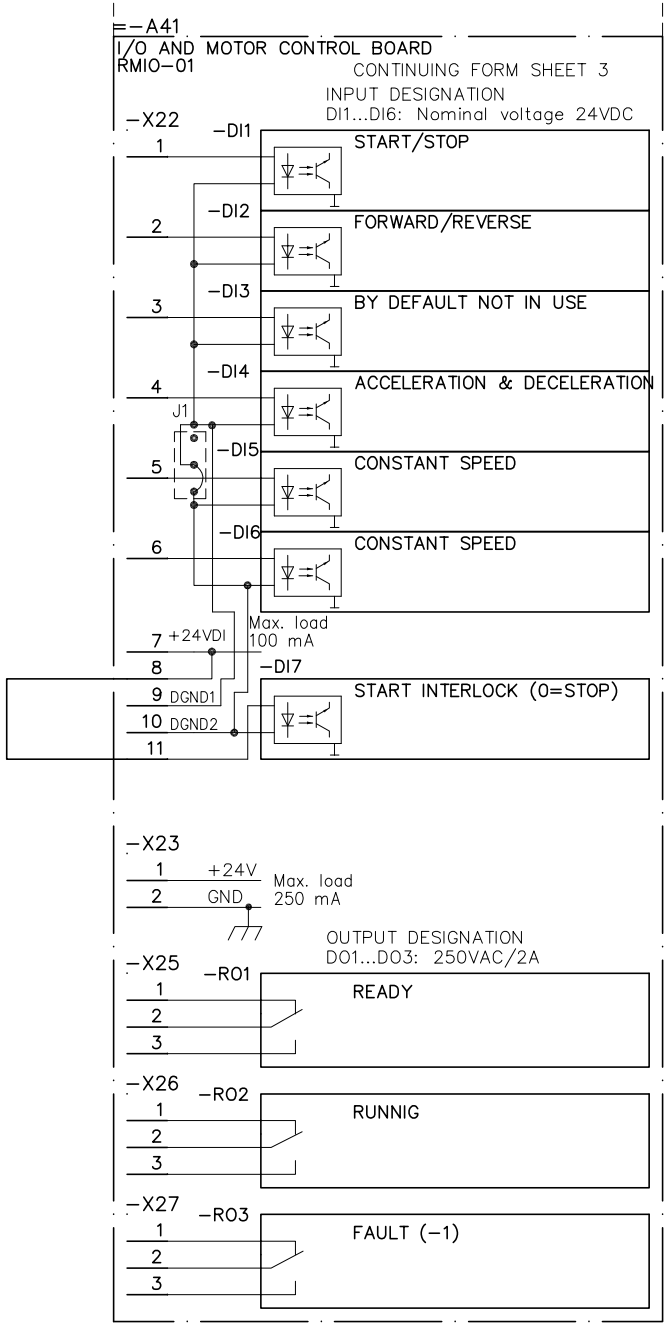

Cust. Doc. No.	Prepared 03.10.2005 Ahola Terho	Title ACS800-31 Main Circuit I/O and motor control board	Circuit Diagram EFS2 / Item des. =R5_31
Customer	Approved 14.07.2006 Vesa Tiihonen		Resp.dept. / Rev.ind. B / Lang.
	Project GOOSEBERRY	ABB Drives	Doc. No. 3AFE 68621747 / Sheet 04 / Cont. 05
ABB Ref. No.			

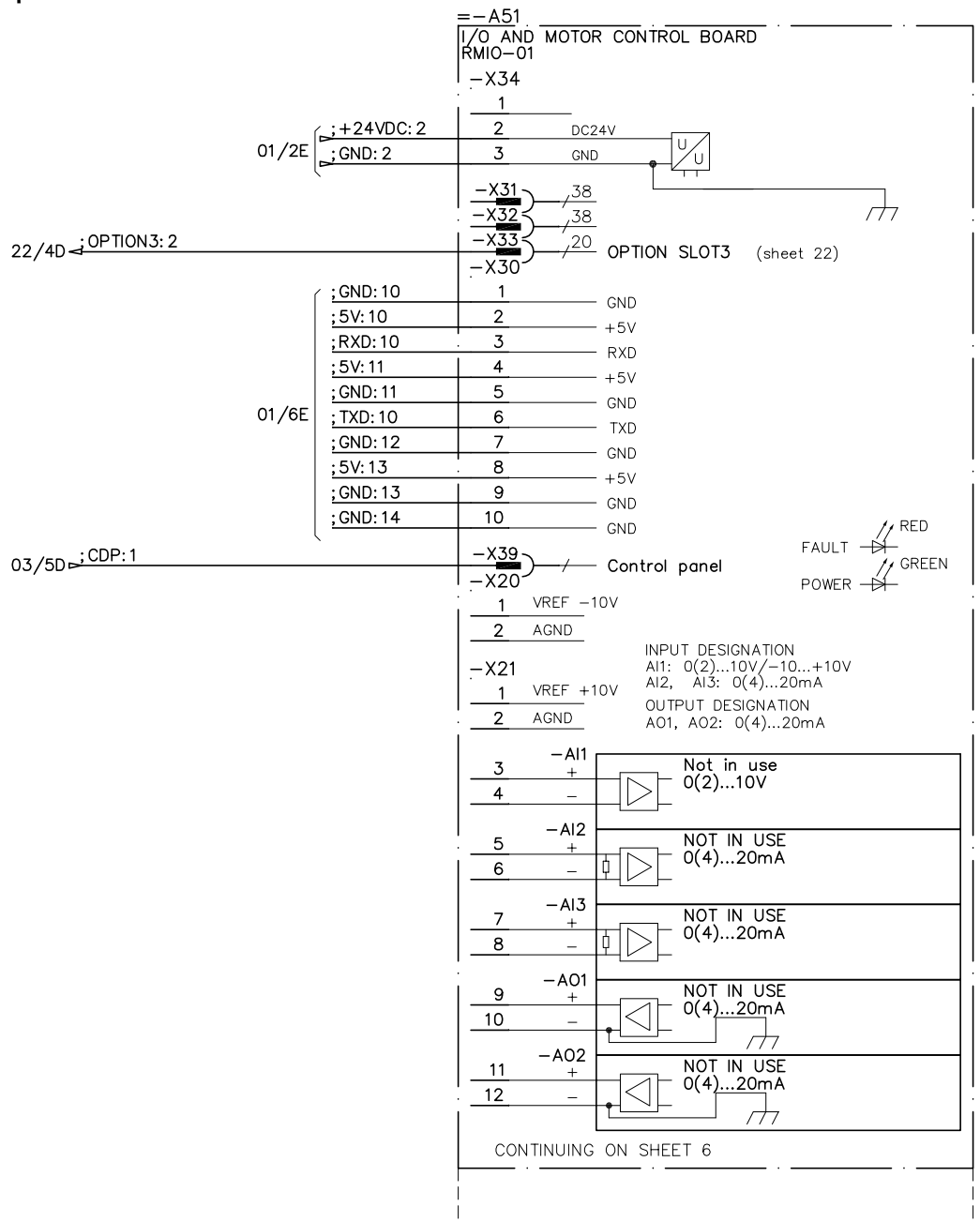

GOOSEBERRY:\CI_DIA\05-R5-31.DWG

Cust. Doc. No.	Prepared 03.10.2005 Ahola Terho	Title ACS800-31 Main Circuit ISU control board	Circuit Diagram EFS2 / Item des. =R5_31
Customer	Approved 14.07.2006 Vesa Tiihonen		Resp.dept. / Rev.ind. B / Lang.
	Project GOOSEBERRY	ABB Drives	Doc. No. 3AFE 68621747 / Sheet 05 / Cont. 06
ABB Ref. No.			

We reserve all rights in this document and in the information contained therein. Reproduction, use or disclosure to third parties without express authority is strictly forbidden. Copr. ABB Automation

We reserve all rights in this document and in the information contained therein. Reproduction, use or disclosure to third parties without express authority is strictly forbidden. Copr. ABB Automation

GOOSEBERRY:\CI_DIA\06-R5-31.DWG

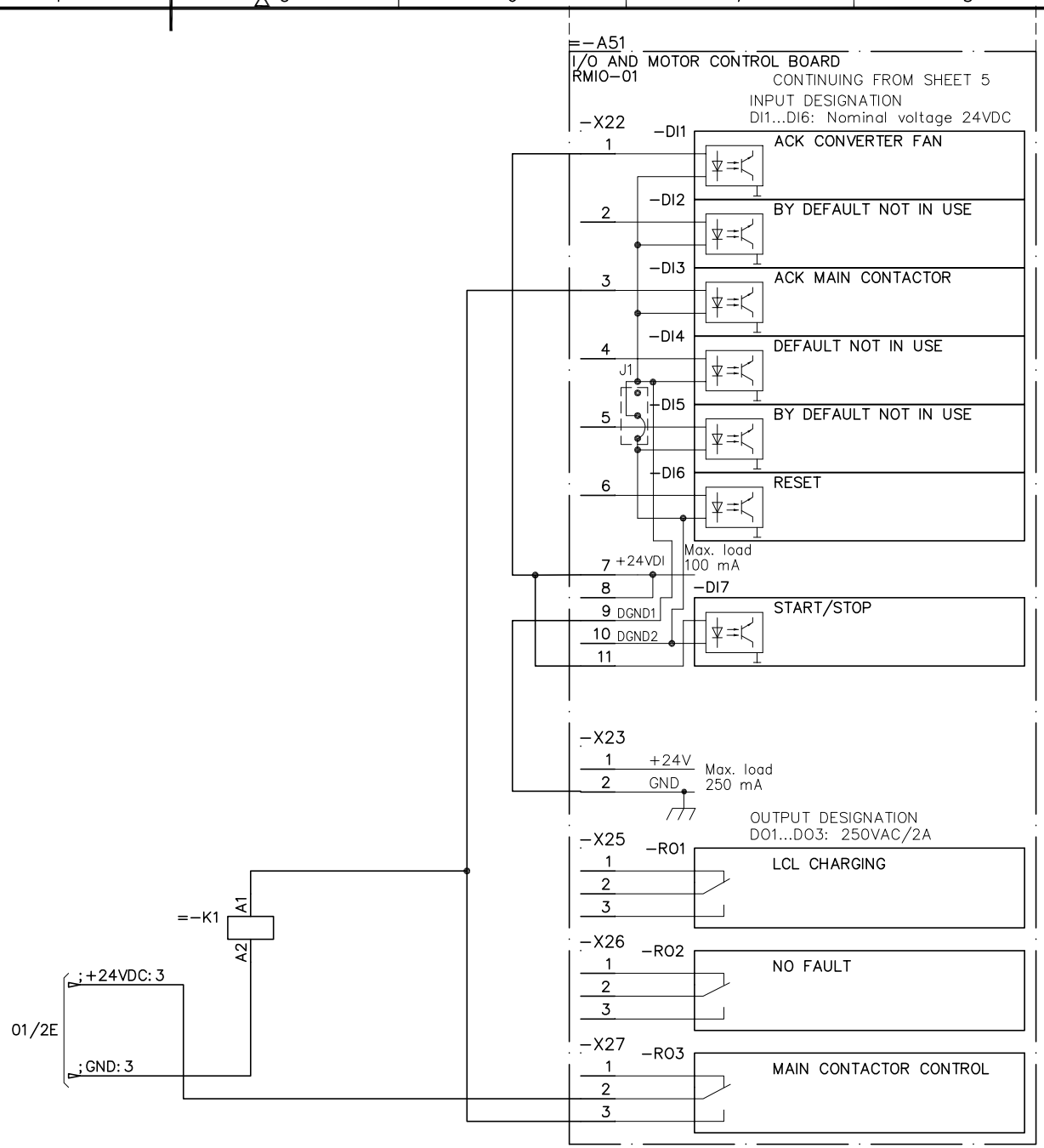

Cust. Doc. No.	Prepared 03.10.2005 Ahola Terho	Title ACS800-31 Main Circuit ISU control board	Circuit Diagram EFS2 / Item des. =R5_31
Customer	Approved 14.07.2006 Vesa Tiihonen		Resp.dept. / Rev.ind. B / Lang.
	Project GOOSEBERRY	ABB Drives	Doc. No. 3AFE 68621747 / Sheet 06 / Cont. 22
ABB Ref. No.			

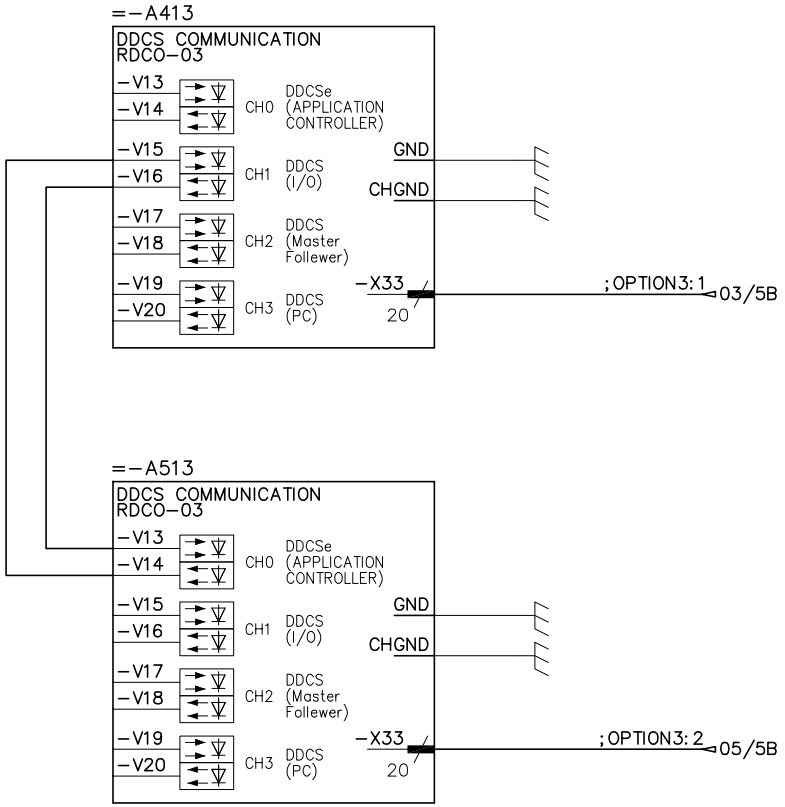

GOOSEBERRY:\CI_DIA\22-R5-31.DWG

Cust. Doc. No.	Prepared 03.10.2005 Ahola Terho	Title ACS800-31	Circuit Diagram	Item des. =R5_31
Customer	Approved 14.07.2006 Vesa Tiihonen	Main Circuit	EFS2	
	Project GOOSEBERRY	DDCS communication	Resp.dept.	Rev.ind. B / Lang.
ABB Ref. No.		ABB Drives	Doc. No. 3AFE 68621747	Sheet 22 / Cont. –

We reserve all rights in this document and in the information contained therein. Reproduction, use or disclosure to third parties without express authority is strictly forbidden. Copr. ABB Automation