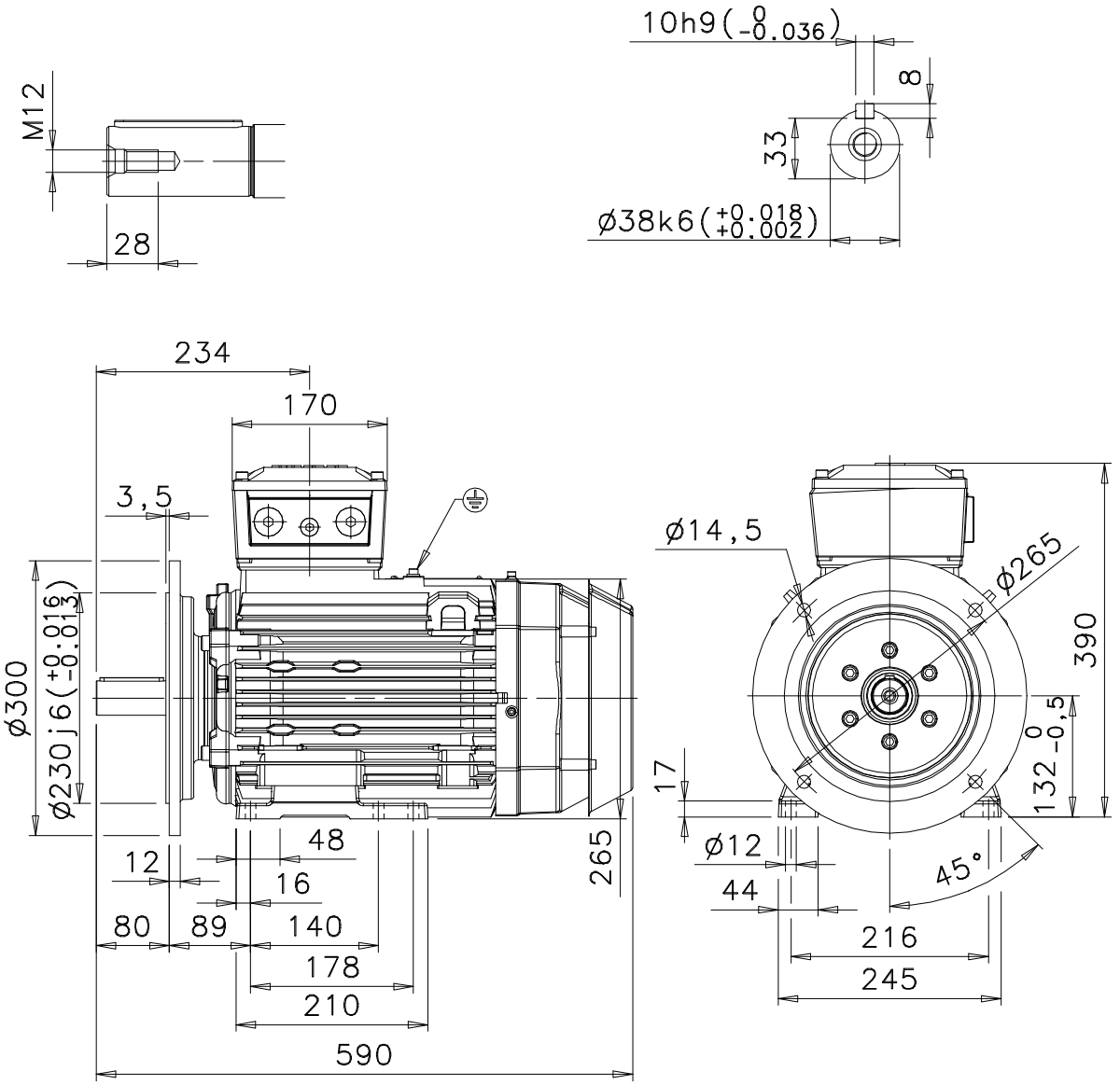

Additional information:

Dimension Print	Motor Type: M3JP 132SM_2-8, V15, FF265	Document No: 3GZF500213-85 A 13 JP 132 A
Description: STANDARD SQUIRREL CAGE MOTOR		

Unit: ABB Oy, Motors and Generators		Issued by: R.Ketonen	Replaces:
Date: 09.02.2011		Approved by: P.Viitanen	Replaced by:
ABB Oy	Customer Reference:		ABB