Installation and commissioning manual

REL 551-C1*2.3

Line differential protection terminal

About this manual

DocID: 1MRK 506 106-UEN
Issue date: June 2001
Status: New
Version: 2.3
Revision: 00

Manufacturer:

ABB Automation Products AB
Substation Automation Division
SE-721 59 Västerås
Sweden
Tel: +46 (0) 21 34 20 00
Fax: +46 (0) 21 14 69 18
Internet: http://www.abb.se

Contents

Contents

Contents

Contents

Chapter 1 Introduction

About this chapter

This chapter introduces the user to the manual as such.

1 Introduction to the installation and commissioning manual

1.1 About the complete set of manuals to a terminal

The complete package of manuals to a terminal is named users manual (UM). The *Users manual* consists of four different manuals:

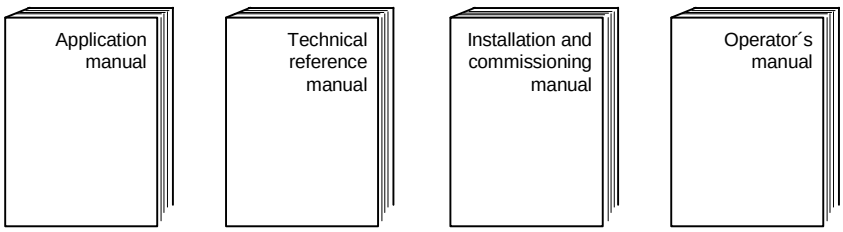

en01000044.vsd

The Application Manual (AM) contains descriptions, such as application and functionality descriptions as well as setting calculation examples sorted per function. The application manual should be used when designing and engineering the protection terminal to find out where and for what a typical protection function could be used. The manual should also be used when calculating settings and creating configurations.

The Technical Reference Manual (TRM) contains technical descriptions, such as function blocks, logic diagrams, input and output signals, setting parameter tables and technical data sorted per function. The technical reference manual should be used as a technical reference during the engineering phase, installation and commissioning phase and during the normal service phase.

The Operator´s Manual (OM) contains instructions on how to operate the protection terminal during normal service (after commissioning and before periodic maintenance tests). The operator´s manual could be used to find out how to handle disturbances or how to view calculated and measured network data in order to determine the reason of a fault.

The Installation and Commissioning Manual (ICM) contains instructions on how to install and commission the protection terminal. The manual can also be used as a reference if a periodic test is performed. The manual covers procedures for mechanical and electrical installation, energising and checking of external circuitry, setting and configuration as well as verifying settings and performing a directionality test. The chapters and sections are organised in the chronological order (indicated by chapter/section numbers) the protection terminal should be installed and commissioned.

1.2 About the installation and commissioning manual

The installation and commissioning manual contains the following chapters:

- The chapter *"Safety information"* presents warning and note signs, which the user should draw attention to.
- The chapter *"Overview"* gives an overview over the major task when installing and commissioning the terminal.
- The chapter *"Unpacking and checking the terminal"* contains instructions on how to receive the terminal.
- The chapter *"Installing the terminal"* contains instructions on how to install the terminal.
- The chapter *"Checking the external circuitry"* contains instructions on how to check that the terminal is properly connected to the protection system.
- The chapter *"Energising the terminal"* contains instructions on how to start-up the terminal.
- The chapter *"Configuring the digital communication modules"* contains instructions on how to configure the communication modules such as modems, optical converters etc if included in the terminal.
- The chapter *"Setting and configuring the terminal"* contains instructions on how to download settings and configuration to the terminal.
- The chapter *"Establishing connection and verifying the SPA/IEC-communication"* contains instructions on how to enter SPA/IEC settings and verifying the SPA/IEC communication.
- The chapter *"Verifying settings by secondary injection"* contains instructions on how to verify that each included function operates correctly according to the set value.
- The chapter *"Verifying the internal configuration"* contains instructions on how verify that the terminal is properly configured.
- The chapter *"Testing the protection system"* contains instructions on how to test that the terminal is in contact with the primary system.
- The chapter *"Checking the directionality"* contains instructions on how to test directional dependent functions, if included in the terminal.

1.3 Intended audience

1.3.1 General

The installation and commissioning manual is addressing the installation, commissioning and maintenance personnel responsible for taking the protection into normal service and out of service.

1.3.2 Requirements

The installation personnel must have a basic knowledge in handling electronic equipment. The commissioning and maintenance personnel must be well experienced in using protection equipment, test equipment, protection functions and the configured functional logics in the protection.

1.4 Related documents

Documents related to REL 551-C1*2.3	Identity number
Operator's manual	1MRK 506 104-UEN
Installation and commissioning manual	1MRK 506 106-UEN
Technical reference manual	1MRK 506 105-UEN
Application manual	1MRK 506 118-UEN
Technical overview brochure	1MRK 506 103-BEN

1.5 Revision notes

Revision	Description
2.3-00	First revision

Chapter 2 Safety information

About this chapter

This chapter contains safety information. Warning signs are presented which attend the user to be careful during certain operations in order to avoid human injuries or damage to equipment

1 Warning signs

Warning!

Strictly follow the company and country safety regulations. Working in a high voltage environment requires serious approach to avoid human injuries and damage to equipment.

Warning!

Do not touch circuitry during operation. Potentially lethal voltages and currents are present.

Warning!

Always avoid to touch the circuitry when the cover is removed. The product contains electronic circuitries which can be damaged if exposed to static electricity (ESD). The electronic circuitries also contain high voltage which is lethal to humans.

Warning!

Always use suitable isolated test pins when measuring signals in open circuitry. Potentially lethal voltages and currents are present.

Warning!

Never connect or disconnect a wire and/or a connector to or from a terminal during normal operation. Hazardous voltages and currents are present that may be lethal. Operation may be disrupted and terminal and measuring circuitry may be damaged.

Warning!

Always connect the terminal to protective ground, regardless of the operating conditions. This also applies to special occasions such as bench testing, demonstrations and off-site configuration. Operating the terminal without proper grounding may damage both terminal and measuring circuitry, and may cause injuries in case of an accident.

Warning!

Never disconnect a secondary connection of current transformer circuit without short-circuiting the transformer's secondary winding. Operating a current transformer with the secondary winding open will cause a massive potential build-up that may damage the transformer and may cause injuries to humans.

Warning!

Never unmount the front or back cover from a powered terminal or from a terminal connected to powered circuitry. Potentially lethal voltages and currents are present.

2 Caution signs

Caution!

Always transport modules using certified conductive bags. Always handle modules using a conductive wrist strap connected to protective ground and on a suitable antistatic surface. Electrostatic discharge (ESD) may cause damage to the module.

Caution!

Do not connect live wires to the terminal. Internal circuitry may be damaged

Caution!

Always use a conductive wrist strap connected to protective ground when replacing modules. Electrostatic discharge (ESD) may damage the module and terminal circuitry.

Caution!

Take care to avoid electrical shock if accessing wiring and connection terminals when installing and commissioning.

3 Note signs

Note!

Changing the active setting group will inevitably change the terminal's operation. Be careful and check regulations before making the change.

Note!

The protection assembly is designed for a maximum continuous current of four times rated value.

Note!

Activating the setting lockout function, which prevents unauthorised changes of the settings, without proper configuration may seriously affect the terminal's operation.

Chapter 3 Overview

About this chapter

This chapter introduces the user to the installation and commissioning tasks.

1 Commissioning and installation overview

The settings for each function must be calculated before the commissioning task can start. A configuration, made in the configuration and programming tool, must also be available if the terminal does not have a factory configuration downloaded.

The terminal is unpacked and visually checked. It is preferably mounted in a cubicle or on a wall. The connection to the protection system has to be checked in order to verify that the installation was successful.

The installation and commissioning task starts with configuring the digital communication modules, if included. The terminal can then be configured and set, which means that settings and a configuration has to be applied if the terminal does not have a factory configuration downloaded. Then the operation of each included function according to applied settings has to be verified by secondary injection. A complete check of the configuration can then be made. A conformity test of the secondary system has also to be done. When the primary system has been energised a directionality check should be made.

Chapter 4 Unpacking and checking the terminal

About this chapter

This chapter contains instructions on how to receive the terminal.

1 Receiving, unpacking and checking

Procedure

1. **Remove the transport casing.**
2. **Visually inspect the terminal.**
3. **Check that all items are included in accordance with the delivery documents.**

   The user is requested to check that all software functions are included according to the delivery documents after the terminal has been energised.

4. **Check for transport damages.**

   In case of transport damage appropriate action must be taken against the latest carrier and the nearest ABB office or representative should be informed. ABB should be notified immediately if there are any discrepancies in relation to the delivery documents.

   Store the terminal in the original transport casing in a dry and dust free place, if the terminal is not to be installed or commissioned immediately. Observe the environmental requirements stated in the technical data.

Chapter 5 Installing the terminal

About this chapter

This chapter describes how to install the terminal.

1 Overview

The mechanical and electrical environmental conditions at the installation site must be within permissible range according to the technical data of the terminal. Dusty, damp places, places liable to rapid temperature variations, powerful vibrations and shocks, surge voltages of high amplitude and fast rise time, strong induced magnetic fields or similar extreme conditions should be avoided.

Sufficient space must be available in front of and at rear of the terminal to allow access for maintenance and future modifications. Flush mounted terminals should be mounted so that terminal modules can be added and replaced without excessive demounting.

2 Mounting the terminal

A suitable mounting kit must be available. Mounting kits contains all parts needed including screws and assembly instructions. The following mounting kits are available:

- 19-inch rack mounting kits, 1/2, 3/4 and 1/1 terminal width variants. See section 2.1.
- Side-by-side mounting kit. See section 2.2.
- Flush mounting kit. See section 2.3.
- Semi-flush mounting kit. See section 2.3.
- Wall mounting kit. See section 2.4.

Most of the REx 5xx terminals can be rack, flush, semi-flush or wall mounted with the use of different mounting kits. An additional box of type RHGS can be mounted to one side of a 1/2 or 3/4 terminal. The 1/1 of 19-inches wide terminal can not be semi-flush mounted due to that the mounting angles will cover the ventilating openings at the top and bottom parts.

2.1 Mounting in a 19-inch rack

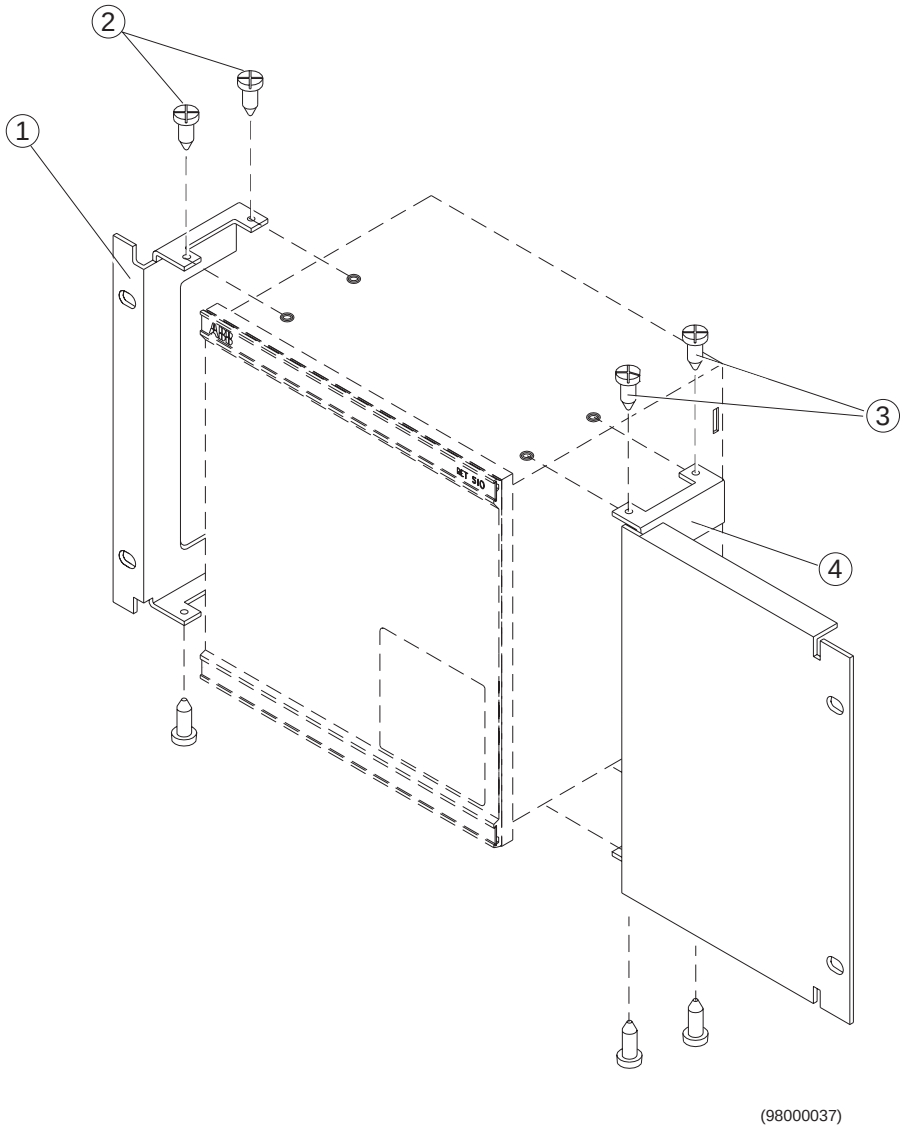

PosNo	Description
1 and 4	Mounting angle
2 and 3	TORX T20 screws

Figure 1: 19-inch rack mounting

Procedure

1. **Carefully fasten the mounting angles to the sides of the terminal.**

   Use the TORX T20 screws available in the mounting kit.

2. **Place the terminal assembly in the rack.**
3. **Fasten the mounting angles with appropriate screws.**

2.2 Mounting in a 19-inch rack with an additional box type RHGS

Make sure a side-by-side mounting kit and a suitable 19-inch rack mounting kit are available before proceeding.

Assemble the two terminals by using a side-by-side mounting kit. Then mount the brackets and install the assembled terminals in the rack as described in section 2.1.

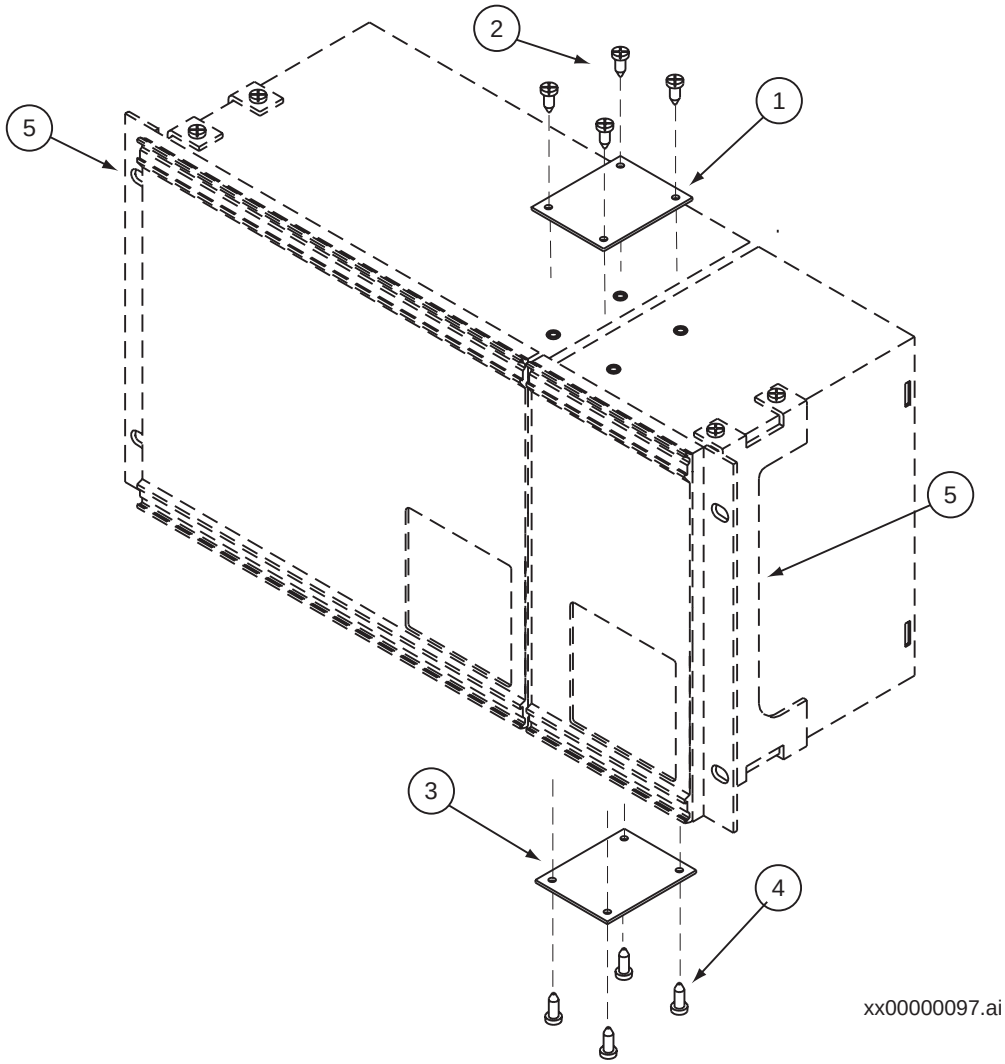

PosNo	Description
1 and 3	Side-by-side mounting plate
2 and 4	Screws (TORX T20)
5	Mounting angle

Figure 2: Side-by-side assembly

Procedure

1. **Place the two terminals next to each other on a flat surface.**
2. **Fasten a side-by-side mounting plate (PosNo 1).**

   Use four of the delivered screws.

3. **Carefully turn the two terminals up-side down.**
4. **Fasten the second side-by-side mounting plate.**

   Use the remaining four screws.

5. **Follow the instructions in section 2.1 to mount the mounting angles (PosNo 5) and install the side-by-side assembly in the rack.**

2.3 Mounting in a flush or semi-flush installation

Make sure a flush or semi-flush mounting kit is available before proceeding.

The procedure for flush and semi-flush mounting is mainly the same. In semi-flush mounts a distance frame is added. The delivered mounting seal is only necessary to fulfill IP 54.

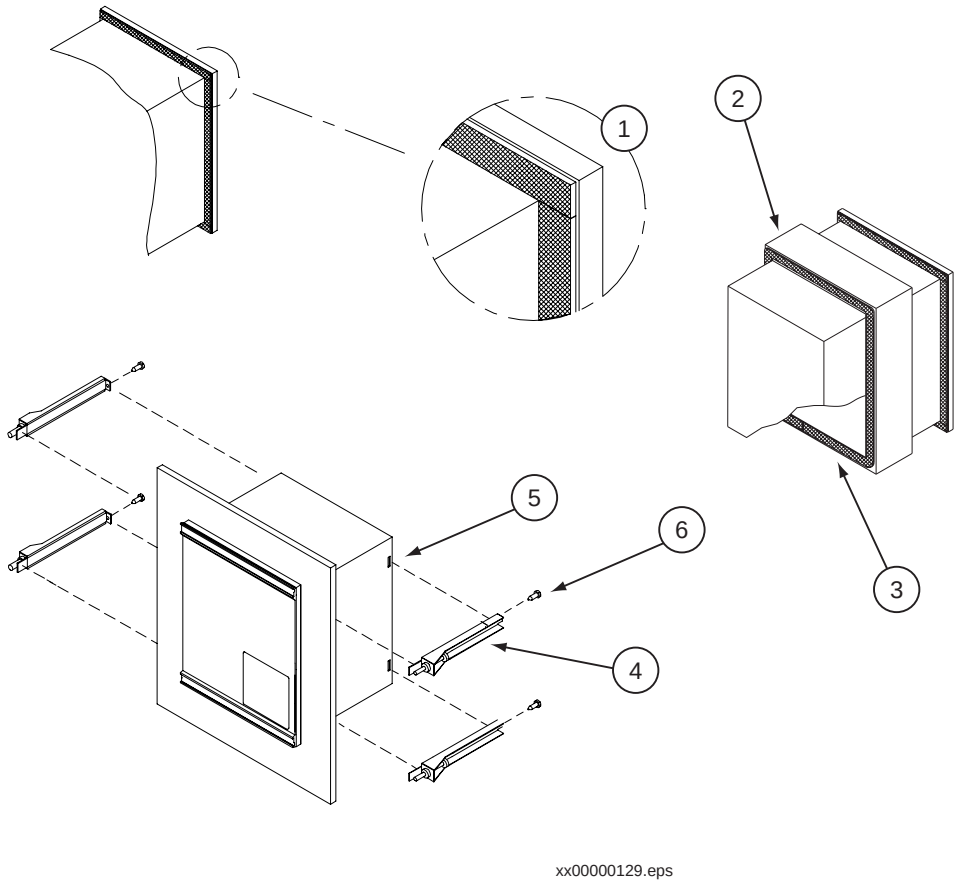

PosNo	Description
1	Sealing strip
2	Distance frame (only for semi-flush)
3	Sealing strip for distance frame (only for semi-flush)
4	Side holder
5	Groove
6	Locking screw (TORX T10)

Figure 3: Flush and semi-flush mounting

Note!

Flush or semi-flush mount cannot be used for side-by-side mounted terminals when IP 54 must be fulfilled.

Procedure

1. **Cut the sealing strip in appropriate lengths.**

   The strip is delivered with the mounting kit. In the semi-flush mounting kit two strips are delivered, one for the terminal and one self-adhering for the distance frame. The length of the strip is enough for the largest available terminal.

   Cut the strip into four, one part for each side of the terminal. When cutting, make sure no gaps will be present between each part. Preferably, seal joints should be at the corners (posNo 1).

   Repeat the procedure for the self-adhering strip which are to be adhered to the distance frame.

2. **Dispose the strip remains.**

   The remains should be source separated as soft plastic.

3. **Carefully press the cut strips into the front panel groove.**
4. **Adhere the cut strips (posNo 3) to the edge of the distance frame (posNo 2).**

   semi-flush mounting only.

5. **Make a panel cut-out.**

   See the Technical reference manual for cut-out dimensions.

6. **Insert the terminal into the cut-out.**
7. **Add and lock the side holders (PosNo 4) to the terminal.**

   Thread a side holder into the groove (posNo 5) at the back end of the terminal. Insert and lightly fasten the locking screw (posNo 6). Next, thread a side holder on the other side of the terminal, and lightly fasten its locking screw.

   Repeat this with the remaining two side holders.

8. **Lock the terminal to the cut-out.**

   Firmly tighten the locking screws. It is important that all four side holder locking screws are tightened the same in order to maintain a good and even seal in IP 54 environments.

2.4 Mounting on a wall

The mounting bars are prepared for adding DIN-rails or equivalent above and below the mounted terminal. If used, make sure all necessary parts such as rails and terminal blocks are available before starting. Make sure the wall mounting kit is available.

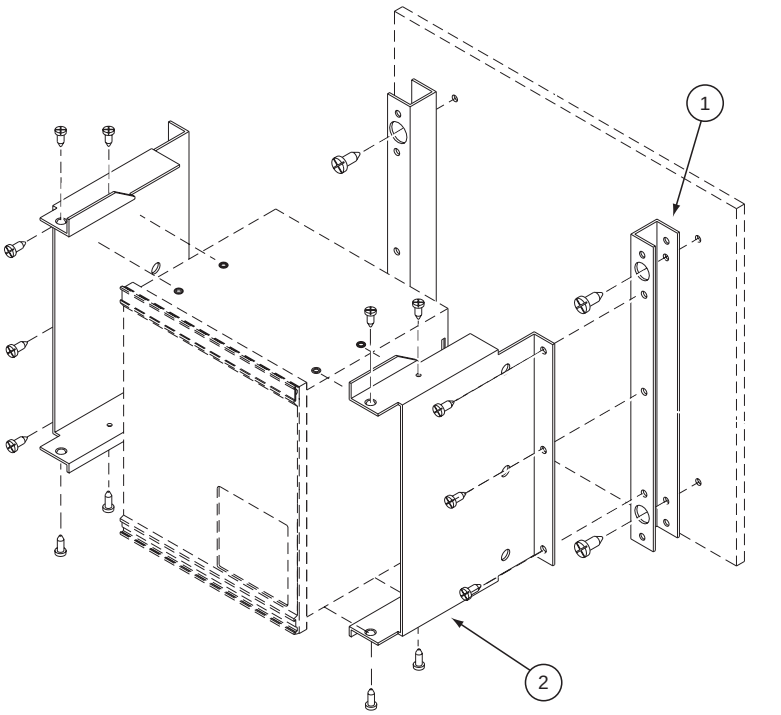

PosNo	Description
1	Mounting bar
2	Side plate

Figure 4: Wall mounting

2.4.1 Mounting the terminal on a wall

Procedure

1. **Mount the bars (posNo 1) onto the wall.**

   See the Technical reference manual for measurements.

   Depending on the wall different preparations may be needed, like drilling and inserting plastic or expander plugs (concrete/plaster-board walls) or threading (metal sheet wall).

2. **Mount the DIN-rail(s) on the mounting bars.**
3. **Mount the terminal blocks on the DIN-rail(s).**

   It is much easier to do this without the unit in place.

4. **Make all electrical connections to the terminal blocks.**

   It is much easier to do this without the unit in place.

5. **Mount the side plates (posNo 2) to the terminal.**
6. **Mount the terminal to the mounting bars.**

2.4.2 Preparing a wall mounted terminal for electrical installation

Procedure

1. **Remove all screws from one side plate.**
2. **Remove two screws from the other side plate.**
3. **Careful swing the terminal out from the wall.**

   See figure 5.

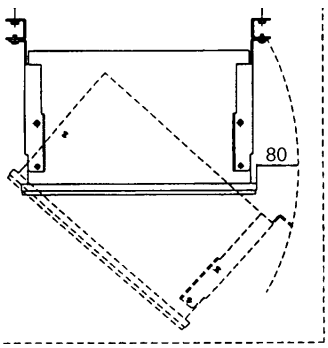

xx99000287

Figure 5: View from above over a wall mounted terminal that is prepared for electrical connection.

3 Making the electrical connections

Always make sure established guidelines for this type of terminal is followed during installation. When necessary use screened twisted-pair cables to minimize susceptibility. Otherwise use any kind of regular nonscreened tinned RK cable or equivalent.

When using screened cabling always use 360° full screen cable bushings to ensure screen coupling. Ensure that all signals of a single circuit are in the same single cable. Avoid mixing current and voltage measuring signals in the same cable. Also use separate cables for control and measuring circuits.

Note!

Screened and twisted pair cables is a requirement for galvanic communications in application with 56/64 kbit/s. The screen must be earthed at both sides of a cable.

3.1 Connecting the CT circuits

CTs are connected using back-side mounted screw connectors.

Use a solid conductor with a cross section area between 2.5-6 mm^2 (AWG20-10) or a stranded conductor with a cross section area between 2.5-4 mm^2.

3.2 Connecting the auxiliary power, VT and signal connectors

Auxiliary power, VTs and signals are connected using COMBICON (Phoenix technology) plug-in screw connectors.

Procedure

1. **Connect signals to the COMBICON plug.**
2. **Plug the connector to the corresponding back-side mounted receptable.**
3. **Lock the plug to the receptable by fastening the lock screws.**

   Use a solid or stranded conductor with a cross section area between 0.5-2.5 mm^2 (AWG24-12). Use a ferrule with plastic collar to connect two conductors, cross section area between 0.5-1.5 mm^2 (AWG20-18).

3.3 Connecting to protective ground

Connect the unit to the grounding bar of the cubicle with a green/yellow conductor, cross section at least 1.5 mm^2 (AWG18), connected to the protective ground connector at the back of the terminal.

3.4 Making the screen connection

When using screened cables always make sure screens are grounded and connected in according to applicable engineering methods. This may include checking for appropriate grounding points near the terminal, for instance, in the cubicle and/or near the source of measuring. Ensure that ground connections are made with short (max. 10 cm) conductors of an adequate cross section, at least 6 mm^2 (AWG18) for single screen connections.

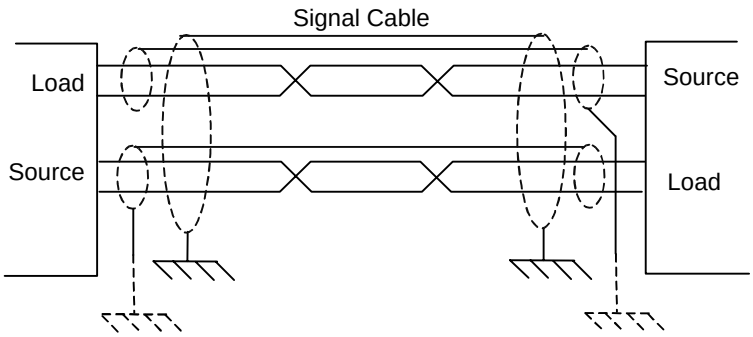

en01000189.vsd

4 Installing the optical fibres

Connectors are generally color coded; connect blue or dark grey cable connectors to blue or dark grey (receive) back-side connectors. Connect black or grey cable connectors to black or grey (transmit) back-side connectors.

Fiber optical cables are sensitive to handling. Do not bend too sharply. The minimum curvature radius is 15 cm for plastic fibers and 25 cm for glass fibers. If cable straps are used, apply with loose fit.

Caution!

Always hold the connector, never the cable, when connecting or disconnecting optical fibres. Do not twist, pull or bend the fibre. Invisible damage may increase fibre damping thus making communication impossible.

5 Installing the communication cables

When using galvanic connection between protection terminal and communication equipment or point to point galvanic connection between two protection terminals it is essential that the cable installation is carefully done. This is true regardless of type of module used, G.703, V.36, short range galvanic etc., only the possible length of the cable differs. The factors that must be taken into account is the susceptibility for noise disturbance, due to that the levels of the communication signal are very low.

For best result a cable with twisted pairs and double screens should be used, one screen for each twisted pair and one surrounding all pairs. Each signal shall utilizing its own twisted pair as in figure 6. The screen for each separate pairs shall be connected to internal screen or ground connection of equipment, if available, or in other case connected to earth close to the equipment at the **sending** end for the signal. At **receiving** end the screen shall be left floating, that is, not connected to earth.

The outer screen surrounding all pairs shall be connected to a solid earth at **each** end close to the equipment.

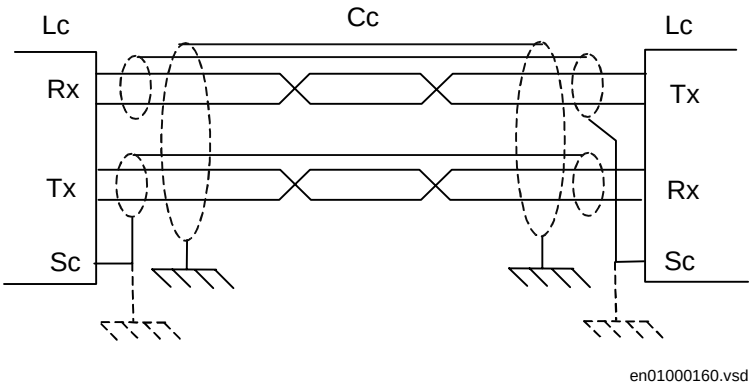

Cc	Communication cable
Lc	Line connector
Rx	Receive input
Sc	Screen (or earth/ground) connection
Tx	Transmit output

Figure 6: Communication cable installation

Note also that recommendation about cable lengths given for modules according ITU/EIA interface, not short range galvanic module, are under the assumption that the two equipment, protection terminal and communication, are within the same building and that the earthing system of the building is well carried out. It also presumes that the environment is relatively free from electromagnetic noise.

Chapter 6 Checking the external circuitry

About this chapter

This chapter describes what to check and which checks that should be made to ensure a correct connection to the external circuitry, such as auxiliary power supply, CT's and VT's. These checks must be made with the protection terminal de-energised.

1 Overview

The user must check the installation which includes verifying that the terminal is connected to the other parts of the protection system. This is done with the terminal and all connected circuits de-energised.

2 Checking the CT and VT circuits

Check that the wiring is in strict accordance with the supplied wiring diagram.

Note

Do not continue further until any errors are corrected.

Test the circuitry. The following tests are recommended:

- Polarity check.
- CT circuit current measurement (primary injection test).
- Grounding check.

The polarity check verifies the integrity of the circuits and the phase relationship. The check should be performed as close as possible to the terminal.

The primary injection test verifies the CT ratio and the wiring all the way through from the primary system to the terminal. Injection must be performed for each phase-to-neutral circuit and each phase-to-phase pair. In each case currents in all phases and the neutral line are measured.

3 Checking the power supply

Check that the value of the auxiliary supply voltage remains within the permissible range under all operating conditions. Check that the polarity is correct according to the technical data on the front plate on the terminal.

4 Checking the binary I/O circuits

4.1 Binary input circuits

Preferably, disconnect the binary input connector from the binary input cards. Check all connected signals so that both input level and polarity are in accordance with the terminal's specifications.

4.2 Binary output circuits

Preferably, disconnect the binary output connector from the binary output cards. Check all connected signals so that both load and polarity are in accordance with the terminal's specifications.

Chapter 7 Energising the terminal

About this chapter

This chapter describes the start up sequence and what to check after the terminal has been enerigsed.

1 Overview

Before the procedures in this chapter can be carried out the connection to external circuitry must have been checked which ensures that the installation was made correctly.

The user must energise the power supply to the terminal to start it up. This could be done in a numerous of ways, from energising a whole cubicle to energising a single terminal. The user should reconfigure the terminal to activate the hardware modules in order to enable the self supervision function detect eventual hardware errors. Then the terminal time must be set. The self supervision function should also be checked to verify that the terminal unit operates properly. The user could also check the software version, the terminals serial number and the installed modules and their ordering number to ensure that the terminal is according to delivery and ordering specifications.

2 Energising the terminal

When the terminal is energised the window on the local HMI remains dark. After 10 seconds the green LED starts flashing and after approximately 30 seconds the window lights up. After another 10 seconds the window displays ‘Terminal Startup’ and after about 30 seconds the main menu is displayed. The upper row should indicate ‘Ready’. A steady green light indicates a successful startup.

If the upper row in the window indicates ‘Fail’ instead of ‘Ready’ and the green LED is flashing an internal failure in the terminal has been detected. See the self supervision function in this chapter to investigate the fault.

After startup the appearance of the local HMI should be as shown in figure 7.

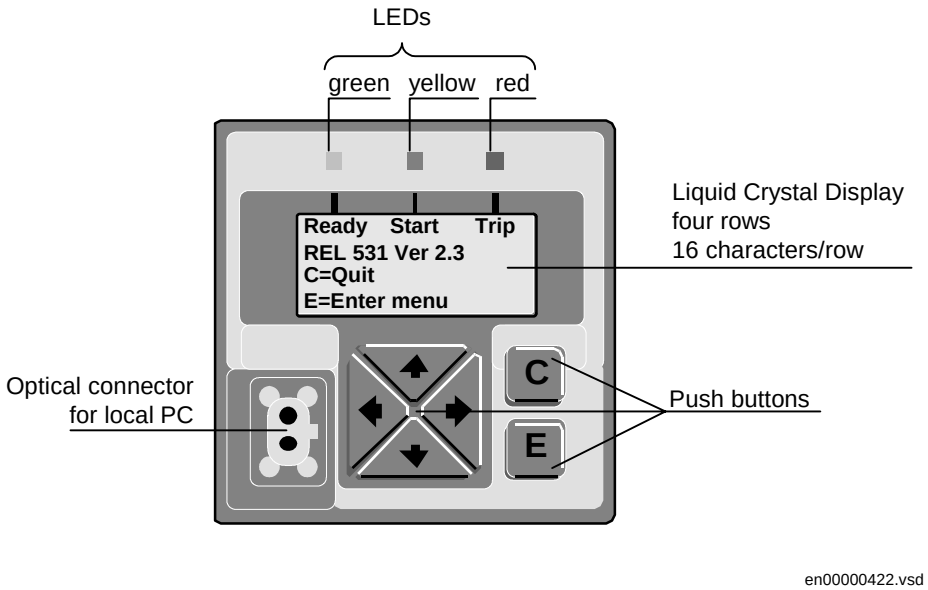

Figure 7: Example of the local HMI for, in this example, REL 531.

3 Checking the self supervision signals

3.1 Reconfiguring the terminal

I/O modules configured as logical I/O modules (BIM, BOM, IOM, DCM, IOPSM or MIM) are supervised. Not configured I/O modules are not supervised.

Each logical I/O module has an error flag that is set if anything is wrong with any signal or the whole module. The error flag is also set when there is no physical I/O module of the correct type present in the connected slot.

Procedure

1. **Browse to the 'Reconfigure' menu.**

   The Reconfigure menu is located in the local HMI under:

   Configuration/I/O-modules/Reconfigure

2. **Select 'Yes' and press 'E'.**

3.2 Setting the terminal time

This procedure describes how to set the terminal time.

1. **Display the set time dialog.**

   Navigate the menus to:

   Settings/Time

   Press the **E** button to enter the dialog.

2. **Set the date and time.**

   Use the **Left** and **Right** arrow buttons to move between the time and date values (year, month, day, hours, minutes and seconds). Use the **Up** and **Down** arrow buttons to change the value.

3. **Confirm the setting.**

   Press the **E** button to set the calendar and clock to the new values.

3.3 Checking the self supervision function

3.3.1 Navigating the menus

This procedure describes how to navigate the menus in order to find the reason of an internal failure when indicated by the flashing green LED of the HMI module.

1. **Display the self supervision menu.**

   Navigate the menus to:

   TerminalReport
   SelfSuperv

2. **Scroll the supervision values to identify the reason of the failure.**

   Use the **Left** and/or **Right** arrow buttons to scroll between values.

3.4 Self supervision HMI data

Table 1: Output signals for the self supervision function

Indicated result	Reason	Action
InternFail = OK	No problem detected.	None.
InternFail = Fail	A failure has occurred.	Check the rest of the indicated results to find the fault.
InternWarning = OK	No problem detected.	None.
InternWarning = Warning	A warning has been issued.	Check the rest of the indicated results to find the fault.
MPM-modFail = OK	No problem detected.	None.
MPM-modFail = Fail	The main processing module has failed.	Contact your ABB representative for service.
MPM-modWarning = OK	No problem detected.	None.
MPM-modWarning = Warning	There is a problem with: • the real time clock. • the time synchronization.	Set the clock. If the problem persists, contact your ABB representative for service.

Indicated result	**Reason**	**Action**
ADC-module = OK	No problem detected.	None.
ADC-module = Fail	The A/D conversion module has failed.	Contact your ABB representative for service.
Slot04BIM1 = Fail (Example data, se following section for details)	I/O module communication has failed.	Check that the I/O module has been configured and connected to the IOP1- block. If the problem persists, contact your ABB representative for service.
RealTimeClock = OK	No problem detected.	None.
RealTimeClock = Warning	The real time clock has been reset.	Set the clock.
TimeSync = OK	No problem detected.	None.
TimeSync = Warning	No time synchronization.	Check the synchronization source for problems. If the problem persists, contact your ABB representative for service.

Chapter 8 Configuring the digital communication modules

About this chapter

This chapter contains instructions on how to configure the digital communication modules, such as galvanic and optical modems.

1 Configuring the fibre optical modem

Two different levels of optical output power can be set on the HMI under:

Configuration/TerminalCom/RemTermCom/OptoPower

For the optical module, the optical output power has to be set according to the attenuation of the fibre optic link.

For multimode fibres:

- If the attenuation is less than 6 dB, use Low setting
- If the attenuation is higher than 10 dB, use High setting
- If the attenuation is between 6 and 10 dB, use either High or Low setting

For single-mode fibres:

- If the attenuation is higher than 5 dB, use High setting
- If the attenuation is between 0 and 5 dB, use either High or Low setting

To achieve the best operation, the optical communication modules at both terminals must be synchronised. To fulfil this, one terminal acts as a Master and the other as a Slave. This is set under:

Configuration/TerminalCom/RemTermCom/CommSync

This setting should not be mixed up with the Master-Slave setting for the differential function.

When communicating with FOX20 or FOX6Plus, the setting should be Slave.

When operating over dedicated fibres the setting shall be Master at one terminal and Slave at the other.

2 Configuring the short range fibre optical modem

No setting is available for the short range fiber optical modem on the HMI. There are however some that can be made on a DIP-switch located behind the cover around the fibre optic connectors at the back of the terminal according to figure 8. After the fibres has been disconnected, if attached, the cover plate can be removed just by pulling at the middle of the cover plate.

Note!

If handled carefully the cover plate can be removed also with the fibres attached.

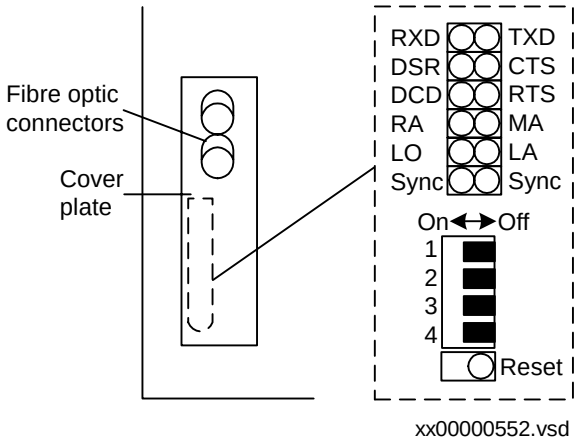

Figure 8: Setting and indications for short range optical modem

Switch 3 and 4 are used to set the source of timing. The function is according to setting of timing signal, table 2. When using the modem for optical point-to-point transmission, one modem should be set for locally created timing and the other for timing recovered from received signal. When the modems are communicating with a transceiver 21-15X or 16X the modems shall be set for timing recovered from received optical signal, see setting of timing signal.

The module can also synchronise received data with the send clock. This is not normally necessary in this application. Synchronisation ON/OFF is controlled by switch 2, which shall normally be set in OFF position. When the module is set for synchronisation (switch 2 = ON) switch 1 must be set in the position corresponding to the Sync LED that is brightest. If both have the same brightness the switch can be set in any position.

Note!

After any change of settings, the modem has to be reset by the Reset button located below the DIP-switch.

Table 2: Setting of timing signal

Switch no.		Function
3	**4**	
OFF	OFF	Timing created by the modem
OFF	ON	Timing recovered from received optical signal
ON	OFF	Timing created by the differential function
ON	ON	No timing, the data transmission will not work

There are also some jumpers on the circuit board that has to be correctly set. One, S4 according to figure 10, is for changing the functionality between article number 1MRK 001 370-BA (marked 1MRK001471-BA) and 1MRK 001 370-DA (marked 1MRK001471-DA). The difference between these two is that the signal is inverted in one compared to the other.

The other jumper is S3 that has to be in bottom position, as marked in figure 10. If it is in top position the communication will not work. (In top position the transmit clock is supposed to be created in the CPU on the MPM module which is not possible). On JTAG/ISP there shall be no jumpers inserted.

Note!

For a homogenous system, that is when the set up are identical at both terminals, the article number does not matter. When using a set up according to figure 9 only at one end and for example a direct G.703 connection at the other end a short range fibre optical modem according to 1MRK 001 370-DA must be used. Using a short range fibre optical modem according to 1MRK 001 370-BA will not work.

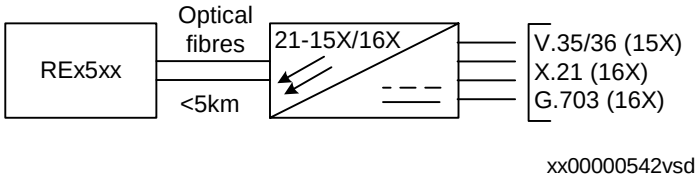

Figure 9: Multiplexed link, short range fibre optical connection

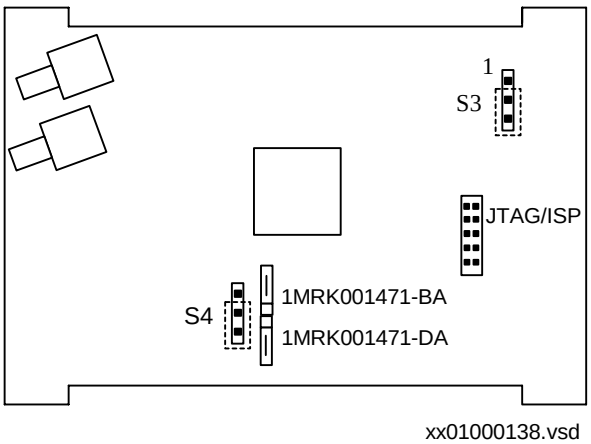

Figure 10: Jumper location on short range optical modem

The jumpers are accessible after the modem has been pulled out. This is done by first removing all green 18-pin connectors at the back, then remove all screws holding the back plate. After the back plate has been removed the modem can be pulled out.

Note!

Only pull out the modem not the whole double size Euro-card. After the jumper settings has been changed put everything back in reverse order.

Note!

All electronic are sensitive to electrostatic discharge. Proper action must be taken at the work place to avoid electrostatic discharge!

There are also some indication for supervision of the communication channel that can be seen when the cover around the fibre optic connectors is removed. These LED's are found above DIP-switch. The function of the LED's are explained in table 3.

Table 3: Indications

LED	Colour	Explanation
RTS	Yellow	Request to send
CTS	Yellow	Clear to send
DSR	Yellow	Data communication correct
DCD	Yellow	Detection of carrier signal
TXD	Yellow	Transmitted data
RXD	Yellow	Received data
RA	Red	Remotely detected problem with link
MA	Red	Memory function for problem with link
LO	Green	Link operation correctly
LA	Red	Locally detected problem with link
Sync	Green	Used when synchronisation is selected

3 Configuring the short range galvanic modem

No setting is available for the short range galvanic modem on the HMI. There are however some that can be made on a DIP-switch located behind the cover around the line connector at the back of the terminal according to figure 11. After the connector has been disconnected, if attached, the cover plate can be removed just by pulling at the middle of the cover plate. No settings are located on the circuit board.

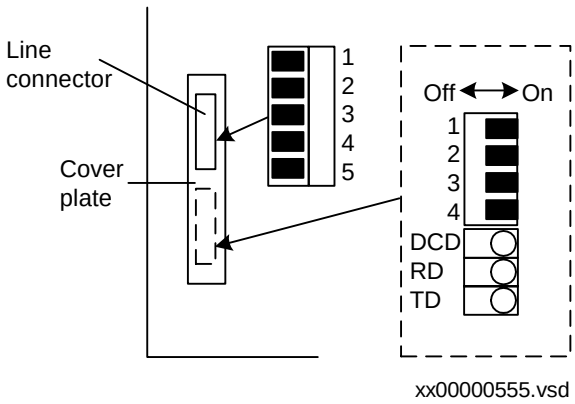

Figure 11: Setting and indications for short range galvanic modem

Only switch 1 and 2 are used on the DIP-switch. The function is according to the setting of timing signal, see table 4. In normal operation switch 1 is set in ON position at one end and switch 2 is set ON at the other end. The rest of the switches is set OFF.

Table 4: Setting of timing signal

Switch no.		**Function**
1	**2**	
OFF	OFF	Unpredictable, normally locally created timing
OFF	ON	Timing recovered from received signal
ON	OFF	Locally created timing
ON	ON	Timing recovered from received signal

There are also some indication for supervision of the communication channel that can be seen when the cover around the fibre optic connectors is removed. These LED’s are found below the DIP-switch. The function of the LED’s are explained in table 5.

Table 5: Indications

LED	Explanation
DCD	Detection of carrier signal
TD	Transmitted data
RD	Received data

4 Configure the interface modules for V.36, X.21 and RS530

The connector for X.21 is a 15 pin DSUB according to X.21 standard. For RS530 the connector is a 25 pin DSUB according to RS530 standard. The same 25 pin DSUB is also used for the V.36 connection contrary to the 37 pin DSUB listed in the standard. The pin lay-out is found in figure 12 and the explanation to designation in table 6.

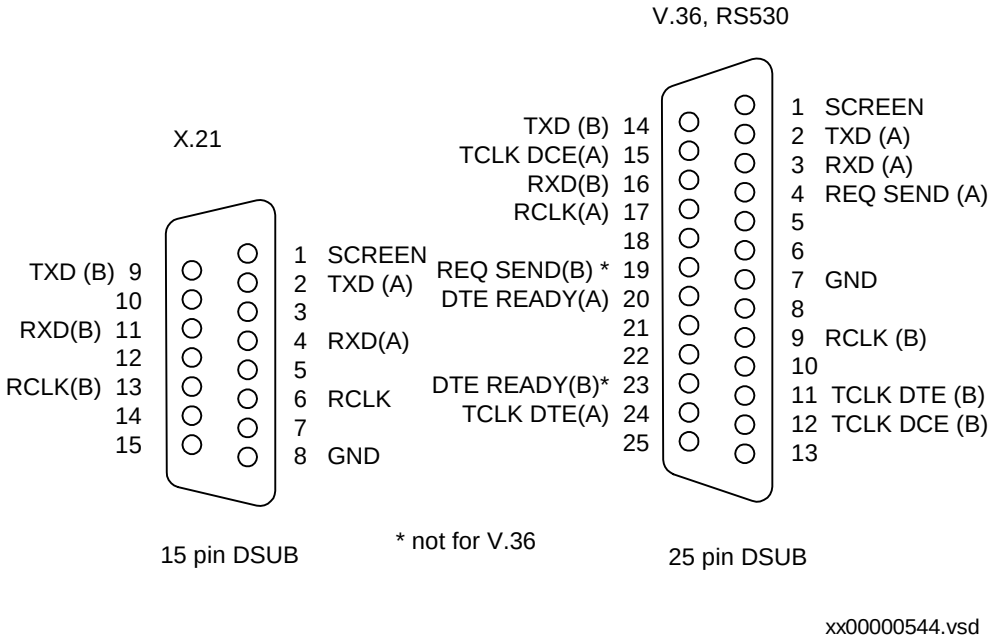

Figure 12: DSUB connectors

Table 6: DSUB connector explanation

Designation	Explanation
A	Designations of terminals according to CCITT, EIA etc.
B	Designations of terminals according to CCITT, EIA etc.
DCE	Data communication equipment (= multiplexer, etc.)
DTE	Data terminal equipment (= protection)
DTE READY	Data terminal ready (follows auxiliary voltage)
GND	Earth (reference for signals)
RCLK	Receiver signal timing

Designation	Explanation
REQ SEND	Request to send (follows auxiliary voltage)
RXD	Received data
SCREEN	Connection of cable screen
TCLK DCE	Transmitter signal timing from DCE
TCLK DTE	Transmitter signal timing from DTE
TXD	Transmitter data

For the co-directional operation the transmission rate of the transmitted signal must be set.This setting, 56 or 64 kbit/s, is done on the HMI under:

Configuration/TerminalCom/RemTermCom/BitRate

For X.21 and contra-directional operation no settings are available.

For the signals used by the protection, the communication module for V.36 also fulfils the older recommendation for V.35.

5 Configuring the interface modules for G.703 co-directional

No setting is available for the G.703 modem on the HMI. There are however some that can be made on a DIP-switch located behind the cover around the line connector at the back of the terminal according to figure 13. After the connector has been disconnected, if attached, the cover plate can be removed just by pulling at the middle of the cover plate. No settings are located on the circuit board.

Only switch 1 is used on the DIP-switch. In position ON the timing for transmission is created internally in the modem. In position OFF the timing for transmission is recovered from the received G.703 signal. Normally position OFF shall be used when the protection is connected to a multiplexer or other communication equipment.If used in back to back operation switch 1 is set in ON position at one end and in OFF position at the other end. The rest of the switches shall be set OFF.

There are also some indication for supervision of the communication channel that can be seen when the cover around the fibre optic connectors is removed. These LED's are found below the DIP-switch. The function of the LED's are explained in table 7.

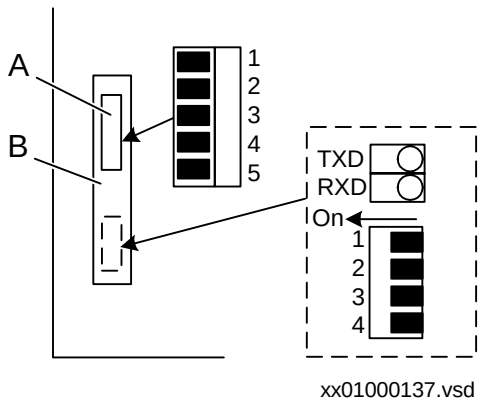

A	Line connector
B	Cover plate

Figure 13: G.703 modem, connection, indications and settings

Table 7: Indications

LED	Explanation
TD	Transmitted data
RD	Received data

Chapter 9 Setting and configuring the terminal

About this chapter

This chapter describes how to set the terminal, either through a PC or the local HMI, and download a configuration to the terminal in order to make commissioning possible.

The chapter does not contain instructions on how to create a configuration or calculate settings. Please consult the application manual for further information about how to calculate settings.

1 Overview

The customer specific values for each setting parameter and a configuration file has to be available, if the terminal is not delivered with a configuration, before the terminal can be set and configured.

Each function included in the terminal has several setting parameters which has to be set in order to make the terminal behave as intended. A default value is provided for each parameter from factory. A setting file can be prepared using the parameter setting tool (PST), which is available in the CAP 535 package.

Use the CAP 531 configuration tool to verify if the terminal has the expected configuration. A new configuration is performed with the CAP tool. The binary outputs can be selected from a signal list where the signals are grouped under their function names. It is also possible to specify a user-defined name for each input and output signal.

All settings can be:

- Entered manually through the local HMI.
- Downloaded from a PC, either locally or remotely using SMS/SCS. Front or rear port communication has to be established before the settings can be downloaded.

The configuration can only be downloaded through the front connector on the local HMI.

Note!

Be sure to configure the functional input HMI--BLOCKSET to only one of the available binary inputs before setting the parameter SettingRestrict to Block in the local HMI.

2 Entering settings through the local HMI

Each of the included functions in the terminal has to be set and this can be performed through the local HMI. The user must browse to the desired function and enter the appropriate value. The parameters for each function can be found in the local HMI. See the technical reference manual for a complete list of setting parameters for each function. Some of the included functions may not be used. In this case the user can set the parameter “Operation” to “Off” to disable the function.

Some settings can only be set through the local HMI, such as the setting access and the slave and baud rate when communicating with a PC software. The setting access can be blocked by the binary input signal HMI--BLOCKSET. When this signal is active all information, including the setting values, are still available to the user.

3 Downloading settings and configuration from a PC

3.1 Establishing front port communication

When a PC is used to download settings and configuration, you need the terminal toolbox CAP 535 (including CAP 531 and PST) or CAP 540 in the PC.

A special cable is needed when connecting a PC to the front of the REx 5xx terminal. This cable can be ordered from ABB Automation Products AB. It must be plugged into the optical contact on the left side of the local HMI. The other end of the cable shall be plugged directly into the COM-port on the PC. The cable includes an optical contact, an opto/electrical converter and an electrical cable with a standard 9-pole D-sub contact. This ensures a disturbance-free and safe communication with the terminal.

When communicating from a PC, the slave number and baud rate (communication speed) settings must be equal in the PC-program and in the REx 5xx terminal.

Procedure

1. **Plug the cable to the optical contact on the local HMI.**
2. **Plug the other end of the cable to the COM port of the PC.**
3. **Set the slave number and baud rate in the terminal.**

   The slave number and baud rate settings in the REx 5xx terminal is done on the local HMI at:

   Configuration/TerminalCom/SPACom/Front

4. **Set the slave number and baud rate in the PC-program.**

   The slave number and baud rate must be the same as in the terminal.

3.2 Establishing rear port communication

Settings can be performed via any of the optical ports at the rear of the REx 5xx terminal. When a PC is connected to the SMS system, the CAP 535 and the PST softwares are used. Settings can also be done via the SCS system, based on MicroLIBRARY.

3.2.1 Using the SPA/IEC rear port

For all setting and configuration via the SPA communication bus, the SPA/IEC 870-5-103 port on the rear, it is necessary to first inactivate the restriction for settings. Otherwise, no setting is allowed. This setting only applies for the SPA/IEC 870-5-103 port during SPA bus communication. The parameter can only be set on the local HMI, and is located at:

Configuration/TerminalCom/SPACom/Rear/SettingRestrict

It is also possible to permit changes between active setting groups with ActGrpRestrict in the same menu section.

When communicating with SMS or SCS via the SPA/IEC 870-5-103 port, the slave number and baud rate (communication speed) settings must be equal in the PC-program and in the REx 5xx terminal.

Using the SPA rear port

The slave number and baud rate settings of the rear SPA/IEC 870-5-103 port on the REx 5xx terminal, for SPA bus communication, is done on the local HMI at:

Configuration/TerminalCom/SPACom/Rear

Using IEC 870-5-103 rear port

The slave number and baud rate settings of the rear SPA/IEC 870-5-103 port on the REx 5xx terminal, for IEC 870-5-103 bus communication, is done on the local HMI at:

Configuration/TerminalCom/IECCom/Communication

3.2.2 Using LON rear port

The LON port is not affected by eventual restricted settings valid for the SPA/IEC port. When communicating via the LON port, the settings are done with the LNT, LON Network Tool. The settings are shown on the local HMI at:

Configuration/TerminalCom/LON Com

From this menu, it is also possible to send the “ServicePinMsg” to the LNT.

3.3 Downloading the configuration and setting files

When downloading a configuration to the REx 5xx terminal with the CAP 531 configuration tool, the terminal is automatically set in configuration mode. When the terminal is set in configuration mode, all functions are blocked. The red LED on the terminal flashes, and the green LED is lit while the terminal is in the configuration mode.

When the configuration is downloaded and completed, the terminal is automatically set into normal mode. For further instructions please refer to the users manuals for CAP 535 and PST.

Chapter 10 Establishing connection and verifying the SPA/IEC-communication

About this chapter

This chapter contains instructions on how to establish connection and verify that the SPA/IEC-communication operates as intended, when the terminal is connected to a monitoring or control system via the rear SPA/IEC port.

1 Entering settings

If the terminal is connected to a monitoring or control system via the rear SPA/IEC port, the SPA/IEC port has to be set either for SPA or IEC use.

1.1 Entering SPA settings

When using the IEC protocol, the rear SPA/IEC port must be set for IEC use.

The SPA/IEC port is located at terminal X13 on the rear side of the terminal. Only optical fibres, plastic fibres with connector of type HFBR or glass fibres with connectors of type ST can be used.

Procedure

1. **Set the operation of the rear SPA/IEC port to “SPA”.**

   The operation of the rear SPA/IEC port can be found on the local HMI at:

   Configuration/TerminalCom/SPA-IECPort

   Now the SPA/IEC port operates as a SPA port.

2. **Set the slave number and baud rate for the rear SPA port**

   The slave number and baud rate can be found on the local HMI at:

   Configuration/TerminalCom/SPACom/Rear

   Set the same slave number and baud rate as set in the SMS system for the terminal.

1.2 Entering IEC settings

When using the IEC protocol, the rear SPA/IEC port must be set for IEC use.

The SPA/IEC port is located at terminal X13 on the rear side of the terminal. Only optical fibres, plastic fibres with connector of type HFBR or glass fibres with connectors of type ST can be used.

Procedure

1. **Set the operation of the rear SPA/IEC port to “IEC”.**

   The operation of the rear SPA/IEC port can be found on the local HMI at:

   Configuration/TerminalCom/SPA-IECPort

   Now the SPA/IEC port operates as an IEC port.

2. **Set the slave number and baud rate for the rear IEC port**

   The slave number and baud rate can be found on the local HMI at:

   Configuration/TerminalCom/IECCom/Communication

   Set the same slave number and baud rate as set in the IEC master system for the terminal.

3. **Set the main function type of the terminal.**

   The main function type can be found on the local HMI at:

   Configuration/TerminalCom/IECCom/FunctionType

   The main function type can be set to values from 1 to 255 according to the standard. The value zero is default and corresponds to not used. Examples of values that can be used are:

Table 8: Main function type examples

Value	Function type according to IEC 60870-5-103
128	Distance protection
160	Overcurrent protection
192	Line differential protection

If the setting “OpFnType” is set to “ON” then the set value for function type will be used for all event blocks and the disturbance recorder, otherwise the setting on each event block and the disturbance recorder will decide the function type of that function block.

2 Verifying the communication

2.1 Verifying SPA communication

To verify that the rear SPA communication with the SMS/SCS system is working, there are some different methods. Choose one of the following.

Procedure

1. **Use a SPA-emulator and send “RF” to the terminal. The answer from the terminal should be “REx500 23”.**
2. **Generate one binary event by activating a function which is configured to an event block where the used input is set to generate events on SPA. The configuration must be made with the CAP5xx software. Verify that the event is presented in the SMS/SCS system.**

During the following tests of the different functions in the terminal, verify that the events and indications in the SMS/SCS system are as expected.

2.2 Verifying IEC communication

To verify that the IEC communication with the IEC master system is working, there are some different methods. Choose one of the following.

Procedure

1. **Use a protocol analyzer and record the communication between the terminal and the IEC master. Check in the protocol analyzer’s log that the terminal answers the master messages.**
2. **Generate one binary event by activating a function which is configured to an event block where the used input is set to generate events on IEC. The configuration must be made with the CAP5xx software. Verify that the event is presented in the IEC master system.**

During the following tests of the different functions in the terminal, verify that the events and indications in the IEC master system are as expected.

Chapter 11 Verifying settings by secondary injection

About this chapter

This chapter describes how to verify that the protection functions operates correctly according to the settings. Only the tested function should be in operation.

1 Overview

Required tools for testing of a terminal:

- Calculated settings
- Configuration diagram
- Terminal diagram
- Technical reference manual
- Three-phase test equipment

The terminal has to be set and configured before the testing can start.

The terminal diagram, available in the Technical reference manual, is a general diagram for the terminal. But note that the same diagram is not always applicable for each specific delivery (especially for the configuration of all the binary inputs and outputs). It is for this reason necessary to check before testing that the available terminal diagram corresponds to the terminal.

The Technical reference manual contains application and functionality summaries, function blocks, logic diagrams, input and output signals, setting parameters and technical data sorted per function.

The test equipment should be able to provide a three-phase supply of voltages and currents. The magnitude of voltage and current as well as the phase angle between voltage and current must be variable. The voltages and currents from the test equipment must be obtained from the same source and they must have a very small harmonic contents. If the test equipment cannot indicate the phase angle, a separate phase-angle meter is necessary.

Prepare the terminal for test before testing a particular function. Consider the logic diagram of the tested protection function when performing the test. All included functions in the terminal are tested according to the corresponding test instructions in this chapter. The functions can be tested in any order according to user preferences and the test instructions are therefor presented in alphabetical order. Only the functions that are used (Operation is set to On) should be tested.

The response from a test can be viewed in different ways:

- Binary outputs signals
- Service values in the local HMI (logical signal or phasors)
- A PC with CAP (configuration software) in debug mode

All used setting groups should be tested.

Note!

This terminal is designed for a maximum continuous current of four times the nominal current.

Note!

Please observe the measuring accuracy of the terminal, the test equipment and the angular accuracy for both of them.

Note!

Please consider the configured logic from the function block to the output contacts when measuring the operate time.

2 Preparing for test

2.1 Overview

This section describes how to prepare the terminal in order to verify settings.

The preparation start with preparing the connection to the test switch if included. This means connecting the test equipment according to a valid terminal diagram for the specific REx 5xx terminal. The terminal can then be set in test mode in order to facilitate the test of individual functions and prevent unwanted operation from functions other than the tested. The test switch should then be connected to the terminal. The user could also verify the connection and that the analog inputs signals are measured correctly by injecting a three-phase current and voltage. The tested function should then be released. The disturbance report settings could be checked to ensure that correct indications are given. The user could also identify the function to test in the technical reference manual to retrieve signals and parameters names etc.

2.2 Preparing the connection to the test equipment

The REx 5xx terminal can be equipped with a test-switch of type RTXP 24. The test-switch and its associated test plug handle (RTXH 24) are a part of the COMBITEST system which gives a secure and convenient testing of the terminal.

The test-handle can be plugged into the test-switch or withdrawed from the test-switch to the intermediate position. In this position, the trip circuits are blocked, the current circuits are short circuited. The voltage and current circuits are still connected to the relay. The test-handle can be plugged into the test-switch or removed from the test-switch completely by releasing the top and bottom latches on the handle.

When the test-handle is fully inserted into the test-switch, all current circuits on the transformers side are short-circuited and all voltage circuits and trip circuits are opened, except for terminal 1 and 12. They are used for dc supply of the REx 5xx terminal. The test equipment connected to the test-handle is automatically connected to the terminal.

If a test switch is not used necessary actions need to be taken according to circuit diagram.

Warning!

Never disconnect a secondary connection of current transformer circuit without short-circuiting the transformer's secondary winding. Operating a current transformer with the secondary winding open will cause a massive potential build-up that may damage the transformer and may cause injuries to humans.

2.3 Setting the terminal in test mode

The terminal can be set in test mode before test. This means that all included functions can be blocked or released as decided during the test. In this way, it is possible to test slower back-up measuring functions without the interference of faster measuring functions. Test mode is indicated when the yellow LED is flashing.

Procedure

1. **Browse to the 'Operation' menu and press 'E'.**

   The Operation menu is located in the local HMI under:

   Test/TestMode/Operation

2. **Choose 'On' and press 'E'.**
3. **Press 'C' twice to exit the menu.**

   The dialog 'Save testGroup?' appears.

4. **Choose 'Yes' and leave the menu.**

   The window repeatedly displays 'Busy' and after that the yellow LED starts flashing which indicates that the terminal is in test mode.

2.4 Connecting test equipment to the terminal

Before testing, connect the testing equipment according to the valid terminal diagram for each specific REx 5xx terminal. Pay special attention to the correct connection of the input and output current terminals, and to the connection of the residual current. Check that the input and output logical signals in the logic diagram for the tested function are configured to the corresponding binary inputs and outputs of the tested terminal.

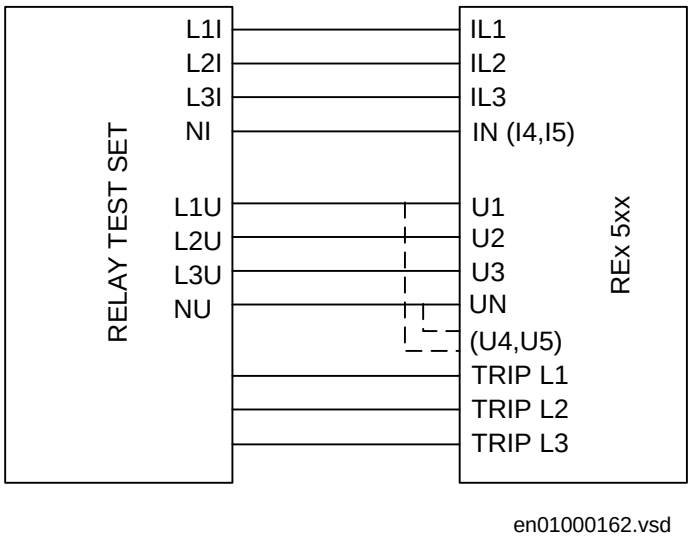

Figure 14: Connection of the test set to the REx 5xx terminal.

2.5 Verifying the connection and the analog inputs

The user must verify that the connection and that the analog signals are measured correctly.

Procedure

1. **Inject a symmetrical three-phase current and voltage at rated value.**
2. **Compare the injected value with the measured value.**

   The phasor menu is located in the local-HMI under:

   ServiceReport/Phasors/Primary and Secondary

   Consider set ratio factors for CT's and VT's.

3. **Compare the frequency reading with the set frequency and the direction of the power with the injected power.**

   The frequency and active power are located in the local-HMI under:

ServiceReport/ServiceValues

4. **Inject a unsymmetrical three-phase current and voltage at rated value in two phases.**
5. **Compare the injected value with the measured value.**

   The phasor menu is located in the local-HMI under:

   ServiceReport/Phasors/Primary and Secondary

2.6 Releasing the function(s) to be tested

The user can release the function(s) to be tested. This is done to set only the tested function(s) in operation and prevent other functions from operating. The user can release the tested function(s) by setting the corresponding parameter under BlockFunctions to NO in the local HMI. When testing a function in this blocking feature, remember that not only the actual function must be activated, but the whole sequence of interconnected functions (from measuring inputs to binary output contacts), including logic and so on. Before starting a new test mode session the user should scroll through every function to ensure that only the function to be tested (and the interconnected ones) are set to NO. A function is also blocked if the BLOCK input signal on the corresponding function block is active, which depends on the configuration. The user should therefore ensure that the logical status of the BLOCK input signal is equal to 0 for the tested function. The user could also individually block event blocks to ensure that no events are reported to remote station during the test.

Note!

The function is blocked if the corresponding setting under the BlockFunctions menu remains on and the TEST-INPUT signal remains active. All functions that where blocked or released from previous test mode session are still valid when a new test mode session is entered.

Procedure

1. **Browse to the 'BlockFunctions' menu.**

   The BlockFunctions menu is located in the local HMI under:

   Test/TestMode/BlockFunctions

2. **Browse to the function that should be released.**

   Use the left and right arrow buttons. Press 'E' when the desired function has been found.

3. **Select ‘No’.**
4. **Press ‘C’ twice to leave the menu.**

   The ‘Save TestGroup?’ dialog appears.

5. **Choose ‘Yes’ leave the menu.**

2.7 Checking the disturbance report settings

The terminal must be set in testmode (Operation=ON) to activate the disturbance report settings.

The user can select how the disturbances are indicated on the local HMI during the test. The user can for example select if the disturbance summary should be stored, scrolled on the local HMI or if LED information should be stored. Scroll to the disturbance report settings which are located in the local HMI under:

Test/TestMode/DisturbReport

Table 9: Disturbance report settings

Operation	Disturb-Summary	Then the results are...
Off	Off	• Disturbances are not stored. • LED information is not displayed on the HMI and not stored. • No disturbance summary is scrolled on the HMI.
Off	On	• Disturbances are not stored. • LED information (yellow - start, red - trip) are displayed on the local HMI but not stored in the terminal. • Disturbance summary is scrolled automatically on the local HMI for the two latest recorded disturbances, until cleared. • The information is not stored in the terminal.
On	On or Off	• The disturbance report works as in normal mode. • Disturbances are stored. Data can be read from the local HMI, a front-connected PC, or SMS.- LED information (yellow - start, red - trip) is stored. • The disturbance summary is scrolled automatically on the local HMI for the two latest recorded disturbances, until cleared. • All disturbance data that is stored during test mode remains in the terminal when changing back to normal mode.

3 Current circuit supervision (CTSU)

Prepare the terminal for verification of settings as outlined in section “Preparing for test” in this chapter.

The current circuit supervision function is conveniently tested with the same 3-phase test set as used when testing the measuring functions in the REx 5xx.

Procedure

1. **Check the input circuits and the operate value of the I_{MinOp} current level detector by injecting current, one phase at a time.**
2. **Check the phase current blocking function for all three phases by injecting current, one phase at a time.**

   The output signals shall reset with a delay of 1 s when the current exceeds 1.5·I1b.

3. **Inject a current 0.90·I1b to phase L1 and a current 0.15·I1b to the reference current input (I5).**
4. **Decrease slowly the current to the reference current input and check that blocking is obtained when the current is about 0.10·I1b.**
5. **Continue to test another function or complete the test by setting the test mode to off.**

4 Definite and inverse time-delayed residual overcurrent protection (TEF)

Prepare the terminal for verification of settings as outlined in section “Preparing for test” in this chapter.

Normally, the test of the earth-fault overcurrent protection is made in conjunction with the testing of the distance protection functions, using the same multiphase test-set. Observe that the polarising voltage is equal to 3Uo.

4.1 Checking the operate values of the current measuring elements

Procedure

1. **Set the logical input signals to logical 0 and note on the local HMI that the TEF--TRIP and the TEF--TRSOTF signal is not activated (= logical 0).**

   Values of the logical signals belonging to the time delayed residual overcurrent protection are available under menu tree:

   ServiceReport/Functions/EarthFault/TimeDelayEF

2. **Set the polarising voltage to 2% of U_b and the phase angle between voltage and current to 65°, the current lagging the voltage.**
3. **Check that the operate current of the forward directional element is equal to the IN> Dir setting.**

   The IN> Dir function activates the TEF--STFW output.

4. **Check with angles φ = 20° and 110° that the measuring element operates when $3I_0 \cos(65° - \varphi) >= IN>$ Dir.**
5. **Reverse the polarising voltage (φ = 180° + 65° = 245°) and check that the operate current of the reverse directional element is 0.6 · IN> Dir.**

   The function activates the TEF--STRV output.

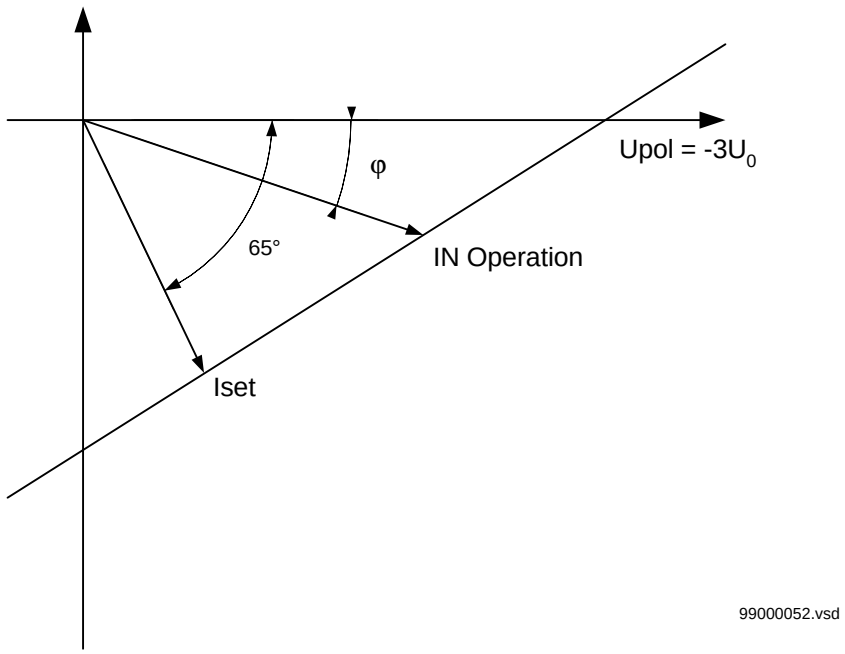

Figure 15: Measuring characteristic of the directional element.

6. **To activate the directional function, set Direction = Directional.**
7. **Set the polarising voltage to 2% of U_b and the phase angle between voltage and current to 65°.**
8. **Check the operate current of the IMin function.**

   The function activates the TEF--START output.

9. **When independent time delay (definite) is selected, check the operate time of the t1 timer by injecting a current two times the set IMin operate value.**

   When inverse time delay is selected, check the operate time at three points of the inverse characteristic. The formulas for operate time for different types of inverse time delay curves are shown in table 10.

Table 10: Operate time formulas

Characteristics	Operate time (s)
Normal inverse	$t = \frac{0.14}{I^{0.02} - 1} \cdot k$ (Equation 1)
Very inverse	$t = \frac{13.5}{I - 1} \cdot k$ (Equation 2)
Extremely inverse	$t = \frac{80}{I^{2} - 1} \cdot k$ (Equation 3)
Logarithmic inverse	$t = 5.8 - (1.35 \cdot \ln I)$ (Equation 4)

Where:

I is a multiple of set current $3I_0$>

k is a time multiplying factor, settable in the range of 0.05 to 1.10

Also check the tMin (minimum operate time) and IMin (minimum operate current) functions.

10. **Activate the TEF--BC input to check the function of the switch-onto-fault logic.**
11. **Check that the TEF--TRSOTF output is activated with a 300 ms time delay when injecting a current two times the set IMin operate value in forward direction.**
12. **Set the phase angle of the polarising voltage to φ =245° and check that the directional current function and the switch-onto-fault logic gives no operation when the current is in the reverse direction.**
13. **Connect the rated DC voltage to the TEF--BLOCK configured binary input and switch on the fault current.**

    No TEF--TRIP nor TEF--START signal should appear.

14. **Switch off the fault current.**

15. **Connect the rated DC voltage to the TEF--BLKTR configured binary input and switch on the fault current.**

    No TEF--TRIP nor TEF--TRSOTF should appear. But the output TEF--START shall be activated.

16. **Continue to test another function or complete the test by setting the test mode to off.**

5 Disturbance recorder (DRP)

Evaluation of the results from the disturbance recording function requires access to an SMS workstation either permanently connected to the terminal or temporarily connected to the serial port on the front. The following software packages must be installed in the workstation:

SMS-BASE	Common functions
RECOM	Collection of the disturbance data
REVAL	Evaluation and printouts of the recorded data

It could be useful to have a printer for hard copies. The behavior of the disturbance recording function can be checked when protective functions of the terminal are tested. When the terminal is set to operate in test mode, there is a separate setting for operation of the disturbance report, which also affects the disturbance recorder.

A manual trig can be started any time. This results in a snap-shot of the actual values of all recorded channels.

6 Event function (EV)

During testing, the terminal can be set in test mode from the PST. The functionality of the event reporting during test mode is set from the PST as follows:

- Use event masks
- Report no events
- Report all events

In Test Mode, individually event blocks can be blocked from the PST.

Individually event blocks can also be blocked from the local HMI under the menu:

Test/TestMode/BlockEventFunc

7 Event recorder

During testing, the event recorder can be switched off if desired. This is found in the SMS or Substation Control System (SCS).

8 Instantaneous overcurrent protection (IOC)

Prepare the terminal for verification of settings as outlined in section “Preparing for test” in this chapter.

To verify the settings the following fault type should be tested:

- One for a phase-to-earth fault

Ensure that the maximum continuous current of the terminal does not exceed four times its rated value.

8.1 Measuring the operate limit of set values

8.1.1 Phase overcurrent protection

Procedure

1. **Inject a phase current in the terminal with start below the setting value.**
2. **Increase the injected current in the L*n* phase until the IOC--TRL*n* (*n*=1-3) signal appears.**
3. **Switch off the fault current.**

   Observe the maximum permitted overloading of the current circuits in the terminal.

4. **Compare the measured operating current with the set value.**

8.1.2 Residual overcurrent protection (non-dir.)

Procedure

1. **Inject a phase current in the terminal with start below the setting value.**
2. **Increase the injected current in the L*n* phase until the IOC--TRN signal appears.**
3. **Switch off the fault current.**

   Observe the maximum permitted overloading of the current circuits in the terminal.

4. **Compare the measured operating current with the set value.**

8.2 Completing the test

Continue to test another function or complete the test by setting the test mode to off.

9 Line differential protection (DIFL)

When testing the differential protection it is important to be aware of that actions taken locally may cause operation of the terminal in the remote end.

At commissioning and after changes in the current circuits, the trip signals at **both** terminals must be blocked permanently **before** the dc supply is connected. This precaution is taken to avoid unwanted local and remote trip in case of error in the current circuits. The blocking can **not** be done by the COMBITEST test switch. It has to be made on the station side of the test switch because the test switch disconnects the current inputs to the terminal and thus causes current unbalance in the differential circuit. This will cause the remote end terminal to trip if not blocked. The blocking of the trip signal must be maintained, until the test has been performed at both terminals.

Any work in any of the terminals, such as injecting current or to short-circuit the current during load transfer on the line, will result in a local and **REMOTE** end trip.

When the current balance is disturbed by any action, the protections at both line ends must be blocked.

Before performing any work in the current circuit to the line differential protection, the *TestMode* must be activated and saved. The protection will **not** enter into test mode without saving the command.

When the protection is equipped with a COMBITEST test switch, inserting the test handle will automatically force the protection into test mode. This function is also achieved by activating the *Test* digital input. The test mode command must be saved to be activated.

It is sufficient if one of the terminals is set in test mode. The trip function is blocked automatically at both line ends, when one of the protection terminals is in test mode. Thus the protection can be tested without any manual actions in the remote station.

Testing can be performed only when the terminals communicate with each other and if **one and one only** of the terminals is in test mode.

To activate the local trip relays during the test for operating time measurement, the blocking of the trip is overridden in the terminal in test mode by the command “Local trip”.

For a complete test of the protection, the tests must be repeated at both terminals.

When one of the protections is in test mode, the opposite terminal mode of operation is changed. In the opposite terminal, the received current values (a and b Fourier coefficients) are echoed back to the other terminal, but transposed in the following way: the received value for the L1 phase is returned as the L2 current, L2 is returned as L3, and L3 as L1.

Note!

When a current is injected into phase L1 in the terminal, it will appear as an IDiff in phase L1 and L2 with 50% of the value as an IBias and in phase L3 with 25% of the value as an IBias. When the current is sufficiently high, the protection will operate in phase L1 and L2 in the terminal in test mode, but it will not operate in the remote terminal. For the actual reading of IDiff and IBias, see step 6 in the test procedure. Also see figure 16 and equations 5, 6 and 7.

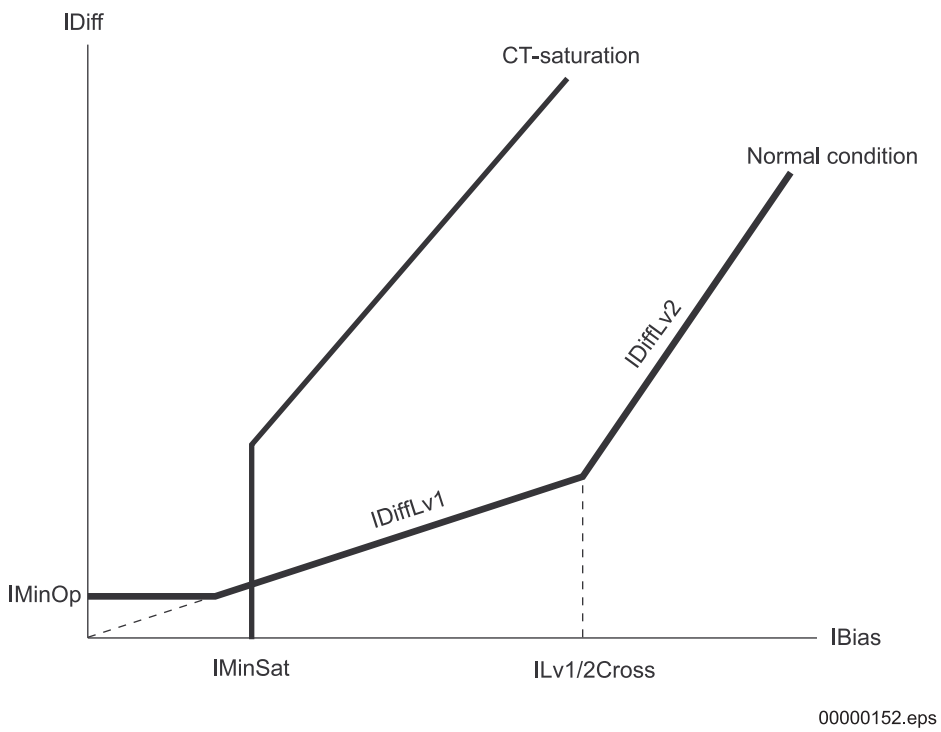

Figure 16: Stabilisation characteristic

$$I_{Diff} = \left|\overline{I_{Local}} + \overline{I_{Remote}}\right|$$

(Equation 5)

$$I_{Bias} = \frac{\left|\overline{I_{Local}}\right| + \left|\overline{I_{Remote}}\right|}{2}$$

(Equation 6)

$$(I_{Bias})_{Evaluate} = \text{Max}\ \{[(I_{Bias})_{Own\ phase}]\ \text{OR}\ [0.5 \cdot (I_{Bias})_{Other\ phases}]\}$$

(Equation 7)

The test is performed by injecting a single and a symmetrical three-phase current. If the optional charging current compensation function is included, the CCComp shall be Off and no measuring voltage connected to the terminal.

9.1 Testing the line differential protection

Procedure

1. **Block the trip signal.**

   The blocking can **not** be done by the COMBITEST test switch. It has to be made on the station side of the test switch.

2. **Set the protection in test mode from the HMI unit.**

   The TestMode is found in the menu under:

   Test/TestMode/Operation

   The *TestMode* command must be saved in order to be activated. When the protection is equipped with COMBITEST test switch, the test mode is automatically activated but not saved when the test handle is inserted.

3. **Prepare the terminal for verification of settings as outlined in section “Prepare for test” in this chapter.**

4. **Set the Disturbance report to Off.**

   This command is found in the menu under:

Test/TestMode/DisturbReport

5. **Activate the trip by setting Release local.**

   This command is found in the menu under:

   Test/TestMode/Differential

   This command must be saved in order to be activated. Observe that the command *ReleaseLocal* will allow the trip outputs to be activated during the tests.

6. **Inject a current in L1 and increase the current until operation in phase L1 and L2 takes place.**

   The injected operation value must correspond to the set IMinOp·Ir·CTFactor. This value is to be read as IDiffL1 and IDiffL2, and 50% of IDiffL1 as IBiasL1 and IBiasL2. The IDiffL3 should be zero and IBiasL3 25% of IDiffL1. These values are read on the HMI under:

   Service Report/Functions/Differential/Diff Values

7. **Repeat step 6 for phase L2 and L3.**

   The result shall be transposed one, respectively two steps.

8. **Inject a symmetrical three-phase current, and increase the current until operation is achieved in all three phases.**

   The IMinOp·Ir·CTFactor value shall be obtained for operation and read for I_{Diff} in all three phases. 100% of I_{Diff} shall be read for I_{Bias} in all three phases.

9. **Read the transmission delay on the HMI.**

   This command is found in the menu under:

   Service value/Functions/Differential/DiffCom/ComInfo

   This delay is not allowed to exceed 12 ms.

10. **Measure the operating time by injection of a single-phase current in phase L1.**

    The injected current should be 4 times the operating current. The time measurement is stopped by the trip output from the protection. The operating time should be 28-33 ms + 2 times the communication transmission delay.

11. **Disconnect the test equipment and reconnect the current transformer.**
12. **Read and check the service values of the three-phase current.**
13. **When the current transformers are connected, put the protection in operation by switching off the test mode.**

    After the test mode is set to *Off*, the command must be saved to activate the protection. The yellow LED shall stop flashing.

14. **With a through load current of minimum 20% of the *Ir · CTFactor*, the I_{Diff} and I_{Bias} are read in all phases.**

    The I_{Diff} should be lower than 10% of the actual secondary current divided by the CTFactor, the I_{Bias} should be equal to this current. This measurement is necessary at commissioning to guarantee that there is no phase shift between the terminals.

15. **Remove the external blocking of the trip signal when this test has been successfully performed.**
16. **A complete commissioning or maintenance test requires that the test is repeated at both terminals.**
17. **When the direct transfer trip is used, this function has to be tested by activating its input, to check that trip is achieved at the remote terminal. During this test, the trip circuit has to be blocked.**

9.2 Testing the charging current compensation

Procedure

1. **When the tests of the differential function have been performed, set the *CCComp = On* and check that the settings for *XC1, XC0* and *IMinOpComp* are correct.**
2. **Check that all currents are disconnected from the terminal and connect symmetrical three-phase voltages to the corresponding voltage input.**
3. **Disconnect the voltages from the terminal and connect only one phase to all three voltage inputs of the terminal.**

4. **Increase the three-phase voltage to its nominal value.**

   Read the values of the differential and bias currents under the menu:

   ServiceReport/DiffValues

   They must correspond to the value:

$$IDiffL1 = IDiffL2 = IDiffL3 = \frac{U}{XC1 \cdot CTFactor}$$

I_{Bias}	I_{Diff} for each phase.
U	Represents measured phase voltage.

   The bias currents are available under the same menu. They must be equal to the measured differential current in each phase.

5. **Increase the measured voltage to the rated phase value and observe the values of the differential and bias currents, presented on the terminal.**

   They must correspond to the following values:

$$IDiffL1 = IDiffL2 = IDiffL3 = \frac{2 \cdot U}{XC0 \cdot CTFactor}$$

(Equation 8)

$$IBiasL1 = IBiasL2 = IBiasL3 = \frac{U}{XC0 \cdot CTFactor}$$

(Equation 9)

6. **With the terminal in normal operation, not in Test mode, and with the line energised, the I_{DiffL1}, I_{DiffL2} and I_{DiffL3} are measured under the service report menu with *CCComp* temporary set to *Off* at both terminals. Thereafter measure the values with the *CCComp* set to *On.***

   Note! Setting CCComp to Off might cause the terminal to trip. Therefore make sure that the trip outputs are blocked.

7. **Check the charging current compensation by comparing the measured I_{DiffLx} values.**

   The measured I_{DiffLx} shall be near zero in each separate phase with the CCC used.

8. **Remove the external blocking of the trip signal when this test has been successfully performed.**

9.3 Completing the test

Continue to test another function or complete the test by setting the test mode to off.

10 Monitoring of AC analogue measurements

Stabilized ac current and voltage generators and corresponding current, voltage, power and frequency meters with very high accuracy are necessary for testing the alternating quantity measuring function. The operating ranges of the generators must correspond to the rated alternate current and voltage of each terminal.

Prepare the terminal for verification of settings as outlined in section “Preparing for test” in this chapter. Connect the generators and instruments to the corresponding input terminals of a unit under test.

Procedure

1. **Supply the terminal with voltages and currents.**

   Check that the values presented on the HMI unit correspond to the magnitude of input measured quantities within the limits of declared accuracy. The mean service values are available under the submenu:

   Service Report/ServiceValues

   The phasors of up to five input currents and voltages are available under the submenu:

   Service Report/Phasors/Primary

2. **Check the operation of ADBS or IDBS when applicable. Compare with the expected values.**

   The operation of ADBS or IDBS function can be checked separately with the RepInt = 0 setting. The value on the HMI follows the changes in the input measuring quantity continuously.

3. **Check the set operate levels of the monitoring function by changing the magnitude of input quantities and observing the operation of the corresponding output relays.**

   The output contact changes its state when the changes in the input measuring quantity are higher than the set values HIWARN, HIALARM, or lower than the set values LOWWARN, LOWALARM.

4. **Continue to test another function or complete the test by setting the test mode to off.**

11 Monitoring of DC analogue measurements

A stabilized direct current generator and mA meter with very high accuracy for measurement of direct current is needed in order to test the dc measuring module. The generator operating range and the measuring range of the mA meter must be at least between -25 and 25 mA.

Prepare the terminal for verification of settings as outlined in section “Preparing for test” in this chapter. Connect the current generator and mA meter to the direct current input channels to be tested.

Procedure

1. **Consider the need to block output signals.**
2. **Check that the values presented on the HMI module corresponds to the magnitude of input direct current within the limits of declared accuracy.**

   The service value is available under the submenu:

   Service Report/I/O/Slotnm-MIMx/MIxy-Value

where:

nm represents the serial number of a slot with tested mA input module

x represents the serial number of a mA input module in a terminal

y represents the serial number of a measuring channel on module x.

3. **Check the operation of ADBS or IDBS function when applicable. Compare with the expected values.**

   The operation of ADBS or IDBS function can be checked separately with the setting of RepInt = 0. The value on the HMI must change only when the changes in input current (compared to the present value) are higher than the set value for the selected dead band.

4. **Check the operating monitoring levels by changing the magnitude of input current and observing the operation of the corresponding output relays.**

   The output contact changes its state when the changes in the input measuring quantity are higher than the set values RMAXAL, HIWARN, HIALARM, or lower than the set values LOWWARN, LOWALARM, RMINAL.

5. **Continue to test another function or complete the test by setting the test mode to off.**

12 Setting lockout (HMI)

1. **Configure the HMI--BLOCKSET functional input to the binary input, which is determined by the engineering or the input that is not used by any other function.**
2. **Set the setting restriction to SettingRestrict = Block.**
3. **Connect rated DC voltage to the selected binary input.**
4. **Try to change the setting of any parameter for one of the functions.**

   Reading of the values must be possible.

   The terminal must not respond to any attempt to change the setting value or configuration.

5. **Disconnect the control DC voltage from the selected binary input.**
6. **Repeat the attempt under step 4.**

   The terminal must accept the changed setting value or configuration.

7. **Depending on the requested design for a complete REx 5xx terminal, leave the function active or reconfigure the function into the default configuration and set the setting restriction function out of operation to SettingRestrict = Open.**
8. **Continue to test another function or complete the test by setting the test mode to off.**

13 Setting group selector (GRP)

Procedure

1. **Check the configuration of binary inputs that control the selection of active setting group.**
2. **Browse the 'ActiveGroup' menu to achieve information about the active setting group.**

   The ActiveGroup menu is located in the local HMI under:

   ServiceReport/ActiveGroup

3. **Connect the appropriate dc voltage to the corresponding binary input of the terminal and observe the information presented on the HMI display.**

   The displayed information must always correspond to the activated input.

4. **Check that corresponding output indicates the active group.**
5. **Continue to test another function or complete the test by setting the test mode to off.**

14 Thermal overload protection (THOL)

Prepare the terminal for verification of settings as outlined in section “Preparing for test” in this chapter.

Check that the input logical signal THOL-BLOCK is logical zero and note on the local HMI that the logical signal THOL-TRIP, THOL-START and THOL-ALARM are equal to the logical 0. Logical signals for thermal overload protection are available under menu tree:

ServiceReport/Functions/ThermOverLoad/FuncOutputs

14.1 Measuring the operate and time limit of set values

14.1.1 Testing the protection without external temperature compensation (NonComp)

Procedure

1. **Quickly set the measured current (fault current) in one phase to about 300% of I1b (to minimise the trip time), and switch off the current with the switch.**
2. **Reset the thermal memory under menu tree:**

   Test/ThermReset

3. **Switch on the fault current and read the presented temperature:**

   ServiceReport/Functions/ThermOverload/ThermOverload/T Line

4. **Check the Alarm limit (TAlarm) during injection.**

   Measure the signal THOL-ALARM until it appears on the corresponding binary output or on the local HMI unit.

5. **Compare the measured temperature with the setting.**
6. **Measure the trip time of the THOL protection.**

   Use the THOL-TRIP signal from the configured binary output to stop the timer.

7. **Take the “T Line” readings.**

   Compare with the setting of TTrip.

8. **Activate the THOL-BLOCK binary input.**

   The signals THOL-ALARM, THOL-START and THOL-TRIP should disappear.

9. **Reset the THOL-BLOCK binary input.**
10. **Check the reset limit (TdReset).**

    Measure the signal THOL-START until it disappears on the corresponding binary output or on the local HMI unit, take the “T Line” readings and compare with the setting of TdReset.

11. **Compare the measured trip time with the setting according to the formula.**
12. **Reset the thermal memory.**
13. **Continue to test another function or complete the test by setting the test mode to off.**

15 Time delayed overcurrent protection (TOC)

Prepare the terminal for verification of settings as outlined in section “Preparing for test” in this chapter.

To verify the settings the following fault type should be tested:

- One for a phase-to-earth fault

Ensure that the maximum continuous current of the terminal does not exceed four times its rated value.

15.1 Measuring the operate limit of set values

15.1.1 Time delayed phase overcurrent

Procedure

1. **Inject a phase current in the terminal with start below the setting value.**
2. **Increase the injected current (measured current) in the L*n* phase until the starting signal TOC--STL*n* (*n*=1-3) appears.**
3. **Switch off the fault current.**

   Observe the maximum permitted overloading of the current circuits in the terminal.

4. **Compare the measured operating current with the set value IP>.**
5. **Set the fault current to about 1.5 times the measured operating current.**
6. **Switch on the fault current and measure the operating time of the TOC protection. Use the TOC--TRP signal.**
7. **Compare the measured time with the set value tP.**

15.1.2 Time delayed residual overcurrent (non-dir.)

Procedure

1. **Inject a phase current in the terminal with start below the setting value.**
2. **Increase the injected residual current (measured current) in the L*n* phase until the starting signal TOC--STN appears.**

3. **Switch off the fault current.**

   Observe the maximum permitted overloading of the current circuits in the terminal.

4. **Compare the measured operating current with the set value IN>.**
5. **Set the fault current to about 1.5 times the measured operating current.**
6. **Switch on the fault current and measure the operating time of the TOC protection. Use the TOC--TRN signal.**
7. **Compare the measured time with the set value tN.**

15.2 Completing the test

Continue to test another function or complete the test by setting the test mode to off.

16 Trip logic (TR)

Prepare the terminal for verification of settings as outlined in section “Preparing for test” in this chapter.

The function is tested functionally together with other protection functions (distance protection ZMn--, line differential protection DIFL-, earth-fault overcurrent protection IOC-- or TOC--, etc.) within the REx 5xx terminals. It is recommended to test the function together with the autoreclosing function, when built into the terminal or when a separate external unit is used for the reclosing purposes.

16.1 3ph operating mode

The function must issue a three-phase trip in all cases, when trip is initiated by any protection or some other built-in or external function. The following functional output signals must always appear simultaneously: TRIP-TRIP, TRIP-TRL1, TRIP-TRL2, TRIP-TRL3 and TRIP-TR3P.

16.2 1ph/3ph operating mode

The following tests should be carried out in addition to some other tests, which depends on the complete configuration of a terminal:

Procedure

1. **Initiate one-by one different single-phase-to-earth faults.**

   Consider sufficient time interval between the faults, to overcome a reclaim time of eventually activated autoreclosing function. Only a single-phase trip should occur for each separate fault and only one of the trip outputs (TRIP-TRLn) should be activated at a time. Functional outputs TRIP-TRIP and TRIP-TR1P should be active at each fault. No other outputs should be active.

2. **Initiate different phase-to-phase and three-phase faults.**

   Consider sufficient time interval between the faults, to overcome a reclaim time of eventually activated autoreclosing function. Only a three-phase trip should occur for each separate fault and all of the trip outputs (TRIP-TRLn) should be activated at a time. Functional outputs TRIP-TRIP and TRIP-TR3P should be active at each fault. No other outputs should be active.

3. **Initiate a single-phase-to-earth fault and switch it off immediately when the trip signal is issued for the corresponding phase. Initiate the same fault once again within the reclaim time of the used autoreclosing function.**

   A three-phase trip must be initiated for the second fault.

   Check that the corresponding trip signals appear after both faults.

   If not the autoreclosing function is used the functional outputs TRIP-TRIP, TRIP-TR1P and the corresponding phase signal (TRIP-TRLn) should be active at each fault.

4. **Initiate a single-phase-to-earth fault and switch it off immediately when the trip signal is issued for the corresponding phase. Initiate the second single-phase-to-earth fault in one of the remaining phases within the time interval, shorter than two seconds and shorter than the dead-time of the autoreclosing function, when included in protection scheme.**

   Check that the second trip is a three-phase trip.

16.3 1ph/2ph/3ph operating mode

The following tests should be carried out in addition to some other tests, which depends on the complete configuration of a terminal:

Procedure

1. **Initiate one-by one different single-phase-to-earth faults.**

   Consider sufficient time interval between the faults, to overcome a reclaim time of eventually activated autoreclosing function. Only a single-phase trip should occur for each separate fault and only one of the trip outputs (TRIP-TRLn) should be activated at a time. Functional outputs TRIP-TRIP and TRIP-TR1P should be active at each fault. No other outputs should be active.

2. **Initiate one-by one different phase-to-phase faults.**

   Consider sufficient time interval between the faults, to overcome a reclaim time of eventually activated autoreclosing function. Only a two-phase trip should occur for each separate fault and only corresponding two trip outputs (TRIP-TRLn) should be activated at a time. Functional outputs TRIP-TRIP and TRIP-TR2P should be active at each fault. No other outputs should be active.

3. **Initiate a three-phase fault.**

   Consider sufficient time interval between the faults, to overcome a reclaim time of eventually activated autoreclosing function. Only a three-phase trip should occur for the fault and all trip outputs (TRIP-TRLn) should be activated at the same time. Functional outputs TRIP-TRIP and TRIP-TR3P should be active at each fault. No other outputs should be active.

4. **Initiate a single-phase-to-earth fault and switch it off immediately when the trip signal is issued for the corresponding phase. Initiate the same fault once again within the reclaim time of the used autoreclosing function.**

   A three-phase trip must be initiated for the second fault.

   Check that the corresponding trip signals appear after both faults.

   If not the autoreclosing function is used the functional outputs TRIP-TRIP, TRIP-TR1P and the corresponding phase signal (TRIP-TRLn) should be active at each fault.

5. **Initiate a single-phase-to-earth fault and switch it off immediately when the trip signal is issued for the corresponding phase. Initiate the second single-phase-to-earth fault in one of the remaining phases within the time interval, shorter than two seconds and shorter than the dead-time of the autoreclosing function, when included in protection scheme.**

   Check that the second trip is a single-phase trip in a second initiated phase.

6. **Initiate a phase-to-phase fault and switch it off immediately when the trip signal is issued for the corresponding two phases. Initiate another phase-to-phase fault (not between the same phases) within the time, shorter than 2 seconds.**

   Check, that the output signals, issued for the first fault, correspond to two-phase trip for included phases.

   The output signals for the second fault must correspond to the three-phase tripping action.

16.4 Completing the test

Continue to test another function or complete the test by setting the test mode to off.

Chapter 12 Verifying the internal configuration

About this chapter

The aim of this chapter is to verify that the internal communications and output signals are according to the specification and normal protection praxis. This means that all included protection functions must be in operation.

1 Overview

Before start of this process, all individual devices that are involved in the fault clearance process must have been tested as individuals and set in operation. The breaker must be ready for an open-close-open cycle.

The shaping of the test process is dependent on the complexity of the design of the switchyard. Hereby follows some items which could be used as guidelines.

2 Testing the interaction of the distance protection

This procedure describes how to test the interaction of the distance protection zone 1 at phase L1-earth fault in forward direction. It is recommended that all other distance protection zones and other protection functions are tested in a similar way. The test must be done without the test switch in order to verify the interaction between the terminal and surrounding equipment. Make sure that all personnel is informed, also in remote station.

Procedure

1. **Make sure that the protection terminal and fitting breaker(s) to be tested are in service.**
2. **Connect the test equipment to the terminal.**
3. **Set the test equipment so that the impedance present to the relay is half the set value.**
4. **Energise the protection terminal and evaluate the result i.e.**
   - Check that correct trip has been accomplished according to configuration and philosophy.
   - Check that all binary output signals that should be activated have been activated.
   - Check that all other protection functions that should be activated by this type of fault have been activated.
   - Check that no other protection functions that should not be activated have not been activated.
   - Check whenever applicable that the disturbance report, event list and disturbance recorder have been activated at perform correct information.

Chapter 13 Testing the protection system

About this chapter

This chapter describes how to verify the conformity of the protection system without the protected object energised.

1 Overview

Before start of this process, all individual devices that are involved in the fault clearance process of the protected object must have been tested as individuals and set in operation. The breaker must be ready for an open-close-open cycle.

Scheme performance test is the final test that should be carried out before the protected object is taken into service.

Due to the complexity in combination with already performed tests, it is not necessary to test all protection functions and all fault types in this process. The most important protection functions in the terminal for single line to earth fault and phase-phase fault could be choose for the test.

The shaping of the test process is dependent on the complexity of the design of the switchyard. Hereby follows some items which could be used as guidelines.

2 Testing the interaction of the distance protection

This procedure describes how to test the interaction of distance protection zone 1 at a transient phase L1-L2 fault in forward direction. The test must be done without the test switch in order to verify the interaction between the terminal and surrounding equipment. Make sure that involved personnel is informed also in remote station.

Procedure

1. **Make sure that the protection terminal and fitting breaker(s) to be tested are in service.**
2. **Connect the test equipment to the terminal.**
3. **Set the test equipment so that the impedance present to the relay is half the set value of zone 1.**
4. **Prepare a transient fault sequence.**
5. **Simulate the condition for the synchro-check as for live bus and dead line.**
6. **Energise the protection terminal and evaluate the result i.e.**
   - Check that correct trip has been accomplished according to configuration and philosophy.
   - Check that the autoreclosure have made an reclosing of the protected object.
   - Check that activation of all other external devices have been accomplished according to configuration and protection philosophy.
     - Check, whenever applicable, that carrier receive signal has arrived at remote end.
     - Check, whenever applicable, that start of external disturbance recorder has been accomplished.
     - Check that event and alarm signals has been given etc.
   - Check that no abnormal events have occurred.
   - Notice the AR dead time and do corrections if needed.
7. **Make a new fault case for permanent fault and repeat the procedure 1 - 6 above.**

   Specially note that a permanent trip should occur after the last attempt according to the programming of the AR.

It is recommended to repeat the procedure 1 - 6 for a protection function which detects earth-faults i.e. residual overcurrent protection.