Contents Page

Introduction to functions 6–23

Introduction..... 6–23

Design 6–24

Current, phase wise 6–27
Instantaneous phase overcurrent protection.....6–27
Application..... 6–27
Theory of operation 6–27
Design 6–27
Setting instructions..... 6–29
Meshed network without parallel line 6–29
Meshed network with parallel line 6–31
Testing..... 6–33
Appendix 6–35
Function block 6–35
Function block diagram 6–35
Signal list..... 6–36
Setting table 6–36
Time delayed phase overcurrent protection 6–37
Application..... 6–37
Theory of operation 6–37
Design 6–37
Setting instructions..... 6–39
Setting of operating current IP> 6–39
Setting of time delay tP 6–40
Testing..... 6–40
Appendix 6–42
Function block 6–42
Function block diagram 6–42
Signal list..... 6–43
Setting table 6–43
Pole discordance protection.....6–45
Application..... 6–45
Theory of operation 6–45
Design 6–46
Pole discordance signalling from circuit breaker..... 6–47
Unsymmetrical load detection 6–47
Setting 6–48
Testing..... 6–48
General 6–48
Testing method 6–49
Appendix 6–50
Function block 6–50
Function block diagram 6–51
Signal list..... 6–51
Setting table 6–51
Breaker-failure protection 6–53
Application..... 6–53
Theory of operation 6–55
Input and output signals 6–56

Start functions 6–56
Measuring principles 6–57
Retrip functions 6–58
Back-up trip 6–59
Setting 6–59
Human-machine interface (HMI) 6–59
Testing 6–60
Test of the breaker-failure protection 6–60
Preparations 6–60
Check that the protection does not trip when set passive 6–61
Check that the protection can be started from all start inputs 6–61
Check that the retrip function works 6–61
Check that the back-up trip function works 6–62
Terminate the test and restore the equipment to normal state 6–62
Appendix 6–63
Function block 6–63
Signal list 6–64
Setting table 6–64

Current, residual 6–65

Instantaneous residual overcurrent protection (nondir).....6–65

Application..... 6–65

Theory of operation 6–65

Design 6–66

Setting 6–67

Meshed network without parallel line 6–67

Meshed network with parallel line 6–69

Testing..... 6–70

Appendix 6–73

Function block 6–73

Function block diagram 6–73

Signal list..... 6–73

Setting table 6–73

Time delayed residual overcurrent protection (nondir) 6–75

Application..... 6–75

Theory of operation 6–75

Design 6–75

Settings 6–77

Setting of operating current IN> 6–77

Setting of time delay tN 6–78

Testing..... 6–78

Appendix 6–80

Function block 6–80

Function block diagram 6–80

Signal list..... 6–81

Setting table 6–81

Residual overcurrent protection (dir and nondir).....6–83

Application..... 6–83

Earth-fault overcurrent protection..... 6–83

Directional comparison logic function..... 6–84

Theory of operation 6–85

Directional earth-fault overcurrent protection 6–85

Setting 6–88

Testing..... 6–91

Preparations..... 6–91

Tests 6–92

Directional comparison logic function..... 6–94

Appendix 6–95

Function block 6–95

Signal list..... 6–95

Setting table 6–95

Communication logic for residual overcurrent protection 6–97

Application..... 6–97

Theory of operation 6–97

Directional comparison logic function..... 6–97

Blocking scheme 6–98
Permissive overreach scheme 6–99
Setting 6–100
Blocking scheme 6–100
Permissive communication scheme 6–100
Testing 6–100
Directional earth-fault overcurrent protection 6–100
Directional comparison logic function 6–101
Blocking scheme 6–101
Permissive scheme 6–101
Appendix 6–102
Function block 6–102
Signal list 6–102
Setting table 6–102

Voltage 6–103

Time delayed undervoltage protection 6–103

Application 6–103

Measuring principle 6–103

Design 6–104

Undervoltage protection 6–104

Setting 6–104

Testing 6–105

Appendix 6–107

Function block 6–107

Signal list 6–107

Setting table 6–107

Time delayed overvoltage and residual overvoltage protection 6–109

Application 6–109

Measuring principles 6–110

Design 6–110

Setting 6–111

Time delayed overvoltage protection 6–111

Time delayed residual overvoltage protection 6–111

Testing 6–112

Time delayed overvoltage protection 6–112

Time delayed residual overvoltage protection 6–113

Appendix 6–115

Function block 6–115

Signal list 6–116

Setting table 6–116

Power system supervision 6–117

Loss of voltage check 6–117

Application 6–117

Theory of operation 6–117

Design 6–117

Setting instructions 6–119

Testing 6–119

Appendix 6–121

Function block 6–121

Function block diagram 6–122

Signal list 6–123

Setting table 6–123

Secondary system supervision 6–125

Fuse failure supervision (negative sequence) 6–125

Application 6–125

Theory of operation 6–125

Design 6–126

Setting instructions 6–128

Setting of negative sequence voltage 3U2> 6–128

Setting of negative sequence current 3I2< 6–129

Testing 6–129

Appendix 6–132

Function block 6–132

Function block diagram 6–133

Signal lists 6–134

Setting table 6–134

Fuse failure supervision (zero sequence) 6–135

Application 6–135

Theory of operation 6–135

Design 6–136

Setting instructions 6–138

Setting of zero sequence voltage 3U0> 6–139

Setting of zero sequence current 3I0< 6–139

Testing 6–140

Appendix 6–142

Function block 6–142

Function block diagram 6–143

Signal list 6–144

Setting table 6–144

Control, single and multiple bays 6–145
Apparatus control for single and multiple bays 6–145
Introduction..... 6–145
Application..... 6–146
General 6–146
Operator place 6–146
Station..... 6–148
Local 6–148
Automatic functions..... 6–148
Selection and reservation..... 6–148
Automatic functions..... 6–150
Manual updating of indications..... 6–150
Blockings..... 6–151
Command supervision 6–151
Supervision of operating apparatus 6–151
Synchrocheck with phasing..... 6–152
Design 6–153
General 6–153
Standard modules..... 6–154
BAYCON..... 6–157
Operator place choice 6–157
Reservation and selection..... 6–158
Information exchange..... 6–158
Selection relay supervision 6–159
Automatic operation check..... 6–162
Parameters..... 6–162
COMCON..... 6–162
Parameters..... 6–163
SWICON 6–163
Parameters..... 6–165
BLKCON 6–166
Communication between modules..... 6–167
Configurations 6–169
General 6–169
Connections to other functions..... 6–170
Reservation function 6–170
Example 6–175
Operator place selection 6–177
Station HMI 6–179
Remote control..... 6–182
Local panel (back-up panel)..... 6–182
Local HMI..... 6–183
Interlocking..... 6–184
Synchrocheck with phasing 6–184
Autoreclosing 6–188
Protections..... 6–189
Pole discordance protection..... 6–189
Automatic functions..... 6–190
Command output module..... 6–190
Setting 6–193
Testing..... 6–194

Appendix 6–195
Function blocks 6–195
BAYCONA 6–195
BAYCONB 6–196
BAYCONC 6–197
BAYCOND 6–198
BAYCONE 6–199
BAYCONF 6–200
COMCON 6–201
SWICONA 6–202
SWICONB 6–203
SWICONC 6–204
BLKCONK 6–204
BLKCONL 6–205
Signal lists 6–205
Setting tables 6–226

Interlocking 6–229

Introduction 6–229
Application 6–230
Design 6–233
General 6–233
Standard modules 6–233
Line for double and transfer busbars, ABC_LINE 6–235
Bus coupler for double and transfer busbars, ABC_BC 6–235
Transformer bay for double busbars, AB_TRAFO 6–235
Bus-section breaker for double busbars, A1A2_BS 6–236
Bus-section disconnector for double busbars, A1A2_DC 6–237
Busbar earthing switch, BB_ES 6–237
Double CB bay, DB_BUS_A, DB_LINE, DB_BUS_B 6–238
1½-CB diameter, BH_LINE_A, BH_CONN, BH_LINE_B 6–239
Communication between modules 6–239
Configurations 6–240
General 6–240
Project-specific logic 6–240
Single breaker arrangement, line bay 6–240
Signals from bypass busbar 6–240
Signals from bus coupler 6–241
Parameter setting 6–245
Single breaker arrangement, bus-coupler bay 6–246
Signals from all feeders 6–246
Signals from bus coupler 6–248
Parameter setting 6–250
Single breaker arrangement, transformer bay 6–251
Signals from bus coupler 6–251
Parameter setting 6–252
Double-breaker arrangement 6–252
Parameter setting 6–252
Breaker and a half arrangement 6–253
Parameter setting 6–253
Bus-section breaker 6–254
Signals from all feeders 6–254
Parameter setting 6–258

Bus-section disconnector 6–258
Signals in single breaker arrangement 6–258
Signals in double-breaker arrangement 6–262
Signals in breaker and a half arrangement 6–265
Bus earthing switch 6–266
Signals in single breaker arrangement 6–266
Signals in double-breaker arrangement 6–271
Signals in breaker and a half arrangement 6–272
Testing 6–274
Appendix 6–275
Function blocks and function block diagrams 6–275
ABC_LINE 6–275
ABC_BC 6–282
AB_TRAFO 6–288
A1A2_BS 6–293
A1A2_DC 6–296
BB_ES 6–299
DB_BUS_A 6–299
DB_BUS_B 6–305
BH_LINE_A 6–308
BH_CONN 6–312
BH_LINE_B 6–314
Signal lists 6–318
Command control 6–335
Application 6–335
Design 6–335
Configuration 6–337
Commands 6–337
Setting 6–338
Testing 6–338
Appendix 6–339
Function block 6–339
Signal list 6–339
Setting table 6–339
Synchro- and energising check for single circuit breaker 6–341
Application 6–341
Synchrocheck 6–341
Energising check 6–343
Voltage selection 6–344
Voltage selection for a single busbar 6–345
Fuse failure and Voltage OK signals 6–346
Voltage selection for a double bus 6–348
Fuse failure and Voltage OK signals 6–348
Theory of operation 6–349
Synchrocheck 6–349
Voltage selection 6–351
Setting 6–354
Operation 6–354
Input phase 6–354
UMeasure 6–354

PhaseShift 6–354
URatio 6–354
USelection 6–354
AutoEnerg and ManEnerg 6–355
ManDBDL 6–355
Testing 6–356
Test equipment 6–356
Synchro-check tests 6–356
Test of voltage difference 6–356
Test of phase difference 6–358
Test of frequency difference 6–359
Test of reference voltage 6–360
Test of energising check 6–360
Test of dead line live bus (DLLB) 6–360
Dead bus live line (DBLL) 6–361
Energising in both directions (DLLB or DBLL) 6–362
Dead bus Dead line (DBDL) 6–362
Test of voltage selection 6–362
Appendix 6–365
Function block 6–365
Signal list 6–365
Setting table 6–366

Synchro- and energising check for double circuit breakers 6–367

Application 6–367
Synchrocheck 6–367
Energising check 6–369
Voltage connection 6–370
Fuse failure and Voltage OK signals 6–371
Theory of operation 6–372
Synchro-check 6–372
Setting 6–375
Operation 6–375
Input phase 6–375
UMeasure 6–375
PhaseShift 6–375
URatio 6–375
AutoEnerg and ManEnerg 6–376
ManDBDL 6–376
Testing 6–377
Test equipment 6–377
Synchrocheck tests 6–378
Test of voltage difference 6–378
Test of phase difference 6–379
Test of frequency difference 6–381
Test of reference voltage 6–381
Test of energising check 6–381
Test of dead line live bus (DLLB) 6–381
Dead bus live line (DBLL) 6–382
Energising in both directions (DLLB or DBLL) 6–383
Dead bus Dead line (DBDL) 6–383
Appendix 6–384

Function block 6–384
Signal list 6–384
Setting table 6–384

Synchro- and energising check 1 1/2 CB arrangement 6–385

Application 6–385
Synchrocheck 6–385
Energising check 6–385
Voltage connection 6–386

Theory of operation 6–387
Synchrocheck 6–388
Energising check 6–388
Voltage connection 6–388
Fuse failure and Voltage OK signals 6–389
Function block and logics 6–390

Setting 6–395
Operation 6–395
Input phase 6–395
UMeasure 6–395
PhaseShift 6–395
URatio 6–395
AutoEnerg and ManEnerg 6–396
ManDBDL 6–396

Testing 6–397
Test equipment 6–397
Synchrocheck tests 6–397
Test of voltage difference 6–397
Test of phase difference 6–399
Test of frequency difference 6–401
Test of reference voltage 6–401
Test of energising check 6–401
Dead-line-live-bus (DLLB) 6–401
Dead-bus-live-line (DBLL) 6–402
Energising in both directions (DLLB or DBLL) 6–403
Dead-bus-dead-line (DBDL) 6–403

Appendix 6–404
Function block 6–404
Signal list 6–405
Setting table 6–406

Phasing, synchro- and energising check, single CB 6–407

Application 6–407
Phasing 6–407
Synchrocheck 6–408
Energising check 6–410
Voltage selection 6–411
Voltage selection for a single busbar 6–411
Voltage selection for a double bus 6–412
Fuse failure and Voltage OK signals 6–413

Theory of operation 6–414
In- and output signals 6–414

Setting 6–421

Operation 6–421
Input phase 6–421
PhaseShift 6–421
URatio 6–421
USelection 6–421
AutoEnerg and ManEnerg 6–421
ManDBDL 6–422
OperationSynch 6–422
ShortPulse 6–422
Testing 6–423
Test equipment 6–423
Phasing tests 6–424
Test of frequency difference 6–425
Synchrocheck tests 6–425
Test of voltage difference 6–425
Test of phase difference 6–426
Test of frequency difference 6–429
Test of reference voltage 6–429
Test of energising check 6–429
Test of dead line live bus (DLLB) 6–429
Dead bus live line (DBLL) 6–431
Energising in both directions (DLLB or DBLL) 6–431
Dead bus Dead line (DBDL) 6–431
Test of voltage selection 6–432
Appendix 6–434
Function block 6–434
Signal list 6–434
Setting table 6–435

Phasing, synchro- and energising check, double CBs 6–437

Application 6–437
Phasing 6–437
Synchrocheck 6–438
Energising check 6–441
Voltage connection 6–442
Fuse failure and Voltage OK signals 6–443
Theory of operation 6–444
Input and output signals 6–444
Setting 6–449
Operation 6–449
Input phase 6–449
PhaseShift 6–449
URatio 6–449
AutoEnerg and ManEnerg 6–449
ManDBDL 6–450
OperationSynch 6–450
ShortPulse 6–450
Testing 6–451
Test equipment 6–451
Phasing tests 6–452
Test of frequency difference 6–453
Synchrocheck tests 6–453

Test of voltage difference 6–453
Test of phase difference 6–454
Test of frequency difference 6–457
Test of reference voltage 6–457
Test of energising check 6–457
Test of dead line live bus (DLLB) 6–457
Dead bus live line (DBLL) 6–459
Energising in both directions (DLLB or DBLL) 6–459
Dead bus Dead line (DBDL) 6–459
Appendix 6–461
Function block 6–461
Signal list 6–461
Setting table 6–462
Autorecloser, single, two and/or three phase 6–463
Application 6–463
Theory of operation 6–465
Input and output signals, single breaker arrangement 6–465
Multi-breaker arrangement 6–467
AR Operation 6–468
Design 6–469
Start and control of the auto-reclosing 6–469
Extended AR open time, shot 1 6–469
Long trip signal 6–469
Reclosing programs 6–469
1/2/3ph reclosing 6–470
Evolving fault 6–471
AR01-P3P, Prepare three-phase trip 6–471
Blocking of a new reclosing cycle 6–471
Reclosing checks and Reclaim timer 6–471
Pulsing of CB closing command 6–472
Transient fault 6–472
Unsuccessful signal 6–472
Permanent fault 6–472
Automatic confirmation of programmed reclosing attempts 6–473
More about reclosing programs 6–473
Configuration and setting 6–476
Recommendations for input signals 6–476
Recommendations for output signals 6–477
Recommendations for multi-breaker arrangement 6–478
Testing 6–479
Suggested testing procedure 6–480
Preparations 6–480
Check the AR functionality 6–480
Check the reclosing requirements 6–481
Test of Master-Slave 6–481
Termination of the test 6–482
Appendix 6–483
Function block 6–483
Function block diagrams 6–484
Sequence examples 6–488
Signal list 6–490

Setting table 6–491

Autorecloser, three phase.....6–493

Application..... 6–493

Theory of operation 6–495

Input and output signals,
single breaker arrangement 6–495

Multi-breaker arrangement..... 6–497

AR Operation 6–498

Design 6–499

Start and control of the auto-reclosing 6–499

Extended AR open time, shot 1 6–499

Long trip signal..... 6–499

Reclosing program 6–499

Blocking of a new reclosing cycle 6–500

Reclosing checks and Reclaim timer 6–500

Pulsing of CB closing command 6–500

Transient fault 6–501

Unsuccessful signal 6–501

Permanent fault..... 6–501

Automatic confirmation of programmed reclosing attempts 6–501

Configuration and setting 6–502

Recommendations for input signals 6–502

Recommendations for output signals..... 6–503

Recommendations for multi-breaker arrangement..... 6–503

Testing..... 6–504

Suggested testing procedure 6–505

Preparations..... 6–505

Check the AR functionality..... 6–505

Check the reclosing requirements 6–506

Test of Master-Slave..... 6–506

Termination of the test 6–507

Appendix 6–508

Function block 6–508

Function block diagrams 6–509

Sequence examples..... 6–513

Signal list..... 6–514

Setting table 6–515

Logic 6–517
Single or two pole trip logic 6–517
Application 6–517
Design 6–517
Three-phase front logic 6–517
Phase segregated front logic 6–518
Additional logic for 1ph/3ph operating mode 6–519
Additional logic for 1ph/2ph/3ph operating mode 6–520
Final tripping circuits 6–521
Testing 6–522
3ph operating mode 6–522
1ph/3ph operating mode 6–522
1ph/2ph/3ph operating mode 6–523
Appendix 6–524
Function block 6–524
Signal list 6–524
Setting table 6–525
Serial communication 6–527
Application 6–527
Theory of operation 6–528
SPA operation 6–528
LON operation 6–528
IEC 870-5-103 operation 6–528
Design 6–529
SPA design 6–529
LON design 6–529
IEC 870-5-103 design 6–530
General 6–530
Hardware 6–530
Events 6–530
Measurands 6–530
Fault location 6–531
Commands 6–531
File transfer 6–531
Setting 6–532
SPA setting 6–532
LON setting 6–533
IEC 870-5-103 setting 6–534
Settings from the local HMI 6–534
Settings from the CAP 531 tool 6–536
Event 6–536
Commands 6–536
File transfer 6–537
Appendix 6–538
Function block 6–538
Signal list 6–538
Setting table 6–539
Command function 6–541
Application 6–541

Design 6–542
General 6–542
Binary signal interbay communication..... 6–542
Configuration 6–543
Setting 6–543
Testing..... 6–543
Appendix 6–544
Function block 6–544
Signal list..... 6–544
Setting table 6–544
Event function 6–545
Application..... 6–545
Theory of operation 6–545
Design 6–545
General 6–545
Double indication..... 6–546
Communication between terminals 6–546
Setting 6–547
Testing..... 6–548
Appendix 6–549
Function blocks 6–549
Signal list..... 6–551
Setting table 6–552

Monitoring **6–557**

Disturbance report - Introduction **6–557**

General overview 6–557
General disturbance information 6–558
Indications 6–558
Event recorder 6–558
Fault locator 6–558
Trip values 6–558
Disturbance recorder 6–559

Recording times 6–560

Analogue signals 6–561

Binary signals 6–561
Trig signals 6–562
Manual trig 6–562
Binary trig 6–562
Analogue trig 6–562

Disturbance report - Settings **6–563**

Introduction 6–563
Settings during normal conditions 6–564

Operation 6–564
Sequence number 6–565
Recording times 6–565
Binary signals 6–565
Analogue signals 6–566

Settings during test 6–567
Test mode 6–567
Activation of manual triggering 6–567

Appendix 6–568
Function block 6–568
Signal list 6–569
Setting table 6–570

Disturbance report - Indications **6–573**

Application 6–573

Theory of operation 6–573

Setting 6–574

Testing 6–574

Disturbance report - Disturbance recorder **6–575**

Application 6–575
Recording capacity 6–575
Memory capacity 6–575
Recording times 6–575
Triggers 6–575
Time tagging 6–576

Theory of operation 6–576

Design 6–578

Setting 6–580

Testing 6–580

Disturbance report - Event recorder 6–583
Application 6–583
Theory of operation 6–583
Setting 6–583
Testing 6–584
Disturbance Report - Trip value recorder 6–585
Application 6–585
Design 6–585
Displaying pre-fault and fault phasors of the currents and voltages 6–586
Setting of the user-defined names for phasors 6–586
Appendix 6–587
Monitoring of AC analogue measurements 6–589
Application 6–589
User-defined measuring ranges 6–590
Continuous monitoring of the measured quantity 6–590
Continuous supervision of the measured quantity 6–591
Amplitude dead-band supervision 6–591
Integrating dead-band supervision 6–592
Periodic reporting 6–592
Periodic reporting with parallel dead-band supervision 6–593
Periodic reporting with serial dead-band supervision 6–593
Combination of periodic reportings 6–594
Theory of operation and Design 6–595
Setting instructions 6–596
Testing 6–600
Appendix 6–600
Function block 6–600
Signal list 6–601
Setting table 6–601
Monitoring of DC analogue measurements 6–607
Application 6–607
User-defined measuring ranges 6–607
Continuous monitoring of the measured quantity 6–608
Continuous supervision of the measured quantity 6–609
Amplitude dead-band supervision 6–609
Integrating dead-band supervision 6–610
Periodic reporting 6–611
Periodic reporting with parallel dead-band supervision 6–611
Periodic reporting with serial dead-band supervision 6–612
Combination of periodic reportings 6–613
Theory of operation and Design 6–614
Setting instructions 6–615
Testing 6–618
Appendix 6–619
Function blocks 6–619
Signal list 6–620
Setting table 6–621

Metering 6–627

Pulse counter 6–627

Application..... 6–627

Theory of operation 6–627

Design 6–628

Setting 6–629

Testing..... 6–630

Appendix 6–630

Function block..... 6–630

Signal list..... 6–630

Setting table 6–631

1 Introduction

The protection and control terminals employ a multiprocessor design to ensure the best possible operational security and dependability. The included main protection and control functions are to a great extent independent of one another and each terminal can be ordered with individual options to satisfy the user’s needs in different applications in the best possible way. To achieve this, different binary inputs of a terminal can be configured to different functions. Various functional output signals are programmable to one or several binary outputs, as well as to the different inputs of other protection and control functions.

Each terminal has a few main functions as standard. These functions determine the basic application for a terminal, for example the distance protection function or the phase segregated line differential protection function. Additional functions, such as directional or non-directional earth-fault overcurrent protection, auto-reclosing function etc. are available as options.

The possible functional structure of each type of terminal within the REx 5xx family is described in the Buyer's Guides and also presented for each delivered unit separately in the corresponding documentation.

Each of the terminal related functions is described in detail in the documentation for the actual unit. The description of each function follows the same structure (where applicable):

- The application part states the most important reasons for the implementation of a particular protection function.
- The measuring principle gives a brief presentation of the measuring algorithm used for a particular function.
- The design part presents the general concept of a function, together with a list of the setting parameters and different signals.
- The setting instructions refer mostly to different application areas and give directions for setting of the particular parameters.
- The testing instructions describes primarily the necessary testing procedures and the requirements for the testing equipment. The expected results of some functions are also presented.

2 Design

The description of the design is chiefly based on simplified logic diagrams, which use IEC symbols, for the presentation of different functions, conditions etc. The functions are presented as a closed block with the most important internal logic circuits and configurable functional inputs and outputs.

Completely configurable binary inputs/outputs and functional inputs/outputs enable the user to prepare the REx 5xx with his own configuration of different functions, according to application needs and standard practice.

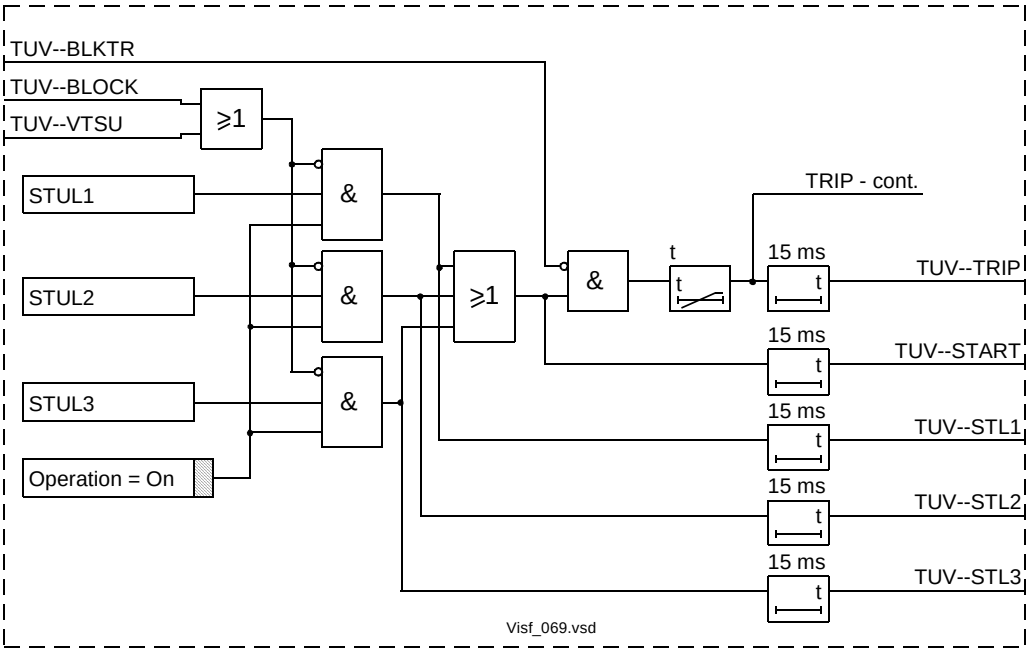

Figure 1: Example of a simplified logic diagram for a function block.

The names of the configurable logic signals consist of two parts divided by dashes. The first part consists of up to four letters and presents the abbreviated name for the corresponding function. The second part presents the functionality of the particular signal. According to this explanation, the meaning of the signal TUV--BLKTR in Figure 1: is as follows:

- The first part of the signal, TUV- represents the adherence to the **T**ime delayed **U**nder-**V**oltage function.
- The second part of the signal name, BLKTR informs the user that the signal will **BL**oc**K** the **TR**ip from the under-voltage function, when its value is a logical one (1).

Different binary signals have special symbols with the following significance:

- Signals drawn to the box frame to the left present functional input signals. It is possible to configure them to functional output signals of other functions as well as to binary input terminals of the REx 5xx terminal. Examples in Figure 1: are TUV--BLKTR, TUV--BLOCK

and TUV--VTSU.

- Signals in frames with a shaded area on their right side present the logical setting signals. Their values are high (1) only when the corresponding setting parameter is set to the symbolic value specified within the frame. Example in Figure 1: is the signal Operation = On. These signals are not configurable. Their logical values correspond automatically to the selected setting value.
- The internal signals are usually dedicated to a certain function. They are normally not available for configuration purposes. Examples in Figure 1: are signals STUL1, STUL2 and STUL3.
- The functional output signals, drawn to the box frame to the right, present the logical outputs of functions and are available for configuration purposes. The user can configure them to binary outputs from the terminal or to inputs of different functions. Typical examples in Figure 1: are signals TUV--TRIP, TUV--START etc.
- Other internal signals configurated to other function blocks are written on a line with an identity and a cont. reference. An example is the signal TRIP - cont. The signal can be found in the corresponding function with the same identity.

1 Application

Long transmission lines often transfer great quantities of electrical power from production to consumption areas. The imbalance of the produced and consumed electrical power at each end of the transmission line is very large. This means that a fault on the line can easily endanger the stability of a complete system.

The dynamic stability of a power system depends mostly on three parameters (at constant amount of transmitted electrical power):

- The type of the fault. Three-phase faults are the most dangerous, because no power can be transmitted through the fault point during fault conditions.
- The magnitude of the fault current. A high fault current indicates that the decrease of transmitted power is high.
- The total fault clearing time. The phase angles between the EMFs of the generators on both sides of the transmission line increase over the permitted stability limits if the total fault clearing time, which consists of the protection operating time and the breaker opening time, is too long.

The fault current on the long transmission lines depends mostly on the fault position and decreases with the distance from the generation point. So the protection must operate very quickly for faults very close to the generation (and relay) point, for which very high fault currents are characteristic.

So instantaneous, non-directional, phase-segregated, overcurrent protection (IOC), which can operate in 15 ms (50 Hz nominal system frequency) for faults characterized by very high currents, is included in some of the REx 5xx terminals. Refer to the ordering information for more details.

2 Theory of operation

The current-measuring elements within one of the built-in digital signal processors continuously measure the currents in all three phases, and compare them with the IP>> set value. A recursive Fouriers filter filters the current signals, and a separate trip counter prevents high overreaching of the measuring elements. The logical value of each phase current signal on the output of the digital signal processor (STIL1, STIL2 and STIL3 respectively) is equal to 1 if the measured phase current exceeds the preset value.

3 Design

The simplified logic diagram of the instantaneous phase overcurrent function is shown in figure 1.

The overcurrent function is disabled if:

- The terminal is in TEST status (TEST-ACTIVE is high) and the function has been blocked from the HMI (BlockIOC=Yes)
- The input signal IOC--BLOCK is high.

The IOC--BLOCK signal is a blocking signal of the instantaneous phase overcurrent function. It can be connected to a binary input of the terminal in order to receive a block command from external devices or can be software connected to other internal functions of the terminal itself in order to receive a block command from internal functions. Through OR gate it can be connected to both binary inputs and internal function outputs. The IOC--BLOCK signal blocks also the instantaneous residual overcurrent function, if this is installed in the terminal.

When the instantaneous phase overcurrent function is enabled, the output tripping signals IOC--TRL1, IOC--TRL2, IOC--TRL3, IOC--TRP and IOC--TRIP can operate. The duration of each output signal is at least 15 ms. This enables continuous output signals for currents, which go just a little above the set operating value.

The single phase trip signals IOC--TRL1, IOC--TRL2, and IOC--TRL3 are related to L1, L2, and L3 phases and therefore also suitable for the single phase tripping with single-phase auto-reclosing.

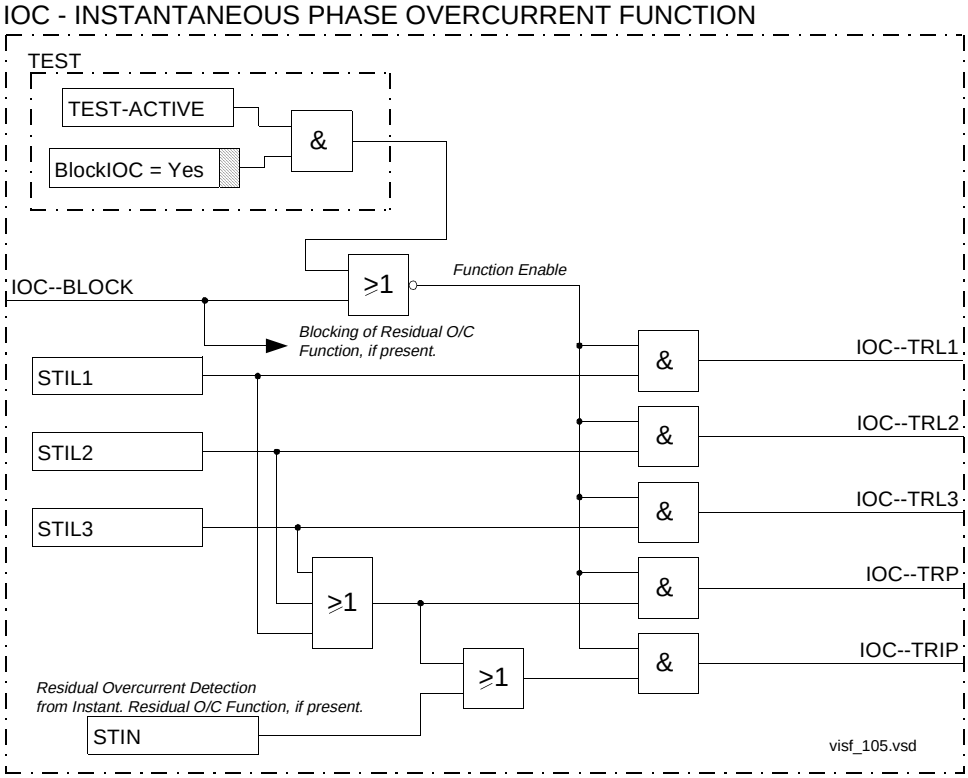

Figure 1: Simplified logic diagram of instantaneous overcurrent protection

The signal IOC--TRP is the logic OR of the three single phase trips. It can be used to trip the circuit breaker if it only has a three phase operation.

The IOC--TRIP output signal behaves as general instantaneous overcurrent trip when in the REx 5xx terminal also the instantaneous residual overcurrent function is implemented; i.e. this signal will be activated in

case of any single phase overcurrent or residual overcurrent detection (STIN). If only the instantaneous phase overcurrent function is installed in the terminal, then this signal behaves exactly as the signal IOC--TRP and can be used for signalizing.

4 Setting instructions

This protection function must operate only in a selective way. So check all system and transient conditions that could cause its unwanted operation.

Only detailed network studies can determine the operating conditions under which the highest possible fault current is expected on the line. In most cases, this current appears during three-phase fault conditions. But also examine single-phase-to-earth and two-phase-to-earth conditions.

Also study transients that could cause a high increase of the line current for short times. A typical example is a transmission line with a power transformer at the remote end, which can cause high inrush current when connected to the network and can thus also cause the operation of the built-in, instantaneous, overcurrent protection.

4.1 Meshed network without parallel line

The following fault calculations have to be done for three-phase, single-phase-to-earth and two-phase-to-earth faults. With reference to figure 2, apply a fault in B and then calculate the relay through fault phase current I_{fB}. The calculation should be done using the minimum source impedance values for Z_A and the maximum source impedance values for Z_B in order to get the maximum through fault current from A to B.

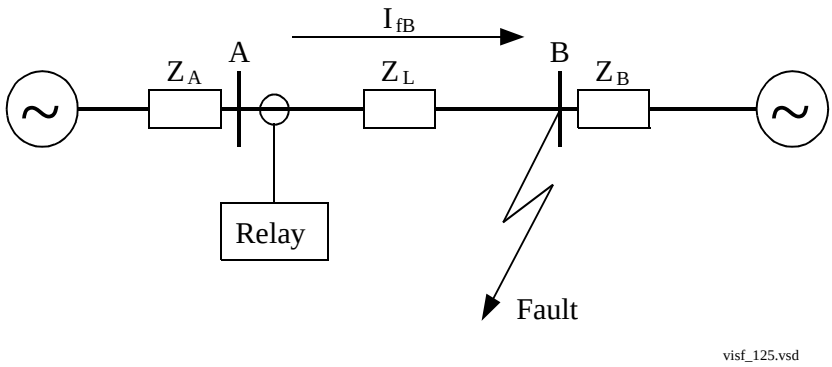

Figure 2: Through fault current from A to B: I_{fB}

Then a fault in A has to be applied and the through fault current I_{fA} has to be calculated (Figure 3). In order to get the maximum through fault current, the minimum value for Z_B and the maximum value for Z_A have to be considered.

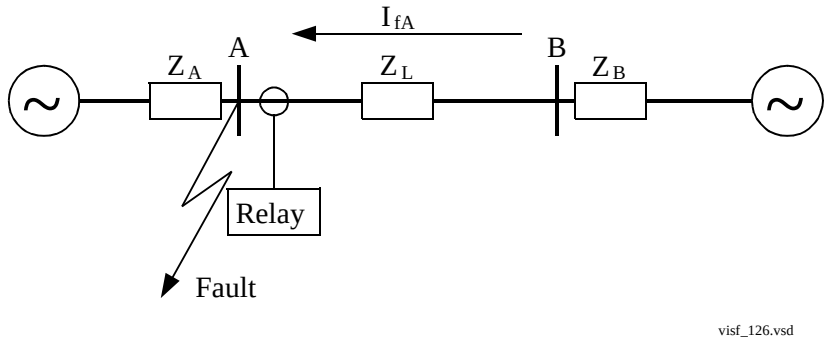

Figure 3: Through fault current from B to A: I_{fA}

The relay must not trip for any of the two trough fault currents. Hence the minimum theoretical current setting (*Imin*) will be:

$$Imin \geq MAX(I_{fA}, I_{fB}) \quad \text{(Equation 1)}$$

A safety margin of 5% for the maximum protection static inaccuracy and a safety margin of 5% for the maximum possible transient overreach have to be introduced. An additional 20% is suggested due to the inaccuracy of the instrument transformers under transient conditions and inaccuracy in the system data.

The minimum primary setting (*Is*) for the instantaneous phase overcurrent protection is then:

$$Is \geq 1,3 \cdot Imin \quad \text{(Equation 2)}$$

The protection function can be used for the specific application only if this setting value is equal or less than the maximum fault current that the relay has to clear (I_F in figure 4).

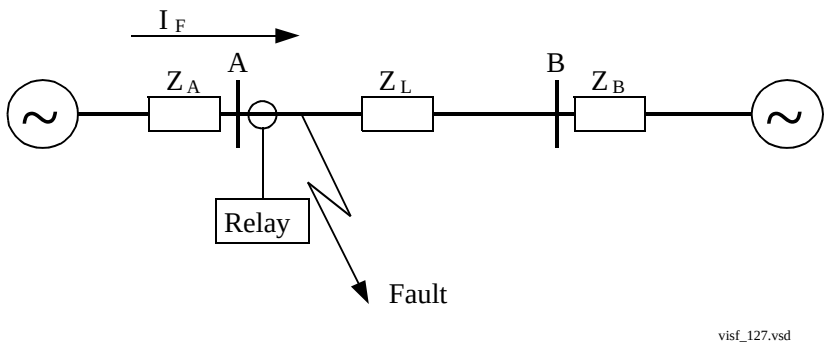

Figure 4: Fault current: I_F

The current transformer secondary setting current (Is_{SEC}) is:

$$Is_{SEC} = \frac{I_{SEC}}{I_{PRIM}} \cdot Is \qquad \text{(Equation 3)}$$

where I_{SEC} is the secondary rated current of the main CT and I_{PRIM} is the primary rated current of the main CT.

The relay setting value IP>> is given in percentage of the secondary base current value, I_{1b}, associated to the current transformer input I1. The value for IP>> is given from this formula:

$$IP>> = \frac{Is_{SEC}}{I_{1b}} \cdot 100 \qquad \text{(Equation 4)}$$

and this is the value that has to be set in the relay.

Set this value under the setting menu:

Settings
Functions
Group n
InstantOC

4.2 Meshed network with parallel line

In case of parallel lines, the influence of the induced current from the parallel line to the protected line has to be considered. One example is given in fig.5. where the two lines are connected to the same busbars. In this case the influence of the induced fault current from the faulty line (line 1) to the healthy line (line 2) is considered together with the two through fault currents I_{fA} and I_{fB} mentioned previously. The maximal influence from the parallel line for the relay in fig.5 will be with a fault at the C point with the C breaker open.

A fault in C has to be applied, and then the maximum current seen from the relay (I_M) on the healthy line (this applies for single-phase-to-earth and two-phase-to-earth faults) is calculated. The through fault current I_M is the sum of the induced fault current from line 1 and the fault current that would occur in line 2 with a zero mutual inductance M.

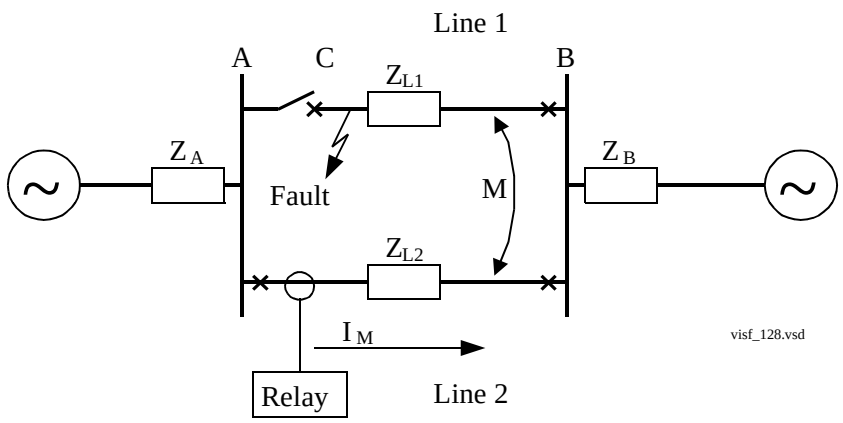

Figure 5: Two parallel lines. Influence from parallel line to the through fault current: I_M

The minimum theoretical current setting for the overcurrent protection function (*Imin*) will be:

$$Imin \geq MAX(I_{fA}, I_{fB}, I_M) \quad \text{(Equation 5)}$$

where I_{fA} and I_{fB} have been described in the previous paragraph. Considering the safety margins mentioned previously, the minimum setting (*Is*) for the instantaneous phase overcurrent protection is then:

$$Is \geq 1,3 \cdot Imin \quad \text{(Equation 6)}$$

The protection function can be used for the specific application only if this setting value is equal or less than the maximum phase fault current that the relay has to clear.

The current transformer secondary setting current (Is_{SEC}) is:

$$Is_{SEC} = \frac{I_{SEC}}{I_{PRIM}} \cdot Is \quad \text{(Equation 7)}$$

where I_{SEC} is the secondary rated current of the main CT and I_{PRIM} is the primary secondary rated current of the main CT.

The relay setting value IP>> is given in percentage of the secondary base current value, I_{1b}, associated to the current transformer input I1. The value for IP>> is given from this formula:

$$IP{>>} = \frac{Is_{SEC}}{I_{1b}} \cdot 100 \quad \text{(Equation 8)}$$

and this is the value that has to be set in the relay.

Set this value under the setting menu:

Settings
Functions
Group n
InstantOC

5 Testing

The function can be disabled during the test mode during these conditions:

- When the function should be blocked under the testing conditions, select the functions that should be blocked under the menu:

  Test
  TestMode
  BlockFunctions

- The terminal is set to test mode by setting the Operation=On, which appears under the menu:

  Test
  TestMode
  Operation

- The terminal is automatically set to test mode by applying the logical 1 to the TEST-INPUT functional input.

Important note: The function is blocked if the corresponding setting under the BlockFunctions menu remains on and the TEST-INPUT signal remains active.

The instantaneous phase overcurrent function does not have to be blocked in order to be tested.

Check the operating values of the current measuring elements and corresponding functions during the commissioning and during regular maintenance tests. ABB Network Partner recommends, although it is not an absolute requirement, the use of the RTS 21 (FREJA) testing equipment for secondary injection-testing purposes.

Before testing, connect the testing equipment according to the valid terminal diagram of the specific REx 5xx terminal. Pay special attention to the correct connection of the input and output current terminals, and to the connection of the residual current.

Follow these steps:

1.1 Check if the input and output logical signals in figure 1 are configured to the corresponding binary inputs and outputs of the tested terminal. If not, configure them for testing purposes. Set the operation of the IOC protection to On mode.

1.2 Set the input logical signals to the logical zero and note on the local HMI that the IOC--TRP logical signal is equal to the logical 0. Values of the logical signals belonging to the instantaneous overcurrent protection are available under menu tree:

Service Report
Functions
InstantOC
FuncOutput

1.3 Quickly increase the injected current (measured current) in the L1 phase until the IOC--TRL1 signal appears. Record the operating value. Decrease the measured current to zero (observe the maximum permitted overloading of the current circuits in the terminal). Compare the measured operating current with the set value. The result should be within the 5% accuracy limits with the addition of the accuracy class of the testing equipment.

1.4 Measure the operating current in the remaining two phases in a similar way.

1.5 Quickly set the measured current (fault current) in one phase to about 1.5 times the measured operating current, and disconnect the current with the switch.

1.6 Switch on the fault current and measure the operating time of the IOC protection. Use the IOC--TRP signal from the configured binary output to stop the timer.

1.7 Connect the rated dc voltage to the IOC--BLOCK configured binary input, and switch on the fault current. No IOC--TRP signal should appear. Switch off the fault current. Disconnect the dc voltage from the IOC--BLOCK binary input.

1.8 Set the operation of the protection at Off mode and switch on the fault current. Note that no corresponding binary signals should appear on the terminal.

1.9 Configure (if necessary) the terminal to its normal operating configuration.

6 Appendix

6.1 Function block

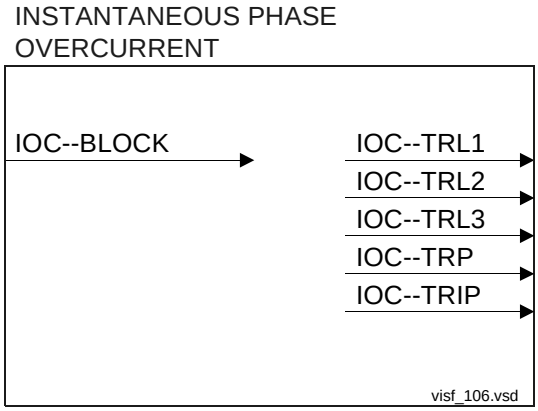

6.2 Function block diagram

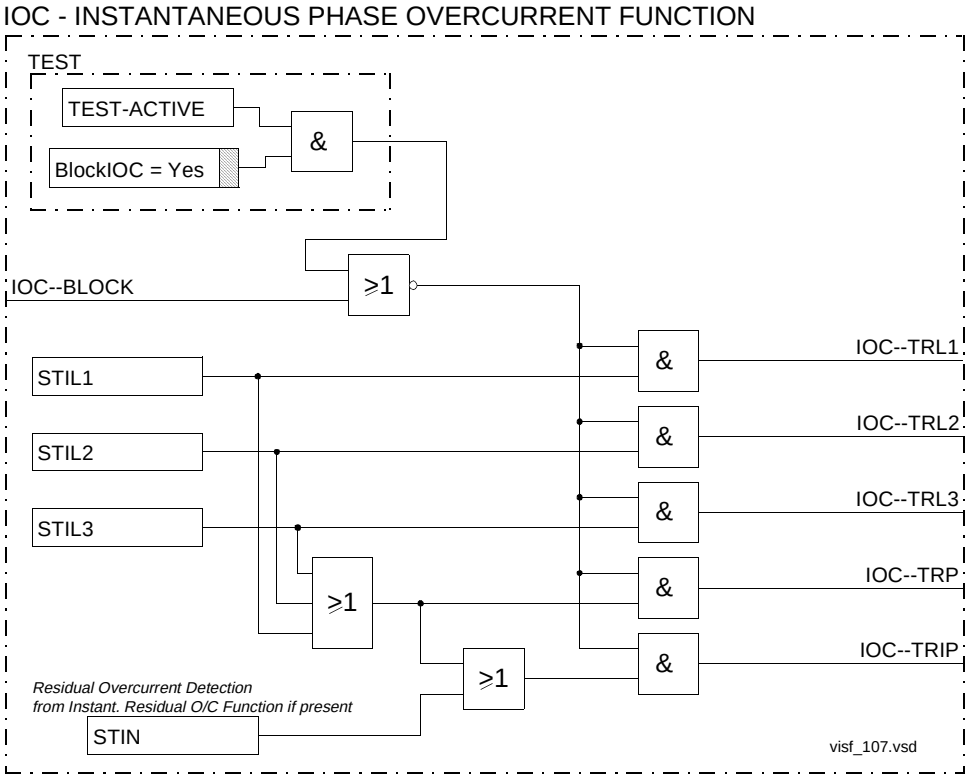

6.3 Signal list

Block	Signal	Type	Description
IOC--	BLOCK	IN	Block of instantaneous overcurrent function[1]
IOC--	TRL1	OUT	Trip by instantaneous overcurrent phase L1
IOC--	TRL2	OUT	Trip by instantaneous overcurrent phase L2
IOC--	TRL3	OUT	Trip by instantaneous overcurrent phase L3
IOC--	TRP	OUT	Trip by instantaneous phase overcurrent
IOC--	TRIP	OUT	Trip by instantaneous overcurrent[2]

1. blocks also the instantaneous residual overcurrent function, if it is installed in the terminal.
2. trip also by instantaneous residual overcurrent function, if it is installed in the terminal

6.4 Setting table

Parameter	Range	Unit	Default	Parameter description
Operation	Off, On		Off	Instantaneous overcurrent function Off/On[1]
IP>>	50-2000	%	100	Operating phase current, as a percentage of I1b

1. it affects also the instantaneous residual overcurrent function, if it is installed in the terminal.

1 Application

The time delayed phase overcurrent protection can be used as independent overcurrent protection, particularly for radially fed systems, or as back-up protection to the main distance or line differential protection functions. In the first case the protected zone of the time delayed overcurrent protection reaches upto the next overcurrent protection and works in its zone as back-up protection. The programmable time delay (definite time) of the function allows the time selectivity through an appropriate time grading among the overcurrent relays protecting the system.

Where the function acts as back-up for the main line protection, the trip from the overcurrent protection can be activated when the main protection function is blocked (i.e. by the fuse failure protection) or it can be active all the time.

In some cases, where it could be difficult to achieve a selective trip, the function can be used as a helpful overcurrent signallization for the post-fault analysis.

2 Theory of operation

The current-measuring elements within one of the built-in digital signal processors continuously measure the currents in all three phases, and compare them with the IP> set value. A recursive Fouriers filter filters the current signals, and a separate trip counter prevents high overreaching of the measuring elements. The logical value of each phase current signal on the output of the digital signal processor (STIL1, STIL2 and STIL3 respectively) is equal to 1 if the measured phase current exceeds the set value. These signals will instantaneously set their respective output starting signals (TOC--STL1, TOC--STL2, TOC--STL3), if not the function is blocked.

If any of the three phase currents exceeds the set value for a period longer than the set time tP, then a three phase trip is generated from the output signal TOC--TRP.

3 Design

The simplified logic diagram of the time delayed phase overcurrent function is shown in figure 1.

The function is disabled (blocked) if:

- The terminal is in TEST status (TEST-ACTIVE is high) and the function has been blocked from the HMI (BlockTOC=Yes)
- The input signal TOC--BLOCK is high

The TOC--BLOCK signal is a blocking signal of the time delayed phase overcurrent function. It prevents the changing of any trip or starting output signals. It can be connected to a binary input of the terminal in order to receive a block command from external devices or can be software connected to other internal functions of the terminal itself in order to receive a block command from internal functions. Through OR gate it can be con-

nected to both binary inputs and internal function outputs. The TOC--BLOCK signal blocks also the time delayed residual overcurrent protection, if this is installed in the same REx 5xx terminal.

When the function is enabled, there is still the possibility to block the output trips only, without affecting the start signals, that will always be active. This can be obtained with the function input TOC--BLKTR. Similarly to the TOC--BLOCK signal, also the time delayed residual overcurrent protection, if present in the terminal, is blocked from TOC-BLKTR.

The duration of each output signal is at least 15 ms. This enables continuous output signals for currents, which go just a little above the set operating value.

The output trip signal TOC--TRP is a three phase trip. Single phase information are available from the starting signals, that are phase segregated.

The TOC--TRIP output signal behaves as general time delayed instantaneous overcurrent trip when in the REx 5xx terminal also the time delayed residual overcurrent function is implemented; i.e. this signal will be activated in case of any time delayed overcurrent or time delayed residual overcurrent trip (TRN). If only the time delayed phase overcurrent function is installed in the terminal, then this signal behaves exactly as the signal TOC--TRP and can be used for signallization.

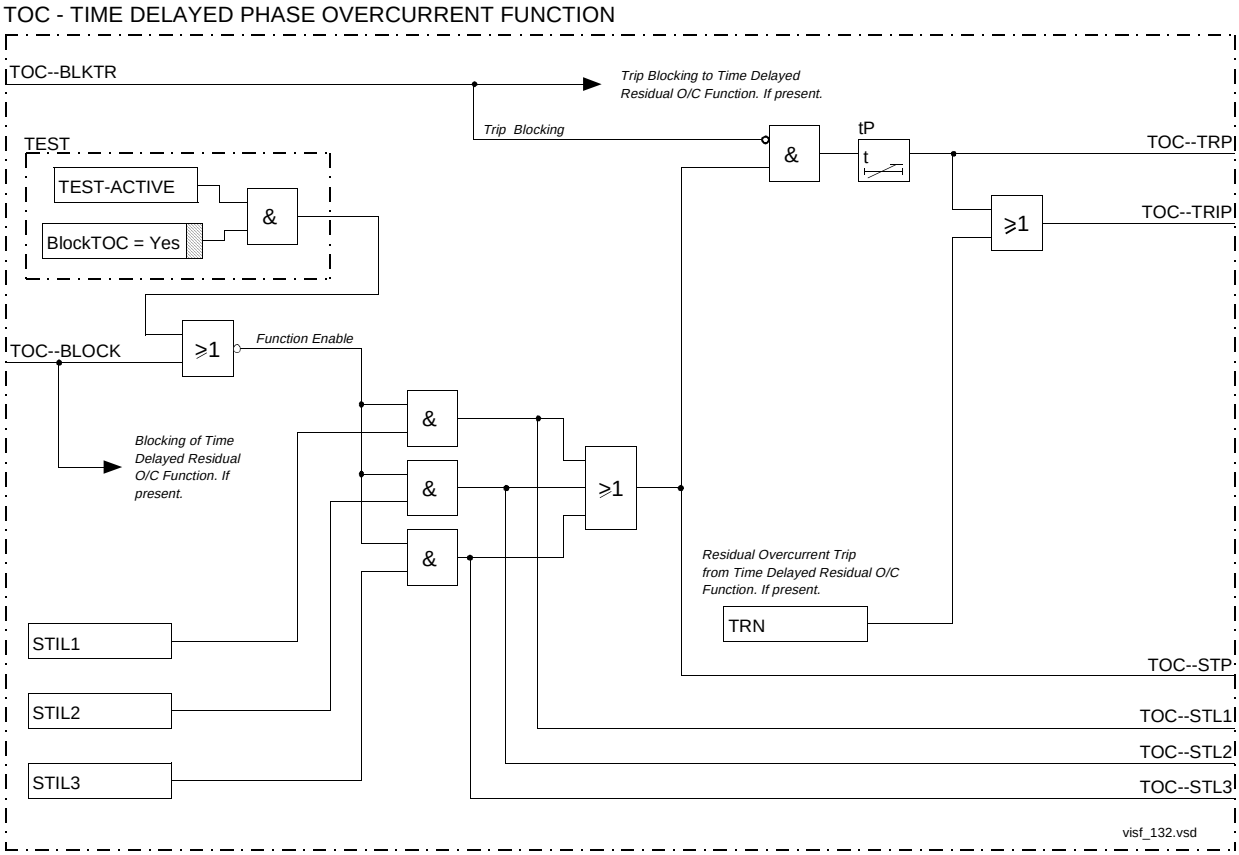

Figure 1: Simplified logic diagram of time delayed overcurrent protection

4 Setting instructions

The current setting value must be selected in order to permit the detection of the lowest short circuit current without having any unwanted tripping or starting of the function under normal load conditions. The following relation has to be considered for the setting of the operating current (Is) of the function:

$$1.2 \cdot \frac{ILmax}{K} < Is < 0.7 \cdot IFmin \qquad \text{(Equation 1)}$$

where $ILmax$ is the maximum permissible load current of the protected unit, $IFmin$ is the minimum fault current that the relay has to clear. The values 1.2 and 0.7 are safety factors. K is the reset ratio of the overcurrent function: 0.95.

The settable time delay tP allows the time selectivity of the overcurrent function, according to the time grading plan of all the other overcurrent protections in the system. The time setting value should also consider transients that could cause a high increase of the line current for short times. A typical example is a transmission line with a power transformer at the remote end, which can cause high inrush current when energized.

Where the time delayed overcurrent function is used as back-up of impedance protection, normally the time delay is set higher than the time delay of distance zone 2 (or 3) in order to avoid interferences with the impedance measuring system.

4.1 Setting of operating current IP>

If Is is the primary setting operating value of the function, than the secondary setting current (Is_{SEC}) is:

$$Is_{SEC} = \frac{I_{SEC}}{I_{PRIM}} \cdot Is \qquad \text{(Equation 2)}$$

where I_{SEC} is the secondary rated current of the main CT and I_{PRIM} is the primary rated current of the main CT.

The relay setting value IP> is given in percentage of the secondary base current value, I_{1b}, associated to the current transformer input I1. The value for IP> is given from this formula:

$$IP> = \frac{Is_{SEC}}{I_{1b}} \cdot 100 \qquad \text{(Equation 3)}$$

and this is the value that has to be set in the relay.

Set this value under the setting menu:

Settings
Functions
Group n
TimeDelayOC

on the value IP>.

4.2 Setting of time delay tP

Set the time delay of the function, tP, under the setting menu:

Settings
Functions
Group n
TimeDelayOC

on the value tP.

5 Testing

The function can be disabled during the test mode during these conditions:

- When the function should be blocked under the testing conditions, select the functions that should be blocked under the menu:

  Test
  TestMode
  BlockFunctions

- The terminal is set to test mode by setting the Operation=On, which appears under the menu:

  Test
  TestMode
  Operation

- The terminal is automatically set to test mode by applying the logical 1 to the TEST-INPUT functional input.

Important note: The function is blocked if the corresponding setting under the BlockFunctions menu remains on and the TEST-INPUT signal remains active.

The delayed phase overcurrent function must not be blocked in order to be tested.

Check the operating values of the current measuring elements and corresponding functions during the commissioning and during regular maintenance tests. ABB Network Partner recommends, although it is not an absolute requirement, the use of the RTS 21 (FREJA) testing equipment for secondary injection-testing purposes.

Before testing, connect the testing equipment according to the valid terminal diagram of the specific REx 5xx terminal. Pay special attention to the correct connection of the input and output current terminals.

Follow these steps:

1.1 Check if the input and output logical signals in figure 1 are configured to the corresponding binary inputs and outputs of the tested terminal. If not, configure them for testing purposes. Set the operation of the TOC protection to On mode.

1.2 Set the input logical signals to the logical zero and note on the local HMI that the TOC--TRP logical signal is equal to the logical 0. Values of the logical signals belonging to the time delayed overcurrent protection are available under menu tree:

Service Report
Functions
TimeDelayOC
FuncOutput

1.3 Set the time delay tP to 300 ms.

1.4 Quickly increase the injected current (measured current) in the L1 phase until the starting signal TOC--STL1 appears. Record the operating value. Decrease the measured current to zero (observe the maximum permitted overloading of the current circuits in the terminal). Compare the measured operating current with the set value. The result should be within the 5% accuracy limits with the addition of the accuracy class of the testing equipment.

1.5 Measure the operating current in the remaining two phases in a similar way.

1.6 Quickly set the measured current (fault current) in one phase to about 1.5 times the measured operating current, and disconnect the current with the switch.

1.7 Switch on the fault current and measure the operating time of the TOC protection. Use the TOC--TRP signal from the configured binary output to stop the timer. Compare the measured time with the set value tP.

1.8 Connect the rated dc voltage to the TOC--BLOCK configured binary input, and switch on the fault current. No output signals should appear. Switch off the fault current. Disconnect the dc voltage from the TOC--BLOCK binary input.

1.9 Connect the rated dc voltage to the TOC--BLKTR configured binary input, and switch on the fault current. No trip signals (TOC--TRP, TOC--TRIP) should appear, but starting signals (TOC--STL_, TOC-STP) will trigger instead. Switch off the fault current. Disconnect the dc voltage from the TOC--BLKTR binary input.

2.0 Set the operation of the protection at Off mode and switch on the fault current. Note that no corresponding binary signals should appear on the terminal. Switch off the fault current.

2.1 Configure (if necessary) the terminal to its normal operating configuration.

6 Appendix

6.1 Function block

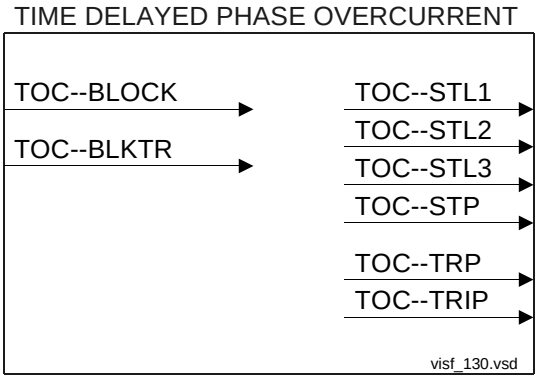

6.2 Function block diagram

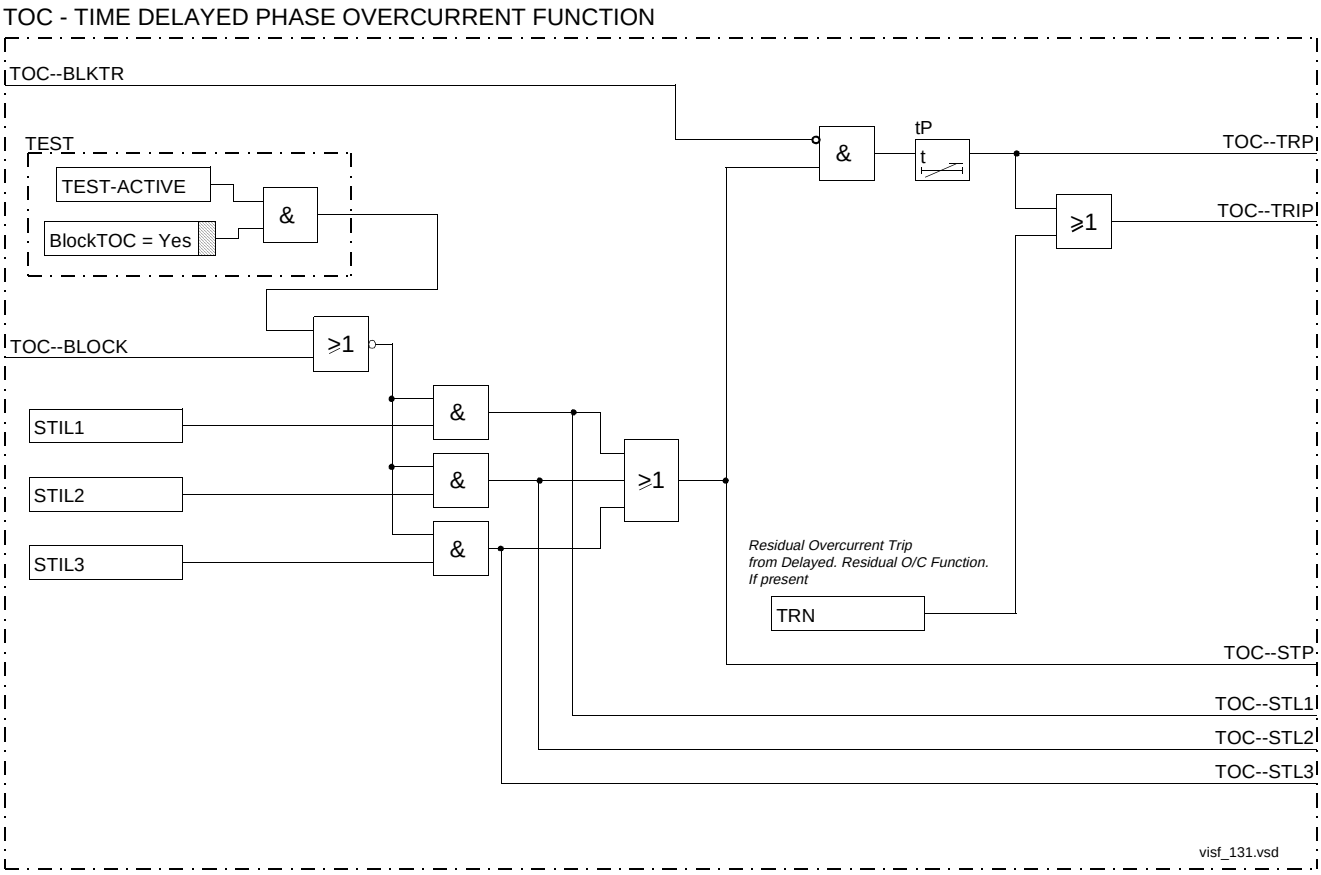

6.2.1 Signal list

Block	Signal	Type	Description
TOC--	BLOCK	IN	Block of time delayed overcurrent function[1]
TOC--	BLKTR	IN	Block of trip from time delayed overcurrent function[1]
TOC--	STL1	OUT	Start phase overcurrent phase L1
TOC--	STL2	OUT	Start phase overcurrent phase L2
TOC--	STL3	OUT	Start phase overcurrent phase L3
TOC--	STP	OUT	Start phase overcurrent
TOC--	TRP	OUT	Trip by time delayed phase overcurrent function
TOC--	TRIP	OUT	Trip by time delayed phase overcurrent function[2]

1. affects also the time delayed residual overcurrent function if it is installed in the terminal.
2. trip also by time delayed residual overcurrent function if it is installed in the terminal.

6.2.2 Setting table

Parameter	Range	Unit	Default	Parameter description
Operation	Off, On		Off	Time delayed overcurrent function On/Off[1] (*)
IP>	10-400	%	100	Operating phase current, as a percentage of I1b
tP	0.000-60.000	s	10.000	Time delay phase current function

1. affects also the time delayed residual overcurrent function if it is installed in the terminal.

1 Application

Circuit breaker pole position discordance can occour at the operation of a breaker with independent operating gears for the three poles. The reason may be an interruption in the trip coil circuits, or a mechanical failure resulting in a stuck breaker pole. A disagreement caused by one ore two poles failing to close or to open can be tolerated for just a limited time, for instance where the circuit breaker is driven by the single phase auto-reclosing.

The pole discordance function (PD) detects a breaker pole position discrepancy not generated by a single pole reclosing and generates a three phase command trip to the circuit breaker itself.

2 Theory of operation

The operation of the pole discordance function is based on checking the position of the circuit breaker through six of its auxiliary contacts: three parallel connected normally open contacts are connected in series with three parallel connected normally closed contacts. This hard-wired logic is very often integrated in the circuit breaker control cabinets and gives a closed signal in case of pole discordance in the circuit breaker. This signal is connected to the PD---POLDISC input of the pole discordance function. If the function is enabled, after a short delay, the activation of this input causes a trip command (PD---TRIP).

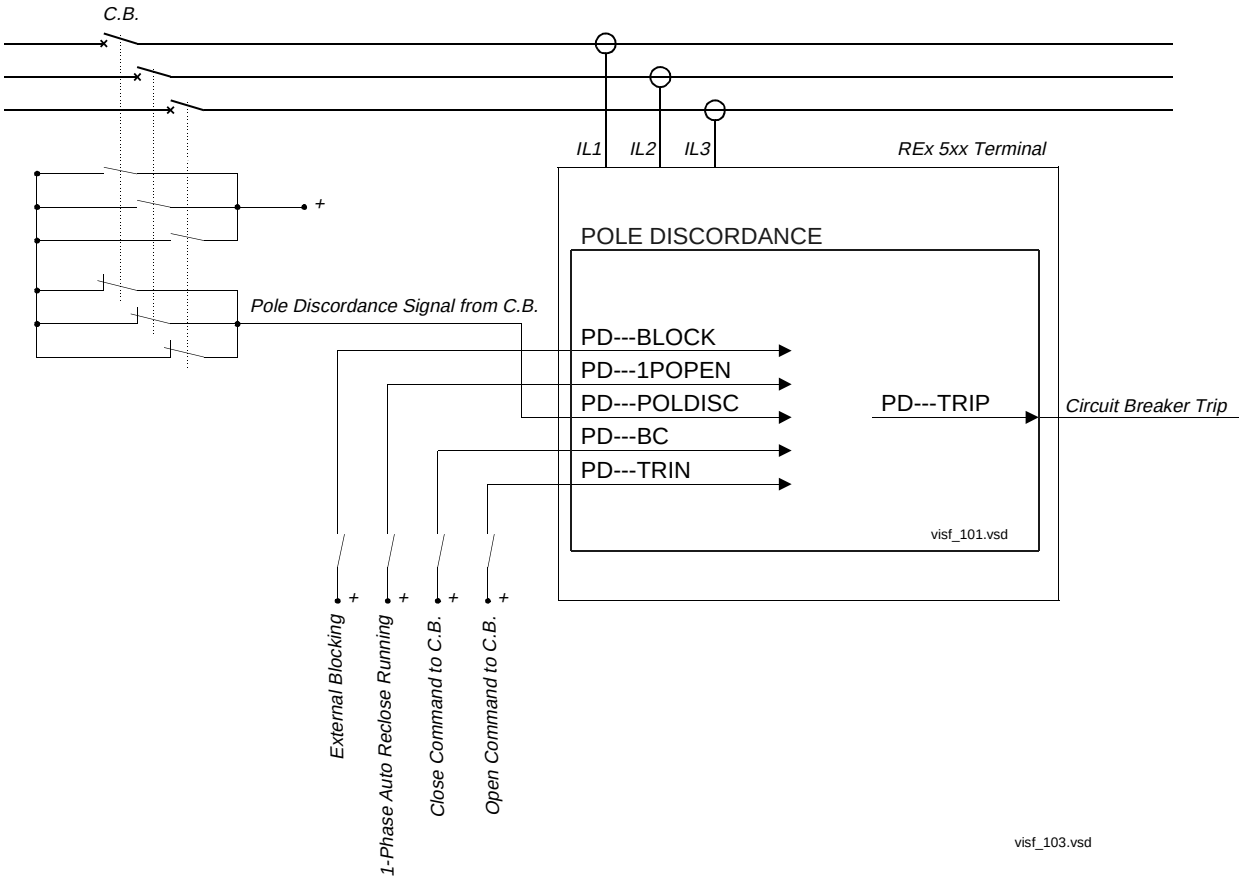

Figure 1: Typical connection diagram for pole discordance function

In addition the PD function performs a parallel detection of pole discordance based on current comparison in the breaker poles. This current based detection is enabled only for a few time after the breaker has received a closing or opening command in order to avoid unwanted operation in case of unsymmetrical load in service. If the circuit breaker has received a command (open or close), the PD function is enabled, and the current conditions are fulfilled, then a trip command is generated from the pole discordance function (PD---TRIP) after a short delay.

Figure 1 shows the typical application connection for the pole discordance function.

3 Design

The simplified block diagram of the pole discordance function is shown in figure 2.

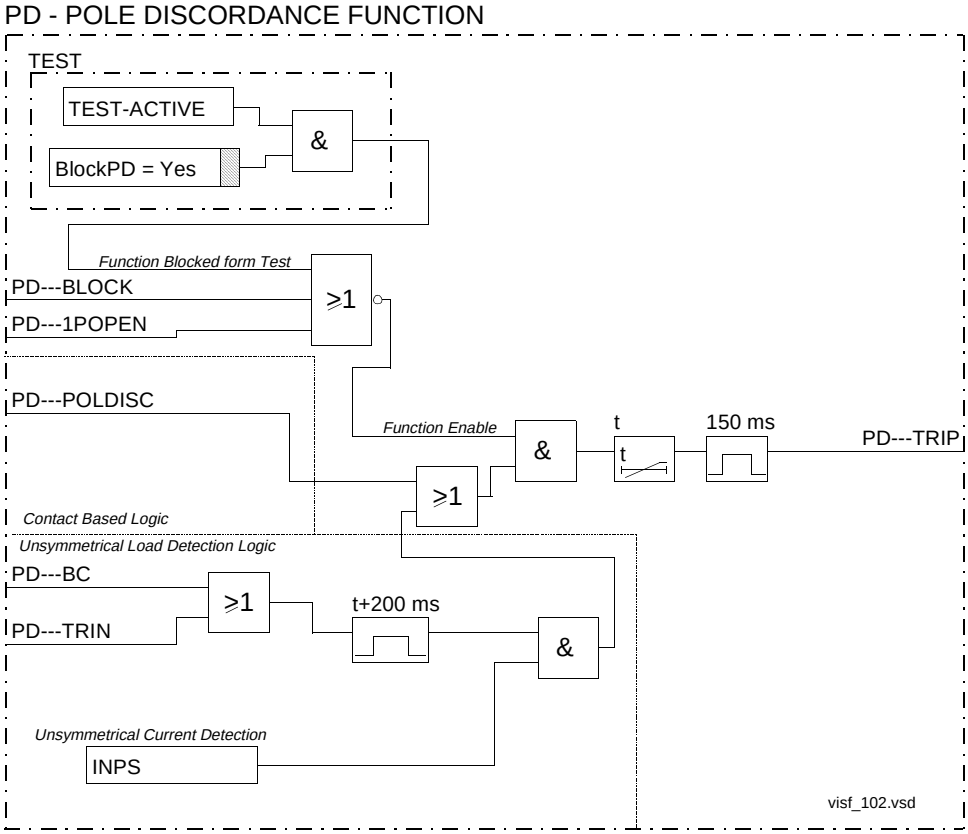

Figure 2: Simplified block diagram of pole discordance function

The pole discordance function is disabled if:

- The terminal is in TEST status (TEST-ACTIVE is high) and the function has been blocked from the HMI (BlockPD=Yes)
- The input signal PD---BLOCK is high
- The input signal PD---1POPEN is high

The PD---BLOCK signal is a general purpose blocking signal of the pole discordance function. It can be connected to a binary input of the terminal in order to receive a block command from external devices or can be software connected to other internal functions of the terminal itself in order to receive a block command from internal functions. Through OR gate it can be connected to both binary inputs and internal function outputs.

The PD---1POPEN signal blocks the pole discordance operation when a single phase auto-reclosing cycle is in progress. It can be connected to the output signal AR01-1PT1 if the autoreclosing function is integrated in the terminal; if the auto-reclosing function is an external device, then PD---1POPEN has to be connected to a binary input of the terminal and this binary input is connected to a signallisation “1phase auto-reclosing in progress” from the external auto-reclosing device.

If the pole discordance function is enabled, than two different criteria will generate a trip signal (PD---TRIP):

- Pole discordance signalling from the circuit breaker.
- Unsymmetrical load detection.

3.1 Pole discordance signalling from circuit breaker

If one or two poles of the circuit breaker have failed to open or to close (pole discordance status), then the function input PD---POLDISC is activated from the pole discordance signal derived from the circuit breaker auxiliary contacts (one NO contact for each phase connected in parallel, and in series with one NC contact for each phase connected in parallel) and, after a settable time interval t (0-60 s), a 150 ms trip pulse command (PD---TRIP) is generated by the pole discordance function.

3.2 Unsymmetrical load detection

The unsymmetrical load detection is based on the checking that:

- any phase current is lower than 80% of the highest current in the remaining two phases
- the highest phase current is grater than 10% of the rated current

If these conditions are both true, than an unsymmetrical condition is detected and the internal signal INPS is turned high. This detection is enabled to generate a trip after a set time delay t (0-60 s) if the detection occours in the next 200 ms after the circuit breaker has received a command to operate and if the unbalance lasts for the whole time t. This permits to avoid unwanted operation at unsymmetrical load in service.

The pole discordance function is informed that a trip or close command has been given to the circuit breaker through the inputs PD---BC (for closing command information) and PD---TRIN (for opening command information). These inputs can be connected to terminal binary inputs if the information are generated from the field (i.e. from auxiliary contacts of

the close and open push buttons) or may be software connected to the outputs of other integrated functions (i.e. close command from a control function or a general trip from integrated protections).

OR gates will allow to connect the input signals PD---BC and PD---TRIN to both terminal internal and external signals.

4 Setting

The setting parameters are accessible through the HMI. The parameters for the pole discordance function are found in the HMI-tree under:

Settings
Functions
Group 1,2,3 and 4
PoleDiscord

The parameters and their setting ranges are shown in the appendix.

Comments regarding settings:

Operation: Pole discordance protection On/Off. Activation or disactivation of the function.

Time delay , t: Delay timer. The time delay is not critical because the pole discordance function operates mainly with load conditions. If only the contact based function is used, the time delay should be chosen between 0.5 and 1 s.If also the current detection function is used, it is recommended to set the time delay at 3-4 s, depending on the application, in order for the unbalance to stabilize. The setting range of the time delay is 0 - 60 s.

5 Testing

5.1 General

The pole discordance function can be disabled during the test mode during these conditions:

- If the function should be blocked under the testing conditions, select the PD function under the menu:

  Test
  TestMode
  BlockFunctions

- The terminal is set to test mode by setting the Operation=On, which occurs under the menu:

  Test
  TestMode
  Operation

The terminal is automatically set to test mode by applying a logical 1 to the TEST-INPUT functional input.

Note: the function is blocked if the corresponding setting under the BlockFunctions menu remains on and the TEST-INPUT signal remains active.

The pole discordance function must not be blocked in order to be tested.

ABB Network Partner recommends, although it is not an absolute requirement, the use of testing equipment of type RTS 21 (FREJA) for secondary injection tests.

The used test equipment should be capable of providing an independent three-phase supply of currents to the tested terminal. Furthermore it must be possible to change the values of currents and phase angles between the measuring quantities, independent of each other, for each phase separately. The test currents should have a common source, with a very small content of higher harmonics.

5.2 Testing method

The settings shown in the following tests can be used as a reference during testing. After the tests the equipment should be restored to the normal or desiderd settings.

The following steps are necessary for testing the pole discordance protection function:

1.1 Check if the input and output logical signals of the function are configured to the corresponding binary inputs and outputs of the tested terminal. If not, configure them for testing purposes. .

1.2 Set the operation of the PD protection to On mode from the HMI according to below:

PoleDiscordance Operation=On
t = 1.0 s

1.3 This test checks the non operation for unsymmetrical load not related to a command to the circuit breaker.

Apply a symmetrical three phase current of 200 mA to the current inputs of the terminal. Turn off the current injection in phase L1 (IL1=0, IL2=200mA, IL3=200 mA). Wait for a few seconds and verify that the trip signal PD---TRIP does not appear on the corresponding binary output or on the local HMI unit.

Repeat the same procedure for phases L2 and L3.

1.4 This test checks the trip for unsymmetrical load related to an open or close command to the circuit breaker.

Apply a symmetrical three phase current of 200 mA to the current inputs of the terminal. Turn off the current injection in phase L1 (IL1=0, IL2=200mA, IL3=200 mA).

Activate the binary input PD---BC (or the binary input PD---TRIN) and verify that after 1s the trip signal PD---TRIP appears on the corresponding binary output or on the local HMI unit.

Repeat the same procedure for phases L2 and L3.

1.5 This test checks the trip by activation of the pole discordance signalling from the circuit breaker auxiliary contacts.

Do not apply any current to the terminal current inputs.Activate the binary input PD---POLDISC and verify that after 1s the trip signal PD---TRIP appears on the corresponding binary output or on the local HMI unit.

6 Appendix

6.1 Function block

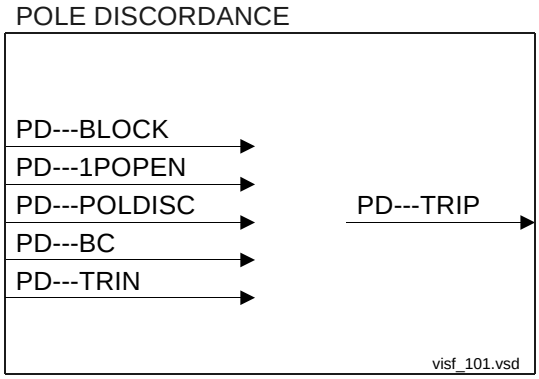

6.2 Function block diagram

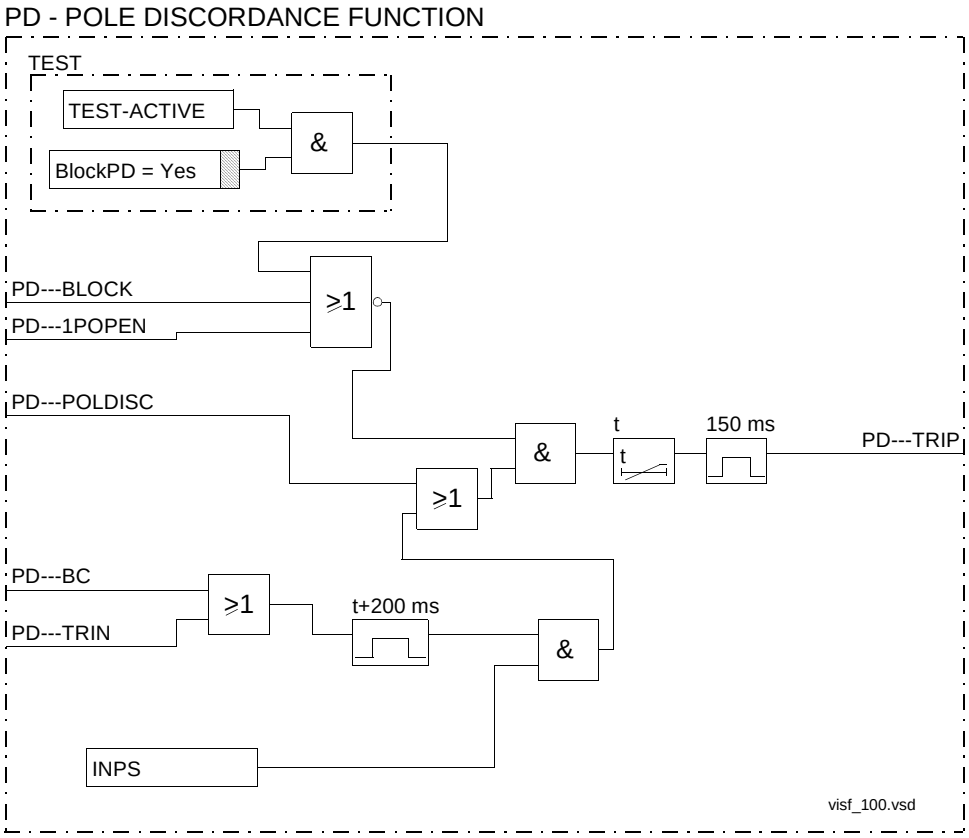

6.3 Signal list

Block	Signal	Type	Description
PD---	BLOCK	IN	Block of pole discordance function
PD---	1POPEN	IN	One phase open
PD---	POLDISC	IN	Pole discordance
PD---	BC	IN	Breaker closing
PD---	TRIN	IN	Activate from external trip
PD---	TRIP	OUT	Trip by pole discordance function

6.4 Setting table

Parameter	Range	Unit	Default	Parameter description
Operation	Off, On		Off	Pole discordance protection On/Off
t	0.000-60.000	s	0.500	Delay timer

1 Application

This function issues a back-up to trip adjacent circuit breakers in case of a tripping failure of the circuit breaker (CB), and clears the fault as requested by the object protection.

The breaker-failure function is started by a protection trip command, from the line and busbar protection through the breaker-related trip relays. The start can be single-phase or three-phase. Correct fault current clearing or failure is detected by a current check in each phase. The current level can be set at 0,05 to 2 times the rated current.

Retrip of the faulty CB can be done with or without current check. A delay, 0-60 s, can be set for the retrip.

The use of retrip, limits the impact on the power system if the breaker-failure protection function (BFP) is started by mistake during testing or other maintenance work.

A second time step is used for the back-up trip command. It should be connected to trip the adjacent breakers, to clear the busbar section and intertrip the remote end, if so required. The time setting range is 0-60 s.

By using separate timers for each phase, correct operation at evolving faults is ensured.

The timer setting should be selected with a certain margin to allow variation in the normal fault clearing time. The properties of the BFP function allow the use of a small margin.

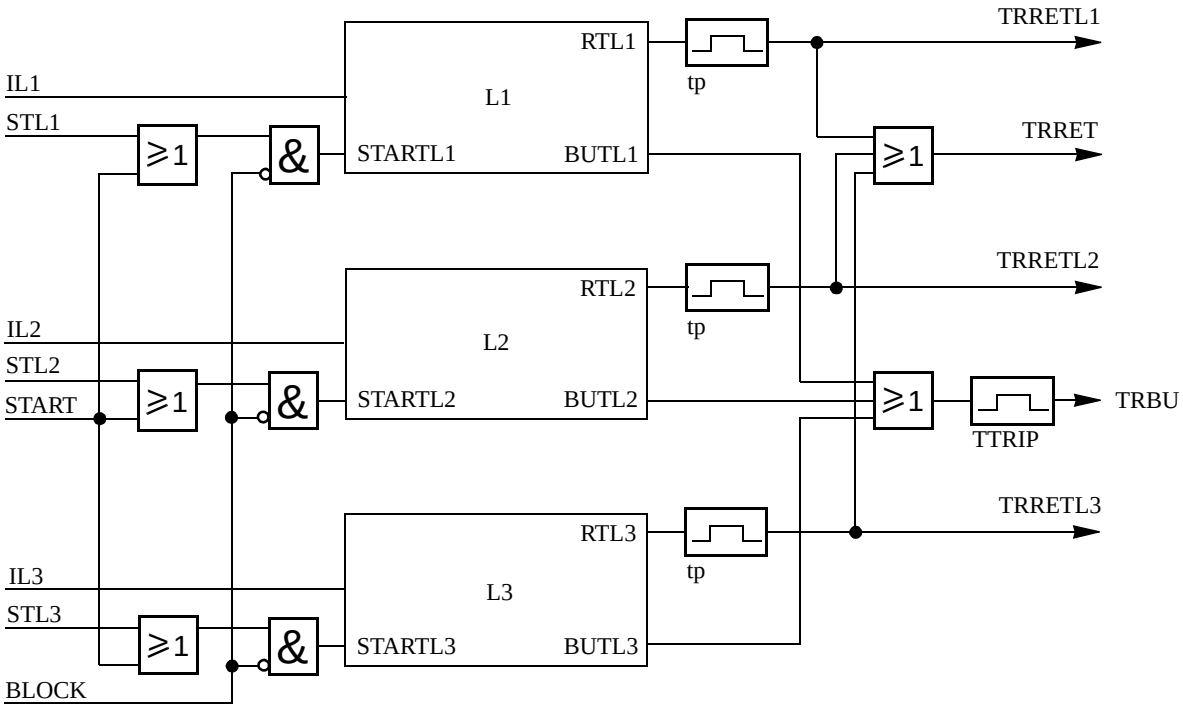

Figure 1: Start and trip functions

The application functions of the protection are:

- Individual phase-current detection
- Two time steps, one for retrip of the related circuit breaker and one for the back-up trip of the adjacent circuit breakers
- Selection of current controlled or unconditional retrip
- Phase separated timers gives correct operation at an evolving fault
- Accurate timers and current elements reset in 10 ms, allowing the use of short back-up trip time

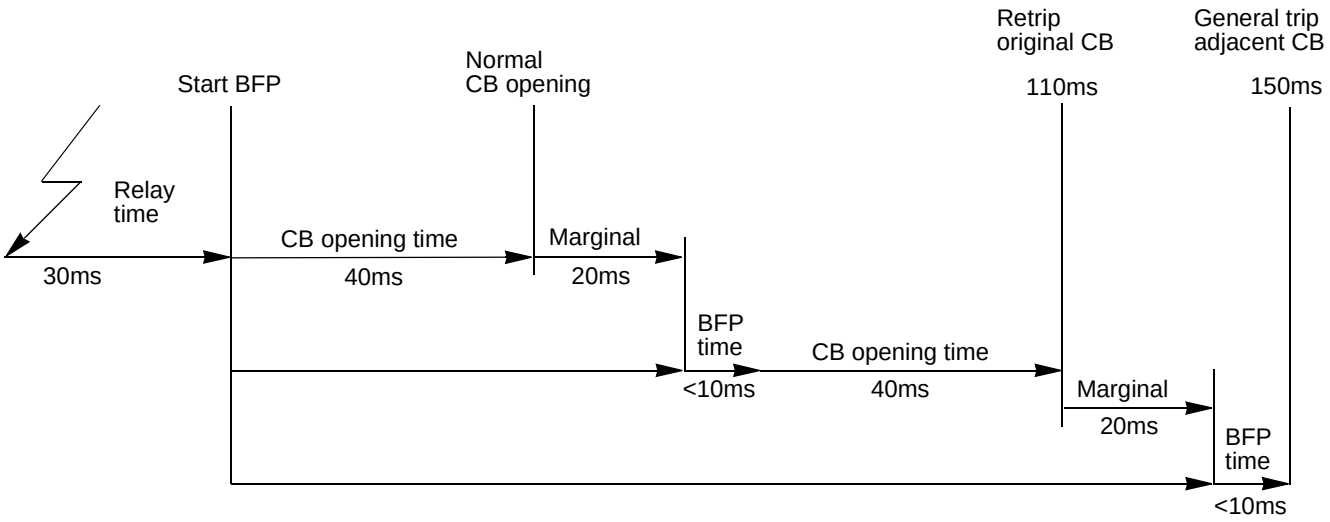

Figure 2: Time sequence

2 Theory of operation

The breaker-failure protection starts on a single-phase or three-phase condition, either from an external protection, or internally from a protection trip signal in the terminal.

The breaker receiving the original protection trip command can be retripped from the BFP. The retrip can be controlled by a current check, or carried out as a direct retrip without any current check. The direct retrip can be used, because the breaker-to-trip has already received a tripping command, and the direct retrip does not cause any unselective tripping

The use of retrip, limits the extent of unwanted power disconnection in case of an accidental start of the BFP at work in the initiating circuits, with the primary circuit in service and the load above the set current level.

The back-up trip is sent to the adjacent circuit breakers in order to clear the fault and disconnect the failing circuit breaker.

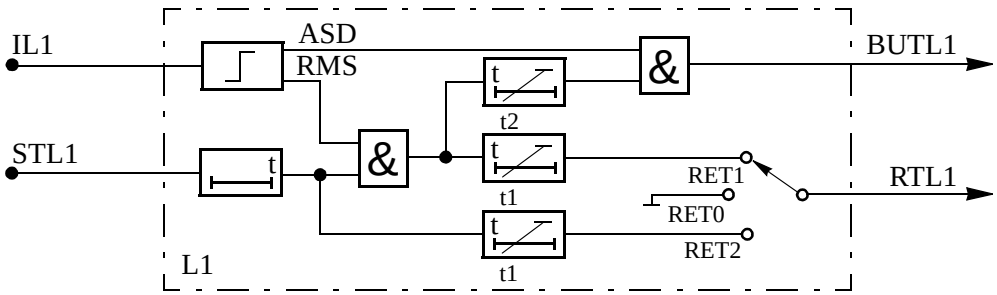

RET0: No retrip
RET1: Retrip with current check
RET2: Unconditional retrip

Figure 3: Logic diagram of breaker-failure protection, phase L1

2.1 Input and output signals

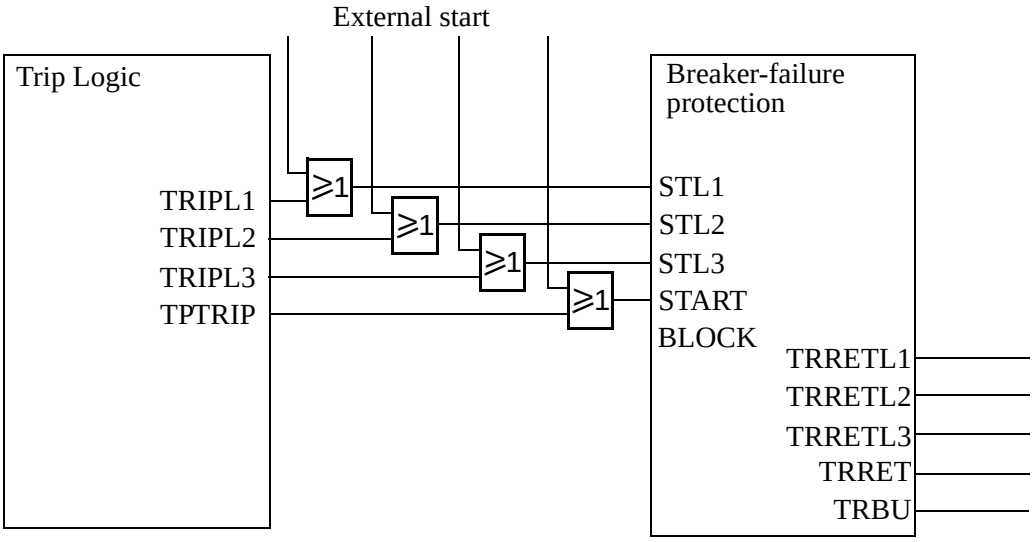

Figure 4: Input and output signals

The *connectable* inputs are connectable by configuration to the binary inputs of the terminal or to other internal functions' outputs. The outputs are connectable by configuration to the binary output relays. "Connectables" and "outputs" can be connected to the free-logic functions of the unit, OR gates, and in that way add connection links

Table 1:

Input signals:	**Start of breaker-failure protection:**
BFP--STL1	Phase L1
BFP--STL2	Phase L2
BFP--STL3	Phase L3
BFP--START	Three-phase start
BFP--BLOCK	Block of BFP
Output signals:	**Trip:**
BFP--TRBU	Back-up trip
BFP--TRRETL1	Trip breaker-failure phase L1
BFP--TRRETL2	Trip breaker-failure phase L2
BFP--TRRETL3	Trip breaker-failure phase L3
BFP--TRRET	Three-phase trip

2.2 Start functions

The breaker-failure protection can be started either internally or externally. The start pulse is sealed-in as long as the current exceeds the preset current level, to prevent a restart of the BFP timers in case of a chattering starting contact. The preset current level may be set to (0,05 - 2,0) · Ir where Ir is 1 or 5 A.

2.3 Measuring principles

The current is filtered through a specially designed high-pass filter to obtain the required suppression of the dc components.

High-pass filtering is performed basically for two reasons i.e to remove the:

- dc component caused by saturated current transformers with a decaying current due to de-energizing of the secondary circuit. This is done to achieve a more correct representation of the real current in the line.
- dc component that is a part of the fault current. This is done to achieve a correct base for both ASD and RMS calculations.

The frequency limit of the filter is very close to the service frequency, to obtain a maximum suppression of the above dc components.

The intention of the adaptive signal detection (ASD) concept is to achieve independence from the absolute filtering requirement, when dealing with extremely high fault currents in combination with low preset values. This is obtained by creating a new stabilizing signal to compare the current with.

The ASD works continuously, regardless of if the BFP was started. Its result is however considered only when the BFP has started and the pre-set time has elapsed.

As the current exceeds the previously stabilized sample, it adapts the value of the current and when it does not, it decays. This adaptive behaviour makes it possible to rapidly and securely detect a breaker failure situation after the pre-set time has elapsed.

Continuously and in parallel, the RMS value of the post-filtered signal is calculated and compared with a preset current level. As the RMS value decreases below the preset current level, the breaker-failure function is momentarily reset.

At normal operation of the circuit breaker, the stabilizing signal exceeds the post-filtered signal for a consecutive period of maximum 10 ms before it is reset. Resetting occurs before the back-up trip timer t2 has timed out.

At a breaker failure situation, the post-filtered current exceeds the stabilizing signal, resulting in a trip of the breaker-failure function within 10 ms after the trip timer t2 has elapsed.

The breaker-failure protection works with all three phases totally separated. But a possibility exists to start all three phases simultaneously.
The back-up trip is always three-phase

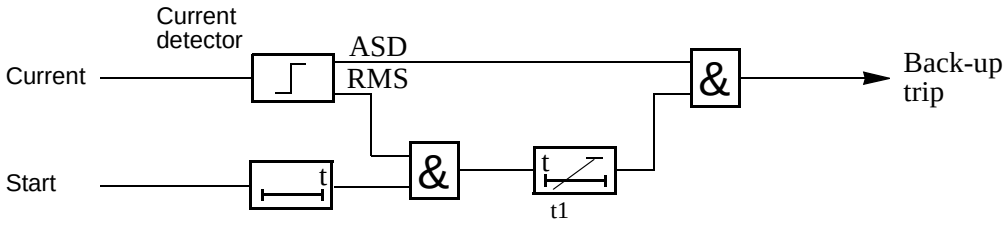

Figure 5: Breaker-failure protection

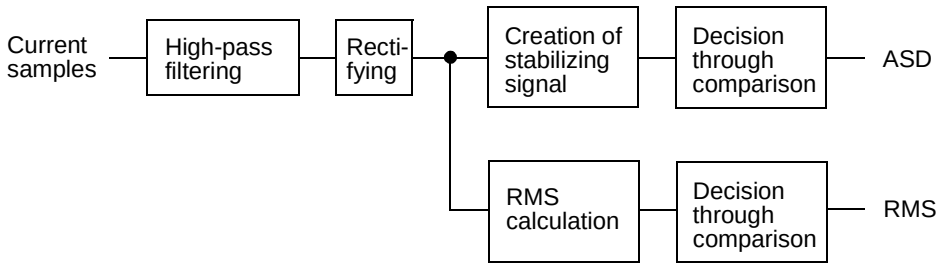

Figure 6: Current detector, ASD and RMS measurement

2.4 Retrip functions

The retrip function of the original circuit breaker is set at one of three options:

Setting:	**The retrip...**
Off	function is not executed.
I> check	occurs with a current check.
No I> check	occurs without a current check.

The retrip timer t1 can be set from 0 to 60 s.

A trip pulse, tp, is generated with a length of 150 ms.

2.5 Back-up trip

The back-up trip delay timer t2 can be set between 0 and 60 s.

A trip pulse, tp, is generated with a length of 150 ms.

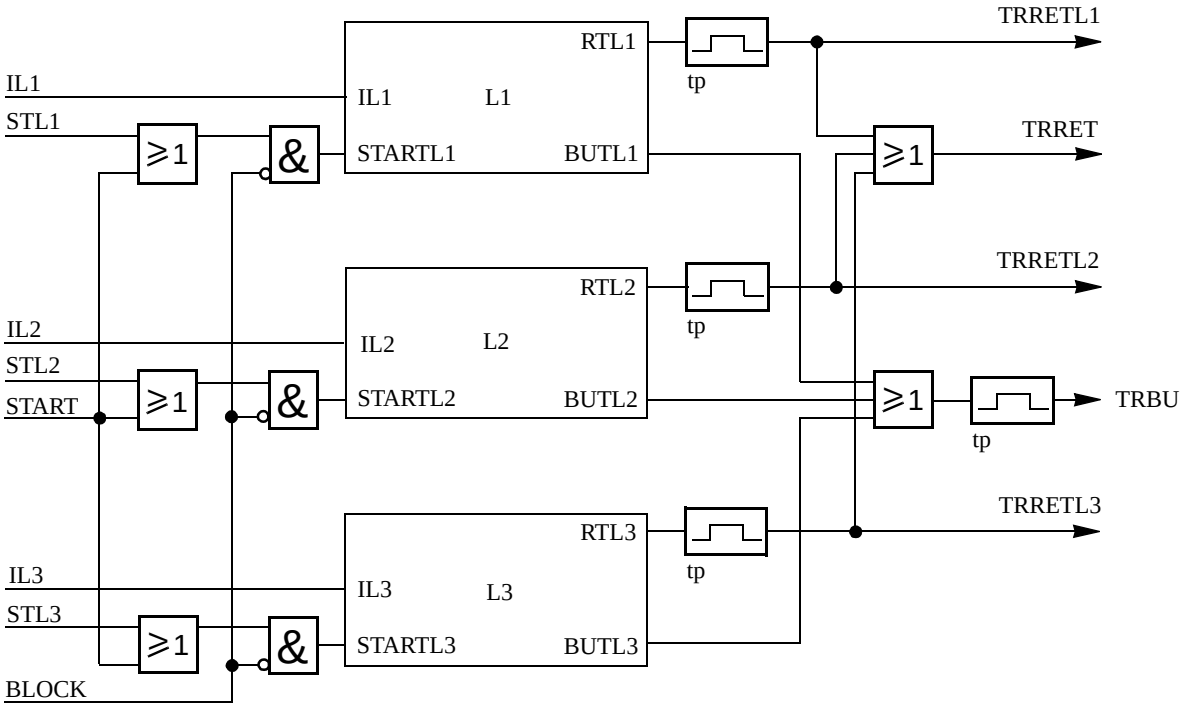

Figure 7: Breaker-failure protection

3 Setting

3.1 Human-machine interface (HMI)

The configuration of alternatives or settings to the functions is made on the built-in HMI:

Settings
Functions
Group n
Breaker Failure

The breaker-failure protection can be controlled from the human-machine interface (HMI) by an “Operation” parameter, to be set between alternatives Off/On.

When “Operation” is set to Off, the function becomes inoperative.

The configuration of input and output signals to the function is made on the built-in HMI:

Configuration
Function Inputs
Breaker Failure

The inputs and the outputs to and from the breaker-failure protection are presented in the signal list.

Fixed values

Trip pulse, tp	150 ms, fixed

4 Testing

The function can be disabled during the testing mode under these conditions:

- When the function is selected to be blocked under the testing conditions, select the functions, which should be blocked under the submenu:

  Test
  TestMode
  BlockFunctions

- Set the Operation parameter to On (Operation = On) to set the terminal in to testing mode. Select the operating mode under this submenu:

  Test
  TestMode
  Operation

- The terminal is switched to testing mode when the logical 1 is specified for the TEST-INPUT functional input.

Note: The function is blocked if the corresponding setting under the **BlockFunctions** submenu remains On and the TEST-INPUT signal remains active.

5 Test of the breaker-failure protection

The breaker-failure protection can be tested, for example at commissioning or after a changed configuration, in co-operation with some other functions, and in particular with the protection and trip functions.

The trip circuits to the breakers are opened at a test switch or at connection terminals with links. A secondary injection relay test is used to operate the protection function.

Suggested testing procedure:

5.1 Preparations

1.1 Check the settings and the alternatives of the breaker-failure protection (BFP).

The operation can be set to Stand-by (Off)

HMI submenu:

Settings
Functions
Group n
Breaker Failure

If the settings are changed to speed up times during the tests, they must later be reset and verified.

5.2 Check that the protection does not trip when set passive

2.1 Set operation = Off.
2.2 Apply a stationary current over the set value.
2.3 Apply a start pulse to BFP--STL1.
2.4 Verify that neither retrip nor back-up trip is achieved.

5.3 Check that the protection can be started from all start inputs

3.1 Set RetripType = No I>check, I> = 100% I_r and t1 = 50 ms.
3.2 Apply a stationary three-phase current over the set value.
3.3 Apply a start pulse to BFP--STL1.
3.4 Verify that retrip in phase L1 is achieved.
3.5 Apply a stationary current over the set value.
3.6 Apply a start pulse to BFP--START
3.7 Verify that all three retrips are achieved.

5.4 Check that the retrip function works

4.1 No retrip function

4.1.1 Set RetripType = Retrip Off and I> = 100% I_r.
4.1.2 Apply a stationary three-phase current over the set value.
4.1.3 Apply a start pulse to BFP--STL1.
4.1.4 Verify that retrip in phase L1 is not achieved.

4.2 Retrip function with current check

4.2.1 Set RetripType = I> check, t1 = 100 ms and I> = 100% I_r.
4.2.2 Apply a stationary three-phase current over the set value.
4.2.3 Apply a start pulse to BFP--STL1.
4.2.4 Verify that retrip is achieved.

4.3 Retrip function without current check

4.3.1 Set RetripType = No I> check, t1 = 100 ms and I> = 100% I_r.
4.3.2 Apply a stationary three-phase current over the set value.
4.3.3 Apply a start pulse to BFP--STL1.
4.3.4 Verify that retrip is achieved.

5.5 Check that the back-up trip function works

5.1 Set RetripType = Retrip Off, t2 = 200 ms and I> = 100% I_r.

5.2 Apply a stationary three-phase current over the set value.

5.3 Apply a start pulse to BFP--STL1.

5.4 Verify that back-up trip is achieved.

5.6 Terminate the test and restore the equipment to normal state

After the tests, restore the equipment to the normal or desired alternatives and settings!

Check especially that the:

- Setting parameters reset as required and that a verification test is made.
- Test switches or disconnected links of the connection terminals.
- Normal indications. (If preferred, the disturbance report can be cleared.)

6 Appendix

6.1 Function block

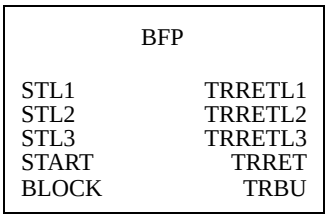

Figure 8: Simplified terminal diagram of the function

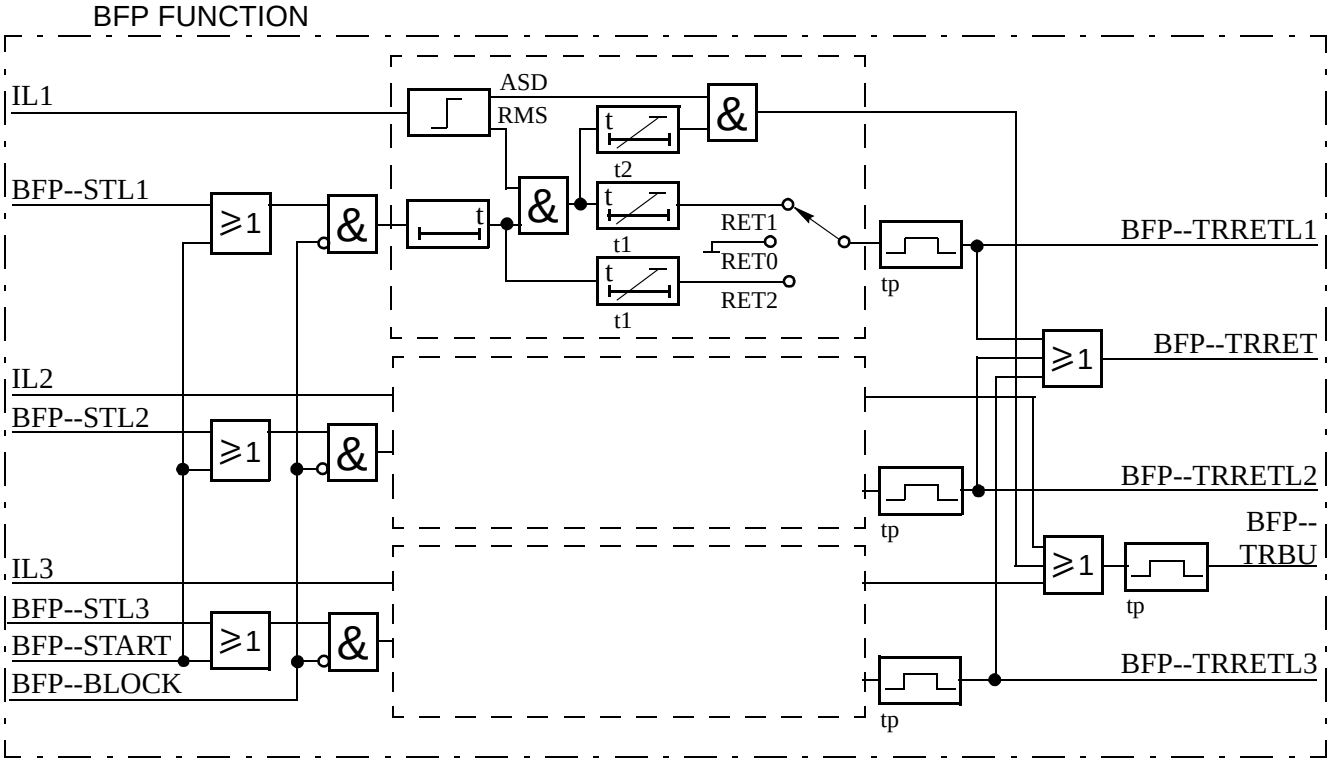

Figure 9: Terminal diagrams for the function

6.2 Signal list

Block	Signal	Type	Description
BFP--	BLOCK	IN	Block of breaker-failure function
BFP--	START	IN	Start of breaker-failure function
BFP--	STL1	IN	Start of breaker-failure function phase L1
BFP--	STL2	IN	Start of breaker-failure function phase L2
BFP--	STL3	IN	Start of breaker-failure function phase L3
BFP--	TRBU	OUT	Backup trip by breaker-failure function
BFP--	TRRET	OUT	Retrip by breaker-failure function
BFP--	TRRETL1	OUT	Retrip by breaker-failure function phase L1
BFP--	TRRETL2	OUT	Retrip by breaker-failure function phase L2
BFP--	TRRETL3	OUT	Retrip by breaker-failure function phase L3

6.3 Setting table

Parameter	Range	Unit	Default	Parameter description
Operation	Off, On		Off	Breaker failure function On/Off
IPgr	5-200	%	100	Operating phase current, as a percentage of I1b
t2	0.000-60.000	s	0.200	Delay timer for backup trip
RetripType	Retrip Off, I> Check, No I> Check		Retrip Off	Select type of retrip logic
t1	0.000-60.000	s	0.050	Delay timer for retrip

1 Application

The conventional distance protection can manage the fault clearance of earth-fault in most of the cases. But in some applications, especially applications with long lines, the clearance can be improved by use of an instantaneous earth-fault protection. Those are for instance:

- In the case of high infeed of fault current from the opposite end of the line, this might increase the fault resistance seen by the distance relay to such a value that the instantaneous step will not operate.
- In applications with series compensated lines, where the capacitor is located at the end of the line and very strong infeed of fault current from that end, will result in a difficult problem for the distance protection to perform a selective fault clearance. This due to the voltage reversal that might occur.

The use of instantaneous overcurrent earth-fault protection is most suitable for long lines in meshed transmission systems. It can also be used for radial lines with low fault current infeed from the opposite end of the line.

The instantaneous, non-directional, earth-fault overcurrent protection (IOC), which can operate in 15 ms (50 Hz nominal system frequency) for faults characterized by very high currents, is included in some of the REx 5xx terminals. Refer to the ordering information for more details.

2 Theory of operation

The measuring technics is based on measuring of the incoming residual current to the terminal.

The current-measuring elements within one of the built-in digital signal processors continuously measure the zero sequence current, and compare them with the *IN*>> set value. A recursive Fourier filter filters the current signals, and a separate trip counter prevents high overreaching of the measuring elements. The logical value of the signal on the output of the digital signal processor (IOC--STIN) is equal to 1 if the measured zero sequence current exceeds the pre-set value.

3 Design

The simplified logic diagram of the instantaneous phase overcurrent function is shown in Figure 1:.

The overcurrent function is disabled if:

- The terminal is in TEST status (TEST-ACTIVE is high) and the function has been blocked from the HMI (BlockIOC=Yes)
- The input signal IOC--BLOCK is high.

The IOC--BLOCK signal is a blocking signal of the overcurrent function. It can be connected to a binary input in order to receive a block command from external devices or it can be configured (software connection) to other internal functions within the terminal itself, in order to receive a block command from internal functions. Through OR gates it can be connected to both binary inputs and internal function outputs.

When the overcurrent function is enabled, the output tripping signals IOC--TRN and IOC--TRIP can operate. The duration of each output signal is at least 15 ms. This enables continuous output signals for currents, which go just beyond the set operating value.

The IOC--TRN signal is related to the residual overcurrent trip.

The IOC--TRIP output signal behaves as general instantaneous overcurrent trip when in the REx 5xx terminal also the instantaneous phase overcurrent function is implemented. I.e. this signal will be activated in case of residual overcurrent detection or in case of any single-phase overcurrent detection (IOC--STIL_: IOC--STIL1 or IOC--STIL2 or IOC--STIL3). If only the residual overcurrent function is implemented in the terminal, then this signal behaves exactly as the signal IOC--TRN and can be used for signalising.

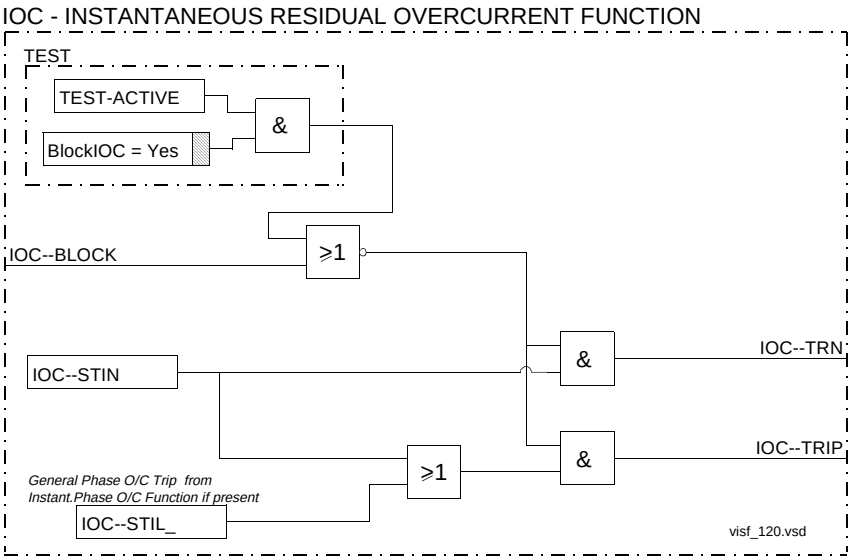

Figure 1: Simplified logic diagram of instantaneous residual overcurrent protection.

4 Setting

The residual overcurrent protection is very sensitive to the change of zero source impedance. Since it must operate only in a selective way, it is necessary to check all system and transient conditions that can cause unwanted operation.

Only detailed network studies can determine the operating conditions under which the highest possible fault current is expected on the line. In most cases, this current appears during single-phase fault conditions. But also examine two-phase-to-earth conditions, since this type of fault can be higher than single-phase to earth fault in some cases.

Also study transients that can cause a high increase of the line current for short times. A typical example is a transmission line with a power transformer at the remote end, which can cause high inrush current when connected to the network and can thus also cause the operation of the built-in, instantaneous, earth-fault protection.

4.1 Meshed network without parallel line

The following fault calculations have to be done for single-phase-to-earth and two-phase-to-earth faults. With reference to Figure 2:, apply a fault in B and then calculate the relay through fault residual current I_{fB}. The calculation should be done using the minimum source impedance values for Z_A and the maximum source impedance values for Z_B in order to get the maximum through fault current from A to B.

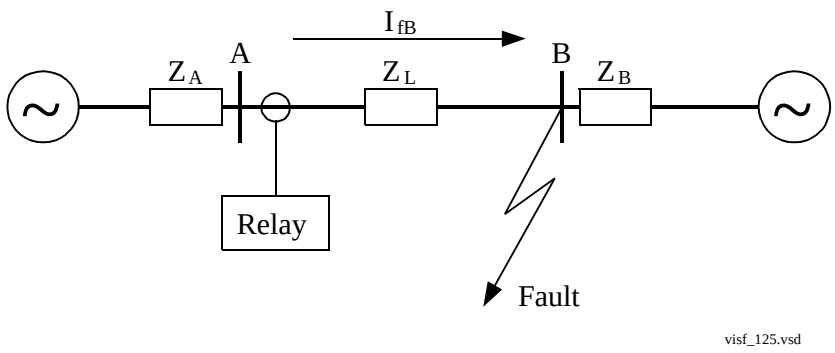

Figure 2: Through fault current from A to B: I_{fB}.

Then a fault in A has to be applied and the through fault I_{fA} has to be calculated (Figure 3:). In order to get the maximum through fault current, the minimum value for Z_B and the maximum value for Z_A have to be considered.

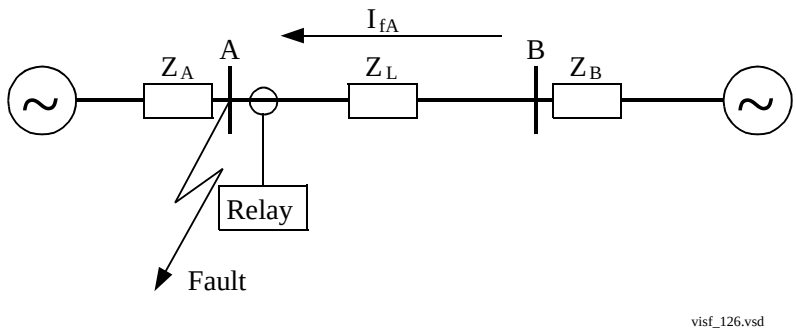

Figure 3: Through fault current from B to A: I_{fA}.

The relay must not trip for any of the two trough fault currents. Hence the minimum theoretical current setting (*Imin*) will be:

$$Imin \geq MAX(I_{fA}, I_{fA}) \quad \text{(Equation 1)}$$

A safety margin of 5% for the maximum protection static inaccuracy and a safety margin of 5% for the maximum possible transient overreach have to be introduced. An additional 15% is suggested due to the inaccuracy of the instrument transformers under transient conditions and inaccuracy in the system data.

The minimum setting (*Is*) for the instantaneous phase overcurrent protection is then:

$$Is \geq 1,3 \cdot Imin \quad \text{(Equation 2)}$$

The protection function can be used for the specific application only if this setting value is equal or less than the maximum fault current that the relay has to clear (I_F in Figure 4:).

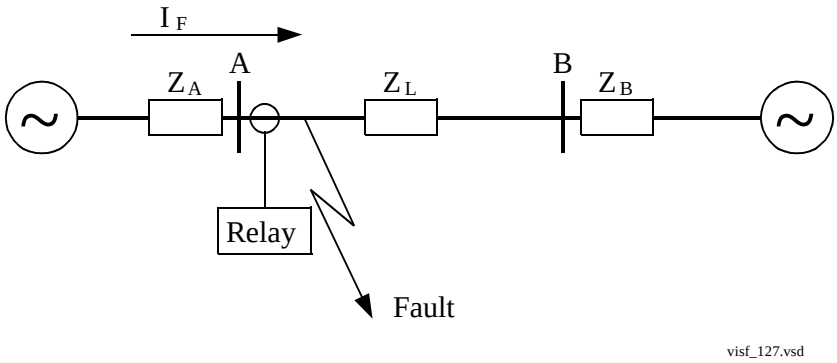

Figure 4: Fault current: I_F.

The current transformer secondary setting current (Is_{SEC}) is:

$$Is_{SEC} = \frac{I_{SEC}}{I_{PRIM}} \cdot Is \quad \text{(Equation 3)}$$

Set this value under the setting menu:

Settings
Functions
Group*n*
InstantOC

Note: *n*=1,2,3 or 4, depending on which group to set.

4.2 Meshed network with parallel line

In case of parallel lines, the influence of the induced current from the parallel line to the protected line has to be considered. One example is given in Figure 5:, where the two lines are connected to the same busbar. In this case the influence of the induced fault current from the faulty line (line 1) to the healthy line (line 2) is considered together with the two through fault currents I_{fA} and I_{fB} mentioned previously. The maximal influence from the parallel line for the relay in Figure 5: will be with a fault at the C point with the C breaker open.

A fault in C has to be applied, and then the maximum current seen from the relay (I_M) on the healthy line (this applies for single-phase-to-earth and two-phase-to-earth faults) is calculated. The through fault current I_M is the sum of the induced fault current from line 1 and the fault current that would occur in line 2 if the mutual impedance M would be zero.

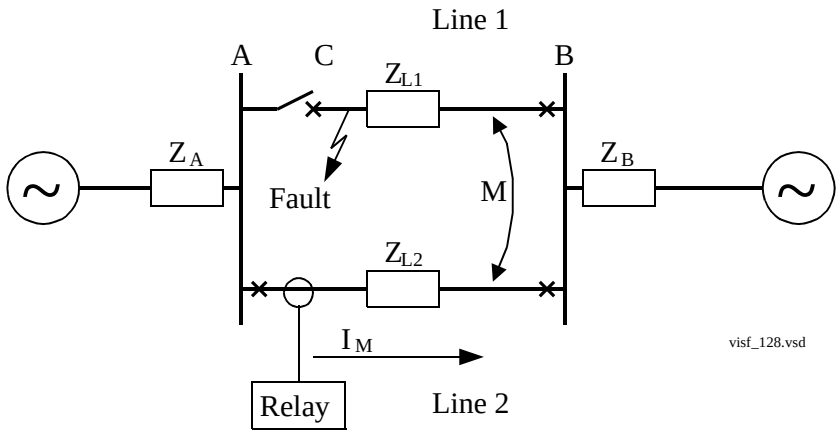

Figure 5: Two parallel lines. Influence from parallel line to the through fault current: I_M.

The minimum theoretical current setting for the overcurrent protection function (*Imin*) will be:

$$Imin \geq MAX(I_{fA}, I_{fB}, I_M) \quad \text{(Equation 4)}$$

where I_{fA} and I_{fB} have been described in the previous paragraph. Considering the safety margins mentioned previously, the minimum setting (*Is*) for the instantaneous phase overcurrent protection is then:

$$Is \geq 1,3 \cdot Imin \quad \text{(Equation 5)}$$

The protection function can be used for the specific application only if this setting value is equal or less than the maximum residual fault current that the relay has to clear.

The current transformer secondary setting current (Is_{SEC}) is:

$$Is_{SEC} = \frac{I_{SEC}}{I_{PRIM}} \cdot Is \qquad \text{(Equation 6)}$$

Set this value under the setting menu:

Settings
Functions
Group*n*
InstantOC

Note: *n*=1,2,3 or 4, depending on which group to set.

5 Testing

The function can be disabled during the test at these conditions:

- When the function should be blocked under the testing conditions, select the functions that should be blocked under the menu:

  Test
  TestMode
  BlockFunctions

- The terminal is set to test mode by setting the *Operation=On*, which occurs under the menu:

  Test
  TestMode
  Operation

- The terminal is automatically set to test mode by applying a logical 1 to the TEST-INPUT functional input.

Important!! The function is blocked if the corresponding setting under the BlockFunctions menu remains on and the TEST-INPUT signal remains active.

The instantaneous residual overcurrent function must not be blocked in order to be tested.

Check the operating values of the current measuring elements and corresponding functions during the commissioning and during regular maintenance tests. ABB Network Partner recommends, but not requested, the use of the RTS 21 FREJA testing equipment for secondary injection-testing purposes.

Before testing, connect the testing equipment according to the valid terminal diagram of the specific REx 5xx terminal. Pay special attention to the correct connection of the input and output current terminals, and to the connection of the residual current.

Follow these steps:

1. Configure input and output logical signals for testing

Signals are shown in figure 1 on page 66.

2. Set the residual overcurrent trip value IN>>

3. Set the IOC--BLOCK signal to logical zero

4. Set the operation of the IOC protection to On mode

Check that the IOC--TRN signal is zero.

The signal is checked from the local HMI. Values of the logical signals belonging to the instantaneous overcurrent protection are available under the menu tree at:

ServiceReport
Functions
InstantOC
FuncOutput

5. Connect one current input of the terminal to the testing equipment.

6. Inject a phase current in the terminal

The value of the phase current should be below the setting value.

7. Slowly increase the amplitude of the injected current

Continue to slowly increase the current until the IOC--TRN signal appears. Record the current value at which the signal operates (measured operate current).

Note! During this phase, do not exceed the maximum permitted overloading of the current circuits in the terminal.

8. Switch off the injected current

Compare the measured operate current with the set value.

The result should be within a 5% accuracy limit, with the addition of the accuracy class of the testing equipment.

9. Set the injected fault current

The value of the injected fault current should be set to about 1.5 times the measured operate current.

10. Inject the fault current

By injecting the fault current, the timer for measuring the operate time must be started. Measure the operate time of the IOC protection. Use the IOC--TRN signal from the configured binary output to stop the timer.

11. Switch off the injected current

12. Block the IOC function

Blocking is achieved by connecting a (rated) dc voltage to the IOC--BLOCK configured binary input.

13. Inject the fault current

No IOC--TRN signal should appear.

14. Switch off the injected fault current

15. Unblock the IOC function

16. Disconnect the dc voltage from the IOC--BLOCK binary input.

17. Set the operation of the protection at Off mode

18. Inject the fault current

No corresponding binary signals should appear on the terminal.

19. Configure the terminal for normal operation.

6 Appendix

6.1 Function block

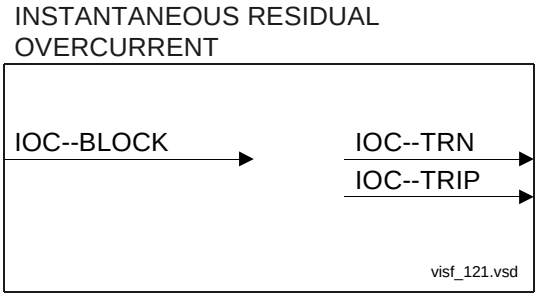

6.2 Function block diagram

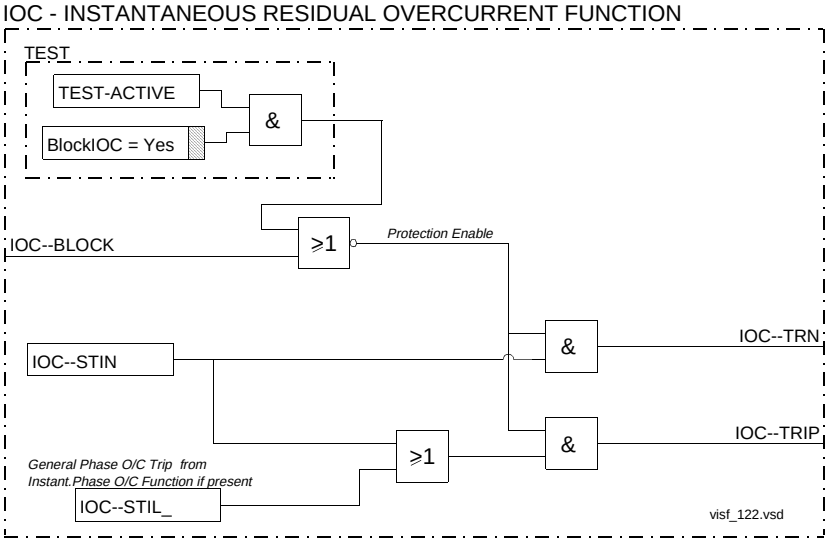

6.3 Signal list

Block	Signal	Type	Description
IOC--	BLOCK	IN	Block of the instantaneous overcurrent protection function
IOC--	TRN	OUT	Trip by the instantaneous residual overcurrent protection
IOC--	TRIP	OUT	Trip by instantaneous overcurrent protection

6.4 Setting table

Parameter	Range	Unit	Default	Parameter description
Operation	Off, On		Off	Instantaneous overcurrent function Off/On
IN>>	50-2000	%	100	Operating neutral current, as percentage of I1b

1 Application

The time delayed residual overcurrent protection (TOC) which is an earth-fault protection, serves as a built-in local back-up function to the main protection function. In most cases, it is used as a back-up for the earth-fault measuring in distance protection.

The function is intended to be used in solidly earthed systems.

The time delay makes it possible to set the relay to detect high resistance faults and still perform selective trip.

The protection, which is non-directional, is included in some of the REx 5xx terminals. Refer to the ordering information for more details.

2 Theory of operation

The current-measuring elements within one of the built-in digital signal processors continuously measure the residual current (3I0), and compare it with the *IN*> set value. A recursive Fourier filter filters the current signals, and a separate trip counter prevents high overreaching of the measuring elements. The logical value of the signal on the output of the digital signal processor (TOC--STIN) is equal to 1 if the measured residual current exceeds the pre-set value. This signal will instantaneously set the output start signal (TOC--STN), unless the function is blocked (look further under “Design” on page 75).

The function trip signal (TOC--TRN) can be delayed from 0-60 s.

If the residual current exceeds the set value for a period longer than the set value, then a three phase trip is generated from the output signal TOC--TRN.

3 Design

The simplified logic diagram of the time delayed earth-fault protection is shown in Figure 1:.

The time delayed residual function is disabled if:

- The terminal is in TEST status (TEST-ACTIVE is high) and the function has been blocked from the HMI (BlockTOC=Yes).
- The input signal TOC--BLOCK is high.

The TOC--BLOCK signal is a blocking signal of the earth-fault function. It blocks the whole function and prevents the changing of the activation of any trip or starting output signals.

It can be connected to a binary input in order to receive a block command from external devices or it can be configured (software connection) to other internal functions within the terminal itself, in order to receive a block command from internal functions. Through OR gates it can be connected to both binary inputs and internal function outputs.

When the E/F protection is enabled, there is still a possibility to block the trip output only, without affecting the start signals, which always will be active. The input which provides this function is TOC--BLKTR. The duration of each output signal is at least 15 ms. This enables continuous output signals for currents, which go just a little beyond the set operating value.

The TOC--TRN signal is related to the residual overcurrent trip.

The TOC--TRIP output signal behaves as general time delayed overcurrent trip when in the REx 5xx terminal also the time delayed phase overcurrent function is implemented. I.e. this signal will be activated in case of delayed residual overcurrent trip or in case of time delayed phase overcurrent trip (TOC-TRP). If only the residual overcurrent function is implemented in the terminal, then this signal behaves exactly as the signal TOC--TRN and can be used for signalising.

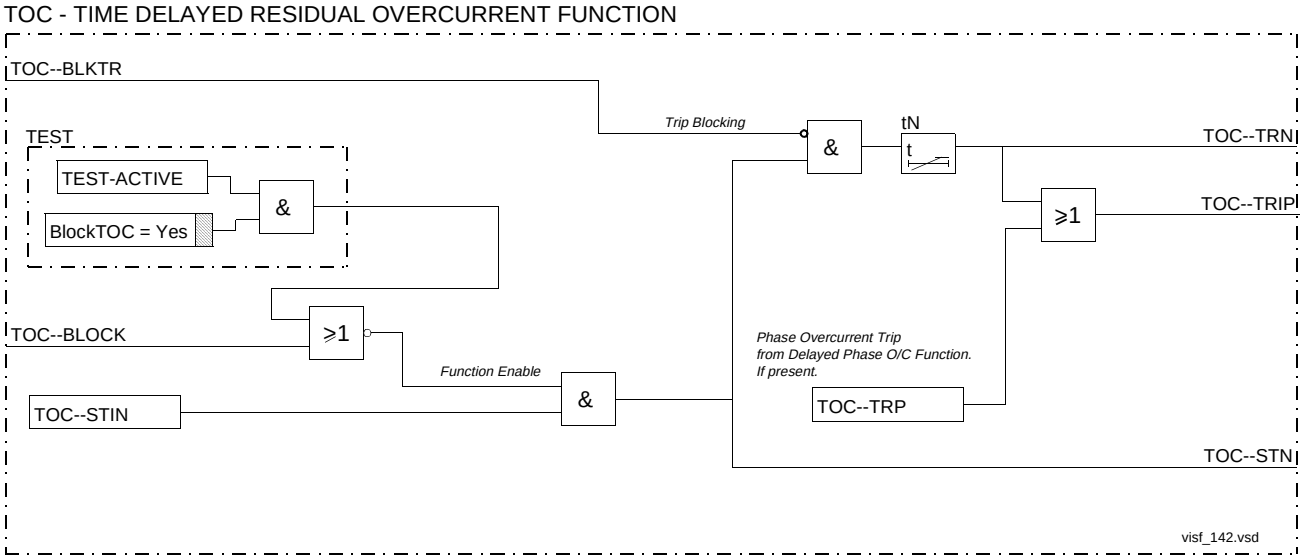

Figure 1: Simplified logic diagram of the TOC-- protection function.

4 Settings

The residual overcurrent protection is very sensitive to the change of zero source impedance. Since it must operate only in a selective way, it is necessary to check all system and transient conditions that can cause unwanted operation.

The settings should be chosen in such a way that it can detect high resistance faults on the protected line and still be selective to other residual time delayed protections in both forward and reverse directions. The time setting value should also consider transients that can cause a high increase of the residual line current for short times.

A typical example is a transmission line with a power transformer at the remote end, which can cause high inrush current when being energised.

In well transposed system, the false earth-fault current is normally lower than 5% of the line current, except for extremely short parallel lines (less than 5 km), where a higher false residual current may be found.

In case of extremely short or not fully transposed parallel lines, the false residual current must be measured or calculated when maximum sensitivity is desired. Generally, 80 A is recommended as a minimum primary operation value for the residual overcurrent protection.

General criteria for the primary current setting value of the time delayed residual overcurrent protection is given in the formula below:

$$1.3 \cdot IRmax < Is < 0.7 \cdot IFmin \quad \text{(Equation 1)}$$

where $IRmax$ is the maximum permissive residual current flowing in the protection unit during normal service conditions, $IFmin$ is the minimum residual fault current that the relay has to clear. The values 1.3 and 0.7 are safety factors.

4.1 Setting of operating current IN>

If *Is* is the primary setting operating value of the function, then the secondary setting current (Is_{SEC}) is:

$$Is_{SEC} = \frac{I_{SEC}}{I_{PRIM}} \cdot Is \quad \text{(Equation 2)}$$

where I_{SEC} is the secondary rated current of the main CT and I_{PRIM} is the primary rated current of the main CT.

The relay setting value *IN>* is given in percentage of the secondary base current value, I_{4b}, associated to the current transformer on input I4. The value for *IN>* is given from the formula:

$$IN> = \frac{Is_{SEC}}{I_{4b}} \cdot 100 \quad \text{(Equation 3)}$$

and this is the value that has to be set in the relay.

Set the value under the setting menu:

Settings
Functions
Group n (n=1-4)
TimeDelayOC

for the parameter *IN>*.

4.2 Setting of time delay tN

Set the time delay of the function, *tN*, under the setting menu:

Settings
Functions
Group n (n=1-4)
TimeDelayOC

5 Testing

The function can be disabled during the test at these conditions:

- First, select the function which should be blocked, under the sub-menu:

  Test
  TestMode
  BlockFunctions

Then, there are two ways of setting the terminal into test mode, both operative separately or together:

- Set the terminal into operational test mode by setting the value of the parameter *Operation=On*. Select the operating mode under the sub-menu:

  Test
  TestMode
  Operation

- The terminal is automatically set to test mode by applying a logical 1 to the TEST-INPUT functional input.

Note! The function is blocked if the corresponding setting under the BlockFunctions menu remains on and the TEST-INPUT signal remains active.

The residual overcurrent function must not have to be blocked in order to be tested.

Check the operating values of the current measuring elements and corresponding functions during the commissioning and during regular maintenance tests. ABB Network Partner recommends, but not requested, the use of the RTS 21 FREJA testing equipment for secondary injection-testing purposes.

Before testing, connect the testing equipment according to the valid terminal diagram of the specific REx 5xx terminal. Pay special attention to the correct connection of the input and output current terminals, and to the connection of the residual current.

Follow these steps:

1.1 Check if the input and output logical signals in Figure 1: are configured to the corresponding binary inputs and outputs of the tested terminal. If not, configure them for testing purposes. Set the operation of the TOC protection to *On* mode.

1.2 Set the input logical signals to logical zero and note on the local HMI that the TOC--TRN logical signal is equal to logical 0. Values of the logical signals belonging to the time delayed residual overcurrent protection are available under menu tree:

ServiceReport
Functions
TimeDelayOC
FuncOutput

1.3 Set the time delay *tN* to 300 ms.

1.4 Quickly increase the injected residual current (measured current) at terminal IN until the TOC--TRN signal appears. Record the operating value. Decrease the measured current to zero (observe the maximum permitted overloading of the current circuits in the terminal). Compare the measured operating current with the set value. The result should be within the 5% accuracy limits with the addition of the accuracy class of the testing equipment.

1.5 Quickly set the measured current to about 1.5 times the measured operating current, and disconnect the current with the switch.

1.6 Switch on the fault current and measure the operating time of the TOC protection. Use the TOC--TRN signal from the configured binary output to stop the timer. The operating time should be 300 ms $^{+}$/-11.5 ms (for the 50 Hz nominal frequency).

1.7 Connect the rated D.C voltage to the TOC--BLKTR configured binary input, and switch on the fault current. No TOC--TRN should appear, but TOC--STN signal will be triggered. Switch off the fault current and disconnect the dc voltage from the TOC--BLKTR binary input.

1.8 Set the operation of the protection at *Off* mode and switch on the fault current. Note that no corresponding binary signals should appear on the terminal. Switch off the fault current.

1.9 Configure the terminal to its normal operating configuration.

6 Appendix

6.1 Function block

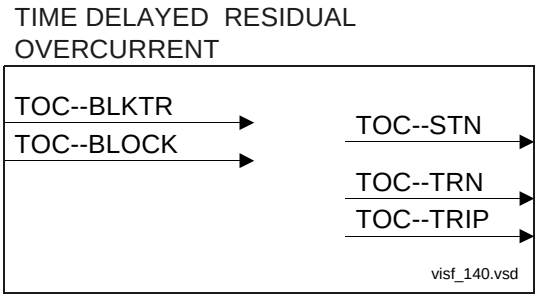

6.2 Function block diagram

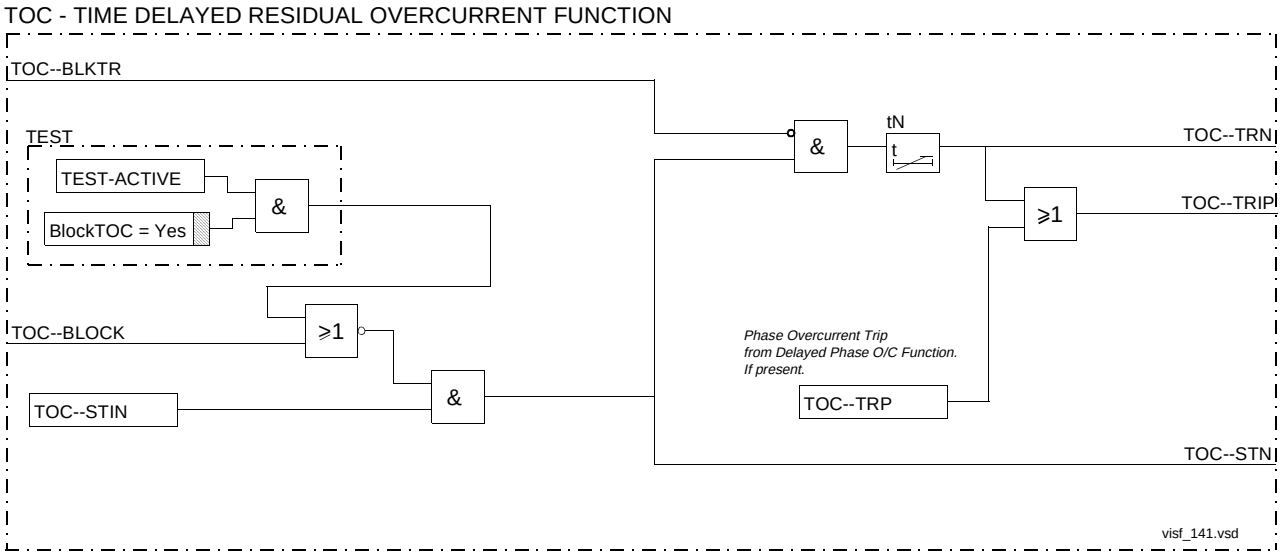

6.3 Signal list

Block	Signal	Type	Description
TOC--	BLOCK	IN	Block of time delayed residual overcurrent function
TOC--	BLKTR	IN	Block of trip from time delayed residual overcurrent function
TOC--	TRIP	OUT	Trip output from the time delayed residual overcurrent protection
TOC--	TRN	OUT	Trip by the time delayed residual overcurrent protection
TOC--	STN	OUT	Start of the time delayed residual overcurrent protection

6.4 Setting table

Parameter	Range	Unit	Default	Parameter description
Operation	Off, On		Off	Time delayed residual overcurrent protection function On/Off
IN>	10-150	%	100	Operating neutral current, as percentage of Ib
tN	0.000-60.000	s	10.000	Time delay of neutral current function

1 Application

This earth-fault overcurrent protection is intended for solidly earthed networks.

1.1 Earth-fault overcurrent protection

In case of single-phase earth-faults, the primary fault resistance varies with the network conditions and location of the fault. In many cases, the fault resistance is much higher than the resistance that can be covered by an impedance-measuring distance relay.

Earth-faults with high fault resistances can be detected by measuring the residual current ($3I_0$). Directional earth-fault protection is obtained by measuring the residual current and the angle between this current and the zero-sequence voltage ($3U_0$).

The $3I_0$ current lags the polarising voltage ($3U_0$) by a phase angle equal to the angle of the zero-sequence source impedance. In solidly earthed networks, this angle is in the range of 40° to nearly 90°. The high value refers to stations with direct earthed transformers with delta winding. To obtain maximum sensitivity at all conditions, the forward measuring element must have a characteristic angle of 65°.

As a general rule, it is easier to obtain selectivity by using directional instead of non-directional earth-fault overcurrent protection, but sufficient polarising voltage must be available.

It is not possible to measure the distance to the fault by using the zero-sequence components of the current and voltage, because the zero-sequence voltage is a product of the zero-sequence components of current and source impedance. So it is necessary to obtain selectivity by directional comparison which uses communication between the line ends.

The best selectivity is generally obtained by using inverse time delay. All relays must have the same type of inverse characteristic. An earth-fault in a line is selectively tripped if the difference between the residual in the line and the residual current ($3I_0$) in the other lines give a time difference of 0.3-0.4 seconds. A logarithmic characteristic is generally the most suitable for this purpose, because the time difference is constant for a given ratio between the currents. See Figure 2:.

The earth-fault overcurrent protection module for the REx 5xx terminal has four different inverse time characteristics.

Table 1: Inverse time characteristics

Normal inverse (NI)	according to IEC 255-3
Very inverse (VI)	according to IEC 255-3
Extremely inverse (EI)	according to IEC 255-3
Logarithmic inverse (IDG)	according to the formula: $t = 5{,}8\text{-}1{,}35 \cdot \ln I / I_a$ (s) where I_a is the set characteristic value ($3I_0$>)

The inrush current can cause unwanted tripping of the earth-fault overcurrent relay when energising a directly earthed power transformer. The earth-fault overcurrent protection is therefore provided with second harmonic restraint, which blocks the operation if the residual current ($3I_0$) contains 20% or more of the second harmonic component.

In some cases, it is possible to improve the selectivity by adding a settable minimum operate current (IMin) and a minimum operate time (tMin) to the inverse characteristic. These functions are included in the earth-fault protection modules.

Due to its sensitivity, the residual overcurrent protection can detect serial faults. A serial fault can be caused by broken phase conductor(s) with no contact to earth, or pole discrepancy in a circuit breaker or a disconnector. The most common type of serial fault is pole discrepancy at breaker maneuvers. To minimise the operate time, the residual overcurrent protection module is provided with a switch-onto-fault logic, which can be activated at breaker closure. The tripping time will temporarily be reduced to 300 ms.

1.2 Directional comparison logic function

In the directional comparison scheme, information of the fault current direction must be transmitted to the other line end. A short operate time enables auto-reclosing after the fault. During a single-phase reclosing cycle, the auto-reclosing device must block the directional comparison earth-fault scheme.

A communication logic block for residual overcurrent protection can be included in the REx 5xx terminal to provide this feature. The function contains circuits for blocking overreach and permissive overreach schemes. See the section “*Communication logic for residual overcurrent protection*”.

Also an additional communication logic block for the communication can be included. It contains logic for the weak-end-infeed and current-reversal functions, which are used only in the permissive overreach scheme. See the section “*Current reversal and weak end infeed logic for residual overcurrent protection.*

2 Theory of operation

2.1 Directional earth-fault overcurrent protection

This protection measures the residual current ($3I_0$) and the residual voltage ($3U_0$). Figure 1: shows the current measuring, time delay and logic circuits (both with and without directional check) of this protection function.

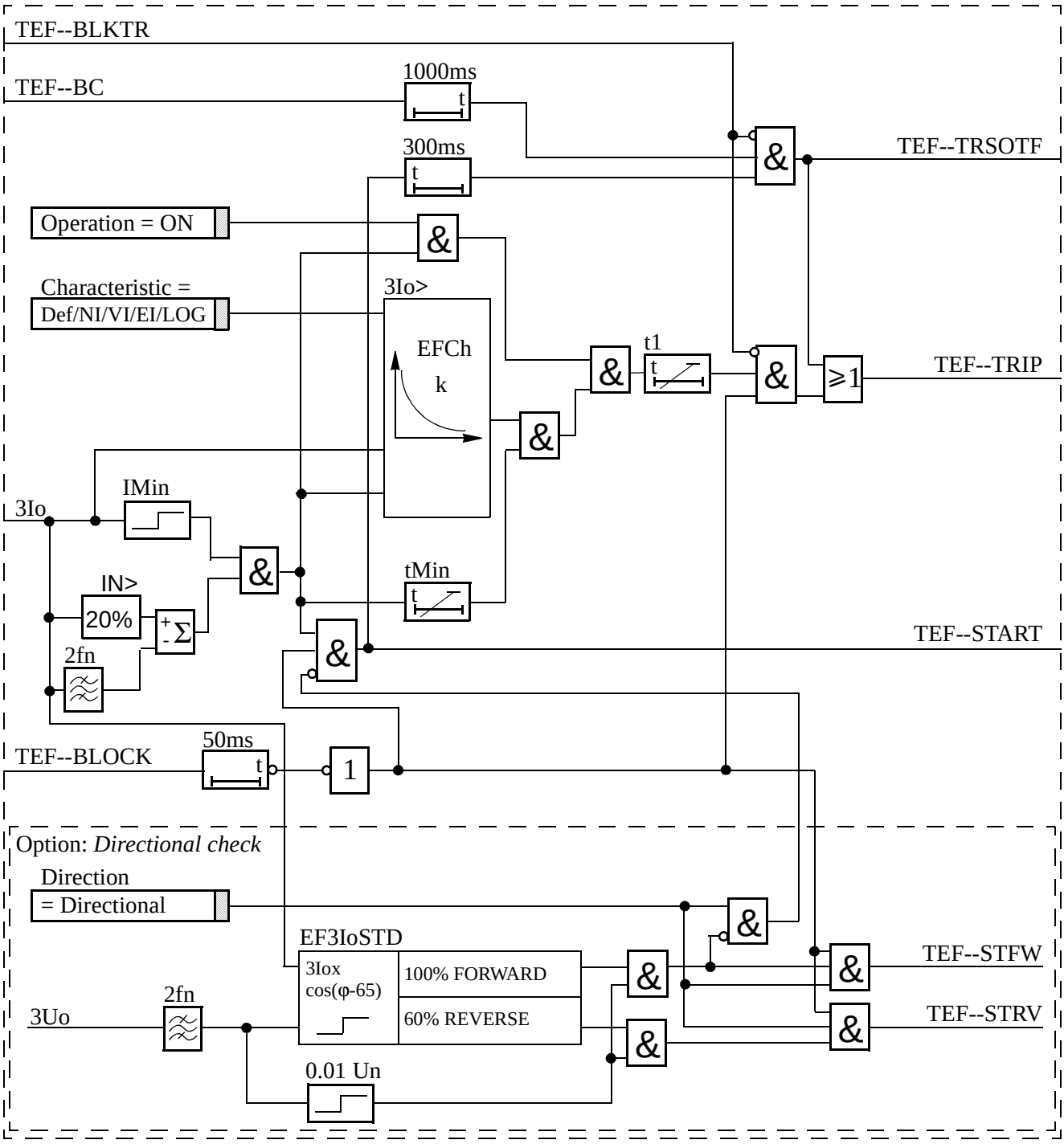

Figure 1: Simplified logic diagram for the residual overcurrent protection.

The $3I_0$ current lags the polarising voltage ($3U_0$) by a phase angle equal to the angle of the zero-sequence source impedance. The forward measuring element operates when:

$$3I_0 \cdot \cos(\varphi - 65°) \geq 3I0D \quad \text{(Equation 1)}$$

where

φ	is the angle between $3I_0$ and $3U_0$ (positive if $3I_0$ lags $3U_0$)
3I0D	is the set operate value

The change in operate value is small when the phase angle deviates moderately from 65°. A deviation of 20° increases the operate value by only 6.5%.

The polarising voltage, normally obtained from the broken delta windings of the VTs, can have a high content of harmonics relative to the fundamental frequency when the output voltage is low, particularly when capacitive VTs are used. To secure a correct measurement, the directional function must have an effective bandpass filtering of the voltage. In the module, the filtering secures a correct function for fundamental frequency polarising voltages down to 1% of the rated voltage.

In case of an external fault, the capacitive current generated on the line decreases the current to the earth-fault relay situated at the line end towards the fault. So the reverse direction comparator must have an increased sensitivity to secure reliable blocking in case of external faults when a directional comparison or a blocking communication scheme is used. The operate current of the reverse direction measuring element in the module is, as a fixed ratio, set at 0.6 · IN> Dir.

Activate the independent time-delay function by setting *Characteristic*= Def (or inverse time delay according to the setting table). The t1 timer starts when both the definite/inverse time characteristic and the tMin timer operate. The tMin timer starts when the $3I_0$ current to the relay is equal to or higher than the set operate value for IMin and the content of the second harmonic in $3I_0$ is less than 20%.

The inverse time calculation starts when $3I_0$ is equal to or higher than the set operate value for IMin and the content of the second harmonic in $3I_0$ is less than 20%. The inverse time delay is determined by the selection of the characteristic (NI, VI etc.) in the Characteristic setting and the setting of the characteristic IN> current.

The t1 timer is normally set to zero. Use it to add a constant time to the inverse time delay.

Figure 2: shows the effect of the IMin and tMin settings on the inverse characteristic.

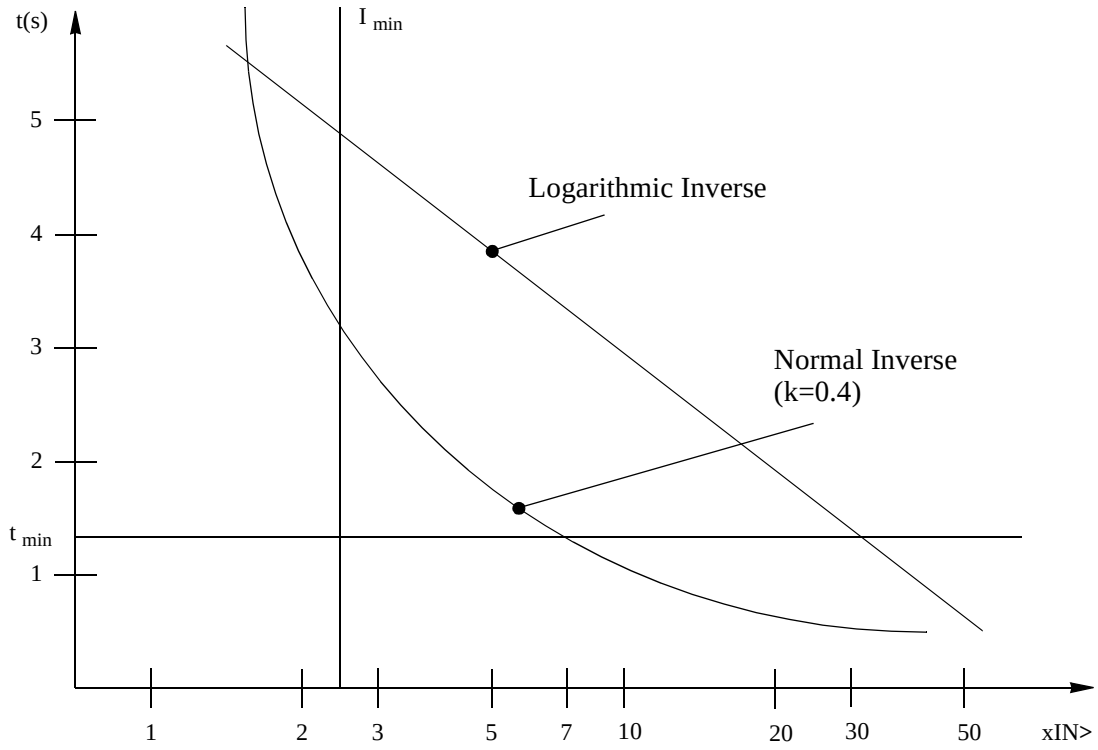

Figure 2: Normal inverse and logarithmic inverse time characteristics.

The switch-onto-fault function is used to minimise the operate time in case of pole discrepancy at breaker closing. The function is released by activating the TEF--BC binary input. The function is activated for 1 second after the reset of the TEF--BC binary input.

The function is blocked by activating the TEF--BLOCK binary input.

Activating the TEF--BLKTR blocks the definite/inverse delay trip outputs TEF--TRIP and the switch-on-to-fault trip TEF-TRSOTF.

3 Setting

To detect high resistive earth-faults, a low operate current is required. On the other hand, a low setting increases the risk for unwanted operation due to imbalance in the network and the current transformer circuits. Set the minimum operate current (IN> Dir) of the earth-fault overcurrent protection higher than the maximum false earth-fault current.

The imbalance in the network that causes false earth-fault currents is caused mainly by untransposed or not fully transposed parallel lines with strong zero-sequence mutual coupling. This false earth-fault current is directly proportional to the load current.

In a well-transposed system, the false earth-fault current is normally lower than 5% of the line current, except for extremely short parallel lines (less than 5 kilometres), where a higher false earth-fault current may be found.

In case of extremely short or not fully transposed parallel lines, measure or calculate the false earth-fault current at maximum sensitivity.

The choice of time delay characteristics - definite time, normal inverse, very inverse, extremely inverse or logarithmic inverse - depends on the network.

To achieve optimum selectivity, use the same type of characteristic for all earth-fault overcurrent protections in the network. So in networks already equipped with earth-fault overcurrent relays, the best selectivity is normally achieved by using the same type of characteristic as in the existing relays.

The following formulas for the operate time (in seconds) apply to the characteristic used within the REx 5xx terminal with line protection, see table 1.

Table 2: Operate time formulas

Characteristic:	Operate time (s):
Normal inverse	$t = \frac{0.14}{I^{0.02} - 1} \cdot k$ (Equation 2)
Very inverse	$t = \frac{13.5}{I - 1} \cdot k$ (Equation 3)
Extremely inverse	$t = \frac{80}{I^2 - 1} \cdot k$ (Equation 4)
Logarithmic inverse	$t = 5.8 - (1.35 \cdot \ln I)$ (Equation 5)

where:

I is a multiple of set current $3I_0$>

k is a time multiplying factor, settable in the range of 0.05 to 1.10

All inverse time characteristic settings are a compromise between short fault clearing time and selective operation in a large current range. The main determining factors are the maximum allowed fault-clearing time at the maximum fault resistance to be covered and the selectivity at maximum fault current.

Set the minimum operate current (IMin), of the earth-fault overcurrent protection, to one to four times the set characteristic quantity (IN>) of the inverse time delay. So an inverse characteristic with a low set IN> set to get a short operate time at minimum fault current can be combined with a higher set IMin minimum operate current, to avoid unwanted operation due to false earth-fault currents.

Set the minimum operate time independent of the inverse time characteristic. Normally, set this time longer than the time delay of distance zone 2 in REx 5xx to avoid interference with the impedance measuring system in case of earth-faults with moderate fault resistance within zone 2.

When a solidly earthed, power transformer is energised, an inrush current normally flows in the neutral-to-earth connection of the transformer. This current is divided among other earthed transformers and lines connected to the same bus, inversely proportional to their zero-sequence impedance. The amplitude and time duration of this current can be sufficiently large to cause the unwanted operation of a sensitive earth-fault overcurrent protection.

The earth-fault overcurrent protection has a built-in second harmonic current stabilisation, which prevents unwanted operation if the inrush current has a second harmonic content of 20% or more. This is normally the case. On rare occasions, it may be necessary to increase the setting of the operate value for the residual earth-fault overcurrent protection to avoid unwanted operation due to transformer inrush current.

When single-phase auto-reclosing is used, the minimum time of the inverse time delayed residual overcurrent protection (tMin) should be set to be longer than the time from the occurrence of the fault to the reclosing of the breaker at both line terminals. This avoids unwanted three-phase tripping during a single-phase auto-reclosing cycle controlled by the distance protection.

The polarising voltage for directional earth-fault overcurrent protection is normally obtained from the broken delta windings of instrument voltage transformers or by addition of the three-phase voltages in a restive network (a unit for this purpose is available). The voltage contains a certain amount of harmonics, especially when the protection is connected to CVTs.

Due to the bandpass filtering a polarising voltage down to 1 percent of the rated voltage will provide correct directional functionality. This is also valid when the protection is connected to CVTs.

The minimum polarising voltage to the protection (U_{min}) is calculated from the formula:

$$U_{min} = I_{F\ min} \cdot Z_{0\ min} \cdot \frac{U_{sec}}{U_{prim}} \qquad \text{(Equation 6)}$$

where:

I_{Fmin}	is the minimum primary operate fault current
Z_{0min}	is the minimum zero-sequence impedance seen from the relay
U_{sec}, U_{prim}	are the rated phase voltages of the broken delta connected CVTs

Observe that when a blocking scheme or a permissive scheme with current reversal or weak-end-infeed logic is used, I_{Fmin} represents the primary operate current of the reverse-looking directional element which is 60% of the forward element.

To even secure operation in unfavourable cases, U_{min} must be equal to at least 1 volt plus the maximum network frequency false voltage, due to measuring errors in the VT circuits.

If not blocked, the directional comparator operates during the dead time in case of a single-phase auto-reclosure. So the TEF--BLOCK blocking input must be activated during the single-phase auto-reclosing cycle.

4 Testing

4.1 Preparations

For testing the residual overcurrent protection a test-set with variable current, variable voltage and variable phase angle between the current and voltage is needed. Normally, test the earth-fault overcurrent protection in conjunction with the testing of the distance protection functions, using the same multiphase test-set. Figure 3: shows the connection of a three-phase test-set during the test of a directional relay.

Observe that the polarising voltage is equal to 3Uo.

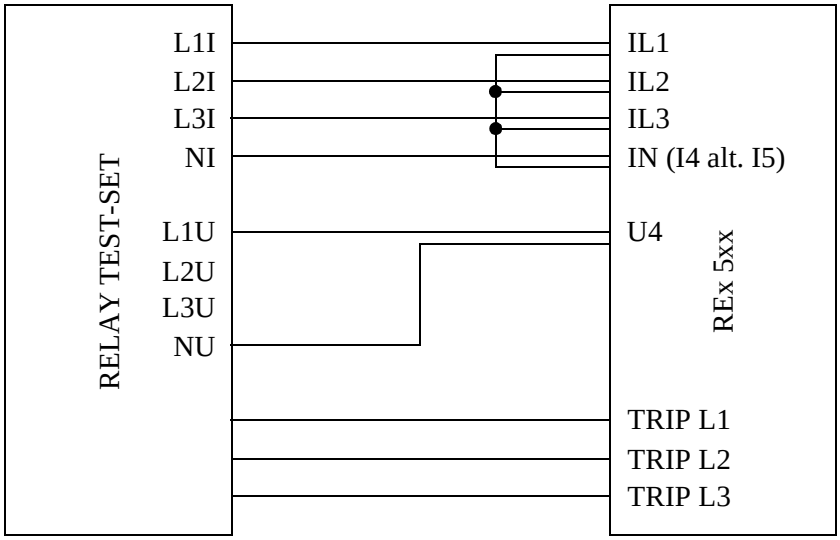

Figure 3: Connection of the test-set to the REx 5xx terminal.

Set the appropriate parameters. Include the connections to the binary inputs and outputs. Consider the logic diagram of the tested protection function when performing the test.

If the communication logic and additional communication logic blocks for residual overcurrent protection are included, those functions should be tested as well. See respectively documents.

Check the operate values of the current measuring elements and corresponding functions during the commissioning and during regular maintenance tests. ABB Network Partner recommends, but not requested, the use of the RTS 21 (FREJA) testing equipment for secondary injection-testing purposes.

Before testing, connect the testing equipment according to the valid terminal diagram of the specific REx 5xx terminal. Pay special attention to the correct connection of the input and output current terminals, and to the connection of the residual current.

It might be necessary to block the impedance measuring zones, depending on the zone settings, to prevent operation of the impedance function when checking the earth-fault protection.

Select the functions that should be blocked under the menu:

Test
TestMode
BlockFunctions

The terminal can be set into test mode by either of the following:

- By setting the test mode *Operation* = On, which occurs under the menu:

  Test
  TestMode
  Operation

- The terminal is automatically set to test mode by applying a logical 1 to the TEST-INPUT functional input.

Important!! The function is blocked if the corresponding setting under the *BlockFunctions* menu remains on and the TEST-INPUT signal remains active.

4.2 Tests

1.1 Check if the input and output logical signals in Figure 1: are configured to the corresponding binary inputs and outputs of the tested terminal. If not, configure them for testing purposes. Set the operation of the TEF protection to mode *On*.

1.2 Set the logical input signals to logical 0 and note on the local HMI that the TEF--TRIP and the TEF--TRSOTF signal is not activated (= logical 0). Values of the logical signals belonging to the time delayed residual overcurrent protection are available under menu tree:

ServiceReport
Functions
EarthFault
TimeDelayEF

1.3 Set the polarising voltage to 2% of U_b and the phase angle between voltage and current to 65°, the current lagging the voltage. Check that the operate current of the forward directional element is equal to the IN> Dir setting. The IN> Dir function activates the TEF--STFW output.

Check with angles φ = 20° and 110° that the measuring element operates when $3I_0 \cdot \cos(65° - \varphi) \geq$ IN> Dir.

1.4 Reverse the polarising voltage (φ = 180° + 65° = 245°) and check that the operate current of the reverse directional element is 0.6 · IN> Dir.

The function activates the TEF--STRV output.

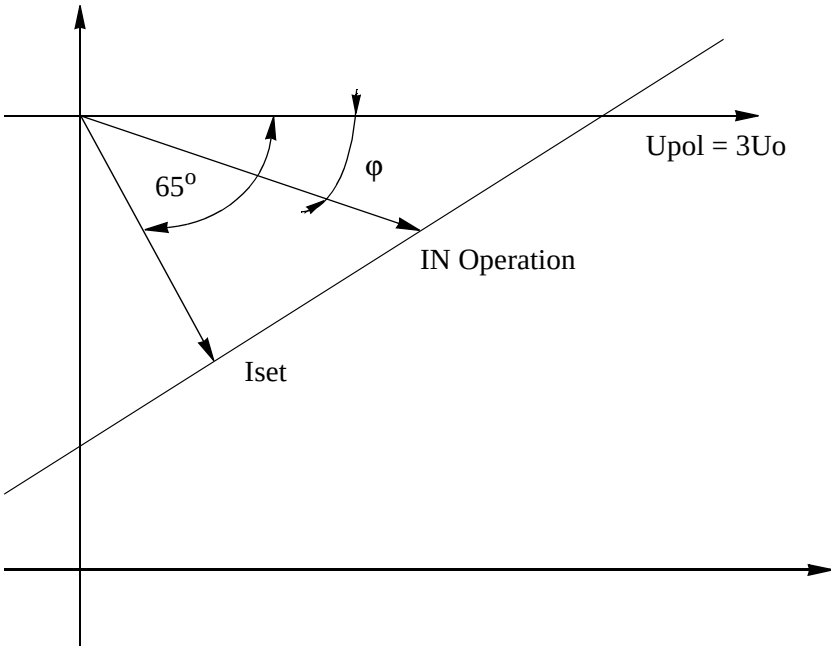

Figure 4: Measuring characteristic of the directional element.

1.5 To activate the directional function, set *Direction* = Directional.

Set the polarising voltage to 2% of U_b and the phase angle between voltage and current to 65°.

Check the operate current of the IMin function. The function activates the TEF--START output.

1.6 When independent time delay (definite) is selected, check the operate time of the t1 timer by injecting a current two times the set IMin operate value.

When inverse time delay is selected, check the operate time at three points of the inverse characteristic. The formulas for operate time for different types of inverse time delay curves are shown in Table 2 on page 88.

Also check the tMin (minimum operate time) and IMin (minimum operate current) functions.

1.7 Activate the TEF--BC input to check the function of the switch-onto-fault logic.

Check that the TEF--TRSOTF output is activated with a 300 ms time delay when injecting a current two times the set IMin operate value in forward direction.

1.8 Set the phase angle of the polarising voltage to φ=245° and check that the directional current function and the switch-onto-fault logic gives no operation when the current is in the reverse direction.

1.9 Connect the rated DC voltage to the TEF--BLOCK configured binary input and switch on the fault current. No TEF--TRIP nor TEF--START signal should appear. Switch off the fault current.

1.10 Connect the rated DC voltage to the TEF--BLKTR configured binary input and switch on the fault current. No TEF--TRIP nor TEF--TRSOTF should appear. But the output TEF--START shall be activated.

4.3 Directional comparison logic function

If communication logic for residual overcurrent protection is included, see that document for further testing of the blocking and permissive schemes. If additional communication logic is included as well, see that document for testing of reversal current and weak-end-infeed (Trip/Echo).

5 Appendix

5.1 Function block

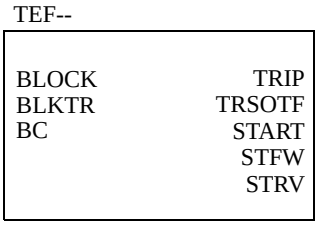

5.2 Signal list

Block	Signal	Type	Description
TEF--	BLOCK	IN	Block of Time delayed earth-fault function
TEF--	BLKTR	IN	Block of Time delayed earth-fault trip
TEF--	BC	IN	Breaker closing command
TEF--	TRIP	OUT	Trip by Time delayed earth-fault function
TEF--	TRSOTF	OUT	Trip by earth-fault switch-onto-fault function
TEF--	START	OUT	Start (non-directional) earth-fault function
TEF--	STFW	OUT	Start forward directional earth-fault function
TEF--	STRV	OUT	Start reverse directional earth-fault function

5.3 Setting table

Parameter	Range	Unit	Default	Parameter description
Operation	Off, On		Off	Time delayed earth-fault function On/Off
IMeasured	I4, I5		I4	Current signal used for earth-fault function
Characteristic	Def, NI, VI, EI, LOG		Def	Select time characteristic for earth-fault protection
IN>	5-300	%	5	Start current of earth-fault protection, as a percentage of Ib. Ib is the same as selected for *IMeasured* above (I4b or I5b)
IMin	100-400	%	100	Minimum operate current, as a percentage of IN
t1	0.000-60.000	s	0.000	Independent (definite) time delay
k	0.05-1.10		0.05	Time multiplier for inverse time function
tMin	0.000-60.000	s	0.050	Min. operate time for inverse time delay function
Direction	NonDir, Directional		NonDir	Selection of directional or non-directional earth-fault protection
UMeasured	U4, U1+U2+U3		U4	Voltage signal used for directional earth-fault function
IN> Dir	5-35	%	5	Start level of DirE/F, if DirE/F is selected, as a percentage of Ib. Ib is the same as selected for *IMeasured* above (I4b or I5b)

1 Application

This communication logic is intended for residual overcurrent protections.

To achieve fast fault clearing for a fault on the part of the line not covered by the instantaneous zone 1, the stepped distance protection function can be supported with logic, that uses communication channels.

One communication channel in each direction, which can transmit an on/off signal is required. The performance and security of this function is directly related to the transmission channel speed and security against false or lost signals. So special channels are used for this purpose. When power line carrier is used for communication, these special channels are strongly recommended due to the communication disturbance caused by the primary fault.

In the directional comparison scheme, information of the fault current direction must be transmitted to the other line end.

With directional comparison, an operate time of 50-60 ms, including a channel transmission time of 20 ms, can be achieved. This short operate time enables auto-reclosing after the fault.

During a single-phase reclosing cycle, the auto-reclosing device must block the directional comparison earth-fault scheme.

The communication logic module for the REx 5xx terminal contains circuits for blocking overreach and permissive overreach schemes. The module also contains logic for the weak-end-infeed and current-reversal functions, which are used only in the permissive overreach scheme.

2 Theory of operation

2.1 Directional comparison logic function

The directional comparison function contains logic for blocking overreach and permissive overreach schemes.

The circuits for the permissive overreach scheme contain logic for current reversal and weak-end-infeed functions. These functions are not required for the blocking overreach scheme.

Use the independent or inverse time functions in the directional earth-fault protection module to get back-up tripping in case the communication equipment malfunctions and prevents operation of the directional comparison logic.

Connect the necessary signal from the auto-recloser for blocking of the directional comparison scheme, during a single-phase auto-reclosing cycle, to the EFC--BLOCK input of the directional comparison module.

2.1.1 Blocking scheme

In the blocking overreach scheme, a signal is sent to the other line end if the directional element detects a fault in the reverse direction. When the forward directional element operates, it trips the line after a short time delay if no blocking signal is received from the other line end. The time delay, normally 30-40 ms, depends on the communication transmission time and the chosen safety margin.

One advantage of the blocking scheme is that only one channel (carrier frequency) is needed and the channel can be shared with the impedance-measuring system, if that also works in the blocking mode. The communication signal is also transmitted on a healthy line and no signal attenuation will occur due to the fault.

Blocking schemes are particularly favourable for three-terminal applications if there is no zero-sequence current outfeed from the tapping. The blocking scheme is immune to current reversals because the received carrier signal is maintained long enough to avoid unwanted operation due to current reversal. There is neither any need for weak-end-infeed logic, because the strong end trips for an internal fault when no blocking signal is received from the weak end. But the fault clearing time, is generally longer for a blocking scheme than for a permissive one.To release the blocking scheme, set the SchemeType = Blocking under the menu:

Settings
Functions
Group*n*
EarthFault
EFCom

Note: *n*=1,2,3 or 4, depending on which group to set.

If the fault is on the line, the forward direction measuring element operates. If no blocking signal comes from the other line end via the EFC--CR binary input (carrier receive) the EFC--TRIP output is activated after the tCoord set time delay.

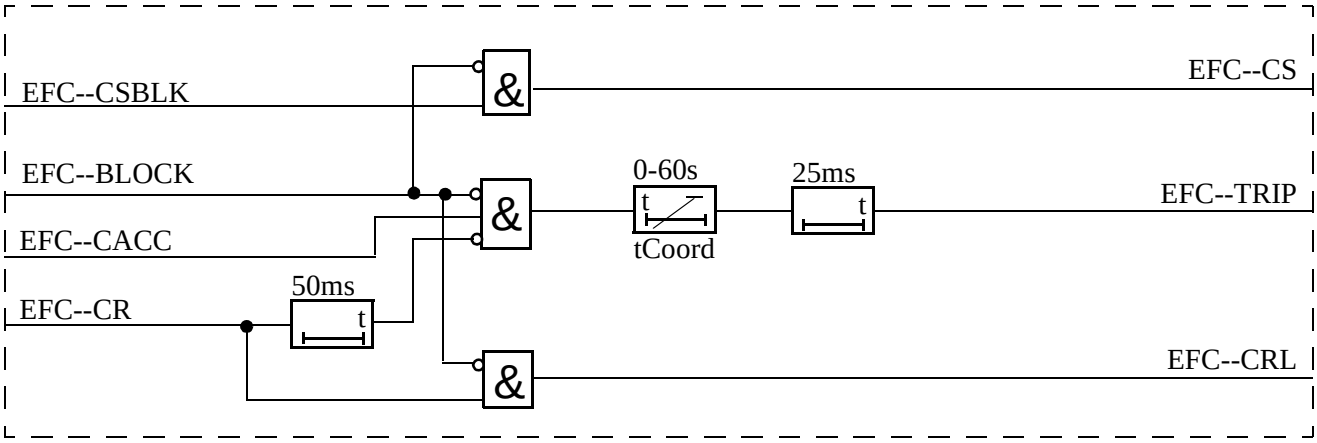

Figure 1: Simplified logic diagram, Scheme type = blocking.

2.1.2 Permissive overreach scheme

In the permissive scheme, the forward direction measuring element sends a permissive signal to the other line end if a fault is detected in the forward direction. The direction element at the other line end must wait for a permissive signal before giving a trip signal. Independent channels (frequencies) must be available for the communication in each direction.

An impedance-measuring relay which works in an underreach permissive mode with one channel in each direction can share the channels with the earth-fault overcurrent protection. If the impedance measuring relay works in the permissive overreach mode, common channels can be used in single-line applications. In case of double lines connected to a common bus at both ends, use common channels only if the ratio Z_{1S} / Z_{0S} (positive through zero-sequence source impedance) is about equal at both line ends. If the ratio is different, the impedance measuring and the directional earth-fault current system of the healthy line may detect a fault in different directions, which could result in unwanted tripping.

Common channels can not be used when the weak-end-infeed function is used in the distance or earth-fault protection. To release the permissive overreach scheme, set SchemeType = Permissive under the menu:

Settings
Functions
Group*n*
EarthFault
EFCom

Note: *n*=1,2,3 or 4, depending on which group to set.

In case of an internal fault, the forward direction measuring element operates and sends a permissive signal to the remote end via the EFC--CS output (carrier send). Local tripping is permitted when the forward direction measuring element operates and a permissive signal is received via the EFC--CR binary input (carrier receive).

The total operate-time for the system is the sum of the Pick-up time (of the measuring element) and the Transmission time (of the permissive signal).

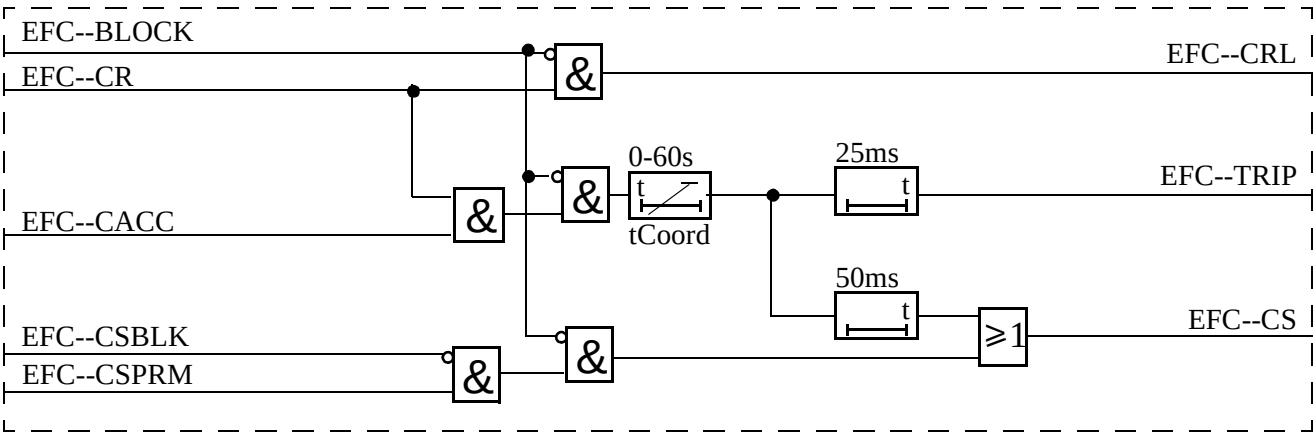

Figure 2: Simplified logic diagram, Scheme type = permissive.

3 Setting

The settings are done from the local HMI under the menu:

Settings
Functions
Group n (n = 1..4)
EarthFault
EFCom

3.1 Blocking scheme

In the blocking scheme, set the *tCoord* timer to the channel transmission time during disturbance conditions. Add a margin of 20-30 ms. Two times the nominal value of the channel transmission time is recommended when a power line carrier is used.

3.2 Permissive communication scheme

In the permissive communication scheme, the security against unwanted operation caused by spurious carrier receive signals can be increased by delaying the tripping output with the *tCoord* timer. Set the timer in the range of 0.000 to 60.000 s. In most cases, a time delay of 30 ms is sufficient.

To avoid unwanted trip from the weak-end-infeed logic (if spurious carrier signals should occur), set the operate value of the broken delta voltage level detector ($3U_0$) higher than the maximum false network frequency residual voltage that can occur during normal service conditions. The recommended minimum setting is two times the false zero-sequence voltage during normal service conditions.

4 Testing

The testing of this function should be performed together with the time delayed residual overcurrent protection. See that document for necessary test equipment and the general testing performance.

If the current reversal and weak-end-infeed logic for the time delayed residual overcurrent protection is included, that function should be tested as well.

Set the appropriate parameters. Include the connections to the binary inputs and outputs. Consider the logic diagram of the tested protection function when performing the test.

4.1 Directional earth-fault overcurrent protection

First, test this function according to the document “*Time delayed residual overcurrent protection*”. Then continue with the next section.

4.2 Directional comparison logic function

4.2.1 Blocking scheme

2.1 Use an injection current two times the set operate value of the forward directional element to check that the EFC--TRIP output is activated after the delay set on the *tCoord* timer.

2.2 Activate the forward directional element and then the EFC--CR blocking input before the set *tCoord* time elapses. Check that the EFC--TRIP output is not activated. Check that the EFC--CRL output is activated when EFC--CR input is activated.

2.3 Activate the EFC--BLOCK digital input and check the blocking of the EFC--TRIP output signal.

4.2.2 Permissive scheme

3.1 Use an injection current two times the set operate value of the forward directional element to check that the EFC--CS output is activated.

3.2 Activate the EFC--CR input. Use an injection current two times the set operate value of the forward directional element to check that the EFC--TRIP output is activated after the delay, set on *tCoord* timer. Deactivate the EFC--CR input and check that no output is obtained on EFC--TRIP.

If the current reversal and weak-end-infeed logic for earth-fault protection is included, proceed with the testing according to the corresponding document. The reversal current and weak-end-infeed functions shall be tested together with the permissive scheme.

5 Appendix

5.1 Function block

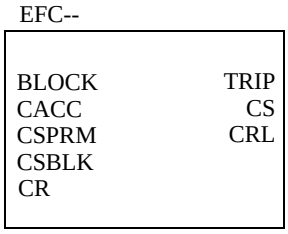

5.2 Signal list

Block	Signal	Type	Description
EFC--	BLOCK	IN	Block of Communication Scheme Logic
EFC--	CACC	IN	Signal to be used for tripping by Communication Scheme Logic
EFC--	CSPRM	IN	Signal for Carrier Send in permissive scheme
EFC--	CSBLK	IN	Signal for Carrier Send in blocking scheme
EFC--	CR	IN	Carrier Received for Communication Scheme Logic
EFC--	TRIP	OUT	Trip by Communication Scheme Logic
EFC--	CS	OUT	Carrier Send by Communication Scheme Logic
EFC--	CRL	OUT	Carrier Receive from Communication Scheme Logic

5.3 Setting table

Parameter	Range	Unit	Default	Parameter description
Operation	Off, On		Off	Earth fault communication function On/Off
Scheme-Type	Permissive, Blocking		Permis-sive	Scheme type, mode of operation
tCoord	0.000-60.000	s	0.050	Communication scheme coordination time

1 Application

Undervoltage protection prevents the sensitive elements, in many cases the consumers of the electric energy, from running under conditions that could cause their overheating and thus shorten their life expectancy below the economical limits. In many cases, it is a useful tool in circuits for local or remote automation processes in the power system.

The time delayed undervoltage protection is an optional function in the REx 5xx terminals.

The use of the optional, built-in, fuse-failure supervision function can prevent unnecessary operation of the undervoltage protection during fuse-failure and during open line disconnector conditions.

2 Measuring principle

The voltage measuring elements within one of the built-in digital signal processors continuously measures the phase-to-earth voltages in all three phases. Recursive Fourier filter, filters the input voltage signals, and a separate trip counter prevents high overreaching or underreaching of the measuring elements.

3 Design

3.1 Undervoltage protection

Figure 1: shows a simplified logic diagram of the undervoltage protection function.

The trip output signal TUV--TRIP changes from logical 0 to logical 1 if at least one of the signals TUV--STUL1N, TUV--STUL2N or TUV--STUL3N remains equal to logical 1 for a time longer than the set value on the corresponding timer. The TUV--VTSU signal, that is normally connected to the fuse failure supervision function, can inhibit the operation of the undervoltage protection. Any external signal, connected to the TUV--BLOCK input also blocks the operation of the undervoltage protection. Trip output signal TUV--TRIP is blocked by any signal connected to TUV--BLKTR input.

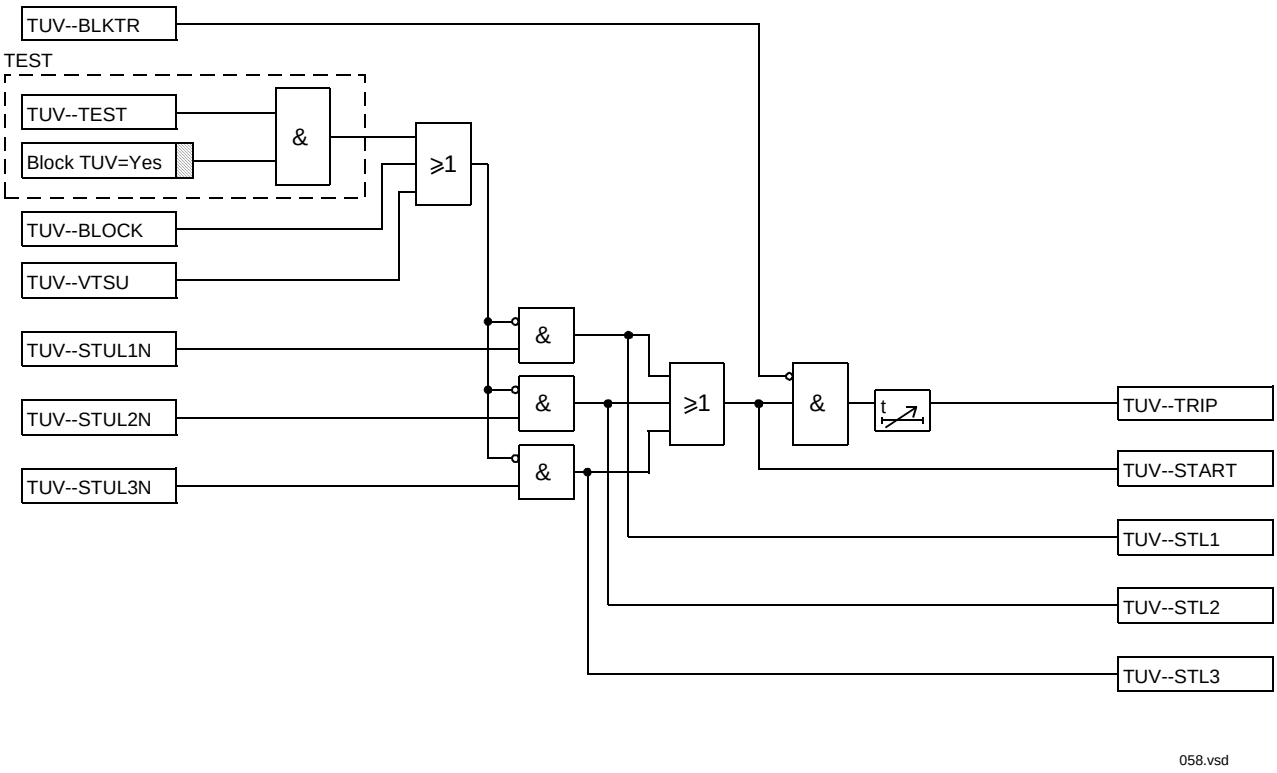

Figure 1: Undervoltage protection — simplified logic diagram

4 Setting

The parameters for the undervoltage protection are set on the local HMI under the menu:

Settings
Functions
Group n (n = 1...4)
TimeDelayUV

All the voltage conditions in the system where the undervoltage protection performs its functions should be considered.. The same also applies to the associated equipment, its voltage and time characteristic.

5 Testing

The function can be disabled during testing mode under the following conditions:

- First, select the function, which should be blocked, under the submenu:

  Test
  TestMode
  BlockFunctions

Then, there are two ways of setting the terminal into test mode, both operative separately or together (compare with logical ‘OR’ condition):

- Set the terminal into operational testing mode by setting the value of the Operation = On parameter. Select the operate mode under the submenu:

  Test
  TestMode
  Operation

- The terminal is switched to testing mode when the logical 1 is specified for the TEST-INPUT functional input.

Important!! The function is blocked if the corresponding setting under the BlockFunctions menu remains on, and the TEST-INPUT signal remains active.

The operation of the undervoltage protection should be checked during commissioning and during regular maintenance tests. ABB Network Partner recommends, although it does not absolutely request, the use of RTS 21 (FREJA) testing equipment for secondary injection testing.

The corresponding binary signals that indicate the operation of the undervoltage protection function can be found on the local HMI under the menu:

Service Report
Functions
TimeDelayUV

The signals can also be observed using the SM/REX 500 module in SMS and the configuration tool CAP/REx 500.

The appendix describes the corresponding signals that display information about the operation of the voltage protections.

The following steps should be followed when testing the undervoltage protection:

1 Connect the three-phase testing equipment to the tested terminal according to the valid connection diagram. Check if the TUV--TRIP output signal (see Figure 1:) is configured to the corresponding binary output of the tested terminal. If not, configure it for the testing purposes. Set the corresponding time delay at 0.Make sure that no blocking signal (TUV--BLOCK; TUV--BLKTR; TUV--VTSU) is active.

2 Set the three-phase voltages to their rated values. Slowly decrease the voltage in one of the phases, until the TUV--TRIP signal changes to logical 1. Note the operate value and compare it with the set value. The result should be within the ±5% of the expected operate value plus the accuracy class of the testing equipment. Check that the phase indication is correct. Increase the measured voltage to rated operate conditions.

3 Repeat the measurement for the other two phases.

4 Instantaneously decrease the voltage in one-phase to a value about 20% lower than the measured operate value. Measure the operate time of the voltage measuring element. For timer stop, use the TRUV--TRIP signal. Increase the measured voltage to rated operate conditions.

5 Set the time delay on the corresponding timer to the actual setting value. Instantaneously decrease the voltage to about 20% lower value than the measured operate value in one-phase. Measure the time delay for the TUV--TRIP signal, and compare it with the set value (consider the measured operate time from the previous item). Increase the measured voltage to rated operate conditions.

6 Connect the rated auxiliary voltage to the TUV--BLOCK binary input (if not configured, configure it for the testing purposes), and disconnect one phase voltage from the terminal. No operation of the undervoltage protection must occur, i.e. not even the start signals should operate. Disconnect the voltage from the binary input, which is configured to the TUV--BLOCK function input.

7 Repeat the procedure also for the TUV--BLKTR function. In this case the trip signal TUV--TRIP must not operate, while the appropriate start signals should operate.

8 Check that the connection to TUV--VTSU is properly configured, if the fuse-failure function is installed in the terminal. Activate the fuse-failure supervision function and disconnect one of the phase voltages from the terminal. The undervoltage protection must not operate.

9 Disconnect the voltages from the tested terminal. Do not forget to reconfigure the terminal to its normal operate configuration, if necessary.

6 Appendix

6.1 Function block

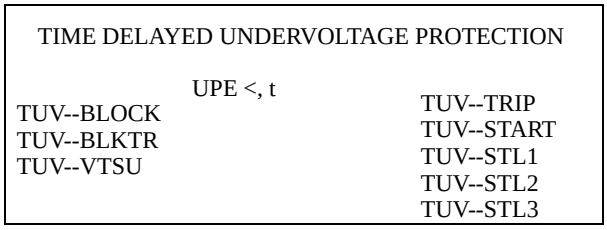

6.2 Signal list

Block	Signal	Type	Description
TUV--	BLOCK	IN	Block undervoltage function
TUV--	BLKTR	IN	Block of trip from time delayed undervoltage function
TUV--	VTSU	IN	Block from voltage transformer circuit supervision
TUV--	TRIP	OUT	Trip by time delayed undervoltage function
TUV--	START	OUT	Start phase undervoltage
TUV--	STL1	OUT	Start phase undervoltage phase L1
TUV--	STL2	OUT	Start phase undervoltage phase L2
TUV--	STL3	OUT	Start phase undervoltage phase L3

6.3 Setting table

Parameter	Range	Unit	Default	Parameter description
Operation	Off, On		Off	Undervoltage function On/Off.
UPE<	10-100	%	70	Operate phase voltage, as a percentage of U1b
t	0.000-60.000	s	0.000	Time delay

1 Application

The application areas of the overvoltage protection functions are different in distribution and transmission networks.

The overvoltage protection is used to protect the equipment and its insulation against overvoltage. In this way it prevents damage to the equipment in the power system and shortening of their life time.

The residual overvoltage protection function is mainly used in distribution networks, primarily as a back-up protection for the residual overcurrent protection in the line feeders. This to secure disconnection of earth-faults.

The time delayed overvoltage protection and the time delayed residual overvoltage protection are both optional functions in the REx 5xx terminals, and can be combined or separately ordered.

2 Measuring principles

The voltage measuring elements within one of the built-in digital signal processors (DSPs) continuously measure the phase-to-earth voltages in all three phases and the residual voltage (ST3U0) from the three phases. Recursive Fourier filter filters the input voltage signals and a separate trip counter prevents high overreaching or underreaching of the measuring elements.

2.1 Design

Figure 1: shows a simplified logic diagram of the overvoltage protection function. The time delayed residual overvoltage protection and the time delayed overvoltage protection share some input signals and logical elements. For this reason and for the sake of better overview both the protections are shown in the figure.

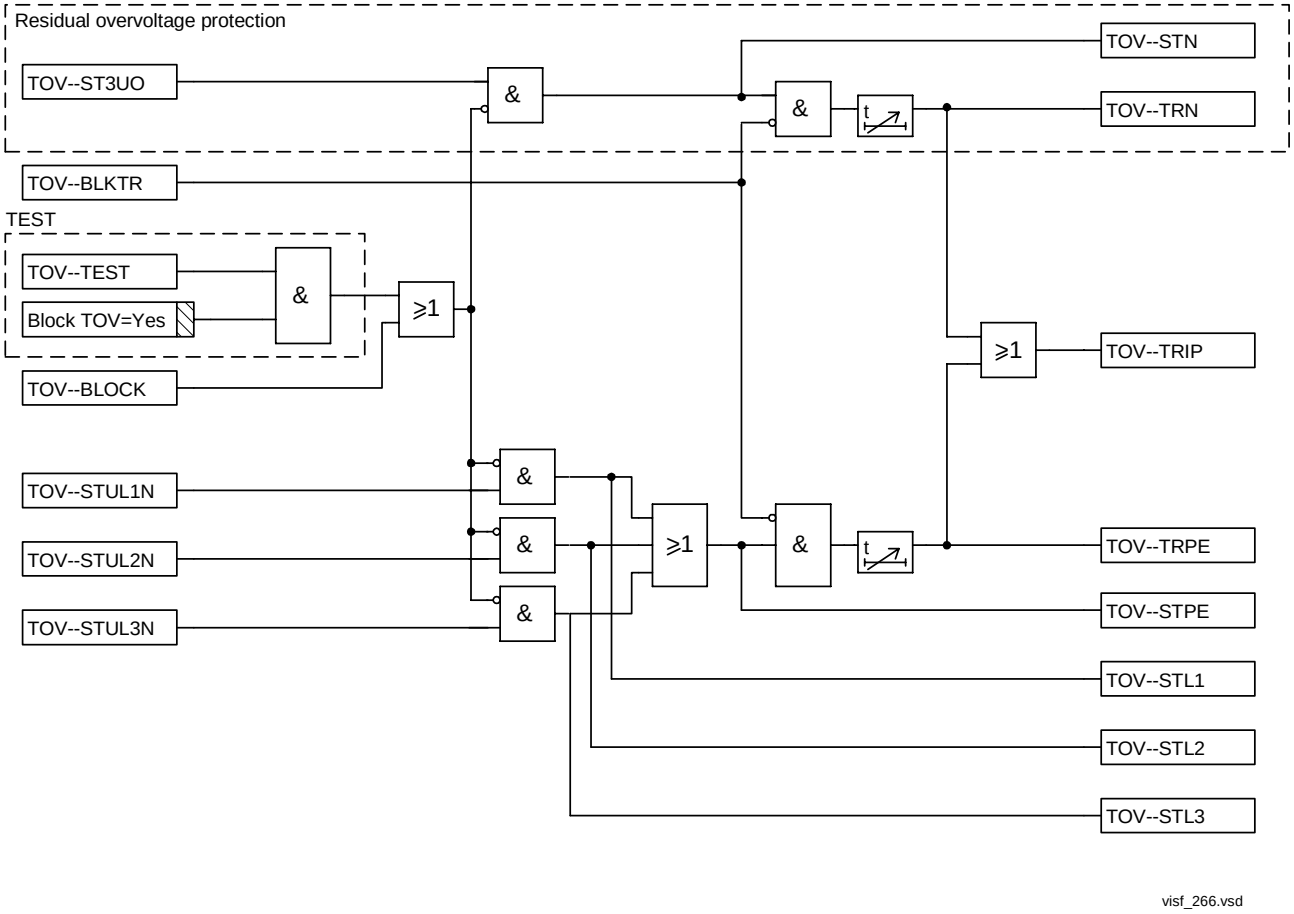

Figure 1: Time delayed overvoltage protection — simplified logic diagram.

The TOV--TRIP (and TOV--TRPE and/or TOV--TRN) output signal changes from logical 0 to logical 1 if at least one of the logical signals TOV--STUL1N, TOV--STUL2N, TOV--STUL3N or TOV--ST3U0 remains equal to logical 1 for a time longer than the set value on the corresponding timer. Also the signals TOV--TRPE or TOV--TRN will be high, to indicate which protection that caused the trip.

Any signal connected to the TOV--BLOCK input blocks the operation of the time delayed overvoltage protection. Similarly any signal connected to TOV--BLKTR will block the trip output from the time delayed overvoltage protection.

3 Setting

3.1 Time delayed overvoltage protection

The time delayed overvoltage protection parameters can be set on the local HMI under the menu:

Settings
Functions
Group n (n = 1...4)
TimeDelayOV

All the voltage conditions in the system where the overvoltage protection performs its functions must be considered. The same also applies to the associated equipment, its voltage-time characteristic.

The overvoltage protection should be set higher than the expected maximum system operate voltage that is in a particular part of a network. A safety margin of at least 10% should also be considered due to the inaccuracies in the instrument transformers, calculation methods, and the inaccuracy of the measuring elements in the terminal.

3.2 Time delayed residual overvoltage protection

The time delayed residual overvoltage protection parameters can be set on the local HMI under the menu:

Settings
Functions
Group n (n = 1...4)
TimeDelayOV

All the voltage conditions in the system where the residual overvoltage protection performs its functions must be considered. The same also applies to the associated equipment, its voltage-time characteristic.

The residual overvoltage protection should be set higher than the expected maximum system operate voltage that is in a particular part of a network. A safety margin of at least 10% should also be considered due to the inaccuracies in the instrument transformers, calculation methods, and the inaccuracy of the measuring elements in the terminal.

4 Testing

4.1 Time delayed overvoltage protection

The function can be disabled during testing mode under the following conditions:

- First, select the function, which should be blocked, under the submenu:

  Test
  TestMode
  BlockFunctions

Then, there are two ways of setting the terminal into test mode, both operative separately or together (compare with logical ‘OR’ condition):

- Set the terminal into operational testing mode by setting the value of the Operation = On parameter. Select the operate mode under the submenu:

  Test
  TestMode
  Operation

- The terminal is switched to testing mode when the logical 1 is specified for the TEST-INPUT functional input.

Important!! The function is blocked if the corresponding setting under the BlockFunctions menu remains on, and the TEST--INPUT signal remains active.

The operation of the overvoltage protection should be checked during commissioning and during regular maintenance tests. ABB Network Partner recommends, although it does not absolutely request, the use of RTS 21 (FREJA) testing equipment for secondary injection testing.

The corresponding binary signals that indicate the operation of the overvoltage protection function can be found on the local HMI under the menu:

Service Report
Functions
TimeDelayOV

The status of the signals can also be checked using the SM/REx 500 module in SMS and with the CAP/REx 500 configuration tool.

The appendix describes the corresponding signals that display information about the operation of the overvoltage protection.

The following steps should be followed when testing the overvoltage protection:

1 Connect the three-phase testing equipment to the tested terminal according to its valid connection diagram. Check that the TOV--TRIP and TOV--TRPE logical signals (see Figure 1:) are configured to the corresponding binary output of the terminal. If not, configure it for the testing purposes. The signals will be used for time measurement. Make sure that no blocking signal (TOV--BLKTR, TOV--BLOCK) is active.Set the operation time delay of the function to 0.

2 Slowly increase the voltage in one of the phases, until the TOV--TRIP and/or TOV--TRPE signal changes to logical 1. Note the operate value and compare it with the set value. The result should be within ±5% of the expected value with the addition of the accuracy class of the testing equipment. Check that correct phase is indicated by observing TOV--STL1, TOV--STL2 and TOV--STL3 signals.Reduce the measured voltage to zero.

3 Repeat the measurement for the other two phases phase by phase.

4 Set the time delay on the corresponding timer at the actual setting value. Apply about 20% higher voltage than the measured operate value for one-phase. Measure the time delay for the TOV--TRIP or TOV--TRPE signal and compare it with the set value (consider the measured operate time from the previous item).

5 Check that no instantaneous or delayed function (start or trip signal) occurs when the TOV--BLOCK signal is activated.

6 Check that no delayed function (trip signal!) occurs when the TOV--BLKTR logical signal is active.

4.2 Time delayed residual overvoltage protection

When the function should be blocked during testing, select the function and set *BlockTOV* to *Yes* under the menu:

Test
TestMode
BlockFunctions

The function can be disabled during testing mode under either of the following conditions:

- The terminal is set into test mode by setting the Operation=On under the menu:

  Test
  TestMode
  Operation

- The terminal is switched into test mode by applying a logical 1 to the TEST-INPUT functional input.

Important!! The function is blocked if the corresponding setting under the BlockFunctions menu remains on, and the TEST-INPUT signal remains active.

The operation of the residual overvoltage protection should be checked during commissioning and during regular maintenance tests. ABB Network Partner recommends, although it does not absolutely request, the use of RTS 21 (FREJA) testing equipment for secondary injection testing.

The corresponding binary signals that indicate the operation of the residual overvoltage protection function can be found on the local HMI under the menu:

ServiceReport
Functions
TimeDelayOV

The status of the signals can also checked using the SM/REx 500 module in SMS and with the CAP/REx 500 configuration tool.

The appendix describes the corresponding signals that display information about the operation of the residual overvoltage protection.

The following steps should be followed when testing the residual overvoltage protection:

1 Connect the testing equipment to the tested terminal according to its valid connection diagram. Check that the TOV--TRIP and TOV--TRN logical signals (see Figure 1:) are configured to the corresponding binary output of the terminal. If not, configure them for the testing purposes. The signals will be used for time measurement. Make sure that no blocking signal (TOV--BLKTR, TOV--BLOCK) is active. Set the operation time delay of the function to 0.

2 Slowly increase the voltage, until the TOV--TRIP and TOV--TRN signal changes to logical 1. Note the operate value and compare it with the set value. The result should be within ±5% of the expected value with the addition of the accuracy class of the testing equipment. Check that the TOV--STN signal is indicated. Reduce the voltage to zero.

3 Set the time delay on the corresponding timer at the actual setting value. Apply about 20% higher voltage than the measured operate value. Measure the time delay for the TOV--TRIP or TOV--TRN signal and compare it with the set value (consider the measured operate time from the previous item).

4 Check that no output (no instantaneous or delayed function) occurs when the TOV--BLOCK signal is activated.

5 Check that no trip output (no delayed function) occurs when the TOV--BLKTR logical signal is active.

5 Appendix

5.1 Function block

TIME DELAYED RESIDUAL OVERVOLTAGE PROT: 3U0>, t TOV--TRN TOV--STN
COMMON FUNCTIONS AND SIGNALS TOV--BLOCK TOV--TRIP TOV--BLKTR
TIME DELAYED OVERVOLTAGE PROTECTION UPE>, t TOV--TRPE TOV--STPE TOV--STL1 TOV--STL2 TOV--STL3

5.2 Signal list

Table 1:

Block	Signal	Type	Description
TOV--	BLOCK	IN	Block of time delayed overvoltage function
TOV--	BLKTR	IN	Block of tri from time delayed overvoltage function
TOV--	TRIP	OUT	
TOV--	TRN	OUT	Trip by residual overvoltage
TOV--	TRPE	OUT	Trip by phase overvoltage function
TOV--	STN	OUT	Start residual overvoltage
TOV--	STPE	OUT	Start phase overvoltage
TOV--	STL1	OUT	Start phase overvoltage phase L1
TOV--	STL2	OUT	Start phase overvoltage phase L2
TOV--	STL3	OUT	Start phase overvoltage phase L3

5.3 Setting table

Table 2:

Parameter	Range	Unit	Default	Parameter description
Operation	Off, On		Off	Overvoltage function On/Off.
UPE>	50-200	%	120	Operate phase voltage, as a percentage of U1b
t	0.000-60.000	s	0.000	Time delay phase voltage function
3U0>	5-100	%	30	Operate neutral voltage, as a percentage of U1b
t	0.000 - 60.000	s	0.000	Time delay neutral voltage function

1 Application

The trip of the circuit breaker at a prolonged loss of voltage at all the three phases is normally used in automatic restoration systems to facilitate the system restoration after a major blackout. The loss of voltage check function gives a trip signal only if the voltage in all the three phases is low for more then 7 seconds. If the trip to the circuit breaker is not required, than the function can be used for signallization through an output contact or through the event recording function.

2 Theory of operation

The voltage-measuring elements continuously measure the three-phase-to-phase voltages and three-phase-to-earth voltages, and compare them with the set values. Fourier's recursive filter filters the voltage signals, and a separate trip counter prevents overreaching of the measuring elements.

The logical values of the following signals become equal to 1, if the related phase measured voltage decrease under the pre-set value:

- STUL1N for U_{L1N} voltage
- STUL2N for U_{L2N} voltage
- STUL3N for U_{L3N} voltage

The 150 ms output trip pulse is emitted if all the three phase voltages are below the setting value for more than 7 s. The function can be blocked from the fuse failure supervision function intervention and when the main circuit breaker is opened.

3 Design

The simplified logic diagram of the stub protection function is shown in figure 1.

The function is disabled (blocked) if:

- The terminal is in TEST status (TEST-ACTIVE is high) and the function has been blocked from the HMI (BlockLOV=Yes)
- The input signal LOV--BLOCK is high

The LOV--BLOCK signal is a general purpose blocking signal of the loss of voltage check function. It can be connected to a binary input of the terminal in order to receive a block command from external devices or can be software connected to other internal functions of the terminal itself in order to receive a block command from internal functions. Through OR gate it can be connected to both binary inputs and internal function outputs.

The function has a particular internal latched enable logic that:

- enables the function (signal latched enable in figure 1 is set to 1) when the line is restored; i.e. at least one of the three voltages is high for more then 3 seconds (signal set enable in figure 1).

- disables the function (signal latched enable in figure 1 is set to 0) if the signal reset enable in figure 1 is set to 1 (reset of latced enable signal).

The latched enable signal is reset (i.e. the function is blocked) if:

- the main circuit breaker is opened. This is achieved by connecting a N.C. contact of the main circuit breaker to a terminal binary input connected to the function input LOV--BC
- the fuse failure supervision function has tripped. This is achieved by connecting the output signal of the fuse failure supervision, FUSE-VTSU, to the function input LOV--VTSU
- not all the three phase voltages are low for more then 10 s (only one or two phase voltages are low).

The output trip signal of the voltage check function is LOV--TRIP.

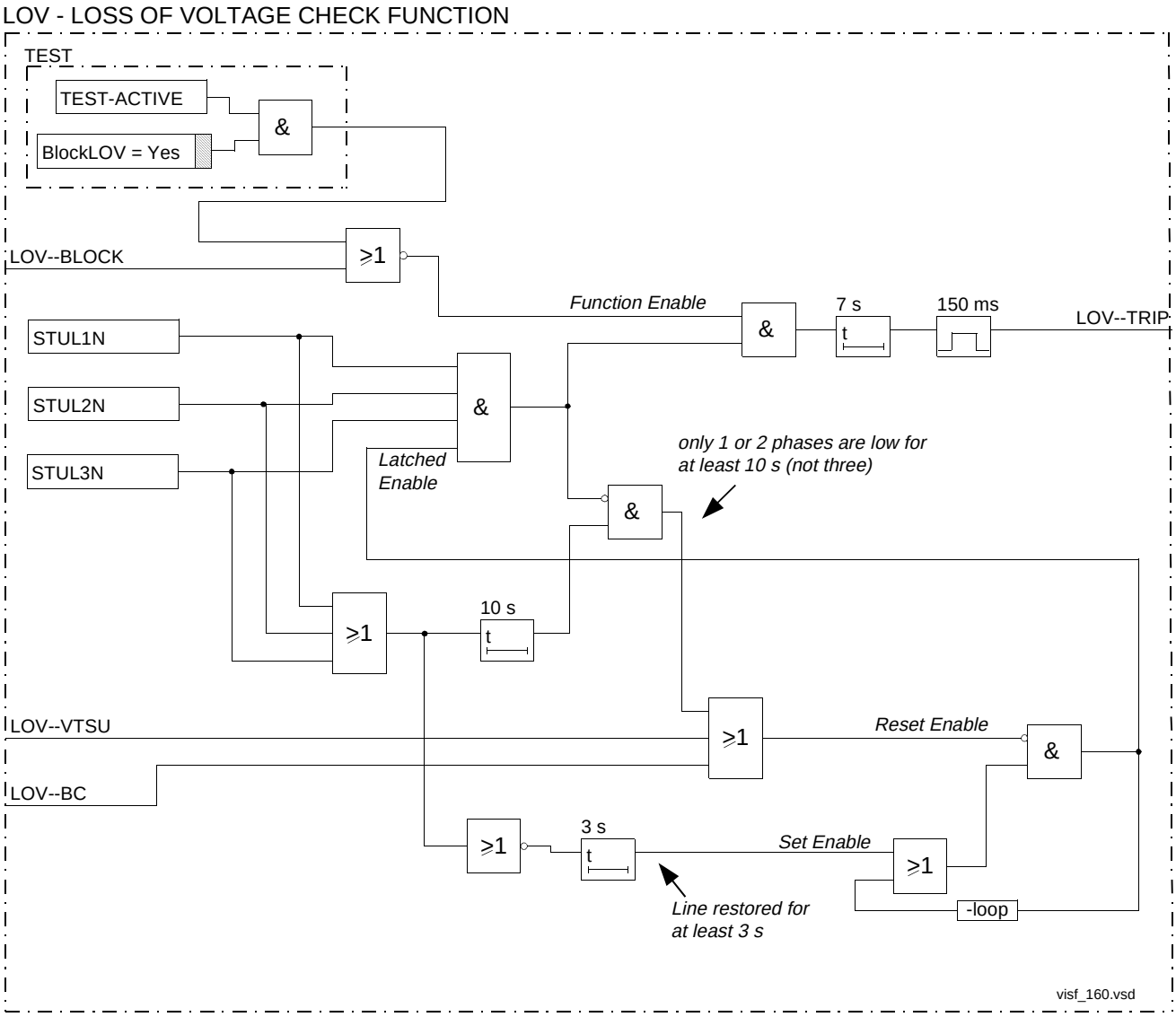

Figure 1: Simplified logic diagram of loss of voltage check protection function

4 Setting instructions

The setting parameters are accessible through the HMI. The parameters for the loss of voltage function are found in the HMI-tree under:

Settings
Functions
Group 1,2,3 and 4
LossOfVoltage

The parameter list and their setting ranges are shown in the appendix.

The low voltage primary setting should be lower than the minimum system operating voltage, U_{min}. Consider an additional 10% for safety margin.

The primary set value Us_{PRIM} will be:

$$Us_{PRIM} = 0.9 \cdot U_{min} \quad \text{(Equation 1)}$$

The secondary setting value Us_{SEC} is:

$$Us_{SEC} = \frac{U_{SEC}}{U_{PRIM}} \cdot Us_{PRIM} \quad \text{(Equation 2)}$$

where U_{SEC} is the secondary rated voltage of the main VT and U_{PRIM} is the primary rated voltage of the main VT.

The relay setting value UPE< is given in percentage of the secondary base voltage value, U_{1b}, associated to the voltage transformer input U1. The value for UPE< is given from this formula:

$$UPE< = \frac{Us_{SEC}}{U_{1b}} \cdot 100 \quad \text{(Equation 3)}$$

and this is the value that has to be set in the relay.

5 Testing

The function can be disabled during the test mode during these conditions:

- When the function should be blocked under the testing conditions, select the functions that should be blocked under the menu:

  Test
  TestMode
  BlockFunctions

- The terminal is set to test mode by setting the Operation=On, which occurs under the menu:

  Test
  TestMode
  Operation

- The terminal is automatically set to test mode by applying the logical

1 to the TEST-INPUT functional input.

Important note: The function is blocked if the corresponding setting under the BlockFunctions menu remains on and the TEST-INPUT signal remains active.

The loss of voltage check protection function must not be blocked in order to be tested.

Check the operating values of the voltage measuring elements and corresponding functions during the commissioning and during regular maintenance tests. ABB Network Partner recommends, although it is not an absolute requirement, the use of the RTS 21 (FREJA) testing equipment for secondary injection-testing purposes.

Before testing, connect the testing equipment according to the valid terminal diagram of the specific REx 5xx terminal. Pay special attention to the correct connection of the input and output voltage terminals.

Follow these steps:

1.1 Check if the input and output logical signals in figure 1 are configured to the corresponding binary inputs and outputs of the tested terminal. If not, configure them for testing purposes. Set the operation of the LOV protection to On mode.

1.2 Set the input logical signals LOV--BLOCK, LOV--BC, LOV--VTSU to the logical zero. Supply a three phase rated voltage in all three phases and note on the local HMI that the LOV--TRIP logical signal is equal to the logical 0. Values of the logical signals belonging to the loss of voltage protection are available under menu tree:

Service Report
Functions
LossOfVoltage
FuncOutputs

1.3 Suddenly disconnect the voltage in all three phases and observe the LOV--TRIP pulse signal: after 7 seconds it should appear to the HMI. Its duration should be about 150 ms.

1.4 Increase the measured voltages to their rated values and decrease them again to zero within an interval shorter than 3 seconds. No LOV--TRIP signal should appear.

1.5 Increase the measured voltages to their rated values for at least 10 seconds. Instantaneously disconnect one phase and after an interval longer than 10 seconds, also disconnect the remaining two phases. No LOV--TRIP signal should appear.

1.6 Increase the measured voltages to their rated values for at least ten seconds. Apply the rated dc voltage to the binary input connected to the function input LOV--BC. Simultaneously disconnect all the three phase voltages from the terminal. No LOV--TRIP signal should appear. Disconnect the dc voltage from the LOV--BC input.

1.8 Increase the measured voltages to their rated values for at least ten seconds. Apply the rated dc voltage to the binary input connected to the function input LOV--VTSU. Simultaneously disconnect all the three phase voltages from the terminal. No LOV--TRIP signal should appear. Disconnect the dc voltage from the LOV--VTSU input.

1.9 Increase the measured voltages to their rated values for at least ten seconds. Apply the rated dc voltage to the binary input connected to the function input LOV--BLOCK. Simultaneously disconnect all the three phase voltages from the terminal. No LOV--TRIP signal should appear. Disconnect the dc voltage from the LOV--BLOCK input

2.0 Configure (if necessary) the terminal to its normal operating configuration.

6 Appendix

6.1 Function block

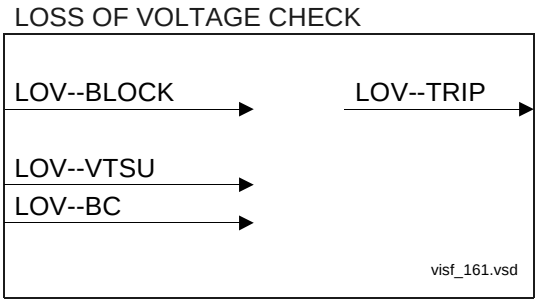

6.2 Function block diagram

LOV - LOSS OF VOLTAGE CHECK FUNCTION

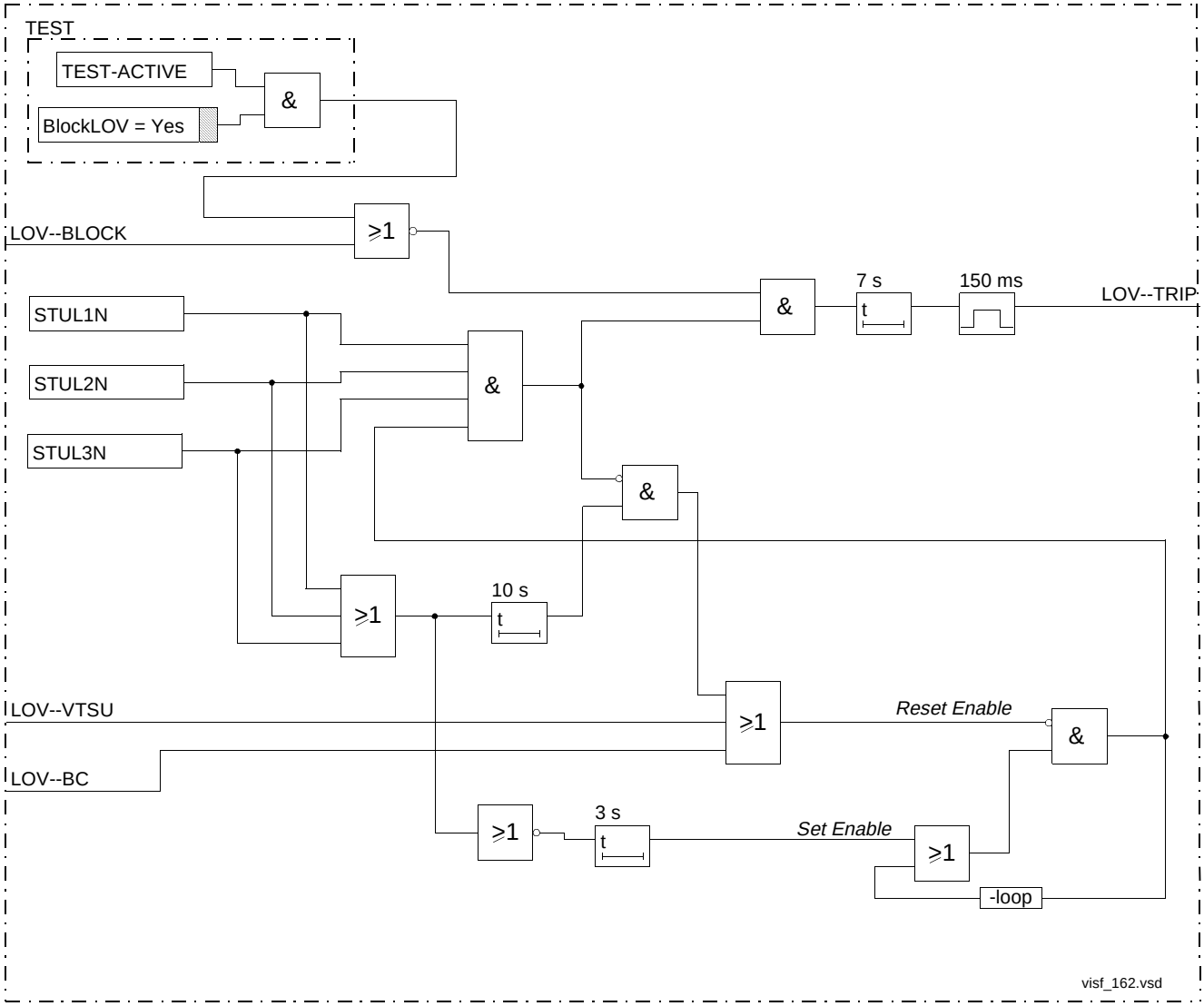

6.3 Signal list

Block	Signal	Type	Description
LOV--	BLOCK	IN	Block of loss of voltage function
LOV--	VTSU	IN	Block from voltage circuit supervision
LOV--	BC	IN	Breaker closing command
LOV--	TRIP	OUT	Trip by loss of voltage function

6.4 Setting table

Parameter	Range	Unit	Default	Parameter description
Operation	Off, On		Off	Loss of voltage function On/Off
UPE<	10-100	%	70	Operating phase voltage, as a percentage of U1b

1 Application

Different protection functions within the REx 5xx protection, control and monitoring terminals operate on the basis of the measured voltage in the relay point. Examples are: distance protection function, undervoltage measuring function, and voltage check for the weak infeed logic.

These functions can operate unnecessarily if a fault occurs in the secondary circuits between the voltage instrument transformers and the terminal.

It is possible to use different measures to prevent such unwanted operations. Miniature circuit breakers in the voltage measuring circuits, located as close as possible to the voltage instrument transformers, are one of them. Separate fuse-failure measuring relays or elements within the protection and monitoring devices are another possibility. These solutions are combined to get the best possible effect in the fuse failure supervision function (FUSE) of REx 5xx terminals.

The fuse-failure supervision function as built into the REx 5xx terminals has these possibilities; it can operate:

- On the basis of external binary signals from the miniature circuit breaker or from the line disconnector. The first case influences the operation of all voltage-dependent functions while the second one does not affect the impedance measuring functions.
- On the basis of the negative-sequence measuring quantities: a high value of voltage $3 \cdot U_2$ without the presence of the negative-sequence current $3 \cdot I_2$.

Because of the negative sequence detection algorithm, this function is recommended for terminals used in isolated or high-impedance earthed networks.

2 Theory of operation

The current and voltage measuring elements within one of the built-in digital signal processors continuously measure the currents and voltages in all three phases and calculate:

- The negative-sequence current $3 \cdot I_2$
- The negative-sequence voltage $3 \cdot U_2$

comparing them with their respective set values 3I2< and 3U2> .

Fourier's recursive filter filters the current and voltage signals, and a separate trip counter prevents high overreaching of the measuring elements. The signal STNEG is set to 1, if the negative sequence measured voltage exceeds its set value 3U2> and if the negative sequence measured current does not exceed its pre-set value 3I2<.

Signals STUL1N, STUL2N and STUL3N are related to phase to earth voltages and become 1 when the respective phase voltage is lower then the set value. The set value (U<) is chosen in the dead line detection function, that is always present in the terminal when the fuse failure supervision is present.

3 Design

The simplified logic diagram of the fuse failure supervision function is shown in figure 1.

The function is disabled (blocked) if:

- The terminal is in TEST status (TEST-ACTIVE is high) and the function has been blocked from the HMI (BlockFUSE=Yes)
- The input signal FUSE-BLOCK is high

FUSE-BLOCK signal is a general purpose blocking signal of the fuse failure supervision function. It can be connected to a binary input of the terminal in order to receive a block command from external devices or can be software connected to other internal functions of the terminal itself in order to receive a block command from internal functions. Through OR gate it can be connected to both binary inputs and internal function outputs.

Function input signal FUSE-MCB is supposed to be connected via a terminal binary input to the N.C. auxiliary contact of the miniature circuit-breaker protecting the VT secondary circuit.

Function input signal FUSE-DISC is supposed to be connected via a terminal binary input to the N.C. auxiliary contact of the line disconnector.

The function output FUSE-VTSU can be used for blocking the voltage related measuring functions (undervoltage protection, synchrocheck etc.) except for the impedance protection.

Function output FUSE-VTSZ can be used for blocking the impedance protection function.

The FUSE-MCB signal sets the output signals FUSE-VTSU and FUSE-VTSZ in order to block all the voltage related functions when the MCB is open. The additional drop-off timer of 150 ms prolongs the presence of FUSE-MCB signal to prevent the unwanted operation of voltage dependent function due to non simultaneous closing of the main contacts of the miniature circuit breaker.

The FUSE-DISC signal sets the output signal FUSE-VTSU in order to block the voltage related functions when the line disconnector is open. The impedance protection function is not affected by the position of the line disconnector.

The function input signal FUSE-DLCND is related to the dead line condition detection. It has to be connected to the output signal of the dead line condition function DLD-STPH (dead phase condition detected). This signal is activated from the dead line condition function when the voltage and the current in at least one phase are below their respective setting values. It prevents the blocking of the impedance protection by a fuse failure detection during dead line condition (that occurs also during single pole

auto-reclosing). The 200 ms drop-off timer prolongs the dead line condition after the line-energization in order to prevent the blocking of the impedance protection for unequal pole closing.

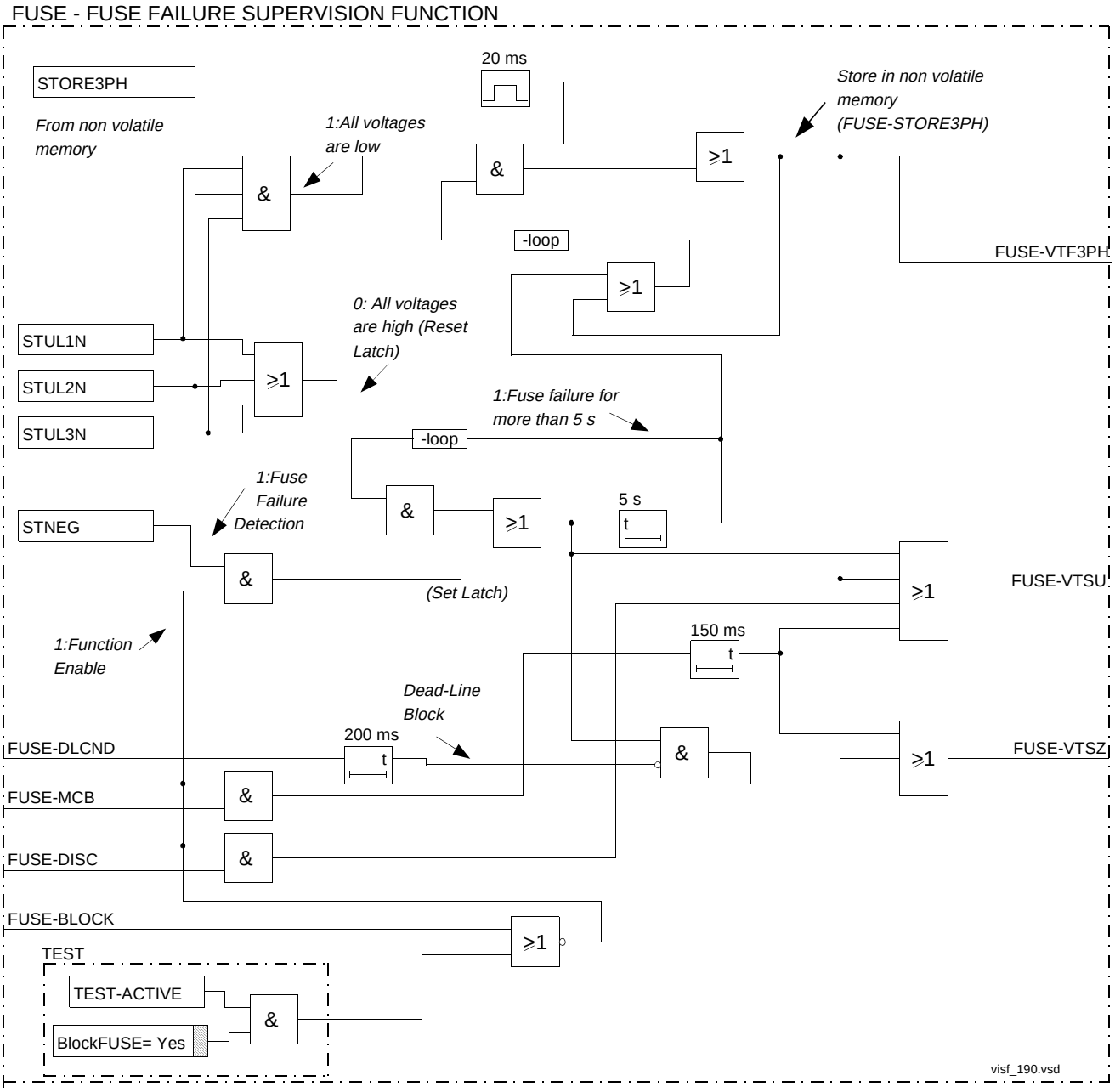

Figure 1: Simplified logic diagram for fuse failure supervision function

If a fuse failure condition is detected for more then five seconds and at least one of the phases has a low phase to earth voltage, then the fuse failure condition is latched: signal FUSE-VTSU is turned high, if there is no dead line condition also FUSE-VTSZ is high; if all the three phases have no voltage (STUL1N = STUL2N = STUL3N = 1) then the output signal FUSE-VTF3PH is turned high.

The output signal FUSE-VTF3PH is high if the fuse failure condition is detected for 5 seconds and all the three measured voltages are low.

Fuse failure condition is unlatched when the normal voltage conditions are restored (STUL1N = STUL2N = STUL3N = 0).

Fuse failure condition is stored in the non volatile memory of the terminal. In the new start-up procedure the terminal checks the VTF3PH (STORE3PH) value in its non volatile memory and establishes the corresponding starting conditions.

4 Setting instructions

The operating value for the voltage check function (signals STUL1N, STUL2N, STUL3N) is the same as the operating value of the dead line detection function. The setting of the voltage minimum operating value U< occurs under the submenu:

Settings
Functions
Group n
DeadLineDet

Some values of the negative-sequence voltages and currents always exist due to different non-symmetries in the primary system and differences in the current and voltage instrument transformers. The minimum value for the operation of the current and voltage measuring elements must always be set with a safety margin of 10 to 15%, depending on the system operating conditions.

Pay special attention to the dissymmetry of the measuring quantities when the function is used on longer untransposed lines, on multicircuit lines, and so on.

The parameter list and their setting ranges are shown in the appendix.

4.1 Setting of negative sequence voltage 3U2>

The relay setting value 3U2> is given in percentage of the secondary base voltage value, U_{1b}, associated to the voltage transformer input U1. If Us_{SEC} is the secondary setting value of the relay, then the value for 3U2> is given from this formula:

$$3U2> = \frac{Us_{SEC}}{U_{1b}} \cdot 100 \qquad \text{(Equation 1)}$$

and this is the value that has to be set in the relay.

Set this value under the setting menu:

Settings
Functions
Group n
FuseFailure

on the value 3U2>.

4.2 Setting of negative sequence current 3I2<

The relay setting value 3I2< is given in percentage of the secondary base current value, I_{1b}, associated to the current transformer input I1. If Is_{SEC} is the secondary setting value of the relay, then the value for 3I2< is given from this formula:

$$3I2< = \frac{Is_{SEC}}{I_{1b}} \cdot 100 \qquad \text{(Equation 2)}$$

and this is the value that has to be set in the relay.

Set this value under the setting menu:

Settings
Functions
Group n
FuseFailure

on the value 3I2<.

5 Testing

It is possible to disable the function during the test mode under the following conditions:

- When the function should be blocked under the testing conditions. The selection of functions, which should be blocked is possible under the menu:

  Test
  TestMode
  BlockFunctions

- The terminal has been set into the test mode by setting the Operation=On. This selection takes place under the menu:

  Test
  TestMode
  Operation

- The terminal has been set automatically into test mode by applying the logical 1 to the TEST-INPUT functional input

Important note: The function will be blocked if the corresponding setting under the BlockFunctions menu remains on and the TEST-INPUT signal remains active.

The fuse failure supervision function must not be blocked in order to be tested.

Check the operation of the FUSE function during the commissioning and during regular maintenance tests. ABB Network Partner recommends, although it is not an absolute requirement, the use of the RTS 21 (FREJA) testing equipment for secondary injection testing purposes.

The test equipment used should be able to provide an independent three-phase supply of voltages and currents to the tested terminal. It must be possible to separately change the values of voltages, currents, and phase angles among them independent of each other, for each phase. The test voltages and currents should have a common source, with very small content of higher harmonics. If the test equipment cannot indicate the phase angles between the measured quantities, a separate phase angle meter is needed.

The corresponding binary signals that inform the operator about the operation of the FUSE function are available on the local human-machine interface (HMI) unit under the menu:

Service Report
Functions
FuseFailure
FuncOutputs

The appendix reports the corresponding signals that display information on the operation of the FUSE function.

These steps are necessary for testing the FUSE function:

1.1 Check if the input and output logical signals as shown in figure 1 on page 127 are configured to the corresponding binary inputs and outputs of the tested terminal. If not, configure them for testing purposes. Set the operation of FUSE protection to On mode under the submenu:

Settings
Functions
Group n
FuseFailure
NegativeSeq

1.2 Connect the three-phase testing equipment to the tested terminal, and simulate normal operating conditions with the three-phase currents in phase with their corresponding phase voltages and with all of them equal to their rated values.

1.3 Connect the nominal dc voltage to the FUSE-DISC binary input, and check that the signal FUSE-VTSU appears with almost no time delay. No signals FUSE-VTSZ and FUSE-VTF3PH should appear on the terminal. Only the distance protection function operates. No other voltage-dependent functions must operate. Disconnect the dc voltage from the FUSE-DISC binary input terminal.

1.4 Connect the nominal dc voltage to the FUSE-MCB binary input and check that the FUSE-VTSU and FUSE-VTSZ signals appear without any time delay. No voltage-dependent functions must operate. Disconnect the dc voltage from the FUSE-MCB binary input terminal.

1.5 Disconnect one of the phase voltages and observe the logical output signals on the terminal binary outputs. FUSE-VTSU and FUSE-VTSZ signals should simultaneously appear.

1.6 After more than 5 seconds disconnect the remaining two phase voltages and all three currents. There should be no change in the high statuses of the output signals FUSE-VTSU and FUSE-VTSZ. The signal FUSE-VTF3PH will instead appear.

1.7 Simultaneously establish normal voltage and current operating conditions and observe the corresponding output signals. They should change to the logical 0 as follows:

- Signal FUSE-VTF3PH after about 25 ms
- Signal FUSE-VTSU after about 50 ms
- Signal FUSE-VTSZ after about 200 ms

1.8 Slowly decrease the measured voltage in one phase until the FUSE-VTSU signal appears. Record the measured voltage and calculate the corresponding negative-sequence voltage according to the equation (observe that the voltages in the equation are phasors):

$$3 \cdot \overline{U_2} = \overline{U_{L1}} + a^2 \cdot \overline{U_{L2}} + a \cdot \overline{U_{L3}} \qquad \text{(Equation 3)}$$

where:

$\overline{U_{L1}}$, $\overline{U_{L2}}$ and $\overline{U_{L3}}$ are the measured phase voltages

and

$$a = 1 \cdot e^{j\frac{2 \cdot \pi}{3}} = -0,5 + j\frac{\sqrt{3}}{2} \qquad \text{(Equation 4)}$$

Compare the result with the set value (consider that the set value 3U2> is in percentage of the base voltage U1b) of the negative-sequence operating voltage. The result should be within the ±5% limits of accuracy with the addition of declared accuracy for testing equipment.

1.9 Disconnect the testing equipment. Don’t forget to configure the terminal, if necessary, to its normal operating configuration.

6 Appendix

6.1 Function block

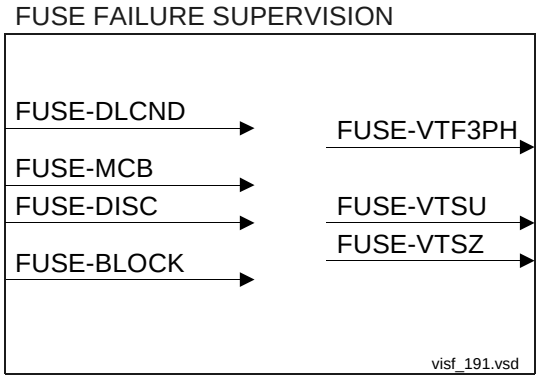

6.2 Function block diagram

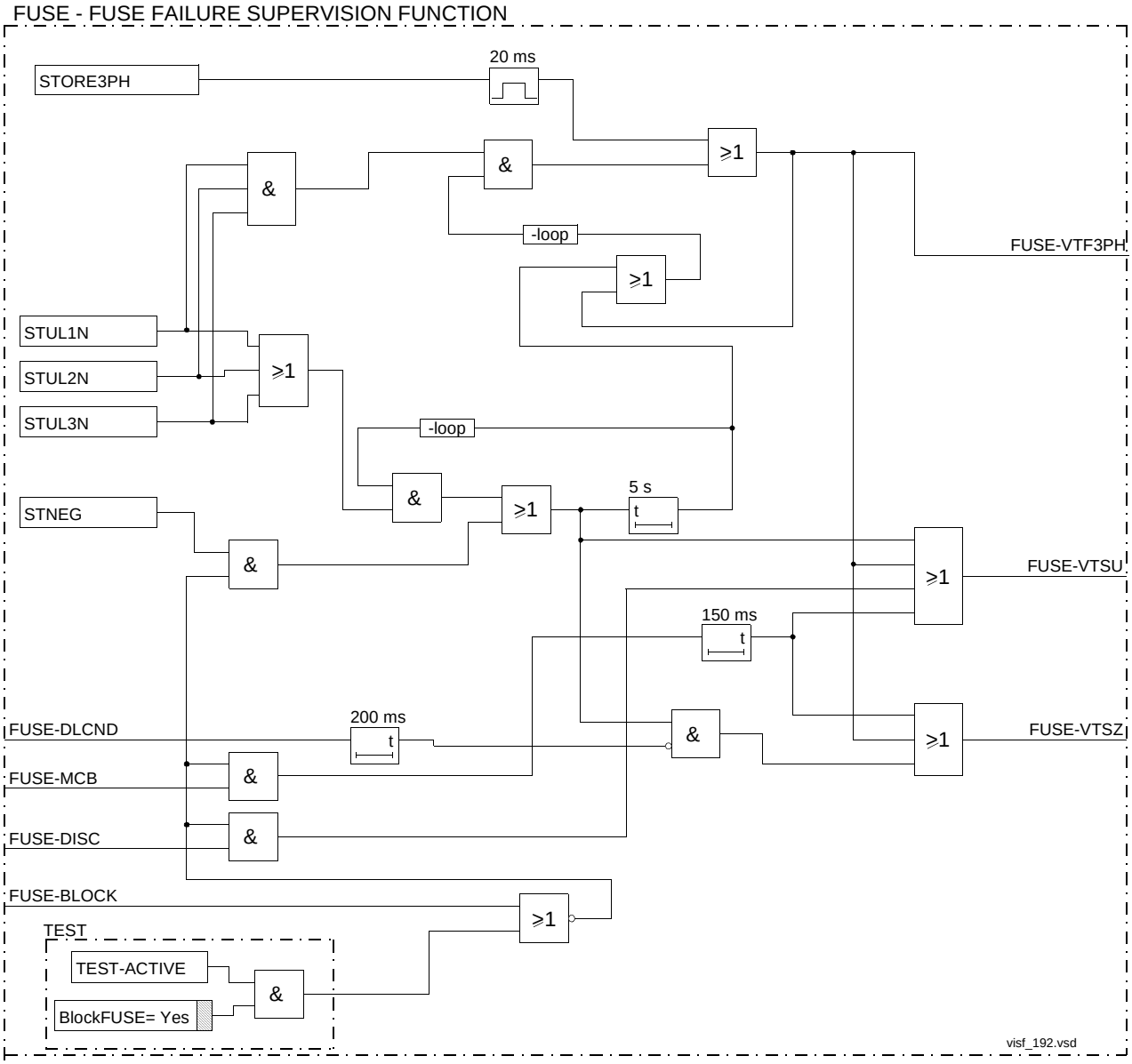

6.3 Signal lists

Block	Signal	Type	Description
FUSE-	DLCND	IN	Dead line condition
FUSE-	MCB	IN	Operation of MCB
FUSE-	DISC	IN	Line disconnector position
FUSE-	BLOCK	IN	Block of fuse failure function
FUSE-	VTF3PH	OUT	Detection of 3-phase fuse failure
FUSE-	VTSU	OUT	Block for voltage measuring functions
FUSE-	VTSZ	OUT	Block for impedance measuring functions

6.4 Setting table

Parameter	Range	Unit	Default	Parameter description
Nega-tiveSeq	Off, On		Off	Fuse failure negative sequence function On/Off
3U2>	10-50	%	10	Operating negative sequence voltage, as a percentage of U1b
3I2<	10-50	%	10	Operating negative sequence current, as a percentage of I1b

1 Application

Different protection functions within the REx 5xx protection, control and monitoring terminals operate on the basis of the measured voltage in the relay point. Examples are: distance protection function, undervoltage measuring function, and voltage check for the weak infeed logic.

These functions can operate unnecessarily if a fault occurs in the secondary circuits between the voltage instrument transformers and the terminal.

It is possible to use different measures to prevent such unwanted operations. Miniature circuit breakers in the voltage measuring circuits, located as close as possible to the voltage instrument transformers, are one of them. Separate fuse-failure measuring relays or elements within the protection and monitoring devices are another possibility. These solutions are combined to get the best possible effect in the fuse failure supervision function (FUSE) of REx 5xx terminals.

The fuse-failure supervision function as built into the REx 5xx terminals has these possibilities; it can operate:

- On the basis of external binary signals from the miniature circuit breaker or from the line disconnector. The first case influences the operation of all voltage-dependent functions while the second one does not affect the impedance measuring functions.
- On the basis of the zero-sequence measuring quantities: a high value of voltage $3 \cdot U_0$ without the presence of the residual current $3 \cdot I_0$.

2 Theory of operation

The current and voltage measuring elements within one of the built-in digital signal processors continuously measure the currents and voltages in all three phases and calculate:

- The zero-sequence current $3 \cdot I_0$
- The zero-sequence voltage $3 \cdot U_0$

comparing them with their respective set values 3I0< and 3U0> .

Fourier's recursive filter filters the current and voltage signals, and a separate trip counter prevents high overreaching of the measuring elements. The signal STZERO is set to 1, if the zero sequence measured voltage exceeds its set value 3U0> and if the zero sequence measured current does not exceed its pre-set value 3I0<.

Signals STUL1N, STUL2N and STUL3N are related to phase to earth voltages and become 1 when the respective phase voltage is lower then the set value. The set value (U<) is chosen in the dead line detection function, that is always present in the terminal when the fuse failure supervision is present.

3 Design

The simplified logic diagram of the fuse failure supervision function is shown in figure 1.

The function is disabled (blocked) if:

- The terminal is in TEST status (TEST-ACTIVE is high) and the function has been blocked from the HMI (BlockFUSE=Yes)
- The input signal FUSE-BLOCK is high

The FUSE-BLOCK signal is a general purpose blocking signal of the fuse failure supervision function. It can be connected to a binary input of the terminal in order to receive a block command from external devices or can be software connected to other internal functions of the terminal itself in order to receive a block command from internal functions. Through OR gate it can be connected to both binary inputs and internal function outputs.

The function input signal FUSE-MCB is supposed to be connected via a terminal binary input to the N.C. auxiliary contact of the miniature circuit-breaker protecting the VT secondary circuit.

The function input signal FUSE-DISC is supposed to be connected via a terminal binary input to the N.C. auxiliary contact of the line disconnector.

The function output FUSE-VTSU can be used for blocking the voltage related measuring functions (undervoltage protection, synchrocheck etc.) except for the impedance protection.

The function output FUSE-VTSZ can be used for blocking the impedance protection function.

The FUSE-MCB signal sets the output signals FUSE-VTSU and FUSE-VTSZ in order to block all the voltage related functions when the MCB is open. The additional drop-off timer of 150 ms prolongs the presence of FUSE-MCB signal to prevent the unwanted operation of voltage dependent function due to non simultaneous closing of the main contacts of the miniature circuit breaker.

The FUSE-DISC signal sets the output signal FUSE-VTSU in order to block the voltage related functions when the line disconnector is open. The impedance protection function is not affected by the position of the line disconnector.

The function input signal FUSE-DLCND is related to the dead line condition detection. It has to be connected to the output signal of the dead line condition function DLD-STPH (dead phase condition detected). This signal is activated from the dead line condition function when the voltage and the current in at least one phase are below their respective setting values. It prevents the blocking of the impedance protection by a fuse failure detection during dead line condition (that occurs also during single pole

auto-reclosing). The 200 ms drop-off timer prolongs the dead line condition after the line-energization in order to prevent the blocking of the impedance protection for unequal pole closing.

If the fuse failure condition is detected for more then five seconds and at least one of the phases has a low phase to earth voltage, then the fuse failure condition is latched: signal FUSE-VTSU is turned high, if there is no dead line condition also FUSE-VTSZ is high; if all the three phases have no voltage (STUL1N = STUL2N = STUL3N = 1) then the output signal FUSE-VTF3PH is turned high.

The output signal FUSE-VTF3PH is high if the fuse failure condition is detected for 5 seconds and all the three measured voltages are low.

The fuse failure condition is unlatched when the normal voltage conditions are restored (STUL1N = STUL2N = STUL3N = 0).

The fuse failure condition is stored in the non volatile memory of the terminal. In the new start-up procedure the terminal checks the VTF3PH (STORE3PH) value in its non volatile memory and establishes the corresponding starting conditions.

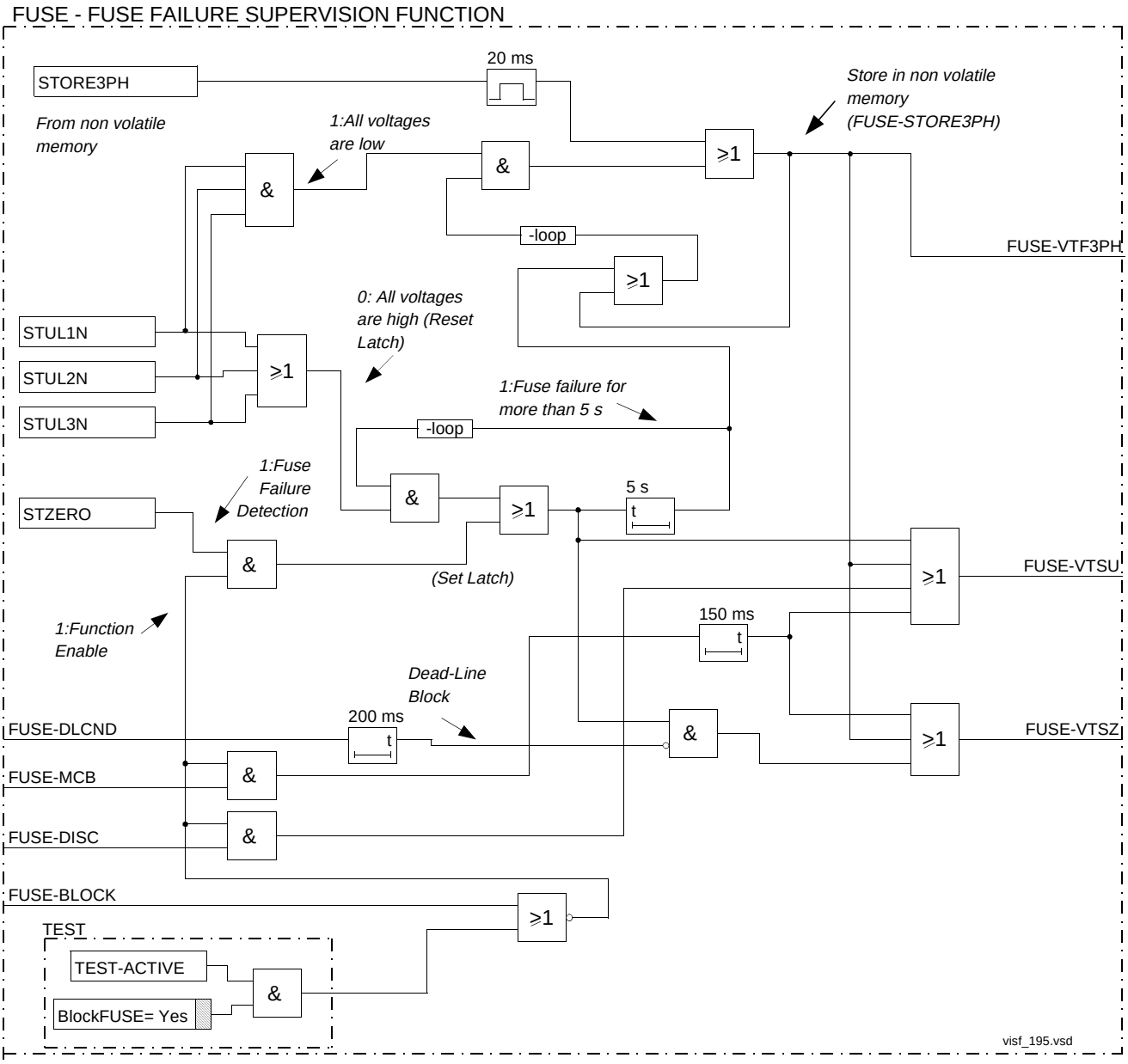

Figure 1: Simplified logic diagram for fuse failure supervision function

4 Setting instructions

The operating value for the voltage check function (signals STUL1N, STUL2N, STUL3N) is the same as the operating value of the dead line detection function. The setting of the voltage minimum operating value U< occurs under the submenu:

Settings
Functions
Group n
DeadLineDet

Some values of the zero-sequence voltages and currents always exist due to different non-symmetries in the primary system and differences in the current and voltage instrument transformers. The minimum value for the operation of the current and voltage measuring elements must always be set with a safety margin of 10 to 15%, depending on the system operating conditions.

Pay special attention to the dissymmetry of the measuring quantities when the function is used on longer untransposed lines, on multicircuit lines, and so on.

The parameter list and their setting ranges are shown in the appendix.

4.1 Setting of zero sequence voltage 3U0>

The relay setting value 3U0> is given in percentage of the secondary base voltage value, U_{1b}, associated to the voltage transformer input U1. If Us_{SEC} is the secondary setting value of the relay, then the value for 3U0> is given from this formula:

$$3U0> = \frac{Us_{SEC}}{U_{1b}} \cdot 100 \qquad \text{(Equation 1)}$$

and this is the value that has to be set in the relay.

Set this value under the setting menu:

Settings
Functions
Group n
FuseFailure

on the value 3U0>.

4.2 Setting of zero sequence current 3I0<

The relay setting value 3I0< is given in percentage of the secondary base current value, I_{1b}, associated to the current transformer input I1. If Is_{SEC} is the secondary setting value of the relay, then the value for 3I0< is given from this formula:

$$3I0< = \frac{Is_{SEC}}{I_{1b}} \cdot 100 \qquad \text{(Equation 2)}$$

and this is the value that has to be set in the relay.

Set this value under the setting menu:

Settings
Functions
Group n
FuseFailure

on the value 3I0<.

5 Testing

It is possible to disable the function during the test mode under the following conditions:

- When the function should be blocked under the testing conditions. The selection of functions, which should be blocked is possible under the menu:

  Test
  TestMode
  BlockFunctions

- The terminal has been set into the test mode by setting the Operation=On. This selection takes place under the menu:

  Test
  TestMode
  Operation

- The terminal has been set automatically into test mode by applying the logical 1 to the TEST-INPUT functional input

Important note: The function will be blocked if the corresponding setting under the BlockFunctions menu remains on and the TEST-INPUT signal remains active.

The fuse failure supervision function must not be blocked in order to be tested.

Check the operation of the FUSE function during the commissioning and during regular maintenance tests. ABB Network Partner recommends, although it is not an absolute requirement, the use of the RTS 21 (FREJA) testing equipment for secondary injection testing purposes.

The test equipment used should be able to provide an independent three-phase supply of voltages and currents to the tested terminal. It must be possible to separately change the values of voltages, currents, and phase angles among them independent of each other, for each phase. The test voltages and currents should have a common source, with very small content of higher harmonics. If the test equipment cannot indicate the phase angles between the measured quantities, a separate phase angle meter is needed.

The corresponding binary signals that inform the operator about the operation of the FUSE function are available on the local human-machine interface (HMI) unit under the menu:

Service Report
Functions
FuseFailure
FuncOutputs

The appendix reports the corresponding signals that display information on the operation of the FUSE function.

These steps are necessary for testing the FUSE function:

1.1 Check if the input and output logical signals as shown in figure 1 on page 138 are configured to the corresponding binary inputs and outputs of the tested terminal. If not, configure them for testing purposes. Set the operation of FUSE protection to On mode under the submenu:

Settings
Functions
Group n
FuseFailure
ZeroSeq

1.2 Connect the three-phase testing equipment to the tested terminal, and simulate normal operating conditions with the three-phase currents in phase with their corresponding phase voltages and with all of them equal to their rated values.

1.3 Connect the nominal dc voltage to the FUSE-DISC binary input, and check that the signal FUSE-VTSU appears with almost no time delay. No signals FUSE-VTSZ and FUSE-VTF3PH should appear on the terminal. Only the distance protection function operates. No other voltage-dependent functions must operate. Disconnect the dc voltage from the FUSE-DISC binary input terminal.

1.4 Connect the nominal dc voltage to the FUSE-MCB binary input and check that the FUSE-VTSU and FUSE-VTSZ signals appear without any time delay. No voltage-dependent functions must operate. Disconnect the dc voltage from the FUSE-MCB binary input terminal.

1.5 Disconnect one of the phase voltages and observe the logical output signals on the terminal binary outputs. FUSE-VTSU and FUSE-VTSZ signals should simultaneously appear.

1.6 After more than 5 seconds disconnect the remaining two phase voltages and all three currents. There should be no change in the high statuses of the output signals FUSE-VTSU and FUSE-VTSZ. The signal FUSE-VTF3PH will instead appear.

1.7 Simultaneously establish normal voltage and current operating conditions and observe the corresponding output signals. They should change to the logical 0 as follows:

- Signal FUSE-VTF3PH after about 25 ms
- Signal FUSE-VTSU after about 50 ms
- Signal FUSE-VTSZ after about 200 ms

1.8 Slowly decrease the measured voltage in one phase until the FUSE-VTSU signal appears. Record the measured voltage and calculate the corresponding zero-sequence voltage according to the equation (observe that the voltages in the equation are phasors):

$$3 \cdot \overline{U_0} = \overline{U_{L1}} + \overline{U_{L2}} + \overline{U_{L3}} \quad \text{(Equation 3)}$$

where:

$\overline{U_{L1}}$, $\overline{U_{L2}}$ and $\overline{U_{L3}}$ are the measured phase voltages

Compare the result with the set value (consider that the set value 3U0> is in percentage of the base voltage U1b) of the zero-sequence operating voltage. The result should be within the ±5% limits of accuracy with the addition of declared accuracy for testing equipment.

1.9 Disconnect the testing equipment. Don't forget to configure the terminal, if necessary, to its normal operating configuration.

6 Appendix

6.1 Function block

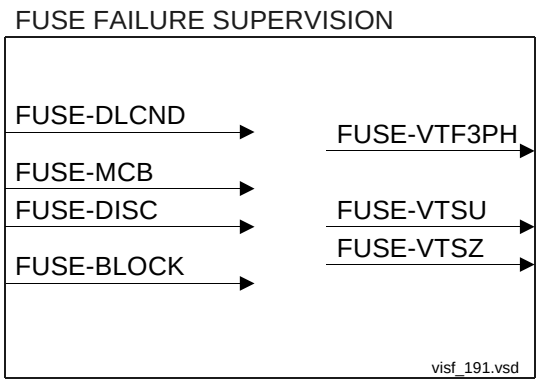

6.2 Function block diagram

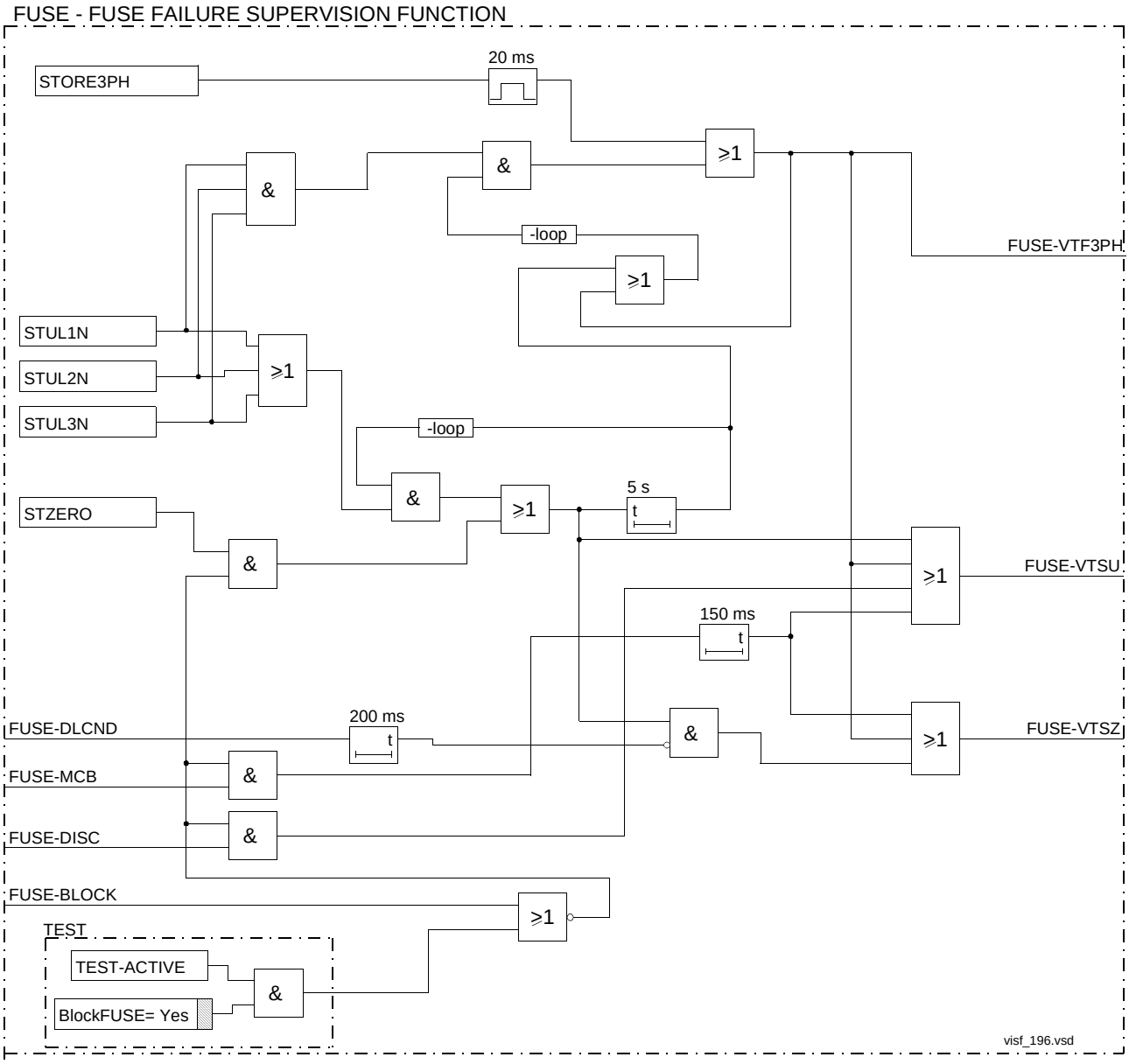

6.3 Signal list

Block	Signal	Type	Description
FUSE-	DLCND	IN	Dead line condition
FUSE-	MCB	IN	Operation of MCB
FUSE-	DISC	IN	Line disconnector position
FUSE-	BLOCK	IN	Block of fuse failure function
FUSE-	VTF3PH	OUT	Detection of 3-phase fuse failure
FUSE-	VTSU	OUT	Block for voltage measuring functions
FUSE-	VTSZ	OUT	Block for impedance measuring functions

6.4 Setting table

Parameter	Range	Unit	Default	Parameter description
ZeroSeq	Off, On		Off	Fuse failure zero sequence function On/Off
3U0>	10-50	%	10	Operating zero sequence voltage, as a percentage of U1b
3I0<	10-50	%	10	Operating zero sequence current, as a percentage of I1b

1 Introduction

The apparatus control function is a program supervising operation of a set of high-voltage apparatuses within a bay. Apparatuses in the form of breakers, disconnectors, and earthing switches.

Figure 1: gives an overview from what places the apparatus control function receive commands. Orders to operate an apparatus can come from the CC (Control Centre), the station HMI, or the local back-up panel (via the I/O).

When operating from the local back-up panel, the apparatus control function can be bypassed. The back-up panel is hard wired to the apparatuses for this purpose.

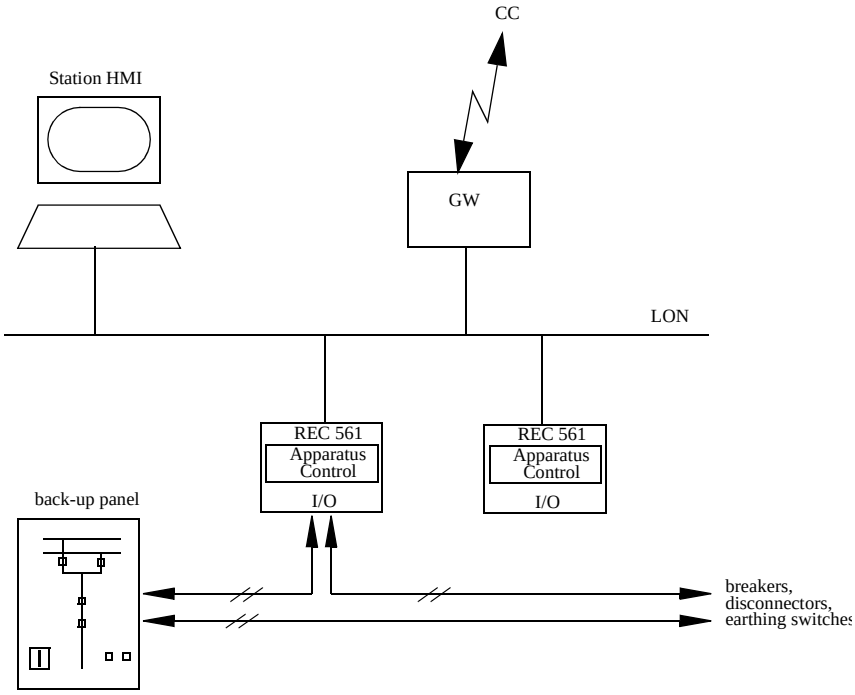

Figure 1: Overview of the apparatus control functions

Features in the apparatus control function:

- Supervision of valid operator place (one operator place at a time)
- Each apparatus are prepared to be included in a sequence
- Each apparatus can be interlocked
- The breakers can be connected to synchro-check/phasing function
- Reservation of bays
- Supervision of operating apparatus

2 Application

2.1 General

A bay can handle, for examples a power line, a transformer, a reactor, or a capacitor bank. The different high-voltage apparatuses within the bay level can be operated directly by the operator or indirectly by sequences. The different apparatuses can also be operated automatically.

Because a high-voltage apparatus can be allocated to many functions within a Substation Automation system, the object-oriented approach with an internal module that handles the interaction and status of each process object ensures consistency in the process information used by higher-level control functions.

High-voltage apparatuses such as breakers and disconnectors are controlled and supervised by one software module each. Because the number and type of signals connected to a breaker and a disconnector are almost the same, the same software is used to handle these two types of apparatuses.

The software module is connected to the physical process unit in the switchyard by a number of digital inputs and outputs. Special function blocks were created for making bay and apparatus control programs as efficient as possible. Four types of function blocks were created to cover most of the control and supervision within the bay.

The different functions included in the apparatus control are described below.

2.2 Operator place

The apparatus can be controlled from three different operator places:

- Remote
- Station
- Local

The operator places have different priorities:

- Local (highest)
- Station
- Remote (lowest)

Normally, only one operator place is valid at a time. But the user can define that more than one operator place is valid at the same time.

The remote operator place is assigned by the station operator. When local operator place is deactivated (by the local operator) previous operator place becomes valid.

When the operator place is established, a selection of the apparatus can be made. This is possible in two different ways only, depending on the select/execute principle. Either there is one (close or open) selection input set, followed by simultaneous setting of the execute inputs.

Or if the other principle is used, setting of both selection inputs (close and open select) simultaneously followed by the direction (close or open) on the execute input. Any other combination causes a reset of the operation.

Because both select/execute principles are supported from the operator point of view, two selection and two execute inputs are implemented.

To inform operator(s) at the station HMI that the apparatus is selected from another operator place, there are indications for each apparatus from which operator place (remote, station or local) it is selected. This is to inform that the apparatus is already selected; so a selection from that operator place is not possible.

When a selection is made, the apparatus control goes back into idle state for one of these reasons:

- After a successful operation
- No open or close command within specified time
- When reservation failed
- When an interlock occurred
- In blocking state
- Cancelling of the operation

When the apparatus is in idle state, it is possible to make a new selection from the valid operator place.

The operator can override the interlocking and/or the reservation from the station HMI and from the local operator place.

Of course arbitrarily orders can be sent to the REC 561, but only orders involved with the apparatus control are described below.

The apparatus control handles different kind of commands coming from different operator places. Interpret the local operator place as the back-up panel.

Remote
These commands are supported from remote operator place:

- Select, open/close
- Execute, open/close
- Cancel the selection

2.2.1 Station

These commands are supported from the station HMI:

- Select, open/close
- Execute, open/close
- Cancel the selection
- Block/deblock operation (per apparatus or bay)
- Override of reservation, interlocking and/or synchro-check/phasing
- Selection of operator place, station and/or remote
- Block/deblock updating of the position indications (per apparatus or bay)
- Setting of the position indication, open/close

2.2.2 Local

These commands are supported from the local HMI (back-up panel):

- Select, open/close
- Execute, open/close
- Override, reservation and/or interlocking
- Set operator place to local (switch on the back-up panel)

2.2.3 Automatic functions

An automatic program (placed in REC 561 or in external equipment) can be connected to the apparatus control. These signals can be connected to the apparatus control:

- Signals for select (open/close)
- Signals for execute (open/close)
- Cancel the selection
- Signal to reserve the apparatus for automatic functions. Used when the apparatus is included in a sequence

2.3 Selection and reservation

The purpose of the reservation and selection is to prevent double operation, either in the bay itself or in the complete station. For an operation in the bay, the reservation part always reserves the own bay. The engineer can include or exclude the part that reserves other bays.

The selection and reservation function consists of four parts:

1. Reservation of the own bay
2. Requesting reservation of other bays and handling of the acknowledgement signals
3. Replying to reservation requests
4. Permitting selection of apparatuses, depending on reservations

The selection and reservation function has two ways of starting. It starts when a request select signal is set in the own bay or when it receives a request for reservation from another bay.

The basic part of the reservation function is the reservation of the own bay. When the reservation is made, no acceptance of selections from other apparatuses can occur until all selection requests and reservations are cancelled.

Reservation of the other bays can also be made. A request for reservation is sent to these other bays. All bays should respond with an acknowledgement that they have reserved the own bay for operations. After reception of these signals, the reservation is considered successful and selection can proceed.

To prevent that a reservation is not reset when the reserve request becomes invalid, the reservation in the own bay and the acknowledgement to the other bays are cancelled when the cancel reservation timer has expired. The engineer should set this time to the operating time of the slowest not hand driven disconnector.

One timer supervises the reservation. If the time until a successful reservation is too long, the command sequence is stopped and an error message is generated.

It is possible to ignore failing reservation of other bays, if the operator wants to operate the apparatus. There is an override signal for this purpose.

Blocking of the reservation function is possible. With an override, the blocking of reservation on requests from inside the bay can be bypassed.

The reservation method is briefly explained in Figure 2: and follows these steps:

1. Select close/open from the station HMI
2. Reservation signal from the bay, which is to be operated
3. Transfer of acknowledgement and actual position indications from the other bays
4. Performed selection is presented on the station HMI
5. Execution of the command from the station HMI
6. Release (cancel) of the reservation

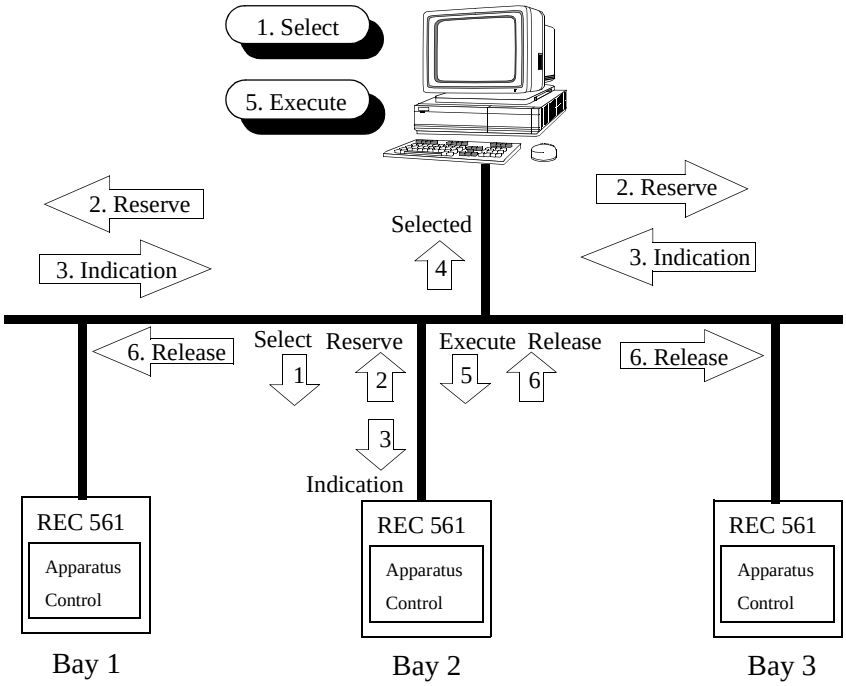

Figure 2: The reservation method

2.4 Automatic functions

The apparatus control has inputs to be connected to automatic functions, for example, slow autoreclose. When an automatic operation program must take control of an apparatus, it must check if this is permitted. Automatic operations are permitted when these conditions are fulfilled:

- Operator place is not local
- The apparatus is not selected
- The apparatus is not reserved
- The concerned apparatus is not blocked for operation
- Position indications are not blocked

The function, which operates automatically, also first determines if automatic operation is permitted.

2.5 Manual updating of indications

The position indications can be set manually. This feature is only operable from the station operator place.

There are two different independent functions given:

- Blocking of position updating from bay level (for all apparatus in the bay) and apparatus level (for each separate apparatus)
- Setting the drive position indication to a defined position by the operator. Mainly this is used in cases where the drive is in mainte-

nance or is disturbed and a defined end position is required. This function should cause an automatic update blocking of the position indication.

It can be chosen if blocked position indications cause a blocking of operation.

The supervision of the positions of an apparatus is based on the indications from the program and not the process status. This is to be able to simulate the positions when operating. In most cases, the process and indication status are identical.

2.6 Blockings

There are two bay-oriented blocking functions:

- Blocking of operation
- Blocking of updating of the position indication

Both of these different blockings are applicable for each apparatus separately and for the complete bay.

Blocking of operations can be separately performed for open/close.

Commands for the above described blockings are executed from the station HMI. Of course, arbitrary signals can be used to cause a blocking. But the explicit orders come from the station HMI.

2.7 Command supervision

Supervision functions stops the program from hanging in the middle of a command sequence. When the operation time is too long there is an error indication, and the command sequence resets. Such functions are:

- Supervision of the time between the selection is made and the following execute command. Adjustable time.
- Supervision of the time between the request to override and the following selection. The same timer as above.
- Supervision of abnormal status between the select and execute signals. If select is given for one direction, it must be followed by execute for both directions. Or, if the other principle is used, both selection inputs are followed by execute for the desired direction.

2.8 Supervision of operating apparatus

The control part should check the start conditions (for example, if there is a select for open when the position is open) for a valid selection, the movement itself, and correct completion. The corresponding status signals are given. The operation depends on the interlocking and blocking signals.

The supervision of the command output is made by the microcontroller on the output board.

A timer supervises the start of the drive. If the drive does not succeed in starting within a specified time, the command sequence resets, and an error indication is generated.

A timer supervises the movement of the drive. The maximum time can be set between the start and until the new position is reached.

When three phase indications are included, the pole-discordance function is included.

If blockings and interlocking allow operation, the drive can be operated when the starting-point is in the intermediate position.

2.9 Synchrocheck with phasing

Synchrocheck and phasing conditions can be considered when manually closing a breaker. The closing command at synchrocheck is released via the apparatus control, as for ordinary operations with the synchrocheck function excluded.

A timer supervises the synchrocheck and phasing function. If there is no synchronism within a specified time (after a closing command is given), there is a failed synchronisation.

The REC 561 can use a built-in synchrocheck and phasing function (also called internal synchrocheck and phasing) or use an external synchrocheck and phasing equipment, which are separate devices outside the REC 561. Two solutions are supported. The explicit closing command can come from the apparatus control itself (activated by the synchrocheck) or from the external synchrocheck equipment (activated by the apparatus control).

3 Design

3.1 General

The apparatus control function contains several function blocks. These function blocks are interconnected to form a control program reflecting the switchyard configuration.

A control program contains four main types of function blocks. The total number used depends on the switchyard configuration. Beside the main types of function blocks the program contains simple logic like AND/OR gates.

These four main types are called BAYCON, COMCON, SWICON, and BLKCON.

BAYCON:

- BAY CONtrol, used for bay-oriented functions (one per bay) such as reservation, valid operator place, and supervision of select relays (when used).

COMCON:

- COMmand CONtrol, used for each apparatus. Supervises commands coming from the different operator places. The interface to the operator places.

SWICON:

- SWItching CONtrol, used for each apparatus. Supervises operating apparatuses. The interface to the process.

BLKCON:

- BLocK CONtrol, universal element used for different kinds of blockings. One per bay and one per apparatus.

Figure 3 shows how the modules are combined:

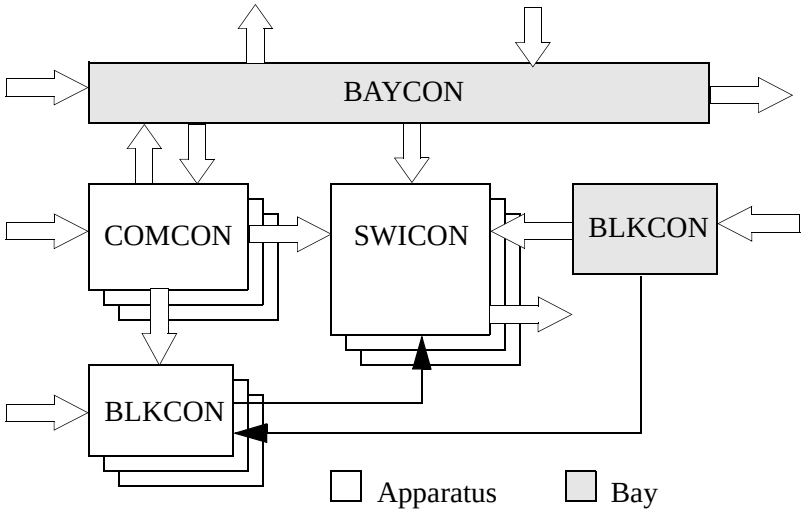

Figure 3: Overview of the interaction between the apparatus control modules

3.2 Standard modules

In REC 561, several standard function blocks are available. Below the different standard modules are described. The appendix describes input and output functions.

The BAYCON element consists of six variants, BAYCONA - BAYCONF.

BAYCONA: The normal version to be used.

BAYCONB: The same as A, but used when more than eight apparatuses are included in one bay, that is, when more than one BAYCON is used per bay.

BAYCONC: Is used if external selection relays with common feedback signals are used.

BAYCOND: The same as C, but used when more than eight apparatuses are included in one bay, that is, when more than one BAYCON is used per bay.

BAYCONE: Is used if external selection relays with individual feedback signals are used.

BAYCONF: The same as E, but used when more than eight apparatuses are included in one bay, that is, when more than one BAYCON is used per bay.

COMCON consists of only one variant.

The SWICON element consists of three variants, SWICONA - SWICONC.

SWICONA: Used for internal synchro-check function and three phase position indication. Normally used for circuit breakers.

SWICONB: Used for external synchro-check function and three phase position indication. Normally used for circuit breakers.

SWICONC: Used for single phase position indication. Normally used for disconnectors and earthing switches.

The BLKCON element consists of two variants, BLKCONL and BLKCONK.

BLKCONL: Normally used for the apparatuses.

BLKCONK: Normally used for the bays.

With control functions applicable for one bay or multiple bays, these standard modules are available:

Alternative for one bay and up to 14 apparatuses:

Normal use:

- 1 BAYCONA or
- 2 BAYCONB or

with external selection relays with common feedback signals:

- 1 BAYCONC or
- 2 BAYCOND or

with external selection relays with individual feedback signals:

- 1 BAYCONE or
- 2 BAYCONF

and either

- 2 SWICONA (internal synchro-check) or
- 2 SWICONB (external synchro-check)

and

- 14 SWICONC and
- 14 COMCON and
- 14 BLKCONL and
- 1 BLKCONK

Alternative for up to three bays and up to 24 apparatuses:

Normal use:

- 3 BAYCONA or
- 2 BAYCONA and 3 BAYCONB or
- 1 BAYCONA and 4 BAYCONB or

with external selection relays with common feedback signals:

- 3 BAYCONC or
- 2 BAYCONC and 3 BAYCOND or
- 1 BAYCONC and 4 BAYCOND or

with external selection relays with individual feedback signals:

- 3 BAYCONE or
- 2 BAYCONE and 3 BAYCONF or
- 1 BAYCONE and 4 BAYCONF

and either

- 4 SWICONA (internal synchro-check) or
- 4 SWICONB (external synchro-check)

and

- 24 SWICONC and
- 24 COMCON and
- 24 BLKCONL and
- 3 BLKCONK

Alternative for up to 12 bays and up to 24 apparatuses:

Normal use:

- 12 BAYCONA or
- 11 BAYCONA and 3 BAYCONB or
- 6 BAYCONA and 4 BAYCONB or

with external selection relays with common feedback signals:

- 12 BAYCONC or
- 11 BAYCONC and 3 BAYCOND or
- 6 BAYCONC and 4 BAYCOND or

with external selection relays with individual feedback signals:

- 12 BAYCONE or
- 11 BAYCONE and 3 BAYCONF or
- 6 BAYCONE and 4 BAYCONF

and either

- 12 SWICONA (internal synchro-check) or
- 12 SWICONB (external synchro-check)

and

- 14 SWICONC and
- 24 COMCON and
- 24 BLKCONL and
- 12 BLKCONK

The selection of control alternative is made during manufacturing. The selection of standard modules within each control alternative in REC 561 is made by a Function Selector tool included in the CAP 531 Configuration tool.

3.2.1 BAYCON

BAYCON handles bay control functions for operation of circuit breakers, disconnectors, or earthing switches in a Substation Automation system. It contains functionality for operator place choice, selection and reservation, selection relay supervision, and automatic functions. The total functionality depends on the variant of BAYCON. BAYCON handles maximum eight apparatuses. When a higher number is required, BAYCON can cooperate via information exchange with more BAYCON elements. The appendix shows the function blocks for the different variants with the name of the input and outputs and describes these signals.

3.2.1.1 Operator place choice

The operator place has three possibilities:

- Remote for control via remote communication
- Station HMI
- Local for control from a local panel

With the inputs (S_R, S_S, L_L) that are obtained, the desired operator place can be selected. It has a built-in priority with Local as highest, Station as intermediate, and Remote as lowest priority. When two or more inputs are set at the same time, the higher priority prevails. The inputs S_R and S_S have pulse inputs, but the L_L requires a steady signal. Figure 4: shows the logic:

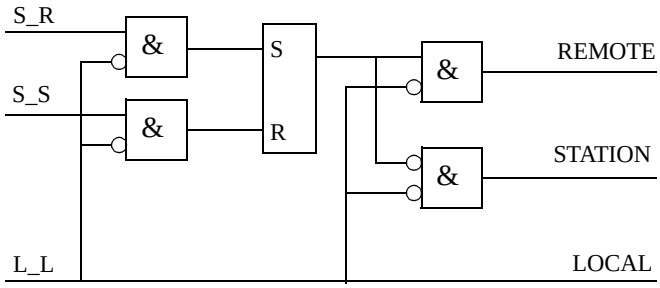

Figure 4: The operator place selection represented by logic

If the operator place selection is used without any priority and if the outputs REMOTE/STATION/LOCAL can be set independent of each other, the inputs REMOTE/STATION/LOCAL on COMCON can be used. See configuration example in the “Operator place selection” on page 177.

3.2.1.2 Reservation and selection

The purpose of the reservation and selection function is primarily to transfer interlocking information in a safe way and to prevent double operation in a bay, switchgear, or complete substation. The “Reservation function” on page 170 describes the method and the meaning of the inputs and outputs of BAYCON.

3.2.1.3 Information exchange

The input EXCH_IN and output EXCH_OUT are used for information exchange between BAYCON elements, when more than eight apparatuses in the same bay are used for control. The inputs and outputs of these elements are connected to each other in a loop as shown in Figure 5:.

The reservation and selection function has several bits available to request other BAYCONs to be reserved. These BAYCONs reply with an acknowledge through the same information exchange.

Only BAYCONB, BAYCOND, and BAYCONF have this functionality.

Figure 5: shows the information exchange connections for one bay with up to 24 apparatuses.

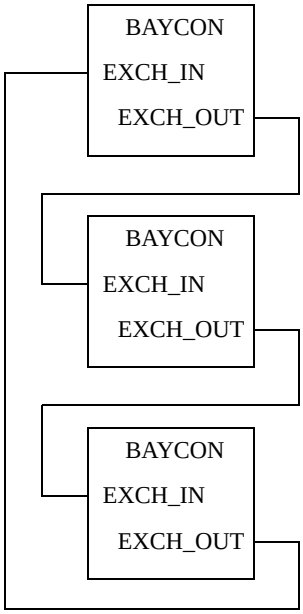

Figure 5: Connections between three BAYCONs intended to control up to 24 apparatuses

3.2.1.4 Selection relay supervision

The normal use of the command output module does not require any external relays. The supervision of the command relays on the output module is performed on the circuit board. The output module is normally connected directly to the switchyard without any extra relays.

To meet requirements of supervision of external selection relays, it is possible to connect these relays and supervise them by BAYCON in two ways:

- With common feedback signals from the selection relays (BAYCONC and BAYCOND) shown in Figure 6:
- With individual feedback signals (BAYCONE and BAYCONF) shown in Figure 7:

In the version in Figure 6:, the auxiliary contacts of the relays are wired to two inputs SEL_CH1 and SEL_CH2. A series connection of NC contacts connected to SEL_CH1 indicates that no relay is energised. A parallel connection of NO contacts connected to SEL_CH2 indicates that a relay is energised. BAYCON can now determine two types of errors. It can indicate that there is an error most probably at the system inputs with the BINPERR. BOUTERR indicates that the error is more likely to be found at the system outputs. When an error occurs, BAYCON cancels all operations. It lets the reservation go into a fail state, which causes resetting of the selection or acknowledgement.

In the other version in Figure 7:, BAYCON also checks every relay separately. It can then also determine if the wrong relay is energised. It indicates this with the BRLYERR output. When BAYCON has a valid reservation for a selection request and no error occurs, the selection relay supervision also sets an output to the requesting apparatus. This is a feedback selection (FDB_SELx), which indicates that the energising of the relay was correct. Now other software parts can give a close or open command.

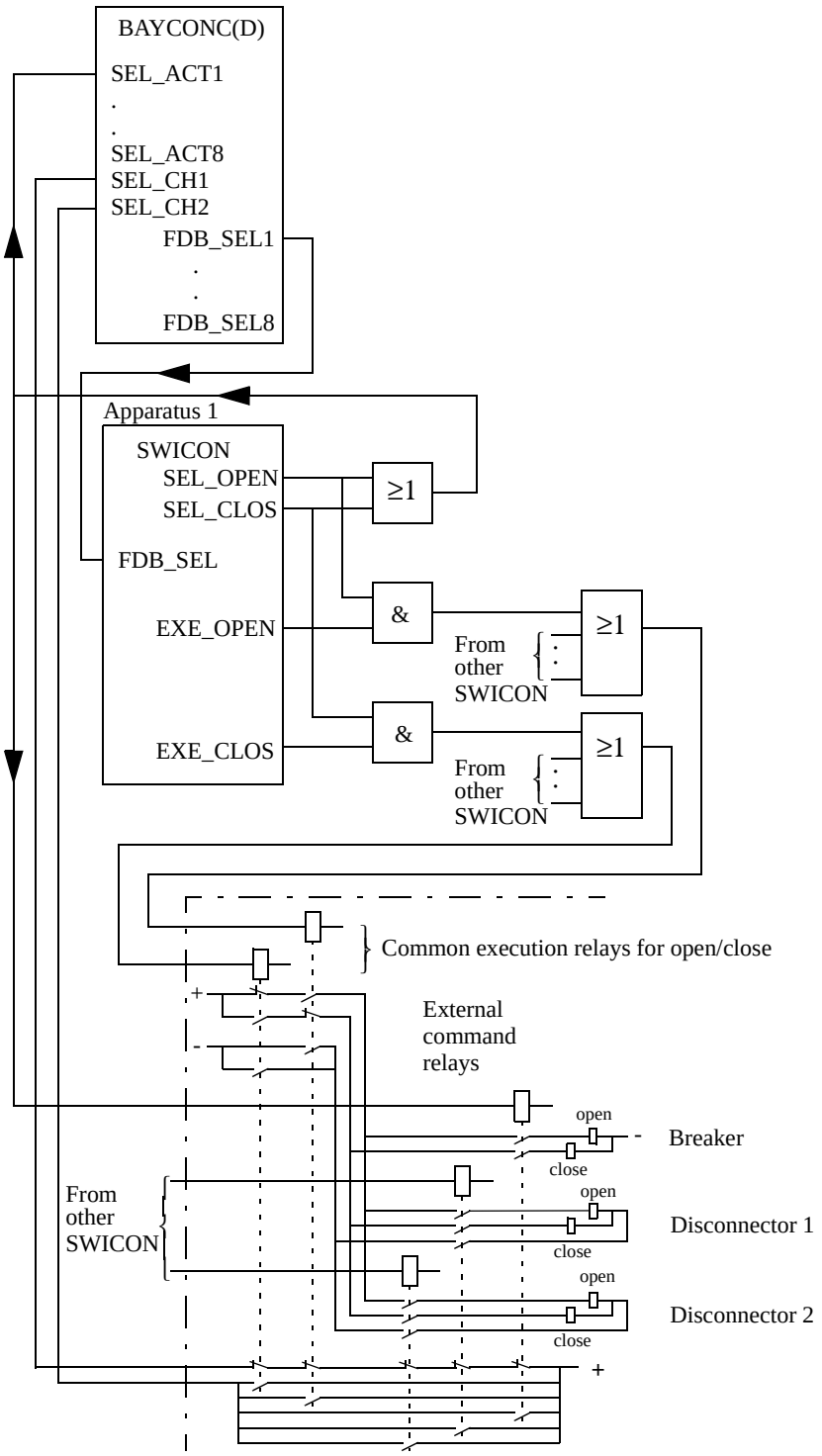

Figure 6: External selection relays with common feedback signals

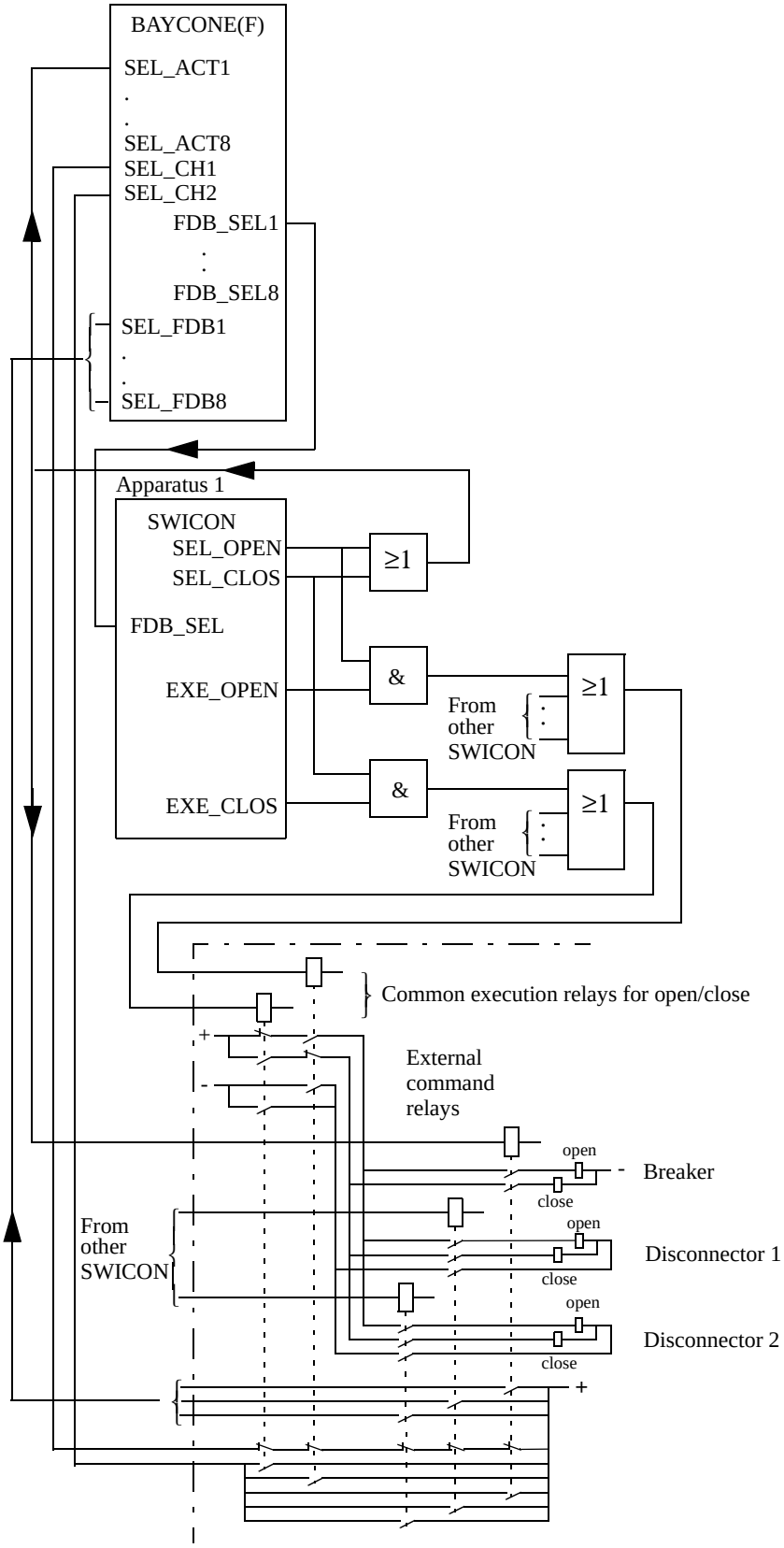

Figure 7: External selection relays with individual feedback signals

3.2.1.5 Automatic operation check

BAYCON has an amount of information that concerns the permission for automatic operation. This information is made available at the AU_OP_Vx outputs. Other elements can combine this information to a signal to an automatic function indicating permission for operation.

3.2.1.6 Parameters

T_CAN_RE

Time-out when the reset of the reservation acknowledgement is not done by the requesting bays, for example, because of communication error.

3.2.2 COMCON

COMCON acts as an interface between the possible operator places and the bay and the apparatus-control program. The validity of operator places is indicated on the REMOTE, STATION and LOCAL inputs. See the configuration example in “Operator place selection” on page 177. Only the signals from the operator place(s) that are valid are executed. When a change occurs, COMCON checks validity and forwards the commands to the outputs, if they are correct.

From station level, COMCON supports two ways of command executions:

1. From station HMI.
2. From remote gateway.

In the first way, that is normally used as standard from the station HMI (see item 1 in Figure 8:), only one selection input is activated, S_SEL_O or S_SEL_C. COMCON sets the RQ_SEL and the concerning direction output, OPEN or CLOSE. After the SELECT input is set by BAYCON, it allows the execute command S_OPEN and S_CLOSE to pass through. These execution inputs can be set at the same time or before SELECT is activated. Then the EXECUTE output is also activated. The “Reservation function” on page 170 describes the reservation method.

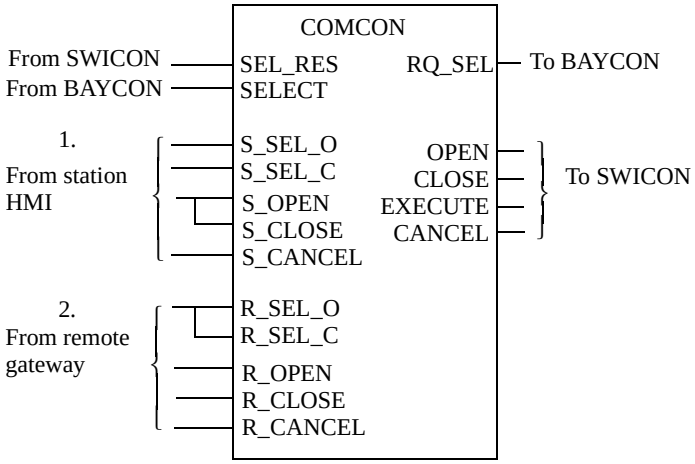

Figure 8: Example of different ways to connect the select and execute signals in COMCON

In the other way to select that is normally used as standard from remote gateway (see item 2 in Figure 8:), both selection inputs R_SEL_O and R_SEL_C are set at the same time. It sets only the RQ_SEL output. At reception of the SELECT, it allows the execute command R_OPEN or R_CLOSE to pass through. But now only one execute command R_OPEN or R_CLOSE can be given and COMCON passes the EXECUTE command with the OPEN/CLOSE directions.

The operation from a local operator place works in the same way as the both alternatives from station HMI and remote gateway, and can consequently be connected in a corresponding way.

When the operation has ended or failed, COMCON receives an input indication SEL_RES from SWICON. On reception of this input, it resets the stored commands and outputs.

An operation, which has already started with a selection, can be cancelled. The R/S_CANCEL inputs handle this. The output CANCEL is connected to the CANCEL input on SWICON to reset the started selection. COMCON also has an S/L_IR_OVR override input for station and local and an OVERRIDE output, which overrides the selection and reservation in other program parts.

COMCON also supports commands for blocking of operation and commands for manual position updating. These signals can come from station only and are being sent through to the rest of the program.

Besides from the three operator places, commands can also come from automatic functions. These inputs are handled in the same way as the normal operator place signals. For sequence switching, the apparatus can be reserved with the SEL_SEQ input.

For command supervision, COMCON has two time parameters. The supervision checks the time between select and execute signals and checks the response on a request for selection including reservation of other bays. When any of them is incorrect, COMCON indicates this with the LO_OP_T and RES_ERR outputs. Also, the CANCEL output gives a signal (pulse) to reset the selected command in SWICON.

3.2.2.1 Parameters

T_LO_OP

Maximum time between a select and the execute command coming from the operator. Also the maximum time between the request to override and the following select.

T_RES

Allowed time (for BAYCON) to make the reservation.

3.2.3 SWICON

SWICON handles basically two functions, indication and supervision of operation. The indication inputs can either be three phase including the pole discordance check (SWICONA and SWICONB) or the single phase

(SWICONC). The indication part checks the position indication information and gives indications (OX, CX) on the results. The POSIND_V input is used at external evaluations of the positions or at board error. POSIND_V = True means valid positions. The result of (OX, CX) is (0, 0) (for intermediate position or when POSIND_V = False). It also includes the function for manual position updating. The position indication can be set manually, and the updating from the process is stopped. Manual updating is indicated by MA_UPD_P.

The indication part has two timer parameters. The POS_ERR is activated momentary at the intermediate position (1, 1) but is delayed the T_POSERR time at the position (0, 0). The POL_DISC output is activated when a pole discordance is detected and the T_POL timer expires.

SWICON has inputs and outputs for selection and execution. In case the SWICON assumes the select-open or -close-before-execute principle (that is, either OPEN or CLOSE is set), the SELx (SELECT) signal from BAYCON energises the selection outputs of a given direction, SEL_OPEN or SEL_CLOS. After it has received the FDB_SEL signal, it proceeds with an EXECUTE command, which activates both EXE_OPEN and EXE_CLOS.

In case of the select-before-execute-open or -close principle, SWICON receives only a SELECT signal (that is, without the OPEN and CLOSE directions). Now it activates both the SEL_OPEN and SEL_CLOS selection outputs. After receiving a FDB_SEL feedback select, it waits for the EXECUTE command. This must now come together with the OPEN or CLOSE direction to activate either EXE_OPEN or EXE_CLOS. The connections between SWICON and the output board are shown in Figure 9:.

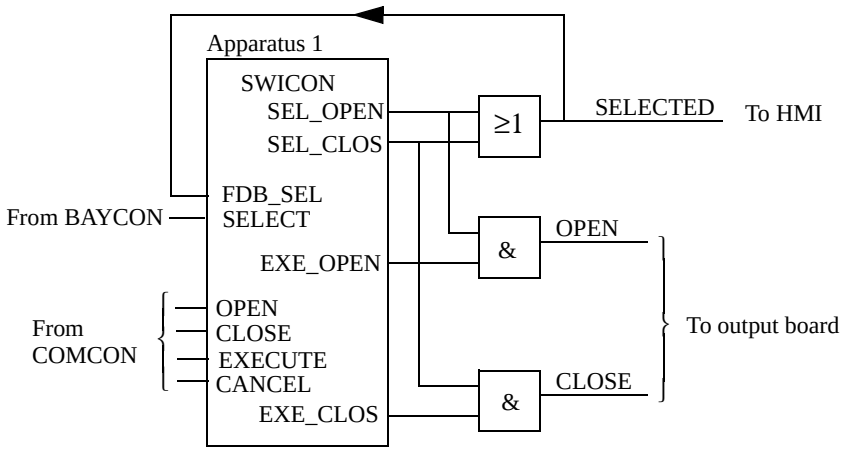

Figure 9: Connection of select and execute signals to the command output board from SWICON

Before a selection output is activated, SWICON checks the blocking (BLK_OPEN/CLOS) and interlocking (INT_LOCK) inputs. After activation of the selection outputs, the selection timer (T_SEL) starts. When the feedback select signal does not come in time, SWICON sets the

SEL_ERR output. After the execute outputs are activated, it sets the CMD_ERR if the position indication does not indicate a start in the position change, before the time T_START has elapsed.

Automatic operation is included in SWICON. It has an input for bay information concerning permission for automatic operation (AU_OP_V). It also has an output that indicates permission per apparatus (AU_OP_P).

For synchro-check, SWICON has two versions. One version (SWICONA) is for a synchro-check relay that checks the synchronisation condition continuously and gives a signal on SY_OK if there is synchronism, see Figure 28:. This is the normal application when the internal synchro-check function is used. To close the breaker, SWICON can activate the EXE_CLOS output at the activation of the SY_OK signal, when the CLOSE and EXECUTE inputs are already set and also when the SEL_CLOS output is set. The SY_RUN input is set to FIXD-ON. If not, the SY_OK input is used; it also sets to FIXD-ON.

The other version (SWICONB) is used for an external synchro-check or synchronisation relay. The close command from this relay is handled outside REC 561, see Figure 29: and Figure 30:. At the close command from the operator, SWICON activates the SEL_CLOS and EXE_CLOS outputs. SWICON now has two inputs SY_RUN and SY_FAIL that must have information on the state of the synchronisation relay. The SY_RUN signal is connected to the synchronisation relay, so it is activated when the synchronisation is in progress and waiting for its close command. This signal stops the command supervision given by the T_START time, so that the EXE_CLOS can be activated until the synchronisation relay gives its command to close the breaker. Also other timers in SWICONB are stopped when SY_RUN is activated. If not, the SY_RUN input is used; it sets to FIXD-OFF.

The SY_FAIL must be activated if the synchro-check/phasing does not reach synchronism within a certain time. SY_FAIL resets the complete operation sequence.

The auto reclose function closes the breaker via an OR logic (OR with the same cyclicity as the autoreclose function) with the normal close order from SWICON. For fast autoreclose function used with external selection relays, the AR_SEL input is used to select the apparatus without any checks of the selection conditions. To block the autoreclose function at the moment the apparatus is under operation, SWICON gives a BLK_AR output.

3.2.3.1 Parameters

T_POSERR

Allowed time for middle position.

T_POL

Time parameter for pole discordance. Allowed time to have discrepancy between the poles.

T_SEL
Allowed time from selection to feedback select.

T_START
Allowed time from execute to position indication change.

T_PULSE
Time parameter for command output pulse length. T_PULSE = 0 gives a steady command output signal.

3.2.4 BLKCON

BLKCON is used for blocking of functions in a bay and in an apparatus control program. BLKCONL (x=1) contains one blocking function and BLKCONK (x=1, 2 and 3) contains three blocking functions. The blocking function can be controlled with both steady and pulse signals. The functionality can be represented by logic as in the Figure 10: below.

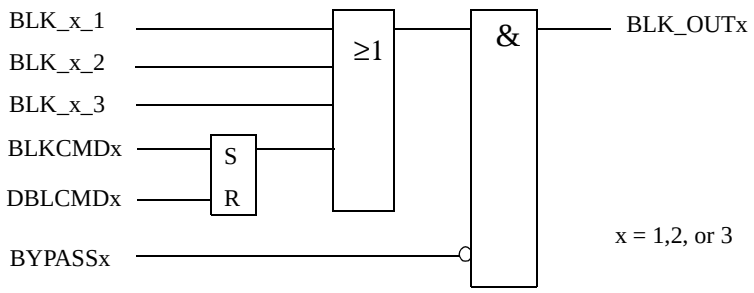

Figure 10: The function of BLKCON represented by logic

3.2.5 Communication between modules

Figure 11: is used as starting-point when explaining the signal flow between the different function block in the apparatus-control function. The control program in Figure 11: handles one bay, which includes two apparatuses. The detailed connections between the modules can be seen in the type solutions in the “Configurations” on page 169.

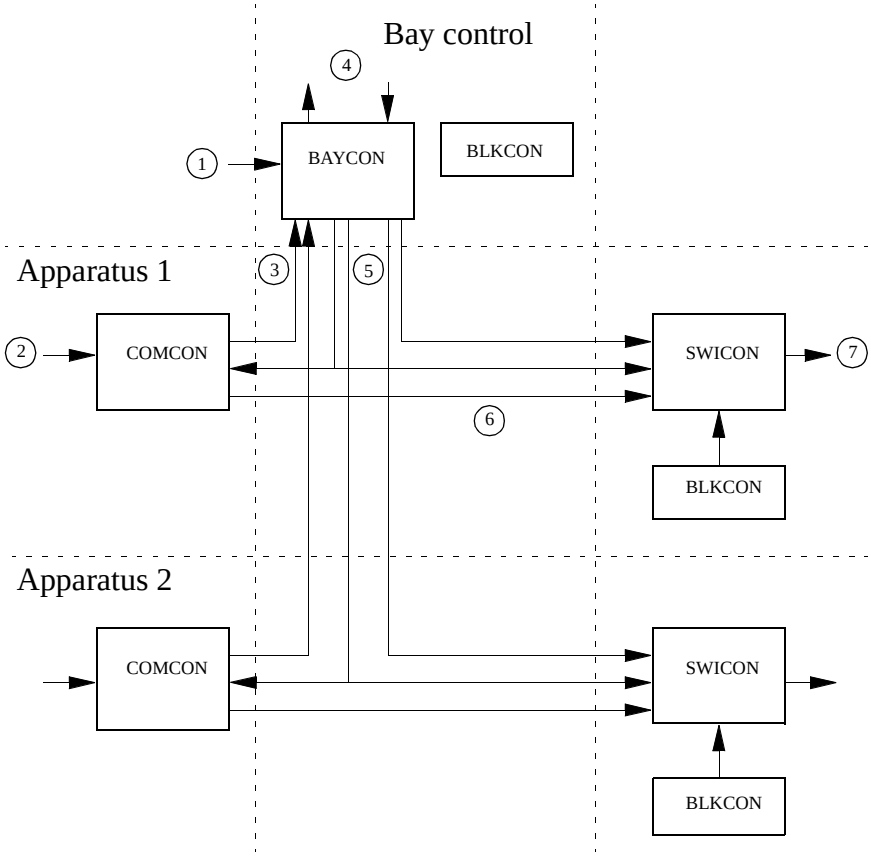

Figure 11: The signal flow between different modules in a bay

When operating apparatus 1, the general procedure is as follow:

1. Command to set valid operator place for the complete bay. This command can come from station HMI or the local back-up panel. The command is given when there is need to change the operator place only.
2. COMCON receives commands to operate the apparatus. Only commands from the valid operator place are accepted. The first command is a request to select the apparatus.
3. The BAYCON element receives the request from COMCON.
4. The BAYCON element sends a signal to other control programs to reserve their bays (if necessary). That is, no operation is allowed there. Acknowledgement signals should be received. Other control programs can be placed in the same REC 561 or in other REC 561s (bay-bay communication).
5. If everything is OK, the select signal is passed through to the SWICON element and is displayed on the station HMI.
6. The program is now prepared to receive the execute command from the operator.

7. The closing or opening command is sent to the selected apparatus.

Different kinds of errors can be detected.

Operator related errors, if too long time between:

- The select and the execute commands
- A request to override (reservation and/or interlocking) and the following select command

Apparatus-related errors, if too long time between:

- The apparatus starts to move
- The apparatus reaches the new position

Other apparatus-related errors:

- Pole discordance
- Command error (for example, when the apparatus is blocked or interlocked)

Other errors:

- Reservation failure
- Binary output board error

4 Configurations

4.1 General

This part describes type solutions for connection to other application functions. All functions are described in separate chapters. A standard configuration for a single-breaker bay with double busbars including five high-voltage apparatus can be found in an “Example configuration”. Figure 12: shows an overview of a circuit breaker module that includes breaker-related optional functions. Note that the OR gates for the open and close signals must have the same execution cyclicity as related protection function, that is, the breaker failure protection and autoreclosing functions.

.

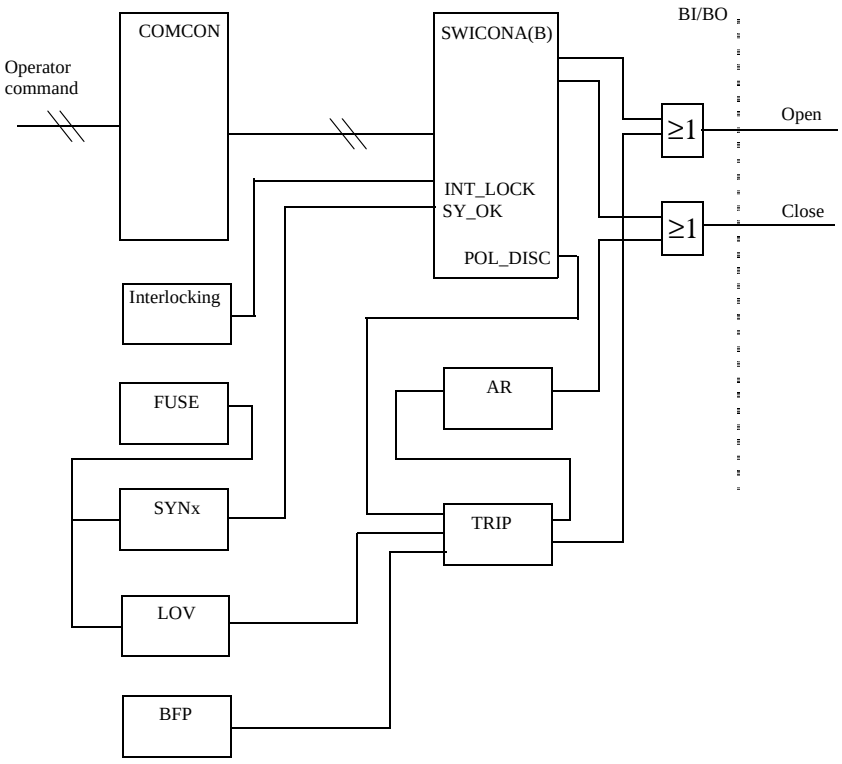

Figure 12: Example of a breaker configuration including optional functions within REC 561

Figure 13: shows an overview of a disconnector/earthing switch module.

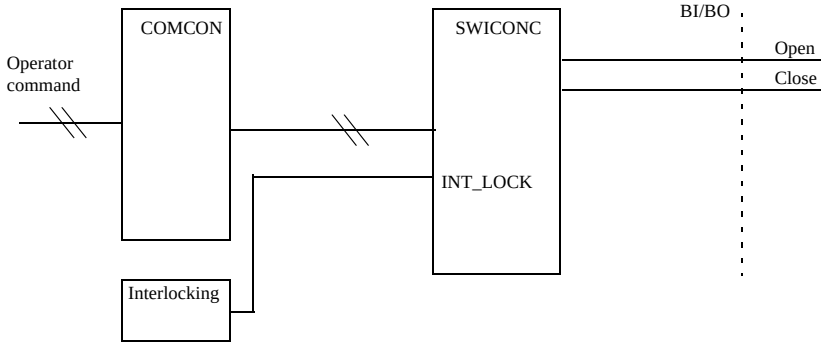

Figure 13: Overview of a disconnector/earthing switch configuration

4.2 Connections to other functions

4.2.1 Reservation function

The reservation function is primarily a method to transfer interlocking information from other bays in a safe way.

To reserve other bays, the BAYCON bay control module needs interaction with the bays that must be reserved. Note that only bays that must be reserved or need to reserve other bays must have these connections.

The question of which bays that should be reserved by this bay is delivery specific. In general there are three ways:

- Only the bays that influence the interlocking conditions must be reserved.
- The whole voltage level must be reserved. All other bays on this busbar voltage level must be blocked.
- The whole station must be reserved. All other bays in the station must be blocked.

The connections to reserve the apparatuses within the own bay are shown in Figure 14:. The timing diagram is shown in Figure 15:. The reservation function follows the steps below:

1. The op_SEL_O selection signal or op_SEL_C selection signal (op=operator place R/S/L) in COMCON is activated when an apparatus is selected for operation. COMCON sets the RQ_SEL output.
2. The signal RQ_SEL activates the RE_BAYS output via RQ_SELx in BAYCON for reserving other bays. After successful acknowledgement from other bays, the select output (SELx) is set to inform other elements that it has reached a reserved state. In this state, it will not accept other requests, which ensures that no other operations are possible in this bay.

3. After acknowledgement from all bays, the select output (SELx) from BAYCON activates the SELECT in COMCON and allows the execute command to pass through.
4. When SELECT in SWICON is activated, SWICON with the signals OPEN/CLOSE/EXECUTE from COMCON gives an execution signal (open/close) using the output signals SEL_OPEN/CLOS and EXE_OPEN/CLOS.
5. The signal SEL_RES is resetting the selection request (RQ_SEL) after successful operation (that is, new position reached) or command error. SEL_RES is active until SELECT is reset..

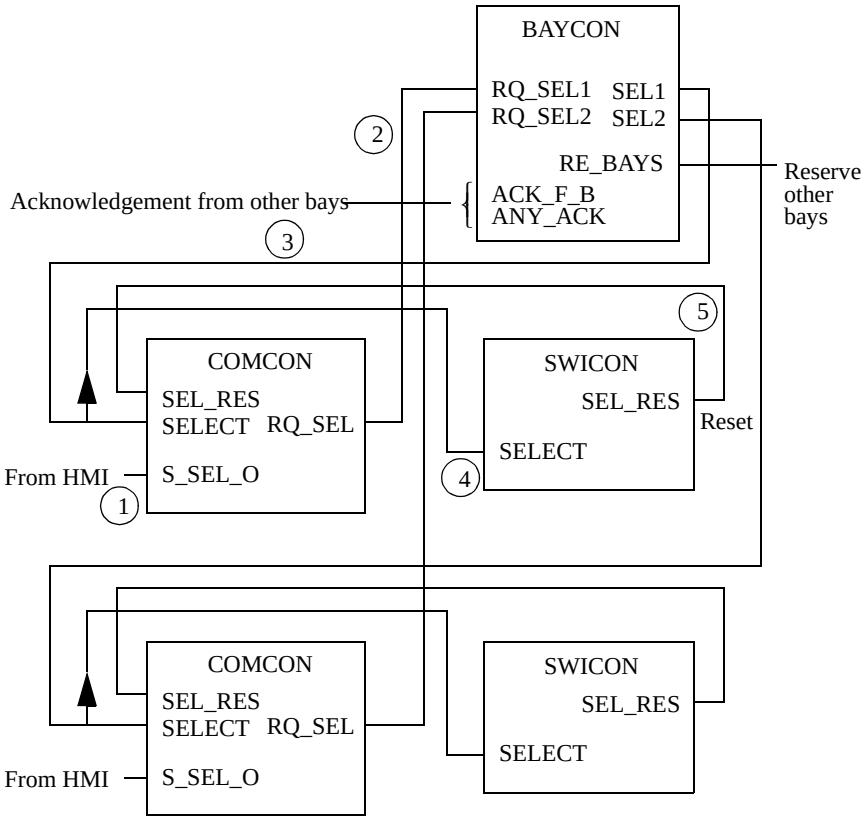

Figure 14: The reservation function within the own bay

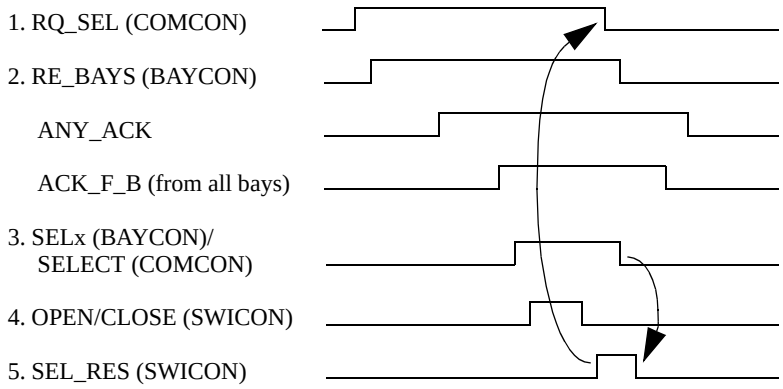

Figure 15: Timing diagram for the reservation function

For reservation of other bays, signal exchange between the bays is necessary. The signals to reserve other bays and signals to reserve the own bay from other bays are shown in Figure 16:, which describes the receiving part of the reservation function. Multiple Command Function blocks are used to receive the information from other bays (see document “Command function”).

The module BAYCON requests the reservation of other bays with RE_BAYS and needs to know if other bays are reserved or not. It receives the acknowledgements on the ACK_F_B inputs, which specifies that all bays are reserved and on ANY_ACK that any bay is reserved. It also checks the communication status (V_TX).

The logic to gather these signals from the requested number of bays (in this example from three bays X, Y, Z) is delivery specific and made outside the BAYCON module. This is because the BAYCON is independent of the number of bays to communicate with.

When the request is coming from another bay, there is one signal (RE_RQ_B) for reservation request. V_RE_RQ is the signal for valid request from any bay.

The EX_DA_UP input signal indicates that the program that acknowledges the reservation is running. This signal is not applicable in this application and can be set to 1=FIXD-ON.

With the inputs RE_Bx (x = 1,...8) set to 1= FIXD-ON, it is possible to suppress the reservation of other bays at a request select (RQ_SEL) from a specific apparatus (1,...8) in the own bay. That is, the BAYCON only reserves the own bay.

The signal BLK_RE blocks the reservation. That is, no reservation can be made from the own bay or any other bay. This can be set via a binary input from an external device to prevent operations from another operator place at the same time. This function can be overridden in the own bay with the OVERRIDE signal, for example, from the HMI.

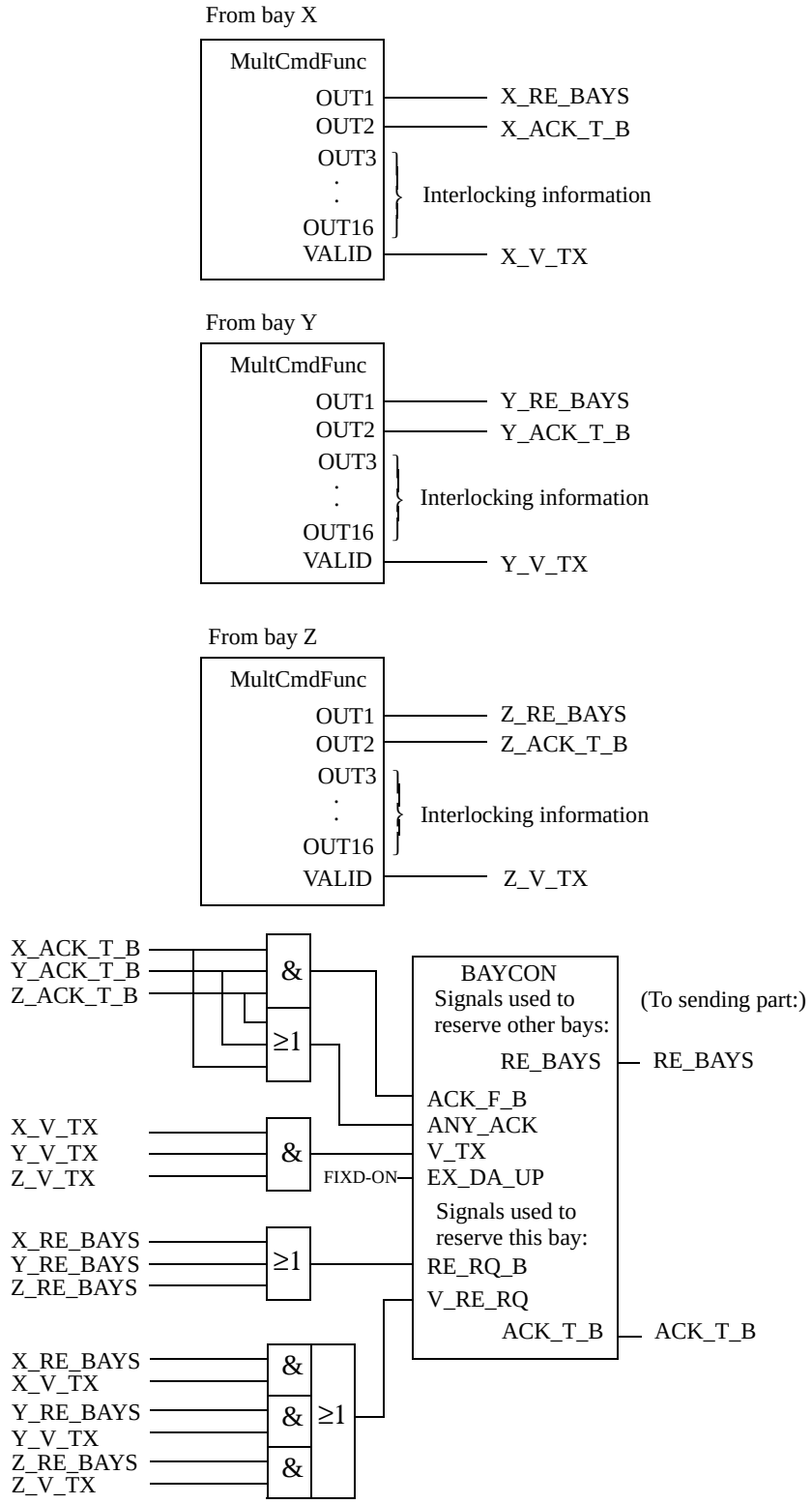

Figure 16: The receiving part of the reservation function between bays

Figure 17: shows the sending part of the reservation function. From this part, the request (RE_BAYS) from BAYCON to reserve other bays (RE_RQ_B) are sent to other bays by broadcast, that is, to all bays at the same time. Event Function blocks are used to send the information to other bays (see document “Event function”).

The connection for acknowledgement (ACK_T_B) from BAYCON gives the result that only the bay that asked for reservation gets the acknowledgement back.

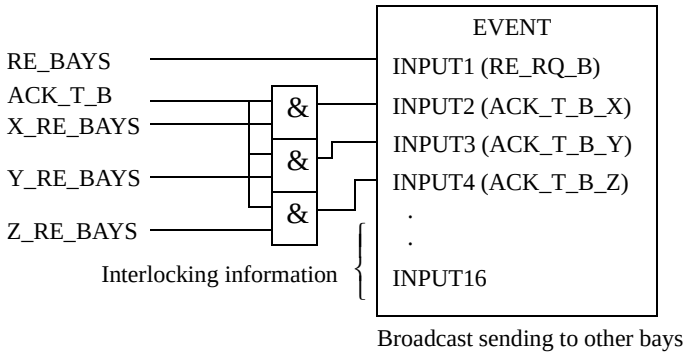

Figure 17: The sending part of the reservation function between bays

In REC561, one or more event function blocks are used to broadcast information from one REC561. One or several REC561s are configured to receive this information. Each command function block can only get information from one event function block.

The first bit in the event function block is used for reserve request (RE_RQ_B). This signal must be steady, so the reserve request equals true means reserve and equals false means release.

After this reserve request bit, there is one reserve acknowledgement bit (ACK_T_Bx) for each bay that can reserve the bay. So if three bays can reserve the bay, three signals are used.

ACK_T_B is reset after RE_RQ_B is reset. If the RE_RQ_B remains (for example due to communication error), ACK_T_B is reset. The T_CAN_RE time after V_RE_RQ is reset.

After the reserve acknowledgement signals, the apparatus positions are needed for the interlocking. This information can be of these types:

- Busbar A and busbar B is connected
- Busbar A and busbar B is disconnected

This means that the position for each apparatus is not distributed, if not needed.

If this interlocking information needs additional event blocks for sending, the first bit of all the extra blocks is a reserve acknowledgement signal to acknowledge any bays, see Figure 18:.

These steps can be defined for the complete execution:

- The command execution bay receives a request for operation, for example by a selection from HMI.
- If the bay is reserved the command is cancelled.
- If other bays should be reserved, the reserve request bit is set in the event function block.
- The request information is broadcasted to all other bays.
- The receiving bays put the data to the command function blocks in the different bays.
- The bays that must be reserved, read the request from the command function block, block all commands in the own bay, evaluate the apparatus positions, and set the interlocking information and the reserve acknowledgement on the event function block.
- The response is broadcasted to all other bays.
- The other bays configured to read this message put the data to the command function blocks.
- The command executing bay receives reserve acknowledgement signals from all the bays that were requested. If one or several bays do not respond within a predefined time, the command is cancelled.
- When all reserve acknowledgement signals are received, the interlocking condition is evaluated. If the command is allowed, it will be performed.
- When the command is executed, the reserve request bit is reset on all event function blocks and broadcasted in the same way as the reserve request.
- The reset reserve request bit is interpreted as a release in the bay that was reserved. So the bay is free, and the reserve acknowledgement bit is reset on the event function block and broadcasted back.
- The command executing bay waits until all reserve acknowledgement signals are reset. When this is done, the bay is ready for a new command.

4.2.1.1 Example

Figure 18: illustrates the above described step-by-step command execution and bay-to-bay communication.

The example station is a double busbar with only two lines and one bus coupler. The bus coupler also handles the busbar earthing switches.

In this station, Line 1 and Line 2 need information from the bus coupler and the bus coupler need information from Line 1 and Line 2.

Figure 18: illustrates the station-wide communication. The signals not used in the figure are removed.

The bus coupler has information for two event function blocks. But for the two lines, one block is enough.

Besides these outputs, a valid bit is available on the command function blocks..

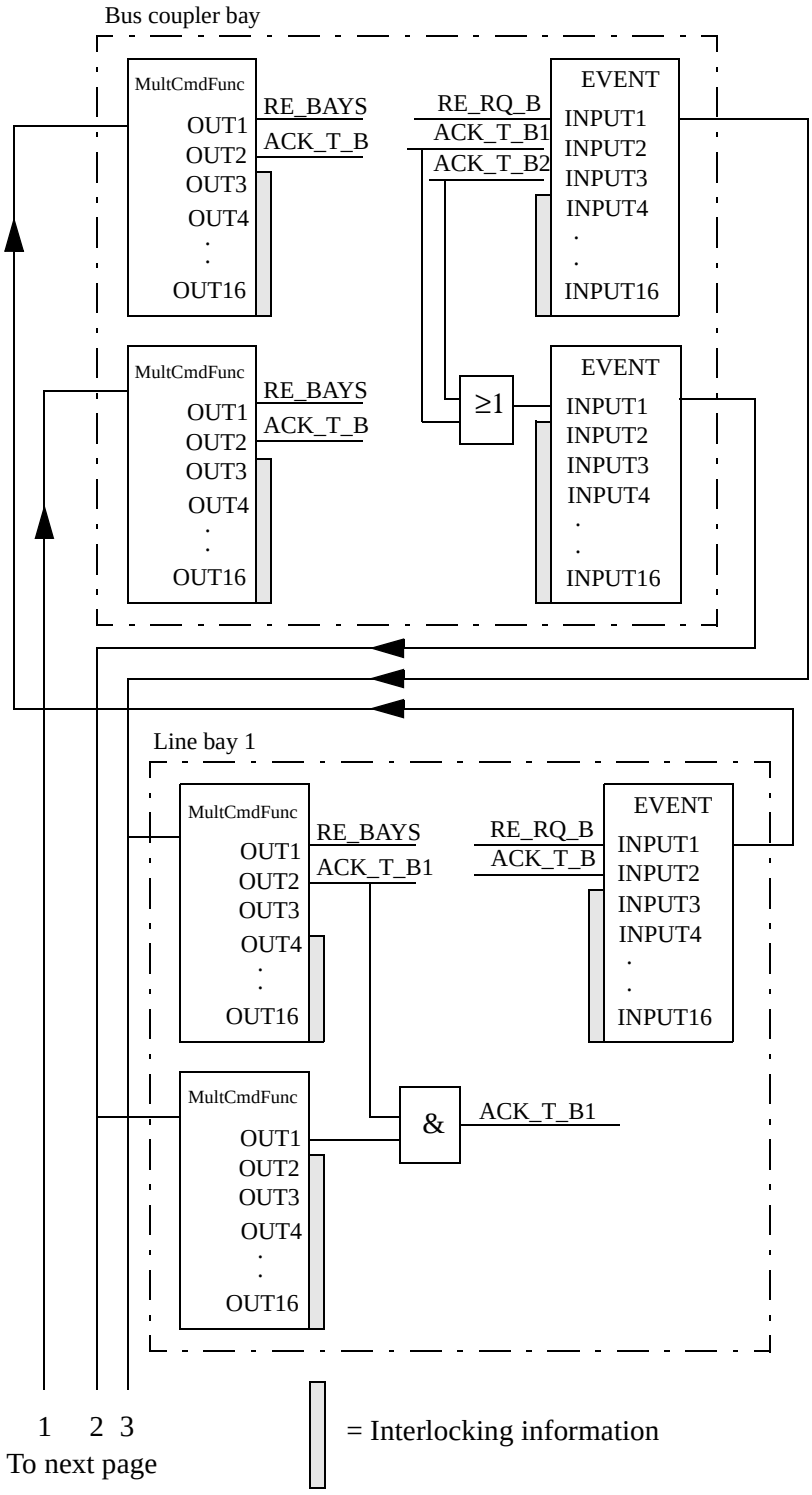

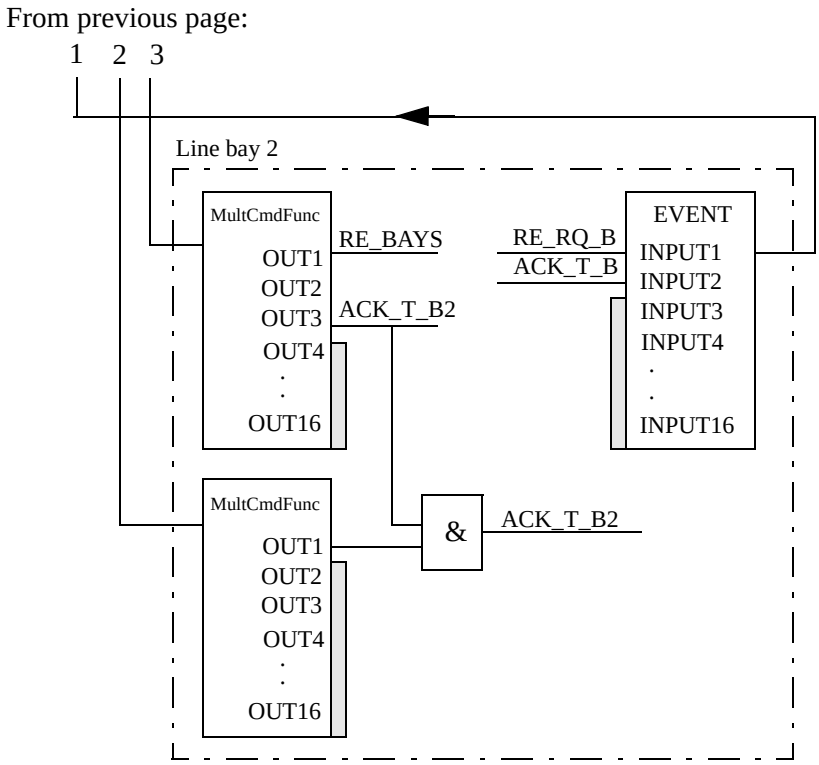

Figure 18: The principle of the communication between bays

4.2.2 Operator place selection

The connections to the operator place selectors can be done as shown in Figure 19:, where the remote/station selection is performed from the station HMI, and the selection for the local control is performed from a switch on a local panel. It has a built-in priority with Local as highest, Station as intermediate, and Remote as lowest priority. When two or more inputs are set at the same time, the higher priority prevails. The S_R and S_S inputs have pulse inputs. But the L_L requires a steady signal.

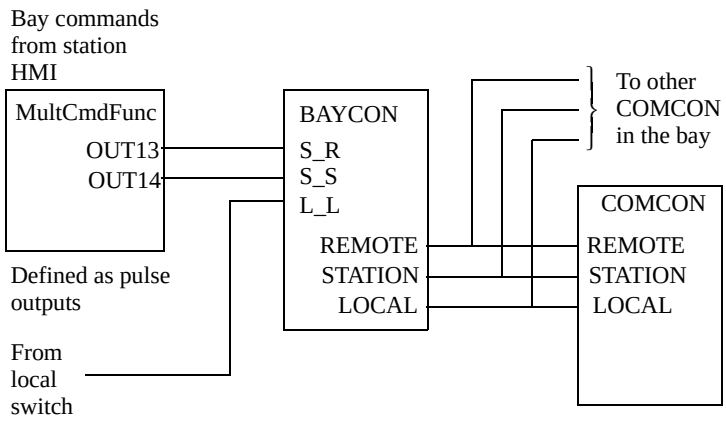

Figure 19: Connection of operator place selection

Some applications require that the operator place selection must be performed without any priority, that is, the desired operator places must be able to be set independent of each other.

Figure 20: shows an application example, where the operator from a switch on a local panel can select either the position Off, Local, or Remote/Station/Local. If Off is selected, it is not possible to operate from any place. If Local is selected, it is possible to operate only from the local panel.

If the switch is set to position Remote/Station/Local, it is always possible to operate from the local panel, and also from Remote or Station - independent of each other. In this example, it is possible to operate from remote, station, and local operator places, if the position Remote is set in the station HMI. If the position Station is set in the station HMI, it is possible to operate only from the station HMI and from the local panel.

The pulse timer in the figure below sets automatically the operator place selection to position Remote at start up of the terminal, if the switch on the local panel is set to position Remote/Station/Local. That means, in this example, that operation from all three operator places is possible.

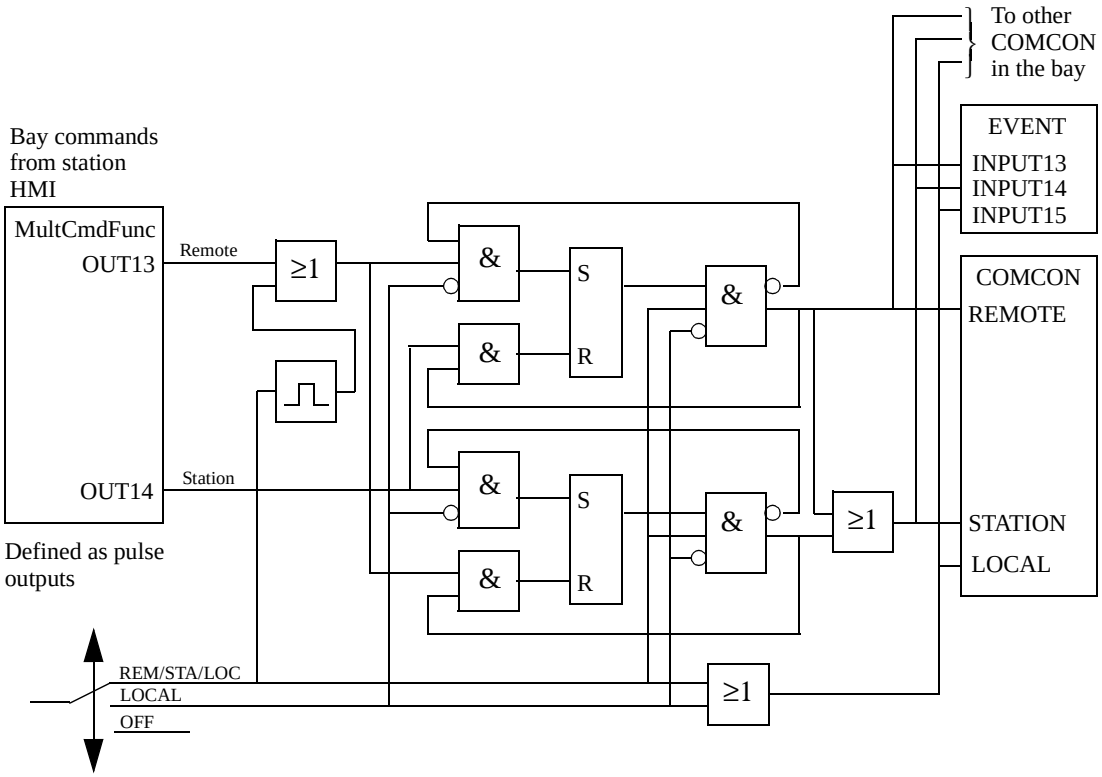

Figure 20: Application example of operator place selection without priority

4.2.3 Station HMI

The connection to the station HMI is made via EVENT-block and MultCmdFunc-block in a standardised way. Figure 21: shows the command connections between the command blocks and the apparatus control modules. Figure 21: also shows how the BLKCON modules are used.

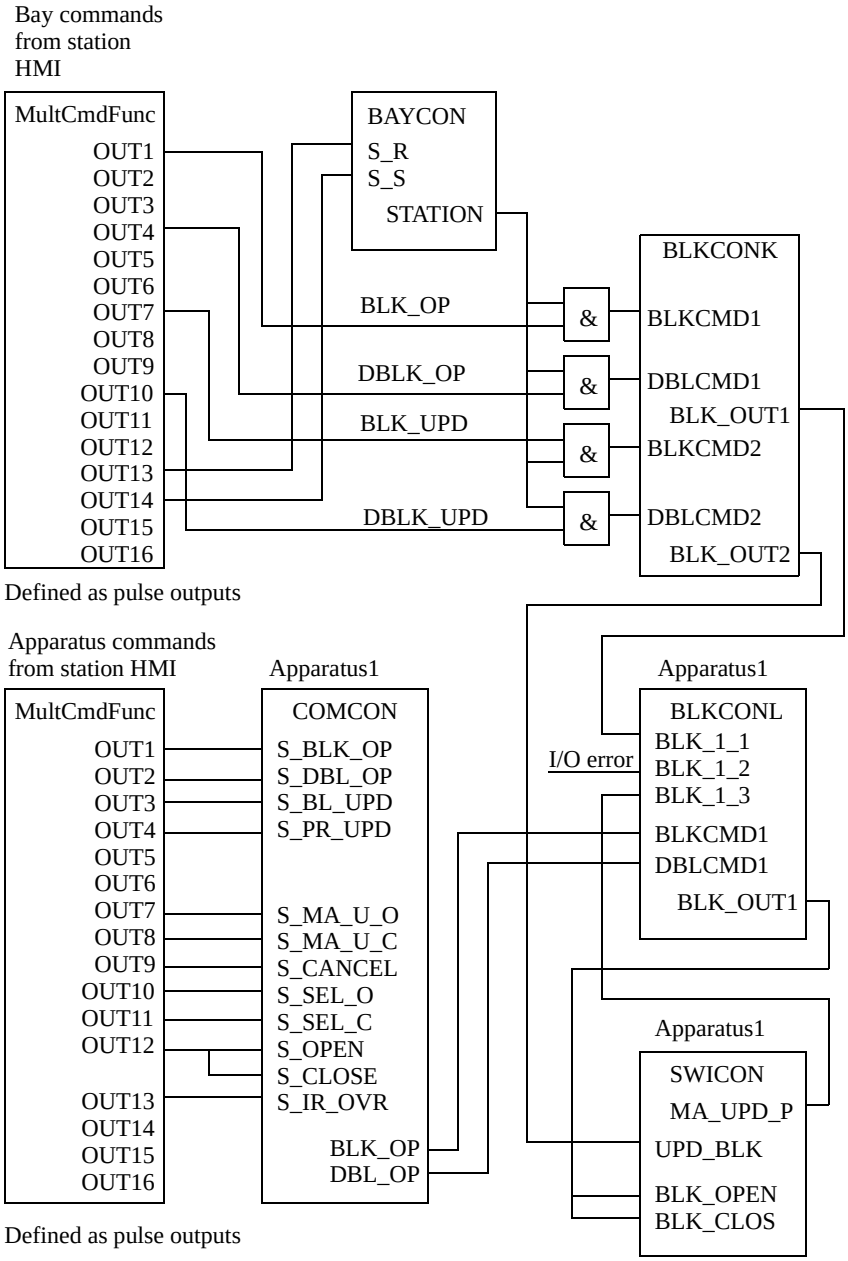

Figure 21: Command connections between the station HMI and apparatus control modules

Figure 22: shows the signals from the apparatus control modules for one apparatus that will be sent to the station HMI. The event input 7 can be connected to the tripping logic to indicate on the station HMI that the circuit breaker was opened due to a trip from the protection. The inputs 3 and

4 are used only for event handling of the positions for one pole of the circuit breaker. For event handling of all three poles separately, an additional Event Function block is needed.

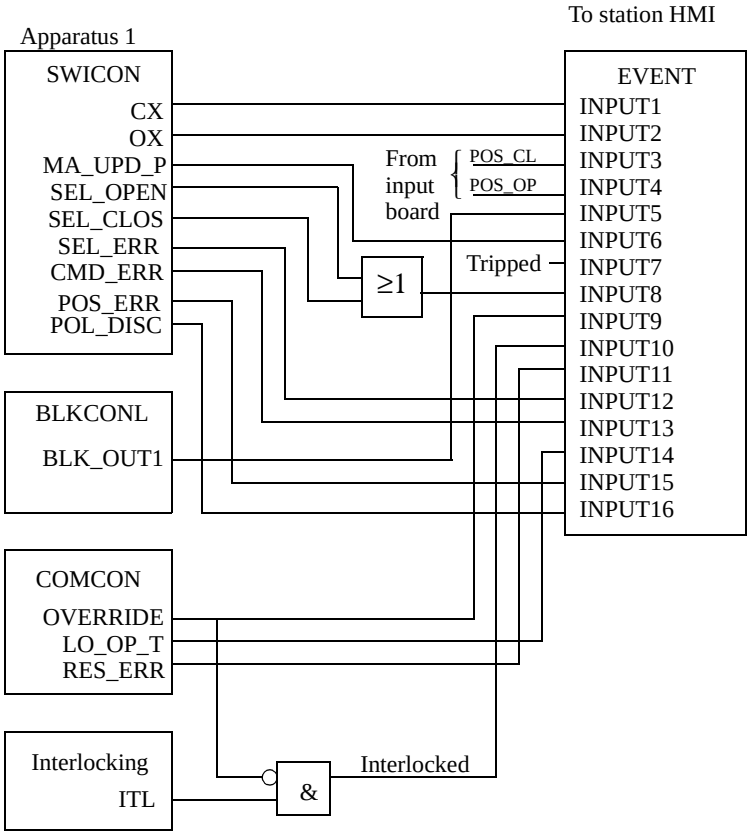

Figure 22: Event connections between the station HMI and apparatus control modules for one apparatus

Figure 23: shows bay-related signals that can be presented on the station HMI.

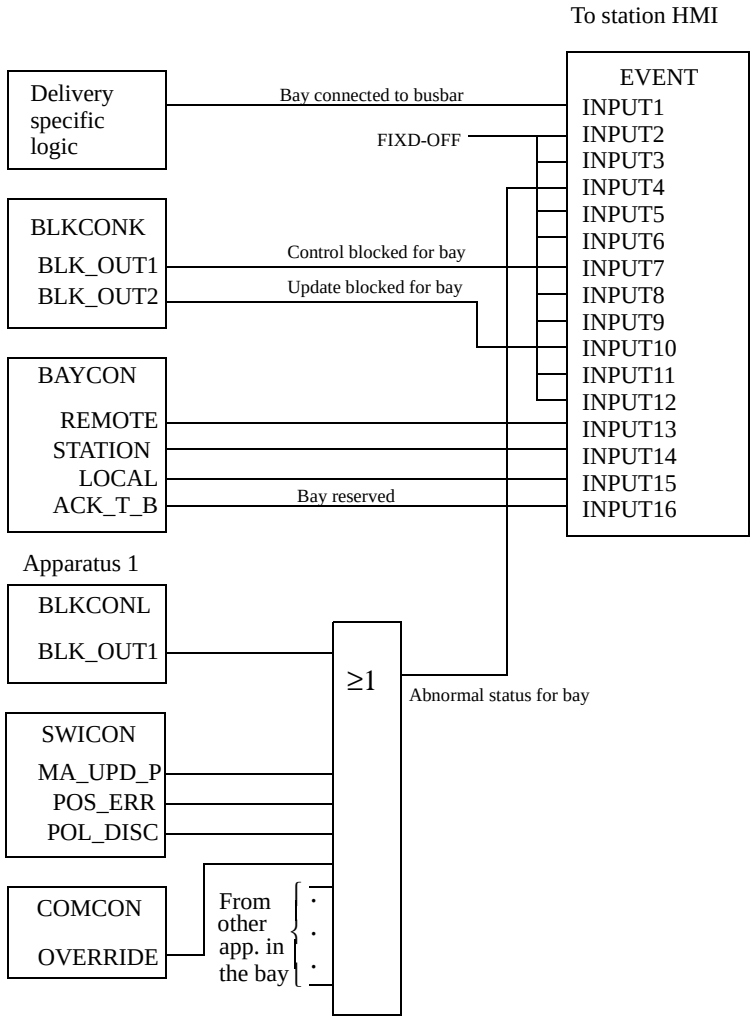

Figure 23: Event connections between station HMI and bay-related signals

4.2.4 Remote control

The command signals from the remote-control gateway are transferred to REC 561 via Single Command function blocks and can be arranged in a way shown in Figure 24:. All or some of the events defined for the station HMI can also be sent to the remote control gateway.

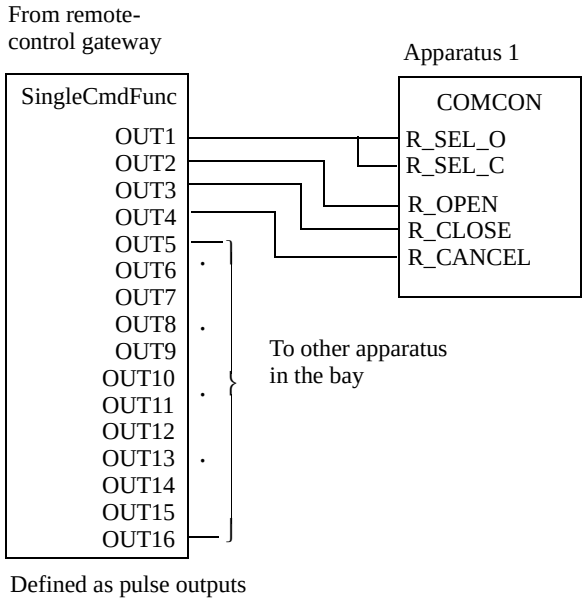

Figure 24: Control commands from remote-control gateway

4.2.5 Local panel (back-up panel)

The connection of an external local panel to the apparatus control modules is done via binary inputs. Figure 25: shows one example of a solution. This solution of local control considers the interlocking function. The panel can also be used as an back-up panel, but the outputs from the panel are then connected directly to the high-voltage apparatuses. The position indications are normally directly connected to the panel to get

independent information about the apparatus positions. At use as back-up panel, the select and execute inputs into the control terminal must be blocked, for example, with AND gates with the condition no back-up.

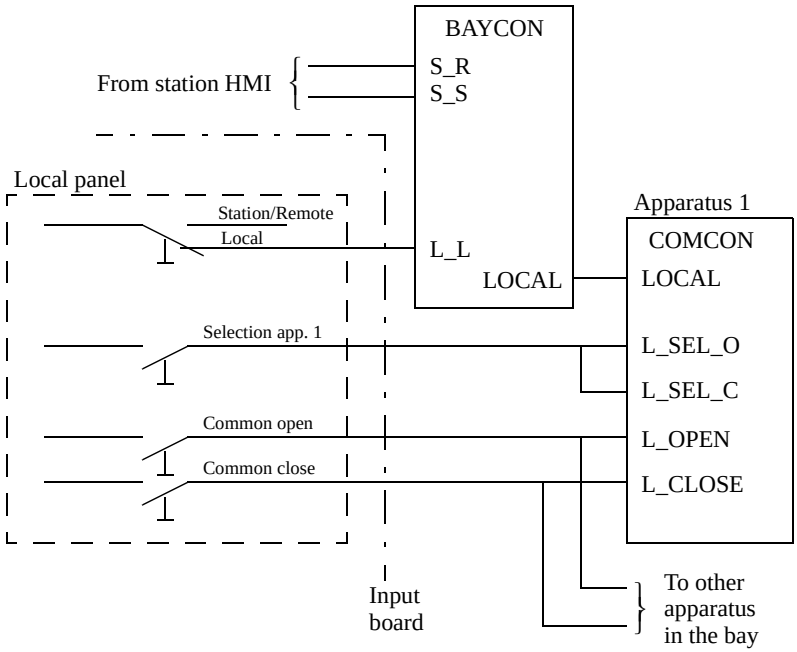

Figure 25: Connection of an external local panel via binary input board to apparatus control modules

4.2.6 Local HMI

The high-voltage apparatus can be operated from the local HMI via the SingleCmdFunc block. The SingleCmdFunc block, which must be accessible from the local HMI, can be defined from the SMS. The naming of the signals in the SingleCmdFunc block can be defined from the SMS and the CAP 531 configuration tool. Figure 26: shows an example how to connect a SingleCmdFunc block to the apparatus control modules. The command dialogue from the local HMI is performed in two steps, see document “Command function”.

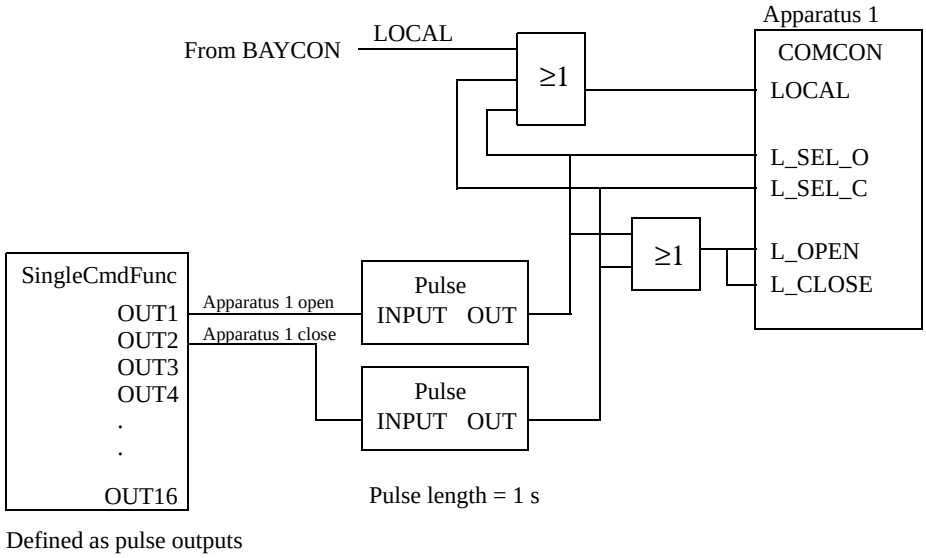

Figure 26: Connections between a SingleCmdFunc-block controlled from the local HMI and the apparatus control modules

4.2.7 Interlocking

Figure 27: shows the connection between an interlocking module and apparatus control modules. The input is activated when the apparatus is interlocked. The interlocking information within the REC 561 control terminal are taken from the binary input boards. Information from other bays are transferred over the station bus. The “Reservation function” on page 170 describes the method for transferring these data.

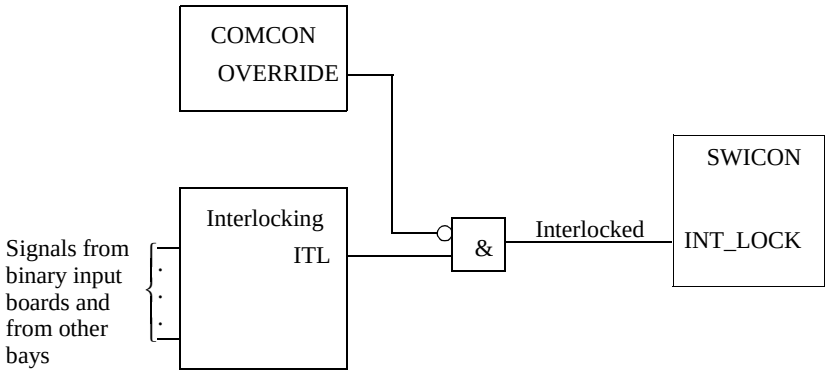

Figure 27: Connection of an interlocking module to apparatus control modules

4.2.8 Synchrocheck with phasing

Connections between the apparatus control modules and the synchrocheck/phasing function can be made either for the built-in synchrocheck/phasing module or for an external synchrocheck relay, for example, type RASC. External synchronisation equipment can also be connected to the apparatus control modules. Figure 28: shows the connections for a combined synchrocheck/phasing function that checks the synchrocheck condition continuously and gives a signal on SY_OK if there is synchronism. If the synchrocheck conditions are not fulfilled, the phasing function will start and give a command pulse when the phasing conditions are fulfilled.

This is the normal application when the built-in synchrocheck/phasing function is used. Note that the AND/OR-gates connected between the output CLOSECB of the phasing module and the output board must be running with fast execution cyclicity. The interlocking condition for the breaker closing is connected to the BLOCK input of the module.

To close the breaker via the apparatus control function, SWICON can activate the EXE_CLOS output at the activation of the SY_OK signal when the CLOSE and EXECUTE inputs are already set and also when the SEL_CLOS output is set. The input SY_RUN is set to FIXD-ON. Figure 28: also shows an example of how to bypass the synchrocheck/phasing function by a command from the station HMI.

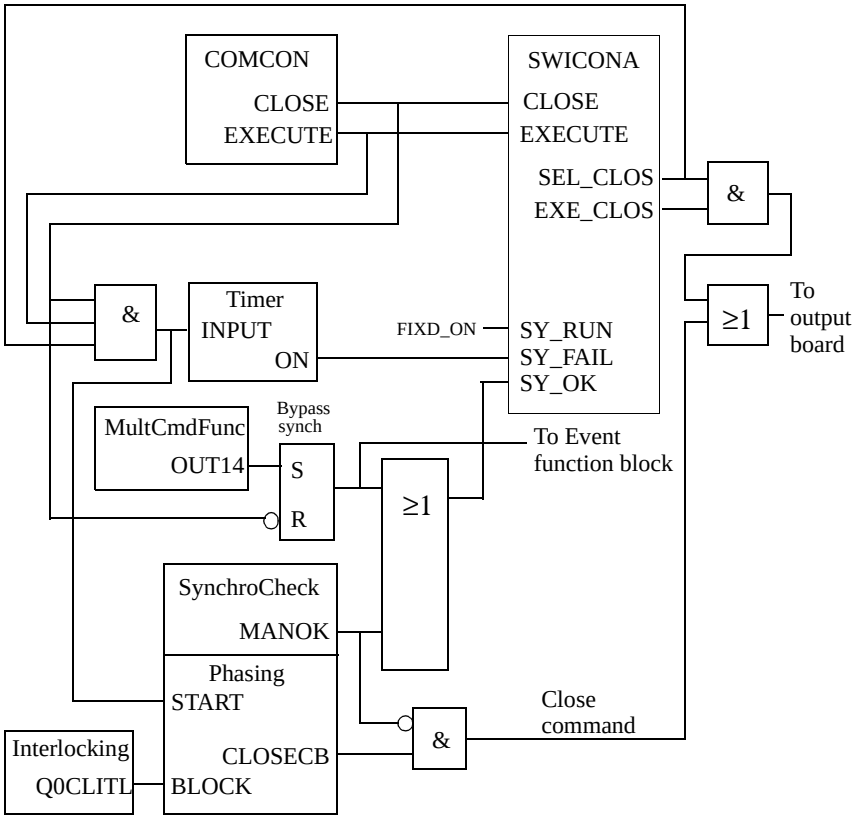

Figure 28: Connections between the built-in synchro-check/phasing module and the apparatus control modules

Figure 29:, Figure 30:, and Figure 31:, show three alternatives of configurations for the SWICONB module when an external synchrocheck or synchronisation relay is used. For alternative 1 in Figure 29:, the synchronisation starts when the line and busbar voltages are connected to the synchrocheck relay. For alternative 2 in Figure 30:, the synchrocheck relay continuously checks the synchronisation condition. Alternative 2 can also use the solution in Figure 28: if the close command from the synchrocheck relay is connected via a binary input to the SY_OK input on SWICONA. Alternative 3 in Figure 31: shows the connection to an external synchronisation equipment, for example, type RES 010.

For the external synchrocheck relay, the close command is handled outside REC 561. At the close command from the operator, SWICONB activates the SEL_CLOS and EXE_CLOS outputs. SWICONB now has two inputs SY_RUN and SY_FAIL, which must have information on the state of the synchrocheck relay. The SY_RUN signal is connected from the synchro-check relay, so it is activated when the synchrocheck is in progress and waiting for its close command. This signal stops the command supervision, so that the EXE_CLOS can be activated until the synchrocheck relay gives its command to close the breaker.

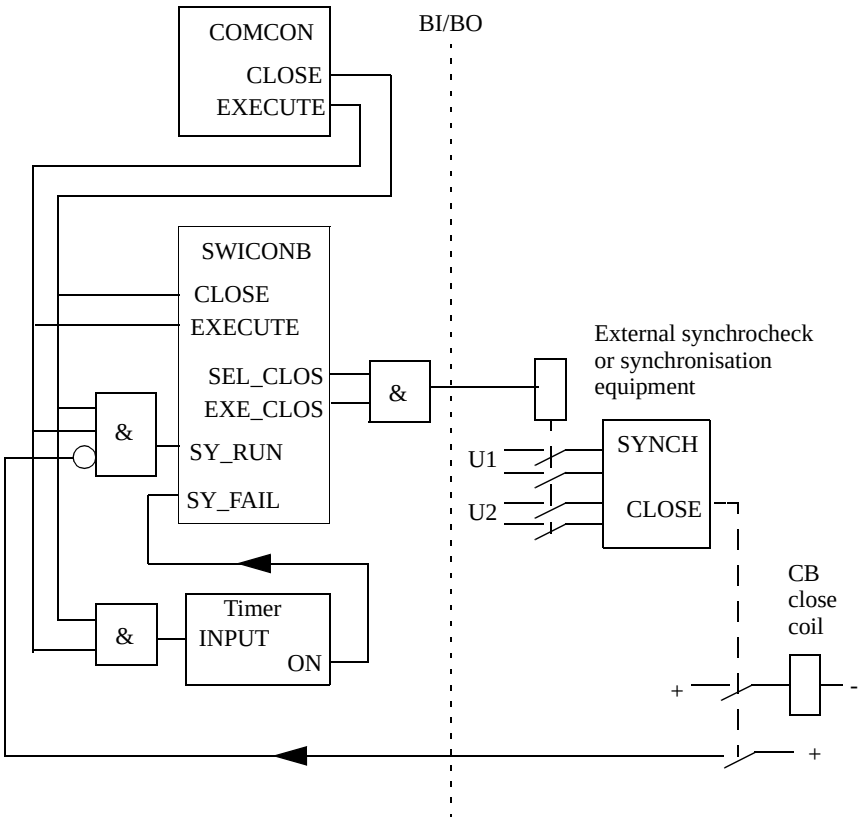

Figure 29: Connections between external synchrocheck equipment and the apparatus control modules, alternative 1

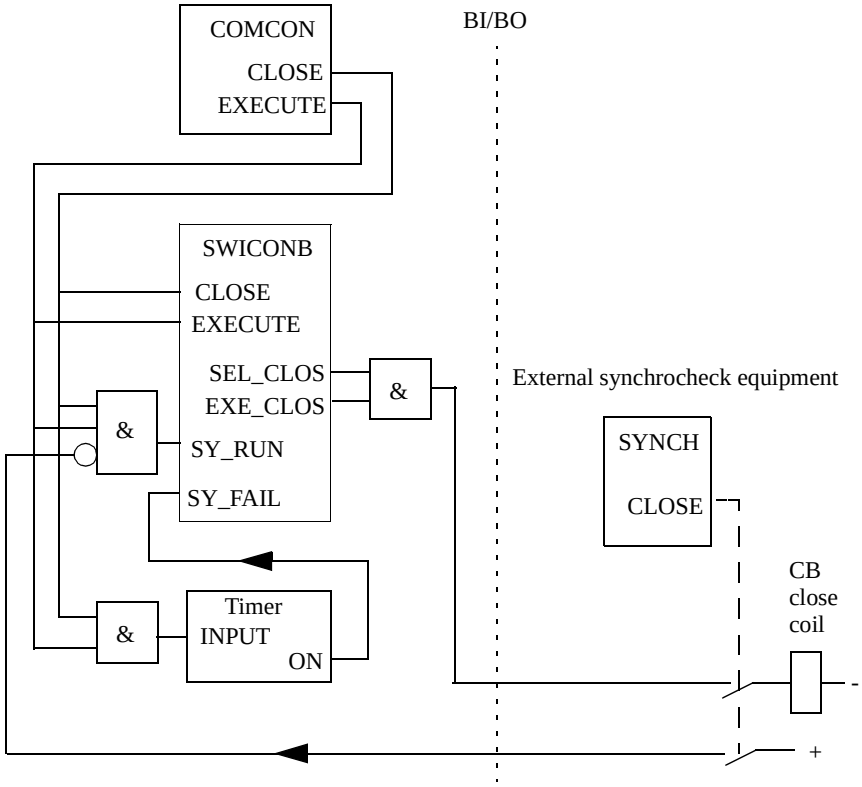

Figure 30: Connections between external synchrocheck equipment and the apparatus control modules, alternative 2

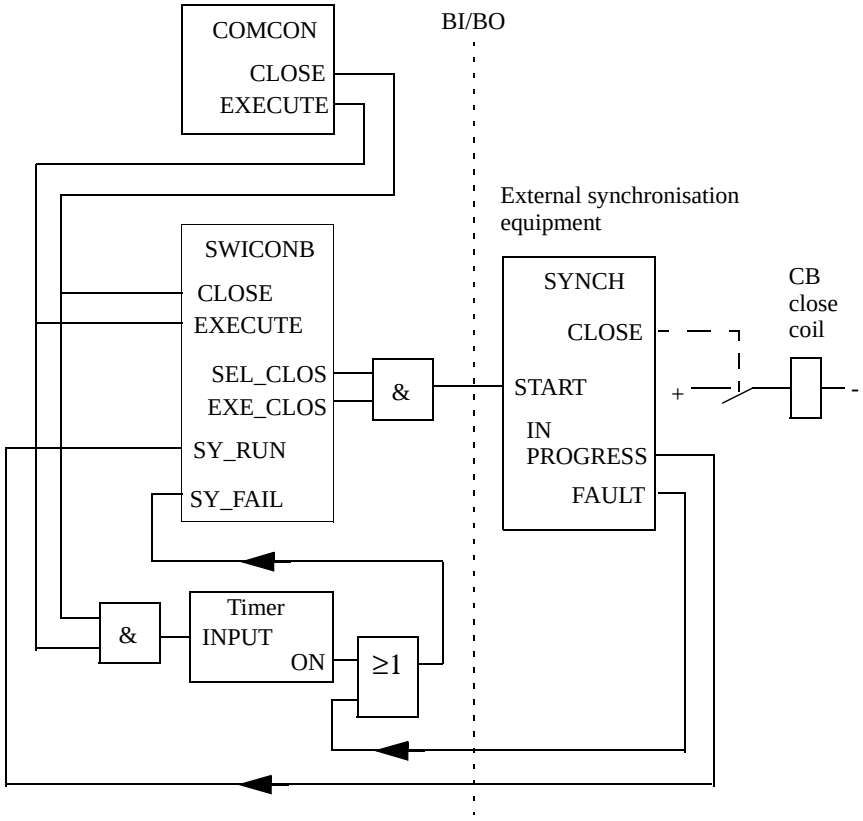

Figure 31: Connections between external synchronisation equipment and the apparatus control modules, alternative 3

In Figure 28: to Figure 31:, the SY_FAIL input supervises the synchronisation time. If the relay does not reach synchronism within a certain time, SY_FAIL is activated and resets the complete operation sequence.

4.2.9 Autoreclosing

Figure 32: shows the interaction between the autoreclosing (AR) module and the apparatus control modules. The OR gate for the close signal must have the same execution cyclicity as the autoreclosing module. The signal BLK_AR from SWICON is used to block the autoreclose function at the moment the circuit breaker is under operation.

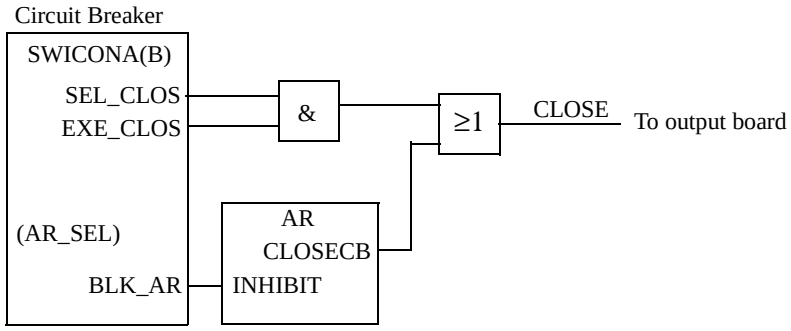

Figure 32: Connections between autoreclosing (AR) module and apparatus control modules

If the autoreclose function is used with external selection relays according to the principles described in Figure 6: and Figure 7: in “BAYCON” on page 157, the input AR_SEL in SWICON is used to select the breaker without any condition checks. When AR_SEL is set, the output SEL_CLOS is activated directly. The close signal from the autoreclose function is connected via the OR gate for close commands in a normal way.

4.2.10 Protections

The protection functions are normally running independent of the apparatus control modules. The trip signals from the protection modules included in REC 561 are connected via the tripping logic function. If a three-phase circuit breaker is used, the GTRIP general trip signal from the tripping logic can be connected to the same open output as for the manual control from SWICON via an OR gate (see Figure 33:). Here, the OR gate must have the same execution cyclicity as the tripping logic module.

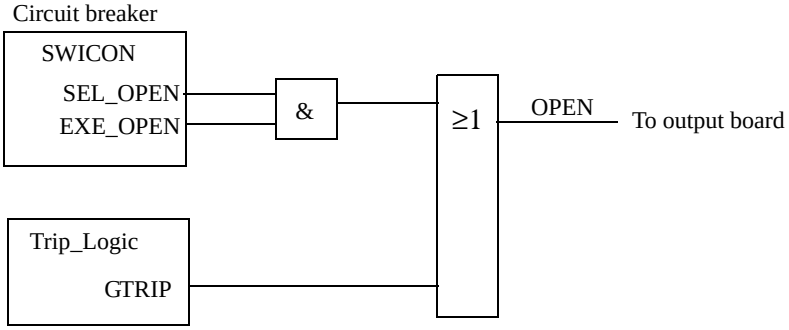

Figure 33: Connections between the tripping logic and the apparatus control modules

4.2.11 Pole discordance protection

The pole discordance function included in the SWICONA(B) is based on checking the positions of the auxiliary contacts on the breaker. The connection of the trip signal is made according to Figure 34: and to the output board in the same way as for other protections (See “Protections” on page 189.). The T_POL time delay to trip is set to 2 seconds as a default value. Since only one tripping logic is available in the control terminal, the POL_DISC output is connected directly to the OR gate for the open command, if more than one circuit breaker is included in the terminal.

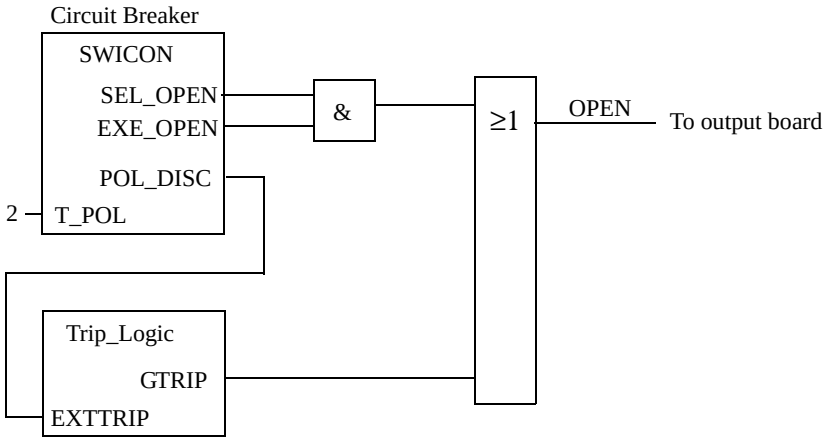

Figure 34: Connection of the pole discordance trip from SWICON via the tripping logic

4.2.12 Automatic functions

Using the same methods as for ordinary commands that come from different operator places, there are inputs (select/execute/cancel) to be connected from other application programs in the form of automatic functions. These programs can be located in the same REC 561, in another terminal, or in a station computer.

One usage for automatic programs is when the apparatuses are included in a sequence, for example, a busbar transfer.

Figure 35: shows the signals connected to the COMCON module.

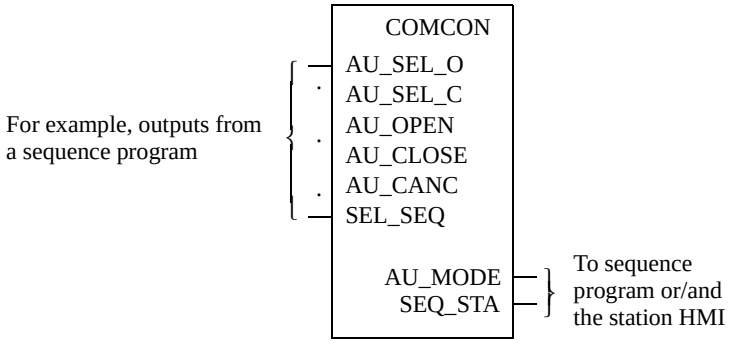

Figure 35: Connections to automatic functions

4.2.13 Command output module

The command outputs from the apparatus control modules can be connected to the output module in different ways depending on functionality. The output module has supervised outputs. That is, the output relays are continuously supervised in a way that an unwanted activation is detected, which stops the continuation of the operation. This is performed by using the ERROR signal connected to BLKCONL for blocking the command. To get a secure command, two contacts are connected in serial. The fol-

lowing figures show examples of different configurations. The terminal diagram for the binary output module shows detailed information about the terminal numbering.

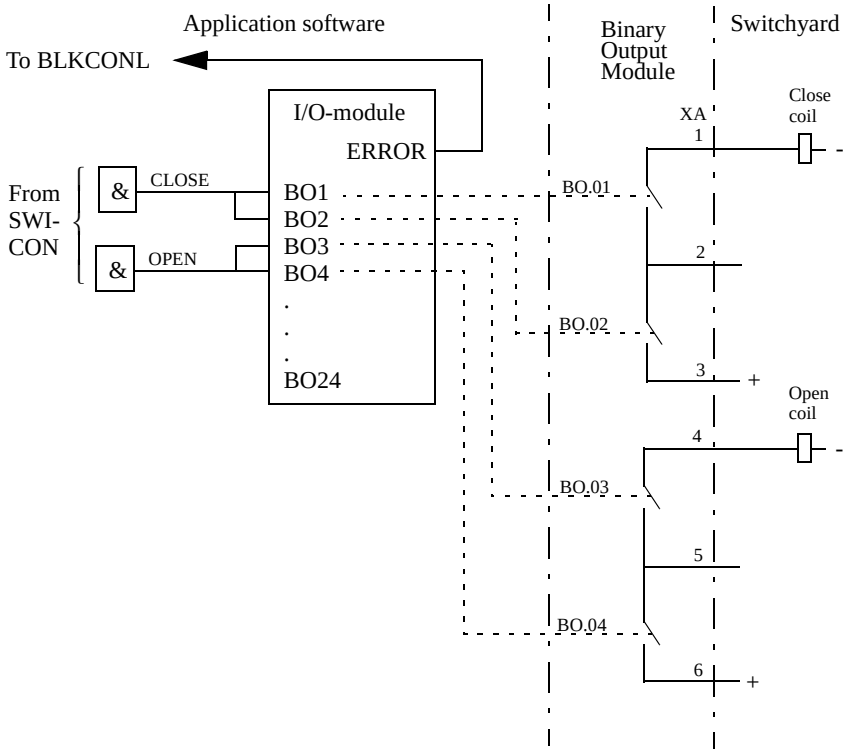

Figure 36: Single pole command outputs with supervision

Figure 36: and Figure 37: are the standard configurations during operation of high-voltage apparatuses. The double pole command is normally used to avoid an unwanted operation of the apparatuses, due to an earth fault in the switchyard. The output module is very flexible. So users can mostly find solutions for their own requirements.

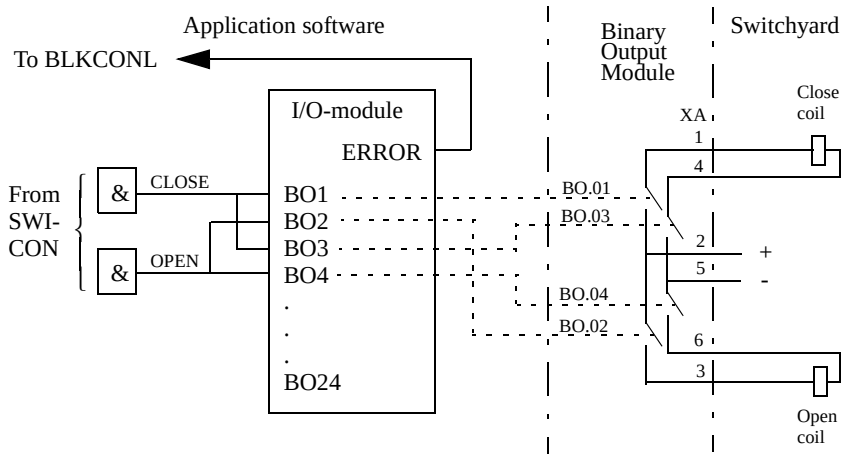

Figure 37: Double pole command outputs with supervision

Figure 38: shows the configuration of single outputs used for purposes other than operating high-voltage apparatuses. Here the ERROR signal is connected to an event function block for alarming or as a condition for another application. The security is limited compared to the solutions above - with two contacts in serial.

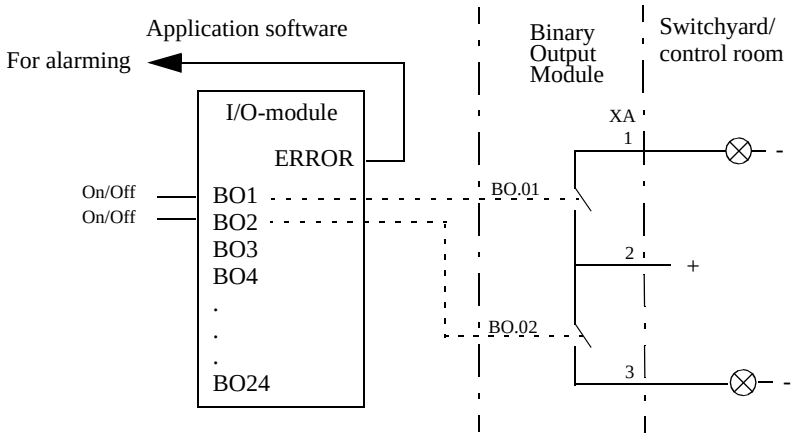

Figure 38: Single output commands

5 Setting

The setting parameters are accessible through the CAP 531 configuration tool. The parameters for the apparatus control modules consist only of time settings.

The appendix shows the parameters and their setting ranges.

6 Testing

The apparatus control function consists of four types of function blocks, which are connected in a delivery-specific way between bays and to the station level. For that reason, test the total function in a system, that is, either in a complete delivery system as an acceptance test (FAT/SAT) or as parts of that system.

7 Appendix

7.1 Function blocks

7.1.1 BAYCONA

BAxx

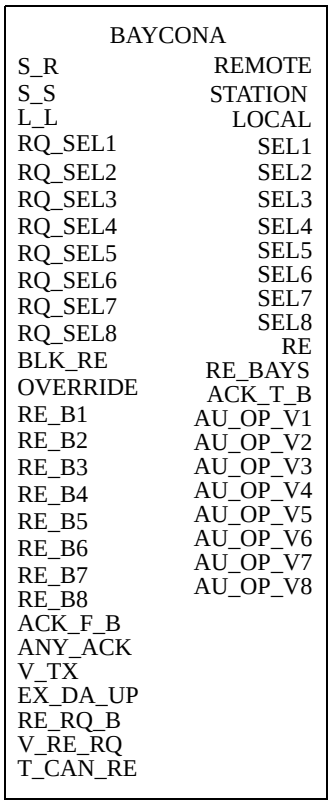

7.1.2 BAYCONB

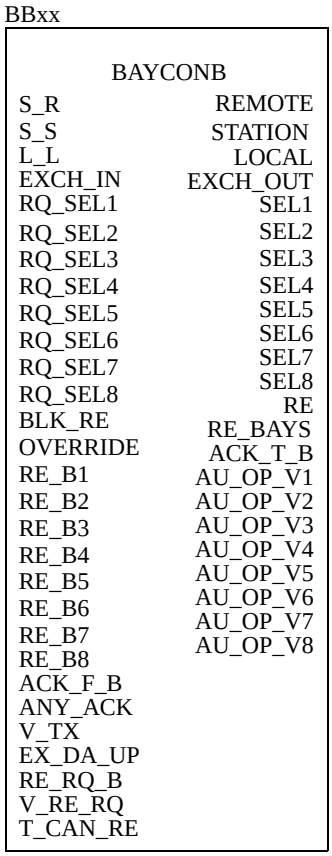
BBxx
BAYCONB
S_R
S_S
L_L
EXCH_IN
RQ_SEL1
RQ_SEL2
RQ_SEL3
RQ_SEL4
RQ_SEL5
RQ_SEL6
RQ_SEL7
RQ_SEL8
BLK_RE
OVERRIDE
RE_B1
RE_B2
RE_B3
RE_B4
RE_B5
RE_B6
RE_B7
RE_B8
ACK_F_B
ANY_ACK
V_TX
EX_DA_UP
RE_RQ_B
V_RE_RQ
T_CAN_RE
REMOTE
STATION
LOCAL
EXCH_OUT
SEL1
SEL2
SEL3
SEL4
SEL5
SEL6
SEL7
SEL8
RE
RE_BAYS
ACK_T_B
AU_OP_V1
AU_OP_V2
AU_OP_V3
AU_OP_V4
AU_OP_V5
AU_OP_V6
AU_OP_V7
AU_OP_V8

7.1.3 BAYCONC

BCxx

BAYCONC	
S_R	REMOTE
S_S	STATION
L_L	LOCAL
RQ_SEL1	SEL1
RQ_SEL2	SEL2
RQ_SEL3	SEL3
RQ_SEL4	SEL4
RQ_SEL5	SEL5
RQ_SEL6	SEL6
RQ_SEL7	SEL7
RQ_SEL8	SEL8
BLK_RE	RE
OVERRIDE	RE_BAYS
RE_B1	ACK_T_B
RE_B2	FDB_SEL1
RE_B3	FDB_SEL2
RE_B4	FDB_SEL3
RE_B5	FDB_SEL4
RE_B6	FDB_SEL5
RE_B7	FDB_SEL6
RE_B8	FDB_SEL7
ACK_F_B	FDB_SEL8
ANY_ACK	BINPERR
V_TX	BOUTERR
EX_DA_UP	AU_OP_V1
RE_RQ_B	AU_OP_V2
V_RE_RQ	AU_OP_V3
SEL_ACT1	AU_OP_V4
SEL_ACT2	AU_OP_V5
SEL_ACT3	AU_OP_V6
SEL_ACT4	AU_OP_V7
SEL_ACT5	AU_OP_V8
SEL_ACT6	
SEL_ACT7	
SEL_ACT8	
SEL_CH1	
SEL_CH2	
INPBOERR	
OUTBOERR	
T_CAN_RE	

7.1.4 BAYCOND

BDxx

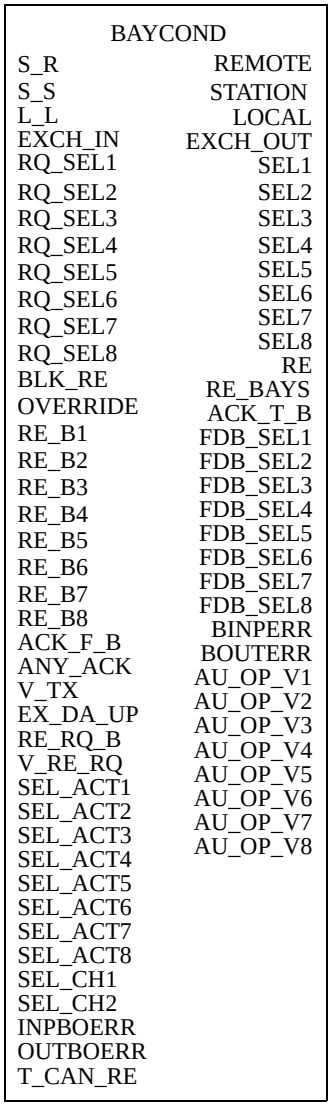

7.1.5 BAYCONE

BExx

BAYCONE

S_R	REMOTE
S_S	STATION
L_L	LOCAL
RQ_SEL1	SEL1
RQ_SEL2	SEL2
RQ_SEL3	SEL3
RQ_SEL4	SEL4
RQ_SEL5	SEL5
RQ_SEL6	SEL6
RQ_SEL7	SEL7
RQ_SEL8	SEL8
BLK_RE	RE
OVERRIDE	RE_BAYS
RE_B1	ACK_T_B
RE_B2	FDB_SEL1
RE_B3	FDB_SEL2
RE_B4	FDB_SEL3
RE_B5	FDB_SEL4
RE_B6	FDB_SEL5
RE_B7	FDB_SEL6
RE_B8	FDB_SEL7
ACK_F_B	FDB_SEL8
ANY_ACK	BINPERR
V_TX	BOUTERR
EX_DA_UP	BRLYERR
RE_RQ_B	AU_OP_V1
V_RE_RQ	AU_OP_V2
SEL_ACT1	AU_OP_V3
SEL_ACT2	AU_OP_V4
SEL_ACT3	AU_OP_V5
SEL_ACT4	AU_OP_V6
SEL_ACT5	AU_OP_V7
SEL_ACT6	AU_OP_V8
SEL_ACT7	
SEL_ACT8	
SEL_CH1	
SEL_CH2	
INPBOERR	
OUTBOERR	
SEL_FDB1	
SEL_FDB2	
SEL_FDB3	
SEL_FDB4	
SEL_FDB5	
SEL_FDB6	
SEL_FDB7	
SEL_FDB8	
T_CAN_RE	

7.1.6 BAYCONF

BFxx

BAYCONF

S_R	REMOTE
S_S	STATION
L_L	LOCAL
EXCH_IN	EXCH_OUT
RQ_SEL1	SEL1
RQ_SEL2	SEL2
RQ_SEL3	SEL3
RQ_SEL4	SEL4
RQ_SEL5	SEL5
RQ_SEL6	SEL6
RQ_SEL7	SEL7
RQ_SEL8	SEL8
BLK_RE	RE
OVERRIDE	RE_BAYS
RE_B1	ACK_T_B
RE_B2	FDB_SEL1
RE_B3	FDB_SEL2
RE_B4	FDB_SEL3
RE_B5	FDB_SEL4
RE_B6	FDB_SEL5
RE_B7	FDB_SEL6
RE_B8	FDB_SEL7
ACK_F_B	FDB_SEL8
ANY_ACK	BINPERR
V_TX	BOUTERR
EX_DA_UP	BRLYERR
RE_RQ_B	AU_OP_V1
V_RE_RQ	AU_OP_V2
SEL_ACT1	AU_OP_V3
SEL_ACT2	AU_OP_V4
SEL_ACT3	AU_OP_V5
SEL_ACT4	AU_OP_V6
SEL_ACT5	AU_OP_V7
SEL_ACT6	AU_OP_V8
SEL_ACT7	
SEL_ACT8	
SEL_CH1	
SEL_CH2	
INPBOERR	
OUTBOERR	
SEL_FDB1	
SEL_FDB2	
SEL_FDB3	
SEL_FDB4	
SEL_FDB5	
SEL_FDB6	
SEL_FDB7	
SEL_FDB8	
T_CAN_RE	

7.1.7 COMCON

COxx

COMCON	
SEL_RES	RQ_SEL
SELECT	OPEN
R_SEL_O	CLOSE
R_SEL_C	EXECUTE
R_OPEN	CANCEL
R_CLOSE	OVERRIDE
R_CANCEL	LO_OP_T
REMOTE	RES_ERR
S_SEL_O	R_OP
S_SEL_C	S_OP
S_OPEN	BLK_OP
S_CLOSE	DBL_OP
S_CANCEL	L_OP
S_BLK_OP	BLK_UPD
S_DBL_OP	PROC_UPD
S_IR_OVR	MA_UPD_O
S_BL_UPD	MA_UPD_C
S_PR_UPD	AU_MODE
S_MA_U_O	SEQ_STA
S_MA_U_C	
STATION	
L_SEL_O	
L_SEL_C	
L_OPEN	
L_CLOSE	
L_IR_OVR	
LOCAL	
AU_SEL_O	
AU_SEL_C	
AU_OPEN	
AU_CLOSE	
AU_CANC	
SEL_SEQ	
T_LO_OP	
T_RES	

7.1.8 SWICONA

SAxx

SWICONA

POSIND_V	OX
POS_L1_O	CX
POS_L2_O	POS_ERR
POS_L3_O	POL_DISC
POS_L1_C	MA_UPD_P
POS_L2_C	SEL_OPEN
POS_L3_C	SEL_CLOS
BLK_UPD	EXE_OPEN
PROC_UPD	EXE_CLOS
MA_UPD_O	SEL_RES
MA_UPD_C	SEL_ERR
UPD_BLK	CMD_ERR
SELECT	AU_OP_P
FDB_SEL	BLK_AR
OPEN	
CLOSE	
AU_OP_V	
EXECUTE	
CANCEL	
BLK_OPEN	
BLK_CLOS	
INT_LOCK	
SY_RUN	
SY_FAIL	
SY_OK	
AR_SEL	
T_POSERR	
T_POL	
T_SEL	
T_START	
T_PULSE	

7.1.9 SWICONB

SBxx

SWICONB

POSIND_V	OX
POS_L1_O	CX
POS_L2_O	POS_ERR
POS_L3_O	POL_DISC
POS_L1_C	MA_UPD_P
POS_L2_C	SEL_OPEN
POS_L3_C	SEL_CLOS
BLK_UPD	EXE_OPEN
PROC_UPD	EXE_CLOS
MA_UPD_O	SEL_RES
MA_UPD_C	SEL_ERR
UPD_BLK	CMD_ERR
SELECT	AU_OP_P
FDB_SEL	BLK_AR
OPEN	
CLOSE	
AU_OP_V	
EXECUTE	
CANCEL	
BLK_OPEN	
BLK_CLOS	
INT_LOCK	
SY_RUN	
SY_FAIL	
AR_SEL	
T_POSERR	
T_POL	
T_SEL	
T_START	
T_PULSE	

7.1.10 SWICONC

SCxx

SWICONC	
POSIND_V	OX
POS_O	CX
POS_C	POS_ERR
BLK_UPD	MA_UPD_P
PROC_UPD	SEL_OPEN
MA_UPD_O	SEL_CLOS
MA_UPD_C	EXE_OPEN
UPD_BLK	EXE_CLOS
SELECT	SEL_RES
FDB_SEL	SEL_ERR
OPEN	CMD_ERR
CLOSE	AU_OP_P
EXECUTE	
CANCEL	
BLK_OPEN	
BLK_CLOS	
INT_LOCK	
AU_OP_V	
T_POSERR	
T_PULSE	
T_SEL	
T_START	

7.1.11 BLKCONK

BKxx

BLKCONK	
BLK_1_1	BLK_OUT1
BLK_1_2	BLK_OUT2
BLK_1_3	BLK_OUT3
BLKCMD1	
DBLCMD1	
BYPASS1	
BLK_2_1	
BLK_2_2	
BLK_2_3	
BLK_CMD2	
BLK_CMD2	
BYPASS2	
BLK_3_1	
BLK_3_2	
BLK_3_3	
BLKCMD3	
DBLCMD3	
BYPASS3	

7.1.12 BLKCONL

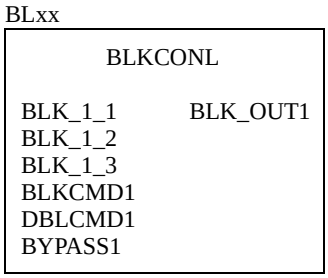

7.2 Signal lists

Table 1: Signal list for BAYCONA

Block	Signal	Type	Description
BAxx-	ACK_F_B	IN	Input for acknowledging reservation of other bays
BAxx-	ANY_ACK	IN	Input indicating that at least one acknowledge is still active
BAxx-	BLK_RE	IN	Input for blocking all reservations
BAxx-	EX_DA_UP	IN	The program that acknowledged the reservation is running
BAxx-	L_L	IN	Input to change operator place to Local
BAxx-	OVERRIDE	IN	Overriding reservation function including blocking by BLK_RE
BAxx-	RE_B1	IN	Reservation of the own bay only (i.e. not other bays) at selection from apparatus 1
BAxx-	RE_B2	IN	Reservation of the own bay only (i.e. not other bays) at selection from apparatus 2
BAxx-	RE_B3	IN	Reservation of the own bay only (i.e. not other bays) at selection from apparatus 3
BAxx-	RE_B4	IN	Reservation of the own bay only (i.e. not other bays) at selection from apparatus 4
BAxx-	RE_B5	IN	Reservation of the own bay only (i.e. not other bays) at selection from apparatus 5
BAxx-	RE_B6	IN	Reservation of the own bay only (i.e. not other bays) at selection from apparatus 6
BAxx-	RE_B7	IN	Reservation of the own bay only (i.e. not other bays) at selection from apparatus 7
BAxx-	RE_B8	IN	Reservation of the own bay only (i.e. not other bays) at selection from apparatus 8
BAxx-	RE_RQ_B	IN	Request for reservation from other bays
BAxx-	RQ_SEL1	IN	Request for selection and reservation of apparatus 1
BAxx-	RQ_SEL2	IN	Request for selection and reservation of apparatus 2
BAxx-	RQ_SEL3	IN	Request for selection and reservation of apparatus 3
BAxx-	RQ_SEL4	IN	Request for selection and reservation of apparatus 4
BAxx-	RQ_SEL5	IN	Request for selection and reservation of apparatus 5
BAxx-	RQ_SEL6	IN	Request for selection and reservation of apparatus 6
BAxx-	RQ_SEL7	IN	Request for selection and reservation of apparatus 7
BAxx-	RQ_SEL8	IN	Request for selection and reservation of apparatus 8

Table 1: Signal list for BAYCONA (Continued)

Block	Signal	Type	Description
BAxx-	S_R	IN	Input to change operator place to remote (pulse input)
BAxx-	S_S	IN	Input to change operator place to Station (pulse input)
BAxx-	V_RE_RQ	IN	Input is 1 for valid request of reservation from any bay
BAxx-	V_TX	IN	Indication for valid transmission of reservation signals
BAxx-	ACK_T_B	OUT	Acknowledge to other bays that this bay is reserved
BAxx-	AU_OP_V1	OUT	Automatic operation permitted, i.e. the operator place selector is not in Local position, the apparatus is not reserved or not manual selected for apparatus 1
BAxx-	AU_OP_V2	OUT	Automatic operation permitted, i.e. the operator place selector is not in Local position, the apparatus is not reserved or not manual selected for apparatus 2
BAxx-	AU_OP_V3	OUT	Automatic operation permitted, i.e. the operator place selector is not in Local position, the apparatus is not reserved or not manual selected for apparatus 3
BAxx-	AU_OP_V4	OUT	Automatic operation permitted, i.e. the operator place selector is not in Local position, the apparatus is not reserved or not manual selected for apparatus 4
BAxx-	AU_OP_V5	OUT	Automatic operation permitted, i.e. the operator place selector is not in Local position, the apparatus is not reserved or not manual selected for apparatus 5
BAxx-	AU_OP_V6	OUT	Automatic operation permitted, i.e. the operator place selector is not in Local position, the apparatus is not reserved or not manual selected for apparatus 6
BAxx-	AU_OP_V7	OUT	Automatic operation permitted, i.e. the operator place selector is not in Local position, the apparatus is not reserved or not manual selected for apparatus 7
BAxx-	AU_OP_V8	OUT	Automatic operation permitted, i.e. the operator place selector is not in Local position, the apparatus is not reserved or not manual selected for apparatus 8
BAxx-	LOCAL	OUT	Indication of Local operator place
BAxx-	RE	OUT	A reservation has been made in this bay
BAxx-	RE_BAYS	OUT	Request for reservation of other bays
BAxx-	REMOTE	OUT	Indication of Remote operator place
BAxx-	SEL1	OUT	Selection for apparatus 1
BAxx-	SEL2	OUT	Selection for apparatus 2
BAxx-	SEL3	OUT	Selection for apparatus 3
BAxx-	SEL4	OUT	Selection for apparatus 4
BAxx-	SEL5	OUT	Selection for apparatus 5
BAxx-	SEL6	OUT	Selection for apparatus 6
BAxx-	SEL7	OUT	Selection for apparatus 7
BAxx-	SEL8	OUT	Selection for apparatus 8
BAxx-	STATION	OUT	Indication of Station operator place
BAxx	T_CAN_RE		See setting table for BAxx thru BFxx

Table 2: Signal list for BAYCONB

Block	Signal	Type	Description
BB01-	ACK_F_B	IN	Input for acknowledging reservation of other bays
BB01-	ANY_ACK	IN	Input indicating that an acknowledge is still active
BB01-	BLK_RE	IN	Input for blocking all reservations
BB01-	EX_DA_UP	IN	Input is 1 if the program that acknowledged the reservation is running
BBxx-	EXCH_IN	IN	Input for information exchange with other BAYCONs in bays with more than 8 apparatuses
BBxx-	L_L	IN	Input to change operator place to Local
BBxx-	OVERRIDE	IN	Overriding reservation function including blocking by BLK_RE
BBxx-	RE_B1	IN	Reservation of the own bay only (i.e. not other bays) at selection from apparatus 1
BBxx-	RE_B2	IN	Reservation of the own bay only (i.e. not other bays) at selection from apparatus 2
BBxx-	RE_B3	IN	Reservation of the own bay only (i.e. not other bays) at selection from apparatus 3
BBxx-	RE_B4	IN	Reservation of the own bay only (i.e. not other bays) at selection from apparatus 4
BBxx-	RE_B5	IN	Reservation of the own bay only (i.e. not other bays) at selection from apparatus 5
BBxx-	RE_B6	IN	Reservation of the own bay only (i.e. not other bays) at selection from apparatus 6
BBxx-	RE_B7	IN	Reservation of the own bay only (i.e. not other bays) at selection from apparatus 7
BBxx-	RE_B8	IN	Reservation of the own bay only (i.e. not other bays) at selection from apparatus 8
BBxx-	RE_RQ_B	IN	Request for reservation from other bays
BBxx-	RQ_SEL1	IN	Request for selection and reservation of apparatus 1
BBxx-	RQ_SEL2	IN	Request for selection and reservation of apparatus 2
BBxx-	RQ_SEL3	IN	Request for selection and reservation of apparatus 3
BBxx-	RQ_SEL4	IN	Request for selection and reservation of apparatus 4
BBxx-	RQ_SEL5	IN	Request for selection and reservation of apparatus 5
BBxx-	RQ_SEL6	IN	Request for selection and reservation of apparatus 6
BBxx-	RQ_SEL7	IN	Request for selection and reservation of apparatus 7
BBxx-	RQ_SEL8	IN	Request for selection and reservation of apparatus 8
BBxx-	S_R	IN	Input to change operator place to Remote (pulse input)
BBxx-	S_S	IN	Input to change operator place to Station (pulse input)
BBxx-	V_RE_RQ	IN	Input is 1 for valid request of reservation from any bay
BBxx-	V_TX	IN	Indication for valid transmission of reservation signals
BBxx-	ACK_T_B	OUT	Acknowledge to other bays that this bay is reserved
BBxx-	AU_OP_V1	OUT	Automatic operation permitted, i.e. the operator place selector is not in Local position, the apparatus is not reserved or not manual selected for apparatus 1

Table 2: Signal list for BAYCONB (Continued)

Block	Signal	Type	Description
BBxx-	AU_OP_V2	OUT	Automatic operation permitted, i.e. the operator place selector is not in Local position, the apparatus is not reserved or not manual selected for apparatus 2
BBxx-	AU_OP_V3	OUT	Automatic operation permitted, i.e. the operator place selector is not in Local position, the apparatus is not reserved or not manual selected for apparatus 3
BBxx-	AU_OP_V4	OUT	Automatic operation permitted, i.e. the operator place selector is not in Local position, the apparatus is not reserved or not manual selected for apparatus 4
BBxx-	AU_OP_V5	OUT	Automatic operation permitted, i.e. the operator place selector is not in Local position, the apparatus is not reserved or not manual selected for apparatus 5
BBxx-	AU_OP_V6	OUT	Automatic operation permitted, i.e. the operator place selector is not in Local position, the apparatus is not reserved or not manual selected for apparatus 6
BBxx-	AU_OP_V7	OUT	Automatic operation permitted, i.e. the operator place selector is not in Local position, the apparatus is not reserved or not manual selected for apparatus 7
BBxx-	AU_OP_V8	OUT	Automatic operation permitted, i.e. the operator place selector is not in Local position, the apparatus is not reserved or not manual selected for apparatus 8
BBxx-	EXCH_OUT	OUT	Output for information exchange with other BAYCONs in bays with more than 8 apparatuses
BBxx-	LOCAL	OUT	Indication of Local operator place
BBxx-	RE	OUT	A reservation has been made in this bay
BBxx-	RE_BAYS	OUT	Request for reservation of other bays
BBxx-	REMOTE	OUT	Indication of Remote operator place
BBxx-	SEL1	OUT	Apparatus 1 is selected after reservation acknowledgement from other bays
BBxx-	SEL2	OUT	Apparatus 2 is selected after reservation acknowledgement from other bays
BBxx-	SEL3	OUT	Apparatus 3 is selected after reservation acknowledgement from other bays
BBxx-	SEL4	OUT	Apparatus 4 is selected after reservation acknowledgement from other bays
BBxx-	SEL5	OUT	Apparatus 5 is selected after reservation acknowledgement from other bays
BBxx-	SEL6	OUT	Apparatus 6 is selected after reservation acknowledgement from other bays
BBxx-	SEL7	OUT	Apparatus 7 is selected after reservation acknowledgement from other bays
BBxx-	SEL8	OUT	Apparatus 8 is selected after reservation acknowledgement from other bays
BBxx-	STATION	OUT	Indication of Station operator place
BBxx	T_CAN_RE		See setting table for BAxx thru BFxx

Table 3: Signal list for BAYCONC

Block	Signal	Type	Description
BCxx-	ACK_F_B	IN	Input for acknowledging the reservation of other bays
BCxx-	ANY_ACK	IN	Input indicating that at least one acknowledge is still active

Table 3: Signal list for BAYCONC (Continued)

Block	Signal	Type	Description
BCxx-	BLK_RE	IN	Input for blocking of all reservations
BCxx-	EX_DA_UP	IN	Input is 1 if the program that acknowledged the reservation is running
BCxx-	INPBOERR	IN	Input for binary input board error
BCxx-	L_L	IN	Input to change operator place to Local
BCxx-	OUTBOERR	IN	Input for binary output board error
BCxx-	OVERRIDE	IN	Input for overriding the reservation function including the blocking by BLK_RE
BCxx-	RE_B1	IN	Reservation of the own bay only (i.e. not other bays) at selection from apparatus 1
BCxx-	RE_B2	IN	Reservation of the own bay only (i.e. not other bays) at selection from apparatus 2
BCxx-	RE_B3	IN	Reservation of the own bay only (i.e. not other bays) at selection from apparatus 3
BCxx-	RE_B4	IN	Reservation of the own bay only (i.e. not other bays) at selection from apparatus 4
BCxx-	RE_B5	IN	Reservation of the own bay only (i.e. not other bays) at selection from apparatus 5
BCxx-	RE_B6	IN	Reservation of the own bay only (i.e. not other bays) at selection from apparatus 6
BCxx-	RE_B7	IN	Reservation of the own bay only (i.e. not other bays) at selection from apparatus 7
BCxx-	RE_B8	IN	Reservation of the own bay only (i.e. not other bays) at selection from apparatus 8
BCxx-	RE_RQ_B	IN	Request for reservation from other bays
BCxx-	RQ_SEL1	IN	Request for selection and reservation of apparatus 1
BCxx-	RQ_SEL2	IN	Request for selection and reservation of apparatus 2
BCxx-	RQ_SEL3	IN	Request for selection and reservation of apparatus 3
BCxx-	RQ_SEL4	IN	Request for selection and reservation of apparatus 4
BCxx-	RQ_SEL5	IN	Request for selection and reservation of apparatus 5
BCxx-	RQ_SEL6	IN	Request for selection and reservation of apparatus 6
BCxx-	RQ_SEL7	IN	Request for selection and reservation of apparatus 7
BCxx-	RQ_SEL8	IN	Request for selection and reservation of apparatus 8
BCxx-	S_R	IN	Input to change operator place to Remote (pulse input)
BCxx-	S_S	IN	Input to change operator place to Station (pulse input)
BCxx-	SEL_ACT1	IN	Selection of apparatus 1 is activated by the program and the selection relay should be energised
BCxx-	SEL_ACT2	IN	Selection of apparatus 2 is activated by the program and the selection relay should be energised
BCxx-	SEL_ACT3	IN	Selection of apparatus 3 is activated by the program and the selection relay should be energised
BCxx-	SEL_ACT4	IN	Selection of apparatus 4 is activated by the program and the selection relay should be energised
BCxx-	SEL_ACT5	IN	Selection of apparatus 5 is activated by the program and the selection relay should be energised

Table 3: Signal list for BAYCONC (Continued)

Block	Signal	Type	Description
BCxx-	SEL_ACT6	IN	Selection of apparatus 6 is activated by the program and the selection relay should be energised
BCxx-	SEL_ACT7	IN	Selection of apparatus 7 is activated by the program and the selection relay should be energised
BCxx-	SEL_ACT8	IN	Selection of apparatus 8 is activated by the program and the selection relay should be energised
BCxx-	SEL_CH1	IN	Indication that no selection or execution relay is energised
BCxx-	SEL_CH2	IN	Indication that at least one selection or execution relay is energised
BCxx-	V_RE_RQ	IN	Input is 1 for valid request of reservation from any bay
BCxx-	V_TX	IN	Indication for valid transmission of the reservation signals
BCxx-	ACK_T_B	OUT	Acknowledgement to other bays that this bay is reserved
BCxx-	AU_OP_V1	OUT	Automatic operation permitted, i.e. the operator place selector is not in Local position, the apparatus is not reserved or not manual selected for apparatus 1
BCxx-	AU_OP_V2	OUT	Automatic operation permitted, i.e. the operator place selector is not in Local position, the apparatus is not reserved or not manual selected for apparatus 2
BCxx-	AU_OP_V3	OUT	Automatic operation permitted, i.e. the operator place selector is not in Local position, the apparatus is not reserved or not manual selected for apparatus 3
BCxx-	AU_OP_V4	OUT	Automatic operation permitted, i.e. the operator place selector is not in Local position, the apparatus is not reserved or not manual selected for apparatus 4
BCxx-	AU_OP_V5	OUT	Automatic operation permitted, i.e. the operator place selector is not in Local position, the apparatus is not reserved or not manual selected for apparatus 5
BCxx-	AU_OP_V6	OUT	Automatic operation permitted, i.e. the operator place selector is not in Local position, the apparatus is not reserved or not manual selected for apparatus 6
BCxx-	AU_OP_V7	OUT	Automatic operation permitted, i.e. the operator place selector is not in Local position, the apparatus is not reserved or not manual selected for apparatus 7
BCxx-	AU_OP_V8	OUT	Automatic operation permitted, i.e. the operator place selector is not in Local position, the apparatus is not reserved or not manual selected for apparatus 8
BCxx-	BINPERR	OUT	Indication for binary input board error
BCxx-	BOUTERR	OUT	Indication for binary output board error
BCxx-	FDB_SEL1	OUT	Correct selection relay is energised for apparatus 1
BCxx-	FDB_SEL2	OUT	Correct selection relay is energized for apparatus 2
BCxx-	FDB_SEL3	OUT	Correct selection relay is energized for apparatus 3
BCxx-	FDB_SEL4	OUT	Correct selection relay is energized for apparatus 4
BCxx-	FDB_SEL5	OUT	Correct selection relay is energized for apparatus 5
BCxx-	FDB_SEL6	OUT	Correct selection relay is energized for apparatus 6
BCxx-	FDB_SEL7	OUT	Correct selection relay is energized for apparatus 7
BCxx-	FDB_SEL8	OUT	Correct selection relay is energized for apparatus 8

Table 3: Signal list for BAYCONC (Continued)

Block	Signal	Type	Description
BCxx-	LOCAL	OUT	Indication of Local operator place
BCxx-	RE	OUT	A reservation has been made in this bay
BCxx-	RE_BAYS	OUT	Request for reservation of other bays
BCxx-	REMOTE	OUT	Indication of Remote operator place
BCxx-	SEL1	OUT	Apparatus 2 is selected after reservation acknowledgement from other bays
BCxx-	SEL2	OUT	Apparatus 1 is selected after reservation acknowledgement from other bays
BCxx-	SEL3	OUT	Apparatus 3 is selected after reservation acknowledgement from other bays
BCxx-	SEL4	OUT	Apparatus 4 is selected after reservation acknowledgement from other bays
BCxx-	SEL5	OUT	Apparatus 5 is selected after reservation acknowledgement from other bays
BCxx-	SEL6	OUT	Apparatus 6 is selected after reservation acknowledgement from other bays
BCxx-	SEL7	OUT	Apparatus 7 is selected after reservation acknowledgement from other bays
BCxx-	SEL8	OUT	Apparatus 8 is selected after reservation acknowledgement from other bays
BCxx-	STATION	OUT	Indication of Station operator place
BCxx	T_CAN_RE		See setting table for BAxx thru BFxx

Table 4: Signal list for BAYCOND

Block	Signal	Type	Description
BDxx-	ACK_F_B	IN	Input for acknowledging the reservation of other bays
BDxx-	ANY_ACK	IN	Input indicating that at least one acknowledge is still active
BDxx-	BLK_RE	IN	Input for blocking of all reservations
BDxx-	EX_DA_UP	IN	Input is 1 if the program that acknowledged the reservation is running
BDxx-	EXCH_IN	IN	Input for information exchange with other BAYCONs in bays with more than 8 apparatuses
BDxx-	INPBOERR	IN	Input for binary input board error
BDxx-	L_L	IN	Input to change operator place to Local
BDxx-	OUTBOERR	IN	Input for binary output board error
BDxx-	OVERRIDE	IN	Overriding reservation function including blocking by BLK_RE
BDxx-	RE_B1	IN	Reservation of the own bay only (i.e. not other bays) at selection from apparatus 1
BDxx-	RE_B2	IN	Reservation of the own bay only (i.e. not other bays) at selection from apparatus 2
BDxx-	RE_B3	IN	Reservation of the own bay only (i.e. not other bays) at selection from apparatus 3
BDxx-	RE_B4	IN	Reservation of the own bay only (i.e. not other bays) at selection from apparatus 4
BDxx-	RE_B5	IN	Reservation of the own bay only (i.e. not other bays) at selection from apparatus 5
BDxx-	RE_B6	IN	Reservation of the own bay only (i.e. not other bays) at selection from apparatus 6

Table 4: Signal list for BAYCOND (Continued)

Block	Signal	Type	Description
BDxx-	RE_B7	IN	Reservation of the own bay only (i.e. not other bays) at selection from apparatus 7
BDxx-	RE_B8	IN	Reservation of the own bay only (i.e. not other bays) at selection from apparatus 8
BDxx-	RE_RQ_B	IN	Request for reservation from other bays
BDxx-	RQ_SEL1	IN	Request for selection and reservation of apparatus 1
BDxx-	RQ_SEL2	IN	Request for selection and reservation of apparatus 2
BDxx-	RQ_SEL3	IN	Request for selection and reservation of apparatus 3
BDxx-	RQ_SEL4	IN	Request for selection and reservation of apparatus 4
BDxx-	RQ_SEL5	IN	Request for selection and reservation of apparatus 5
BDxx-	RQ_SEL6	IN	Request for selection and reservation of apparatus 6
BDxx-	RQ_SEL7	IN	Request for selection and reservation of apparatus 7
BDxx-	RQ_SEL8	IN	Request for selection and reservation of apparatus 8
BDxx-	S_R	IN	Input to change operator place to Remote (pulse input)
BDxx-	S_S	IN	Input to change operator place to Station (pulse input)
BDxx-	SEL_ACT1	IN	Selection of apparatus 1 is activated by the program and the selection relay should be energised
BDxx-	SEL_ACT2	IN	Selection of apparatus 2 is activated by the program and the selection relay should be energised
BDxx-	SEL_ACT3	IN	Selection of apparatus 3 is activated by the program and the selection relay should be energised
BDxx-	SEL_ACT4	IN	Selection of apparatus 4 is activated by the program and the selection relay should be energised
BDxx-	SEL_ACT5	IN	Selection of apparatus 5 is activated by the program and the selection relay should be energised
BDxx-	SEL_ACT6	IN	Selection of apparatus 6 is activated by the program and the selection relay should be energised
BDxx-	SEL_ACT7	IN	Selection of apparatus 7 is activated by the program and the selection relay should be energised
BDxx-	SEL_ACT8	IN	Selection of apparatus 8 is activated by the program and the selection relay should be energised
BDxx-	SEL_CH1	IN	Indication that no selection or execution relay is energised
BDxx-	SEL_CH2	IN	Indication that at least one selection or execution relay is energised
BDxx-	V_RE_RQ	IN	Input is 1 for valid request of reservation from any bay
BDxx-	V_TX	IN	Indication for valid transmission of the reservation signals
BDxx-	ACK_T_B	OUT	Acknowledgement to other bays that this bay is reserved
BDxx-	AU_OP_V1	OUT	Automatic operation permitted, i.e. the operator place selector is not in Local position, the apparatus is not reserved or not manual selected for apparatus 1
BDxx-	AU_OP_V2	OUT	Automatic operation permitted, i.e. the operator place selector is not in Local position, the apparatus is not reserved or not manual selected for apparatus 2
BDxx-	AU_OP_V3	OUT	Automatic operation permitted, i.e. the operator place selector is not in Local position, the apparatus is not reserved or not manual selected for apparatus 3

Table 4: Signal list for BAYCOND (Continued)

Block	Signal	Type	Description
BDxx-	AU_OP_V4	OUT	Automatic operation permitted, i.e. the operator place selector is not in Local position, the apparatus is not reserved or not manual selected for apparatus 4
BDxx-	AU_OP_V5	OUT	Automatic operation permitted, i.e. the operator place selector is not in Local position, the apparatus is not reserved or not manual selected for apparatus 5
BDxx-	AU_OP_V6	OUT	Automatic operation permitted, i.e. the operator place selector is not in Local position, the apparatus is not reserved or not manual selected for apparatus 6
BDxx-	AU_OP_V7	OUT	Automatic operation permitted, i.e. the operator place selector is not in Local position, the apparatus is not reserved or not manual selected for apparatus 7
BDxx-	AU_OP_V8	OUT	Automatic operation permitted, i.e. the operator place selector is not in Local position, the apparatus is not reserved or not manual selected for apparatus 8
BDxx-	BINPERR	OUT	Indication for binary input board error
BDxx-	BOUTERR	OUT	Indication for binary output board error
BDxx-	EXCH_OUT	OUT	Output for information exchange with other BAYCONs in bays with more than 8 apparatuses
BDxx-	FDB_SEL1	OUT	Correct selection relay is energised for apparatus 1
BDxx-	FDB_SEL2	OUT	Correct selection relay is energized for apparatus 2
BDxx-	FDB_SEL3	OUT	Correct selection relay is energized for apparatus 3
BDxx-	FDB_SEL4	OUT	Correct selection relay is energized for apparatus 4
BDxx-	FDB_SEL5	OUT	Correct selection relay is energized for apparatus 5
BDxx-	FDB_SEL6	OUT	Correct selection relay is energized for apparatus 6
BDxx-	FDB_SEL7	OUT	Correct selection relay is energized for apparatus 7
BDxx-	FDB_SEL8	OUT	Correct selection relay is energized for apparatus 8
BDxx-	LOCAL	OUT	Indication of Local operator place
BDxx-	RE	OUT	A reservation has been made in this bay
BDxx-	RE_BAYS	OUT	Request for reservation of other bays
BDxx-	REMOTE	OUT	Indication of Remote operator place
BDxx-	SEL1	OUT	Apparatus 1 is selected after reservation acknowledgement from other bays
BDxx-	SEL2	OUT	Apparatus 2 is selected after reservation acknowledgement from other bays
BDxx-	SEL3	OUT	Apparatus 3 is selected after reservation acknowledgement from other bays
BDxx-	SEL4	OUT	Apparatus 4 is selected after reservation acknowledgement from other bays
BDxx-	SEL5	OUT	Apparatus 5 is selected after reservation acknowledgement from other bays
BDxx-	SEL6	OUT	Apparatus 6 is selected after reservation acknowledgement from other bays
BDxx-	SEL7	OUT	Apparatus 7 is selected after reservation acknowledgement from other bays
BDxx-	SEL8	OUT	Apparatus 8 is selected after reservation acknowledgement from other bays
BDxx-	STATION	OUT	Indication of Station operator place
BDxx	T_CAN_RE		See setting table for BAxx thru BFxx

Table 5: Signal list for BAYCONE

Block	Signal	Type	Description
BExx-	ACK_F_B	IN	Input for acknowledging the reservation of other bays
BExx-	ANY_ACK	IN	Input indicating that at least one acknowledge is still active
BExx-	BLK_RE	IN	Input for blocking all reservations
BExx-	EX_DA_UP	IN	Input is 1 if the program that acknowledged the reservation is running
BExx-	INPBOERR	IN	Input for binary input board error
BExx-	L_L	IN	Input to change operator place to Local
BExx-	OUTBOERR	IN	Input for binary output board error
BExx-	OVERRIDE	IN	Input for overriding the reservation function including the blocking by BLK_RE
BExx-	RE_B1	IN	Reservation of the own bay only (i.e. not other bays) at selection from apparatus 1
BExx-	RE_B2	IN	Reservation of the own bay only (i.e. not other bays) at selection from apparatus 2
BExx-	RE_B3	IN	Reservation of the own bay only (i.e. not other bays) at selection from apparatus 3
BExx-	RE_B4	IN	Reservation of the own bay only (i.e. not other bays) at selection from apparatus 4
BExx-	RE_B5	IN	Reservation of the own bay only (i.e. not other bays) at selection from apparatus 5
BExx-	RE_B6	IN	Reservation of the own bay only (i.e. not other bays) at selection from apparatus 6
BExx-	RE_B7	IN	Reservation of the own bay only (i.e. not other bays) at selection from apparatus 7
BExx-	RE_B8	IN	Reservation of the own bay only (i.e. not other bays) at selection from apparatus 8
BExx-	RE_RQ_B	IN	Request for reservation from other bays
BExx-	RQ_SEL1	IN	Request for selection and reservation of apparatus 1
BExx-	RQ_SEL2	IN	Request for selection and reservation of apparatus 2
BExx-	RQ_SEL3	IN	Request for selection and reservation of apparatus 3
BExx-	RQ_SEL4	IN	Request for selection and reservation of apparatus 4
BExx-	RQ_SEL5	IN	Request for selection and reservation of apparatus 5
BExx-	RQ_SEL6	IN	Request for selection and reservation of apparatus 6
BExx-	RQ_SEL7	IN	Request for selection and reservation of apparatus 7
BExx-	RQ_SEL8	IN	Request for selection and reservation of apparatus 8
BExx-	S_R	IN	Input to change operator place to Remote (pulse input)
BExx-	S_S	IN	Input to change operator place to Station (pulse input)
BExx-	SEL_ACT1	IN	Selection of apparatus 1 is activated by the program and the selection relay should be energised
BExx-	SEL_ACT2	IN	Selection of apparatus 2 is activated by the program and the selection relay should be energised
BExx-	SEL_ACT3	IN	Selection of apparatus 3 is activated by the program and the selection relay should be energised
BExx-	SEL_ACT4	IN	Selection of apparatus 4 is activated by the program and the selection relay should be energised

Table 5: Signal list for BAYCONE (Continued)

Block	Signal	Type	Description
BExx-	SEL_ACT5	IN	Selection of apparatus 5 is activated by the program and the selection relay should be energised
BExx-	SEL_ACT6	IN	Selection of apparatus 6 is activated by the program and the selection relay should be energised
BExx-	SEL_ACT7	IN	Selection of apparatus 7 is activated by the program and the selection relay should be energised
BExx-	SEL_ACT8	IN	Selection of apparatus 8 is activated by the program and the selection relay should be energised
BExx-	SEL_CH1	IN	Indication that no selection or execution relay is energised
BExx-	SEL_CH2	IN	Indication that at least one selection or execution relay is energised
BExx-	SEL_FDB1	IN	Input for individual selection relay energising of apparatus 1
BExx-	SEL_FDB2	IN	Input for individual selection relay energising of apparatus 2
BExx-	SEL_FDB3	IN	Input for individual selection relay energising of apparatus 3
BExx-	SEL_FDB4	IN	Input for individual selection relay energising of apparatus 4
BExx-	SEL_FDB5	IN	Input for individual selection relay energising of apparatus 5
BExx-	SEL_FDB6	IN	Input for individual selection relay energising of apparatus 6
BExx-	SEL_FDB7	IN	Input for individual selection relay energising of apparatus 7
BExx-	SEL_FDB8	IN	Input for individual selection relay energising of apparatus 8
BExx-	V_RE_RQ	IN	Input is 1 for valid request of reservation from any bay
BExx-	V_TX	IN	Indication for valid transmission of the reservation signals
BExx-	ACK_T_B	OUT	Acknowledgement to other bays that this bay is reserved
BExx-	AU_OP_V1	OUT	Automatic operation permitted, i.e. the operator place selector is not in Local position, the apparatus is not reserved or not manual selected for apparatus 1
BExx-	AU_OP_V2	OUT	Automatic operation permitted, i.e. the operator place selector is not in Local position, the apparatus is not reserved or not manual selected for apparatus 2
BExx-	AU_OP_V3	OUT	Automatic operation permitted, i.e. the operator place selector is not in Local position, the apparatus is not reserved or not manual selected for apparatus 3
BExx-	AU_OP_V4	OUT	Automatic operation permitted, i.e. the operator place selector is not in Local position, the apparatus is not reserved or not manual selected for apparatus 4
BExx-	AU_OP_V5	OUT	Automatic operation permitted, i.e. the operator place selector is not in Local position, the apparatus is not reserved or not manual selected for apparatus 5
BExx-	AU_OP_V6	OUT	Automatic operation permitted, i.e. the operator place selector is not in Local position, the apparatus is not reserved or not manual selected for apparatus 6
BExx-	AU_OP_V7	OUT	Automatic operation permitted, i.e. the operator place selector is not in Local position, the apparatus is not reserved or not manual selected for apparatus 7
BExx-	AU_OP_V8	OUT	Automatic operation permitted, i.e. the operator place selector is not in Local position, the apparatus is not reserved or not manual selected for apparatus 8
BExx-	BINPERR	OUT	Indication for binary input board error

Table 5: Signal list for BAYCONE (Continued)

Block	Signal	Type	Description
BExx-	BOUTERR	OUT	Indication for binary output board error
BExx-	BRLYERR	OUT	Indication for external relay error
BExx-	FDB_SEL1	OUT	Correct selection relay is energised for apparatus 1
BExx-	FDB_SEL2	OUT	Correct selection relay is energized for apparatus 2
BExx-	FDB_SEL3	OUT	Correct selection relay is energized for apparatus 3
BExx-	FDB_SEL4	OUT	Correct selection relay is energized for apparatus 4
BExx-	FDB_SEL5	OUT	Correct selection relay is energized for apparatus 5
BExx-	FDB_SEL6	OUT	Correct selection relay is energized for apparatus 6
BExx-	FDB_SEL7	OUT	Correct selection relay is energized for apparatus 7
BExx-	FDB_SEL8	OUT	Correct selection relay is energized for apparatus 8
BExx-	LOCAL	OUT	Indication of Local operator place
BExx-	RE	OUT	A reservation has been made in this bay
BExx-	RE_BAYS	OUT	Request for reservation of other bays
BExx-	REMOTE	OUT	Indication of Remote operator place
BExx-	SEL1	OUT	Apparatus 1 is selected after reservation acknowledgement from other bays
BExx-	SEL2	OUT	Apparatus 2 is selected after reservation acknowledgement from other bays
BExx-	SEL3	OUT	Apparatus 3 is selected after reservation acknowledgement from other bays
BExx-	SEL4	OUT	Apparatus 4 is selected after reservation acknowledgement from other bays
BExx-	SEL5	OUT	Apparatus 5 is selected after reservation acknowledgement from other bays
BExx-	SEL6	OUT	Apparatus 6 is selected after reservation acknowledgement from other bays
BExx-	SEL7	OUT	Apparatus 7 is selected after reservation acknowledgement from other bays
BExx-	SEL8	OUT	Apparatus 8 is selected after reservation acknowledgement from other bays
BExx-	STATION	OUT	Indication of Station operator place
BExx	T_CAN_RE		See setting table for BAxx thru BFxx

Table 6: Signal list for BAYCONF

Block	Signal	Type	Description
BFxx-	ACK_F_B	IN	Input for acknowledging the reservation of other bays
BFxx-	ANY_ACK	IN	Input indicating that at least one acknowledge is still active
BFxx-	BLK_RE	IN	Input for blocking all reservations
BFxx-	EX_DA_UP	IN	Input is 1 if the program that acknowledged the reservation is running
BFxx-	EXCH_IN	IN	Input for information exchange with other BAYCONs in bays with more than 8 apparatuses
BFxx-	INPBOERR	IN	Input for binary input board error
BFxx-	L_L	IN	Input to change operator place to Local
BFxx-	OUTBOERR	IN	Input for binary output board error
BFxx-	OVERRIDE	IN	Input for overriding the reservation function including the blocking by BLK_RE

Table 6: Signal list for BAYCONF (Continued)

Block	Signal	Type	Description
BFxx-	RE_B1	IN	Reservation of the own bay only (i.e. not other bays) at selection from apparatus 1
BFxx-	RE_B2	IN	Reservation of the own bay only (i.e. not other bays) at selection from apparatus 2
BFxx-	RE_B3	IN	Reservation of the own bay only (i.e. not other bays) at selection from apparatus 3
BFxx-	RE_B4	IN	Reservation of the own bay only (i.e. not other bays) at selection from apparatus 4
BFxx-	RE_B5	IN	Reservation of the own bay only (i.e. not other bays) at selection from apparatus 5
BFxx-	RE_B6	IN	Reservation of the own bay only (i.e. not other bays) at selection from apparatus 6
BFxx-	RE_B7	IN	Reservation of the own bay only (i.e. not other bays) at selection from apparatus 7
BFxx-	RE_B8	IN	Reservation of the own bay only (i.e. not other bays) at selection from apparatus 8
BFxx-	RE_RQ_B	IN	Request for reservation from other bays
BFxx-	RQ_SEL1	IN	Request for selection and reservation of apparatus 1
BFxx-	RQ_SEL2	IN	Request for selection and reservation of apparatus 2
BFxx-	RQ_SEL3	IN	Request for selection and reservation of apparatus 3
BFxx-	RQ_SEL4	IN	Request for selection and reservation of apparatus 4
BFxx-	RQ_SEL5	IN	Request for selection and reservation of apparatus 5
BFxx-	RQ_SEL6	IN	Request for selection and reservation of apparatus 6
BFxx-	RQ_SEL7	IN	Request for selection and reservation of apparatus 7
BFxx-	RQ_SEL8	IN	Request for selection and reservation of apparatus 8
BFxx-	S_R	IN	Input to change operator place to Remote (pulse input)
BFxx-	S_S	IN	Input to change operator place to Station (pulse input)
BFxx-	SEL_ACT1	IN	Selection of apparatus 1 is activated by the program and the selection relay should be energised
BFxx-	SEL_ACT2	IN	Selection of apparatus 2 is activated by the program and the selection relay should be energised
BFxx-	SEL_ACT3	IN	Selection of apparatus 3 is activated by the program and the selection relay should be energised
BFxx-	SEL_ACT4	IN	Selection of apparatus 4 is activated by the program and the selection relay should be energised
BFxx-	SEL_ACT5	IN	Selection of apparatus 5 is activated by the program and the selection relay should be energised
BFxx-	SEL_ACT6	IN	Selection of apparatus 6 is activated by the program and the selection relay should be energised
BFxx-	SEL_ACT7	IN	Selection of apparatus 7 is activated by the program and the selection relay should be energised
BFxx-	SEL_ACT8	IN	Selection of apparatus 8 is activated by the program and the selection relay should be energised
BFxx-	SEL_CH1	IN	Indication that no selection or execution relay is energised
BFxx-	SEL_CH2	IN	Indication that at least one selection or execution relay is energised

Table 6: Signal list for BAYCONF (Continued)

Block	Signal	Type	Description
BFxx-	SEL_FDB1	IN	Input for individual selection relay energising of apparatus 1
BFxx-	SEL_FDB2	IN	Input for individual selection relay energising of apparatus 2
BFxx-	SEL_FDB3	IN	Input for individual selection relay energising of apparatus 3
BFxx-	SEL_FDB4	IN	Input for individual selection relay energising of apparatus 4
BFxx-	SEL_FDB5	IN	Input for individual selection relay energising of apparatus 5
BFxx-	SEL_FDB6	IN	Input for individual selection relay energising of apparatus 6
BFxx-	SEL_FDB7	IN	Input for individual selection relay energising of apparatus 7
BFxx-	SEL_FDB8	IN	Input for individual selection relay energising of apparatus 8
BFxx-	V_RE_RQ	IN	Input is 1 for valid request of reservation from any bay
BFxx-	V_TX	IN	Indication for valid transmission of the reservation signals
BFxx-	ACK_T_B	OUT	Acknowledgement to other bays that this bay is reserved
BFxx-	AU_OP_V1	OUT	Automatic operation permitted, i.e. the operator place selector is not in Local position, the apparatus is not reserved or not manual selected for apparatus 1
BFxx-	AU_OP_V2	OUT	Automatic operation permitted, i.e. the operator place selector is not in Local position, the apparatus is not reserved or not manual selected for apparatus 2
BFxx-	AU_OP_V3	OUT	Automatic operation permitted, i.e. the operator place selector is not in Local position, the apparatus is not reserved or not manual selected for apparatus 3
BFxx-	AU_OP_V4	OUT	Automatic operation permitted, i.e. the operator place selector is not in Local position, the apparatus is not reserved or not manual selected for apparatus 4
BFxx-	AU_OP_V5	OUT	Automatic operation permitted, i.e. the operator place selector is not in Local position, the apparatus is not reserved or not manual selected for apparatus 5
BFxx-	AU_OP_V6	OUT	Automatic operation permitted, i.e. the operator place selector is not in Local position, the apparatus is not reserved or not manual selected for apparatus 6
BFxx-	AU_OP_V7	OUT	Automatic operation permitted, i.e. the operator place selector is not in Local position, the apparatus is not reserved or not manual selected for apparatus 7
BFxx-	AU_OP_V8	OUT	Automatic operation permitted, i.e. the operator place selector is not in Local position, the apparatus is not reserved or not manual selected for apparatus 8
BFxx-	BINPERR	OUT	Indication for binary input board error
BFxx-	BOUTERR	OUT	Indication for binary output board error
BFxx-	BRLYERR	OUT	Indication for external relay error
BFxx-	EXCH_OUT	OUT	Output for information exchange with other BAYCONs in bays with more than 8 apparatuses
BFxx-	FDB_SEL1	OUT	Correct selection relay is energised for apparatus 1
BFxx-	FDB_SEL2	OUT	Correct selection relay is energized for apparatus 2
BFxx-	FDB_SEL3	OUT	Correct selection relay is energized for apparatus 3
BFxx-	FDB_SEL4	OUT	Correct selection relay is energized for apparatus 4
BFxx-	FDB_SEL5	OUT	Correct selection relay is energized for apparatus 5

Table 6: Signal list for BAYCONF (Continued)

Block	Signal	Type	Description
BFxx-	FDB_SEL6	OUT	Correct selection relay is energized for apparatus 6
BFxx-	FDB_SEL7	OUT	Correct selection relay is energized for apparatus 7
BFxx-	FDB_SEL8	OUT	Correct selection relay is energized for apparatus 8
BFxx-	LOCAL	OUT	Indication of Local operator place
BFxx-	RE	OUT	A reservation has been made in this bay
BFxx-	RE_BAYS	OUT	Request for reservation of other bays
BFxx-	REMOTE	OUT	Indication of Remote operator place
BFxx-	SEL1	OUT	Apparatus 1 is selected after reservation acknowledgement from other bays
BFxx-	SEL2	OUT	Apparatus 2 is selected after reservation acknowledgement from other bays
BFxx-	SEL3	OUT	Apparatus 3 is selected after reservation acknowledgement from other bays
BFxx-	SEL4	OUT	Apparatus 4 is selected after reservation acknowledgement from other bays
BFxx-	SEL5	OUT	Apparatus 5 is selected after reservation acknowledgement from other bays
BFxx-	SEL6	OUT	Apparatus 6 is selected after reservation acknowledgement from other bays
BFxx-	SEL7	OUT	Apparatus 7 is selected after reservation acknowledgement from other bays
BFxx-	SEL8	OUT	Apparatus 8 is selected after reservation acknowledgement from other bays
BFxx-	STATION	OUT	Indication of Station operator place
BFxx	T_CAN_RE		See setting table for BAxx thru BFxx

Table 7: Signal table for COMCON

Block	Signal	Type	Description
COxx-	AU_CANC	IN	Input for cancelling an operation from an automatic function (pulse input)
COxx-	AU_CLOSE	IN	Execute command for closing the apparatus from an automatic function (pulse input)
COxx-	AU_OPEN	IN	Execute command for opening the apparatus from an automatic function (pulse input)
COxx-	AU_SEL_C	IN	Selection for closing the apparatus from an automatic function (pulse input)
COxx-	AU_SEL_O	IN	Selection for opening the apparatus from an automatic function (pulse input)
COxx-	L_CLOSE	IN	Execute command for closing the apparatus from Local
COxx-	L_IR_OVR	IN	Input for overriding selection and reservation from Local
COxx-	L_OPEN	IN	Execute command for opening the apparatus from Local
COxx-	L_SEL_C	IN	Selection for closing the apparatus from Local
COxx-	L_SEL_O	IN	Selection for opening the apparatus from Local
COxx-	LOCAL	IN	Input for indicating Local as valid operator place
COxx-	R_CANCEL	IN	Input for cancelling an operation from Remote (pulse input)
COxx-	R_CLOSE	IN	Execute command for closing the apparatus from Remote (pulse input)
COxx-	R_OPEN	IN	Execute command for opening the apparatus from Remote (pulse input)
COxx-	R_SEL_C	IN	Selection for closing the apparatus from Remote (pulse input)
COxx-	R_SEL_O	IN	Selection for opening the apparatus from Remote (pulse input)
COxx-	REMOTE	IN	Input for indicating Remote as valid operator place

Table 7: Signal table for COMCON (Continued)

Block	Signal	Type	Description
COxx-	S_BL_UPD	IN	Input for blocking process updating from Station (pulse input)
COxx-	S_BLK_OP	IN	Input for blocking operation from Station (pulse input)
COxx-	S_CANCEL	IN	Input for cancelling an operation from Station (pulse input)
COxx-	S_CLOSE	IN	Execute command for closing the apparatus from Station (pulse input)
COxx-	S_DBL_OP	IN	Input for deblocking operation from Station (pulse input)
COxx-	S_IR_OVR	IN	Input for overriding selection and reservation from Station (pulse input)
COxx-	S_MA_U_C	IN	Input for manual entry of close position from Station (pulse input)
COxx-	S_MA_U_O	IN	Input for manual entry of open position from Station (pulse input)
COxx-	S_OPEN	IN	Execute command for opening the apparatus from Station (pulse input)
COxx-	S_PR_UPD	IN	Input for resuming process updating from Station (pulse input)
COxx-	S_SEL_C	IN	Selection for closing the apparatus from Station (pulse input)
COxx-	S_SEL_O	IN	Selection for opening the apparatus from Station (pulse input)
COxx-	SEL_RES	IN	Input for reset of selection after operation
COxx-	SEL_SEQ	IN	A sequence program is performing an operation
COxx-	SELECT	IN	Input stating that a correct selection and reservation is made in the bay
COxx-	STATION	IN	Input for indicating Station as valid operator place
COxx-	AU_MODE	OUT	HMI indication that an automatic function is performing an operation i.e. input AU_SEL_O/C is set
COxx-	BLK_OP	OUT	Output signal for blocking the operation (pulse output)
COxx-	BLK_UPD	OUT	Output signal for blocking the process updating (pulse output)
COxx-	CANCEL	OUT	Output signal to cancel any operation before an execute command
COxx-	CLOSE	OUT	Close direction output
COxx-	DBL_OP	OUT	Output signal for deblocking the operation (pulse output)
COxx-	EXECUTE	OUT	Output signal to execute the operation
COxx-	L_OP	OUT	HMI indication stating that Local is valid operator place
COxx-	LO_OP_T	OUT	Indication of a long operation time
COxx-	MA_UPD_C	OUT	Output signal for manual setting of close position, when the updating is blocked (pulse output)
COxx-	MA_UPD_O	OUT	Output signal for manual setting of open position, when the updating is blocked (pulse output)
COxx-	OPEN	OUT	Open direction output
COxx-	OVERRIDE	OUT	Output signal to override an interlocking and reservation
COxx-	PROC_UPD	OUT	Output signal for resuming the process updating (pulse output)
COxx-	R_OP	OUT	HMI indication stating that Remote is valid operator place
COxx-	RES_ERR	OUT	Indication of a failure in the reservation
COxx-	RQ_SEL	OUT	Request selection output
COxx-	S_OP	OUT	HMI indication stating that Station is valid operator place
COxx-	SEQ_STA	OUT	Indicate that the apparatus is reserved by the input SEL_SEQ and is not in Local position
COxx-	T_LO_OP		See setting table
COxx-	T_RES		See setting table

Table 8: Signal list for SWICONA

Block	Signal	Type	Description
SAxx-	AR_SEL	IN	Selection input for fast autoreclosing. It is used only with external selection relays
SAxx-	AU_OP_V	IN	Automatic operation permitted (signal from BAYCON)
SAxx-	BLK_CLOS	IN	Blocking input for close direction
SAxx-	BLK_OPEN	IN	Blocking input for open direction
SAxx-	BLK_UPD	IN	Blocking of updating of the position indication (pulse input from COMCON)
SAxx-	CANCEL	IN	Cancelling of the selected operation (pulse input from COMCON)
SAxx-	CLOSE	IN	Close direction for operation (pulse input from COMCON)
SAxx-	EXECUTE	IN	Execution of operation (pulse input from COMCON)
SAxx-	FDB_SEL	IN	Feedback selection input
SAxx-	INT_LOCK	IN	Operation blocked by conditions from the interlocking module
SAxx-	MA_UPD_C	IN	Input for manual setting of close position (pulse input from COMCON)
SAxx-	MA_UPD_O	IN	Input for manual setting of open position (pulse input from COMCON)
SAxx-	OPEN	IN	Open direction for operation (pulse input from COMCON)
SAxx-	POS_L1_C	IN	Input for closed position indication in phase L1
SAxx-	POS_L1_O	IN	Input for open position indication in phase L1
SAxx-	POS_L2_C	IN	Input for closed position indication in phase L2
SAxx-	POS_L2_O	IN	Input for open position indication in phase L2
SAxx-	POS_L3_C	IN	Input for closed position indication in phase L3
SAxx-	POS_L3_O	IN	Input for open position indication in phase L3
SAxx-	POSIND_V	IN	Input for external position check function, i.e. valid position of the apparatus
SAxx-	PROC_UPD	IN	Resuming of updating of the position indication (pulse input from COMCON)
SAxx-	SELECT	IN	Selection input (from BAYCON, signal SELx)
SAxx-	SY_FAIL	IN	To be set to true when the synchro-check/phasing fails and the command execution will stop
SAxx-	SY_OK	IN	Closing will be permitted at set to true by the synchro-check and when SY_RUN is true
SAxx-	SY_RUN	IN	To be set to true when the synchro-check is running
SAxx-	UPD_BLK	IN	Input for blocking of updating (from BLKCONK at blocking of all apparatuses in a bay)
SAxx-	AU_OP_P	OUT	Automatic operation is permitted, i.e. the operator place selector is not in Local position, the apparatus is not reserved, not manual selected or not blocked (neither operation nor update of position). The interlocking conditions are not considered
SAxx-	BLK_AR	OUT	Output is activated when reservation is made. It is used to block autoreclosing when an operation is in progress
SAxx-	CMD_ERR	OUT	Output indicating a command error. That is done if the position indication of the executed apparatus does not indicate a start in the position change before the time T_START has elapsed
SAxx-	CX	OUT	Indication that the apparatus is in close position. Result of the three single phase indications or blocking of the process updating or by the manually entered close position

Table 8: Signal list for SWICONA (Continued)

Block	Signal	Type	Description
SAxx-	EXE_CLOS	OUT	Execute output for close direction (settable pulse length)
SAxx-	EXE_OPEN	OUT	Execute output for open direction (settable pulse length)
SAxx-	MA_UPD_P	OUT	Output indicating manual control of position updating
SAxx-	OX	OUT	Indication that the apparatus is in open position. Result of the three single phase indications or blocking of the process updating or by the manually entered open position
SAxx-	POL_DISC	OUT	Output indicating pole discordance, after that the time T_POL has elapsed
SAxx-	POS_ERR	OUT	Position error. Result of that at least one of following conditions are fulfilled: One phase is both open and closed, one phase is in middle position longer than T_POSERR, the input POSIND_V is false
SAxx-	SEL_CLOS	OUT	Selection output for close direction
SAxx-	SEL_ERR	OUT	Output indicating a failure in the selection, if no feedback select signal FDB_SEL is activated before the time T_SEL has elapsed
SAxx-	SEL_OPEN	OUT	Selection output for open direction
SAxx-	SEL_RES	OUT	Reset the selection after successful or failed operation (pulse output)
SAxx-	T_POL		See setting table
SAxx-	T_POSERR		See setting table
SAxx-	T_PULSE		See setting table
SAxx-	T_SEL		See setting table
SAxx-	T_START		See setting table

Table 9: Signal list for SWICONB

Block	Signal	Type	Description
SBxx-	AR_SEL	IN	Selection input for fast autoreclosing. It is used only with external selection relays
SBxx-	AU_OP_V	IN	Automatic operation permitted (signal from BAYCON)
SBxx-	BLK_CLOS	IN	Blocking input for close direction
SBxx-	BLK_OPEN	IN	Blocking input for open direction
SBxx-	BLK_UPD	IN	Blocking of updating of the position indication (pulse input from COMCON)
SBxx-	CANCEL	IN	Cancelling of the selected operation (pulse input from COMCON)
SBxx-	CLOSE	IN	Close direction for operation (pulse input from COMCON)
SBxx-	EXECUTE	IN	Execution of operation (pulse input from COMCON)
SBxx-	FDB_SEL	IN	Feedback selection input
SBxx-	INT_LOCK	IN	Operation blocked by conditions from the interlocking module
SBxx-	MA_UPD_C	IN	Input for manual setting of close position (pulse input from COMCON)
SBxx-	MA_UPD_O	IN	Input for manual setting of open position (pulse input from COMCON)
SBxx-	OPEN	IN	Open direction for operation (pulse input from COMCON)
SBxx-	POS_L1_C	IN	Input for closed position indication in phase L1
SBxx-	POS_L1_O	IN	Input for open position indication in phase L1
SBxx-	POS_L2_C	IN	Input for closed position indication in phase L2

Table 9: Signal list for SWICONB (Continued)

Block	Signal	Type	Description
SBxx-	POS_L2_O	IN	Input for open position indication in phase L2
SBxx-	POS_L3_C	IN	Input for closed position indication in phase L3
SBxx-	POS_L3_O	IN	Input for open position indication in phase L3
SBxx-	POSIND_V	IN	Input for external position check function, i.e. valid position of the apparatus
SBxx-	PROC_UPD	IN	Resuming of updating of the position indication (pulse input from COMCON)
SBxx-	SELECT	IN	Selection input (from BAYCON, signal SELx)
SBxx-	SY_FAIL	IN	To be set to true when the synchro-check/phasing fails and the command execution will stop
SBxx-	SY_RUN	IN	Connected to the synchro-check module (equipment). At true all timers in SWICONB are stopped
SBxx-	UPD_BLK	IN	Input for blocking of updating (from BLKCONK at blocking of all apparatuses in a bay)
SBxx-	AU_OP_P	OUT	Automatic operation is permitted, i.e. the operator place selector is not in Local position, the apparatus is not reserved, not manual selected or not blocked (neither operation nor update of position). The interlocking conditions are not considered
SBxx-	BLK_AR	OUT	Output is activated when reservation is made. It is used to block autoreclosing when an operation is in progress
SBxx-	CMD_ERR	OUT	Output indicating a command error. That is done if the position indication of the executed apparatus does not indicate a start in the position change before the time T_START has elapsed
SBxx-	CX	OUT	Indication that the apparatus is in close position. Result of the three single phase indications or blocking of the process updating or by the manually entered close position
SBxx-	EXE_CLOS	OUT	Execute output for close direction (settable pulse length)
SBxx-	EXE_OPEN	OUT	Execute output for open direction (settable pulse length)
SBxx-	MA_UPD_P	OUT	Output indicating manual control of position updating
SBxx-	OX	OUT	Indication that the apparatus is in open position. Result of the three single phase indications or blocking of the process updating or by the manually entered open position
SBxx-	POL_DISC	OUT	Output indicating pole discordance, after that the time T_POL has elapsed
SBxx-	POS_ERR	OUT	Position error. Result of that at least one of following conditions are fulfilled: One phase is both open and closed, one phase is in middle position longer than T_POSERR, the input POSIND_V is false
SBxx-	SEL_CLOS	OUT	Selection output for close direction
SBxx-	SEL_ERR	OUT	Output indicating a failure in the selection, if no feedback select signal FDB_SEL is activated before the time T_SEL has elapsed
SBxx-	SEL_OPEN	OUT	Selection output for open direction
SBxx-	SEL_RES	OUT	Reset the selection after successful or failed operation (pulse output)
SBxx-	T_POL		See setting table
SBxx-	T_POSERR		See setting table
SBxx-	T_PULSE		See setting table
SBxx-	T_SEL		See setting table
SBxx-	T_START		See setting table

Table 10: Signal list for SWICONC

Block	Signal	Type	Description
SCxx-	AU_OP_V	IN	Automatic operation permitted (signal from BAYCON)
SCxx-	BLK_CLOS	IN	Blocking input for close direction
SCxx-	BLK_OPEN	IN	Blocking input for open direction
SCxx-	BLK_UPD	IN	Blocking of updating of the position indication (pulse input from COMCON)
SCxx-	CANCEL	IN	Cancelling of the selected operation (pulse input from COMCON)
SCxx-	CLOSE	IN	Close direction for operation (pulse input from COMCON)
SCxx-	EXECUTE	IN	Execution of operation (pulse input from COMCON)
SCxx-	FDB_SEL	IN	Feedback selection input
SCxx-	INT_LOCK	IN	Operation blocked by conditions from the interlocking module
SCxx-	MA_UPD_C	IN	Input for manual setting of close position (pulse input from COMCON)
SCxx-	MA_UPD_O	IN	Input for manual setting of open position (pulse input from COMCON)
SCxx-	OPEN	IN	Open direction for operation (pulse input from COMCON)
SCxx-	POS_C	IN	Input for close position indication
SCxx-	POS_O	IN	Input for open position indication
SCxx-	POSIND_V	IN	Input for external position check function, i.e. valid position of the apparatus
SCxx-	PROC_UPD	IN	Resuming of updating of the position indication (pulse input from COMCON)
SCxx-	SELECT	IN	Selection input (from BAYCON, signal SELx)
SCxx-	UPD_BLK	IN	Input for blocking of updating (from BLKCONK at blocking of all apparatuses in a bay)
SCxx-	AU_OP_P	OUT	Automatic operation is permitted, i.e. the operator place selector is not in Local position, the apparatus is not reserved, not manual selected or not blocked (neither operation nor update of position). The interlocking conditions are not considered
SCxx-	CMD_ERR	OUT	Output indicating a command error. That is done if the position indication of the executed apparatus does not indicate a start in the position change before the time T_START has elapsed
SCxx-	CX	OUT	Indication that the apparatus is in close position. Result of the input indication or blocking of the process updating or by the manually entered close position
SCxx-	EXE_CLOS	OUT	Execute output for close direction (settable pulse length)
SCxx-	EXE_OPEN	OUT	Execute output for open direction (settable pulse length)
SCxx-	MA_UPD_P	OUT	Output indicating manual control of position updating
SCxx-	OX	OUT	Indication that the apparatus is in open position. Result of the input indication or blocking of the process updating or by the manually entered open position
SCxx-	POS_ERR	OUT	Position error, i.e. the position indication is both open and closed or is in middle position longer than T_POSERR or the input POSIND_V is false
SCxx-	SEL_CLOS	OUT	Selection output for close direction
SCxx-	SEL_ERR	OUT	Output indicating a failure in the selection, if no feedback select signal FDB_SEL is activated before the time T_SEL has elapsed
SCxx-	SEL_OPEN	OUT	Selection output for open direction
SCxx-	SEL_RES	OUT	Reset the selection after successful or failed operation (pulse output)

Table 10: Signal list for SWICONC (Continued)

Block	Signal	Type	Description
SCxx-	T_POSERR		See setting table
SCxx-	T_PULSE		See setting table
SCxx-	T_SEL		See setting table
SCxx-	T_START		See setting table

Table 11: Signal list for BLKCONK

Block	Signal	Type	Description
BKxx-	BLK_1_1	IN	First blocking input for the first blocking function
BKxx-	BLK_1_2	IN	Second blocking input for the first blocking function
BKxx-	BLK_1_3	IN	Third blocking input for the first blocking function
BKxx-	BLK_2_1	IN	First blocking input for the second blocking function
BKxx-	BLK_2_2	IN	Second blocking input for the second blocking function
BKxx-	BLK_2_3	IN	Third blocking input for the second blocking function
BKxx-	BLK_3_1	IN	First blocking input for the third blocking function
BKxx-	BLK_3_2	IN	Second blocking input for the third blocking function
BKxx-	BLK_3_3	IN	Third blocking input for the third blocking function
BKxx-	BLKCMD1	IN	Setting of the first blocking function (pulse input)
BKxx-	BLKCMD2	IN	Setting of the second blocking function (pulse input)
BKxx-	BLKCMD3	IN	Setting of the third blocking function (pulse input)
BKxx-	BYPASS1	IN	Bypass input for the blocking inputs i.e. sets the first output to 0 (false) if activated
BKxx-	BYPASS2	IN	Bypass input for the blocking inputs i.e. sets the second output to 0 (false) if activated
BKxx-	BYPASS3	IN	Bypass input for the blocking inputs i.e. sets the third output to 0 (false) if activated
BKxx-	DBLCMD1	IN	Resetting of the first blocking function (pulse input)
BKxx-	DBLCMD2	IN	Resetting of the second blocking function (pulse input)
BKxx-	DBLCMD3	IN	Resetting of the third blocking function (pulse input)
BKxx-	BLK_OUT1	OUT	Blocking output for the first blocking function
BKxx-	BLK_OUT2	OUT	Blocking output for the second blocking function
BKxx-	BLK_OUT3	OUT	Blocking output for the third blocking function

Table 12: Signal list for BLKCONL

Block	Signal	Type	Description
BLxx-	BLK_1_1	IN	First blocking input for the blocking function
BLxx-	BLK_1_2	IN	Second blocking input for the blocking function
BLxx-	BLK_1_3	IN	Third blocking input for the blocking function
BLxx-	BLKCMD1	IN	Setting of the blocking function (pulse input)
BLxx-	BYPASS1	IN	Bypass input for the blocking inputs i.e. sets the output to 0 (false) if activated
BLxx-	DBLCMD1	IN	Resetting of the blocking function (pulse input)
BLxx-	BLK_OUT1	OUT	Blocking output for the blocking function

7.3 Setting tables

Table 13: Setting table for BAYCONA thru BAYCONF

Parameter	Range	Unit	Default	Parameter description
T_CAN_RE	0.000-200.000	s	0.000	Time-out when the reset of the reservation acknowledgement is not done by the requesting bays, for example, because of communication error. Can only be set from CAP 531 configuration tool

Table 14: Setting table for COMCON

Parameter	Range	Unit	Default	Parameter description
T_LO_OP	0.000-200.000	s	0.000	Maximum time between a select and the execute command coming from the operator. Also the maximum time between the request to override and the following select. Can only be set from the CAP 531 configuration tool
T_RES	0.000-200.000	s	0.000	Allowed time (for BAYCON) to make the reservation. Can only be set from the CAP 531 configuration tool

Table 15: Setting table for SWICONA

Parameter	Range	Unit	Default	Parameter description
T_POL	0.000-200.000	s	0.000	Time parameter for pole discordance. Allowed time to have discrepancy between the poles. Can only be set from CAP 531 configuration tool
T_POSERR	0.000-200.000	s	0.000	Allowed time for middle position. Can only be set from CAP 531 configuration tool
T_PULSE	0.000-200.000	s	0.000	Time parameter for command output pulse length. T_PULSE = 0 gives a steady command output signal. Can only be set from CAP 531 configuration tool
T_SEL	0.000-200.000	s	0.000	Allowed time from selection to feedback select. Can only be set from CAP 531 configuration tool

Table 15: Setting table for SWICONA (Continued)

Parameter	Range	Unit	Default	Parameter description
T_START	0.000-200.000	s	0.000	Allowed time from execute to position indication change. Can only be set from CAP 531 configuration tool

Table 16: Setting table for SWICONB

Parameter	Range	Unit	Default	Parameter description
T_POL	0.000-200.000	s	0.000	Time parameter for pole discordance. Allowed time to have discrepancy between the poles. Can only be set from CAP 531 configuration tool
T_POSERR	0.000-200.000	s	0.000	Allowed time for middle position. Can only be set from CAP 531 configuration tool
T_PULSE	0.000-200.000	s	0.000	Time parameter for command output pulse length. T_PULSE = 0 gives a steady command output signal. Can only be set from CAP 531 configuration tool
T_SEL	0.000-200.000	s	0.000	Allowed time from selection to feedback select. Can only be set from CAP 531 configuration tool
T_START	0.000-200.000	s	0.000	Allowed time from execute to position indication change. Can only be set from CAP 531 configuration tool

Table 17: Settings for SWICONC

Parameter	Range	Unit	Default	Parameter description
T_POSERR	0.000-200.000	s	0.000	Allowed time for middle position. Can only be set from CAP 531 configuration tool
T_PULSE	0.000-200.000	s	0.000	Time parameter for command output pulse length. T_PULSE = 0 gives a steady command output signal. Can only be set from CAP 531 configuration tool
T_SEL	0.000-200.000	s	0.000	Allowed time from selection to feedback select. Can only be set from CAP 531 configuration tool
T_START	0.000-200.000	s	0.000	Allowed time from execute to position indication change. Can only be set from CAP 531 configuration tool

1 Introduction

The interlocking of switchgear operation can have two main purposes to:

- Avoid dangerous or damaging operation of switchgear
- Put restrictions on the configuration of the substation or total switchgear for operational reasons. Examples of the latter are to limit the number of parallel transformers to a maximum of two or to assure that energising is always made from one side, for example, the high voltage side of a transformer.

This interlocking document only deals with the first point, and only with restrictions caused by switching devices other than that one to be controlled. This means that switch interlock, because of device alarms, is not part of this document.

Disconnectors and earthing switches have a limited switching capacity. Disconnectors are allowed to operate:

- With basically zero current. The circuit is open at one side and has a small extension. The capacitive current is small (for example < 5A) and power transformers with inrush current are not allowed. Capacitive and magnetic voltage transformers (VT) are allowed.
- To connect or disconnect a parallel circuit carrying load current. The switching voltage across the open contacts is thus virtually zero, thanks to the parallel circuit (for example < 1% of rated voltage). Paralleling of power transformers is not allowed.

Earthing switches are allowed to connect and disconnect earthing of isolated points. Due to capacitive or inductive coupling there may be some voltage (for example < 40% of rated voltage) before earthing and some current (for example < 100A) after earthing of a line.

Circuit breakers are usually not interlocked to prevent damage. Closing is only interlocked against running disconnectors in the same bay, and the bus-coupler opening is interlocked during a busbar transfer.

As conditions for operational interlocking, the positions of all switching devices of a bay and from some other bays are used. Conditions from other stations are usually not available. So a line earthing switch is usually not fully interlocked. The operator must be convinced that the line is not energised from the other side before closing the earthing switch. As an option, a voltage indication can be used for interlocking. Take care to avoid a dangerous *enable* condition at loss of VT secondary voltage, for example, because of a blown fuse.

The switch positions used in the operational interlocking logic are obtained from auxiliary contacts. For each position an indication is needed - thus forming a double indication. The apparatus control function continuously checks its consistency. If neither condition is high (1 or TRUE), the switch may be in intermediate position, for example, moving. This moving state may last a certain time, for example, 10 seconds for disconnectors. Should both indications stay low for a longer time, the state is

interpreted as *unknown* (it may be in an intermediate position, or there may be a control system error, such as bad contact). If both indications stay high, then there is something wrong, and the state is again treated as *unknown*. In both cases an alarm is given to the operator. In the interlocking logic, the signals are used to avoid dangerous *enable* or *release* of operation conditions. Unknown positions are not allowed to release operation.

For switches with individual operation gear per phase, the evaluation must consider possible phase discrepancies. This is done by *ANDing* all three phases of open and close state. This leads to an unknown state double indication in case of phase discrepancies.

Because circuit breaker closing is usually not interlocked take care to avoid energising onto earthed parts by CB closing. So the open disconnectors rather than open CB are used to release the earthing switch (ES) closing.

2 Application

The interlocking function consists of software modules located in each control terminal. The function is distributed and not dependent on any central function. Communication between modules in different bays is performed via the station bus.

The basic method is the use of the reservation function (see the section of apparatus control). This method ensures that the position of the HV apparatuses are not changed during the time gap, which arises between the position updatings. This can occur by reserving all of those HV apparatuses by means of the communication system, which might influence the interlocking condition of the intended operation. The reservation is intended to remain until the operation is performed.

After the selection and reservation of an apparatus, the function has full information on all positions of the apparatuses in the switchyard that are affected by the selection. This status cannot be affected by other operators because the selection is blocked for all apparatuses of which the status is important for the selected one.

The positions of the HV apparatuses are inputs to software modules distributed in the control terminals. Each module contains the interlocking logic for a bay. The interlocking logic in a module is different, depending on the bay function and the switchyard arrangements, that is, double-breaker or 1 1/2 breaker bays have different modules. Specific interlocking conditions and connections between standard interlocking modules are performed by an engineering tool. The signals involved in the bay-level interlocking can consist of these types:

- Positions of HV apparatuses (sometimes per phase)
- Valid positions (if evaluated in the control module)
- External release (to add special conditions for release)
- Line voltage (to block operation of line earthing switch)
- Output signals to release the HV apparatus

The interlocking module is connected to the surrounding functions within a bay as shown in Figure 1:.

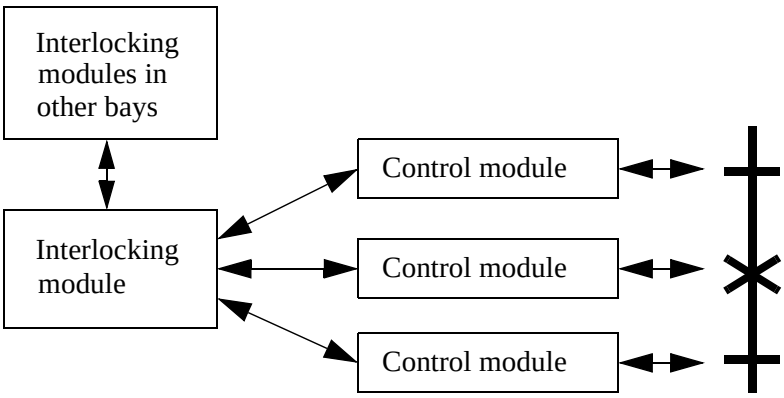

Figure 1: Interlocking module on bay level

The communication between different bays is performed via the station bus and can consist of signals of these types:

- Unearthed busbars
- The busbars are connected together
- Other bays connected to a busbar
- Received data from other bays are valid

Figure 2: shows the principle of data exchange.

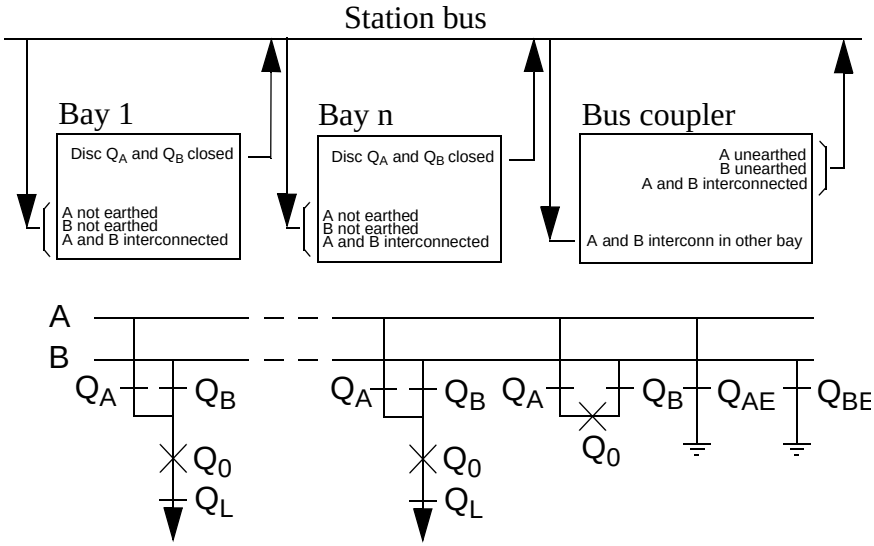

Figure 2: Data exchange between interlocking modules

The interlocking function in a bay that uses invalid data as conditions does not give a release for command. Invalid data of positions of HV apparatuses can be obtained, for example, at intermediate positions, loss of a control terminal, or at input board error.

On the station HMI an override function exists, which can be used to bypass the interlocking function if not all available data for the condition are valid.

For all interlocking modules these general rules apply:

- The interlocking conditions for opening or closing of disconnectors and earthing switches are always identical.
- Earthing switches, which can earth an incoming line directly or via circuit breakers (rapid earthing switches), are interlocked only with reference to the conditions in the associated station, not with reference to the state of the line. So a line voltage indication is included into line interlocking modules. If there is no line voltage supervision within the bay, then the appropriate inputs must be set to *no voltage,* and the operator must take care about this manually.
- Earthing switches near a circuit breaker (CB) can only be operated if disconnectors on both sides of the CB are open. Otherwise, earthing switches can only be operated on isolated points (that is, no other switch is connected).
- Disconnectors cannot break power current or connect different voltage systems. Disconnectors in series with a circuit breaker can only be operated if the circuit breaker is open, or if the disconnectors close a loop (uninterrupted bus bar transfer), or if they are completely earthed on both sides of the circuit breaker. Other disconnectors can be operated if one side is completely isolated, or if they close a loop, or if they are earthed on both sides.
- Circuit breaker closing is only interlocked against running disconnectors in its bay or additionally in a transformer bay against the disconnectors and earthing switch on the other side of the transformer, if there is no disconnector between CB and transformer.
- Circuit breaker opening is only interlocked at a bus-coupler bay, if a bus bar transfer is in progress.

3 Design

3.1 General

The implementation of the interlocking is decentralised to each bay. There are different interlocking modules dependent on the topology kind of the substation (breaker and a half or various bus bar arrangements) and the bay types. The interlocking logic for each module is specified in boolean algebra for the switch states. To keep their amount easy to handle, only operating sequences in normal service are permitted. For other uncommon operations, the command handling has an interlock override feature.

3.2 Standard modules

To make the implementation of the interlocking function easy, several standard modules are available. The modules also have inputs that can be used for delivery-specific interlocking conditions. The switchyard arrangements are described below, to which the standard modules can be used. The appendix describes input and output details.

In REC 561, these standard modules are available:

Alternative for one bay:

- A1A2_DC and
- 3 BB_ES

and either

- AB_TRAFO or
- ABC_LINE or
- ABC_BC or
- A1A2_BS or
- DB_BUS_A, DB_LINE, DB_BUS_B

Alternative for up to three single breaker bays, two double breakers bays, or one 1½ breaker diameter:

- 2 A1A2_DC and
- 6 BB_ES and
- DB_BUS_A, DB_LINE, DB_BUS_B and
- BH_LINE_A, BH_CONN, BH_LINE_B

and either

- AB_TRAFO or
- ABC_LINE or
- ABC_BC or
- A1A2_BS or
- DB_BUS_A, DB_LINE, DB_BUS_B

and either

- AB_TRAFO or
- ABC_LINE or
- ABC_BC or
- A1A2_BS

and either

- AB_TRAFO or
- ABC_LINE or
- ABC_BC or
- A1A2_BS

Alternative for two 1½ breaker diameters:

- 2 A1A2_DC and
- 6 BB_ES

and either

- AB_TRAFO or
- ABC_LINE or
- ABC_BC or
- A1A2_BS or
- DB_BUS_A, DB_LINE, DB_BUS_B

and

- 2 BH_LINE_A, 2 BH_CONN, 2 BH_LINE_B

The selection of different alternatives is made during manufacturing. The selection of standard modules within the different alternatives of REC 561 is made by a Function Selector tool included in the CAP 531 Configuration tool.

3.2.1 Line for double and transfer busbars, ABC_LINE

ABC_LINE contains the interlocking for a line connected to a double busbar configuration and a bypass bus. This module is also used for single busbar configurations and with no bypass bus.

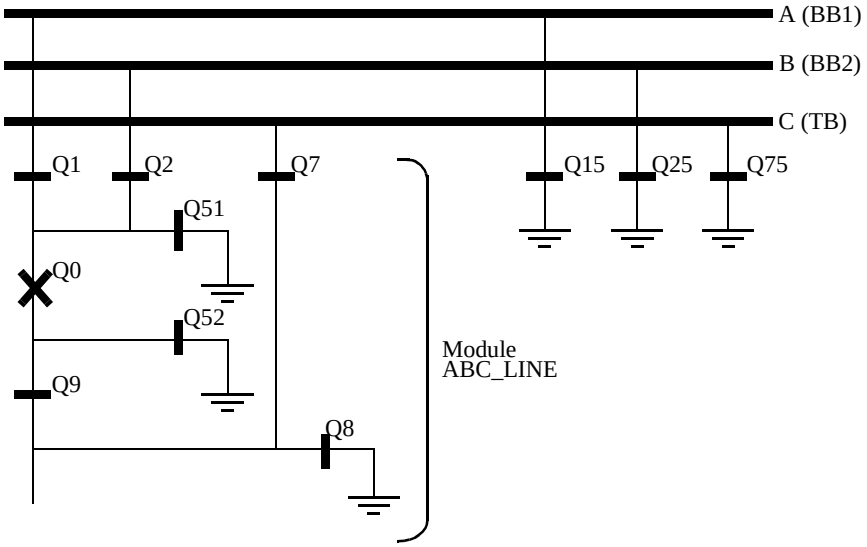

Figure 3: Switchyard layout ABC_LINE

3.2.2 Bus coupler for double and transfer busbars, ABC_BC

ABC_BC contains the interlocking for a bus-coupler bay that is connected to a double busbar configuration and a bypass bus. This module is also used for single busbar with bypass bus or double busbar without bypass busbar.

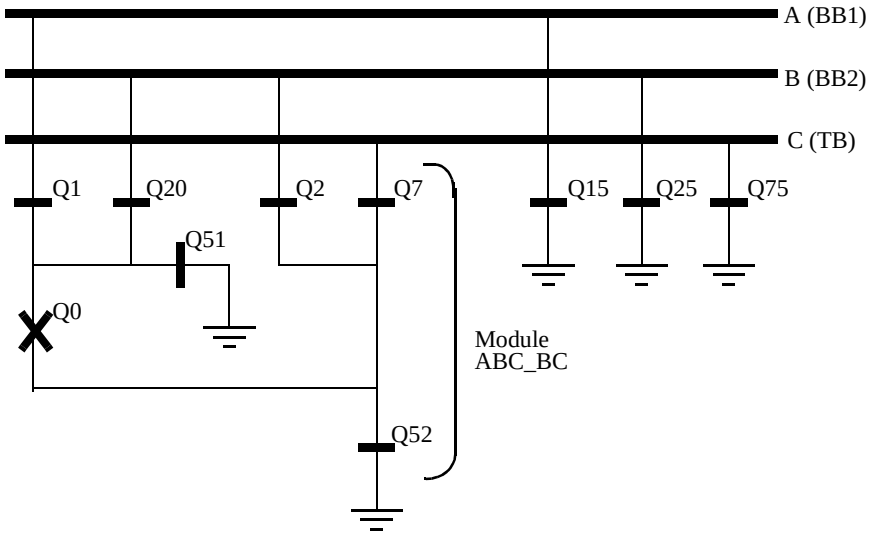

Figure 4: Switchyard layout ABC_BC

3.2.3 Transformer bay for double busbars, AB_TRAFO

AB_TRAFO contains the interlocking for a transformer bay that is connected to a double busbar configuration.This module is used if there is no disconnector between circuit breaker and transformer. Otherwise, the

module ABC_LINE can be used. For safety reasons, the module assumes that the other side of the transformer is not interlocked. This module is also used for single busbar configuration.

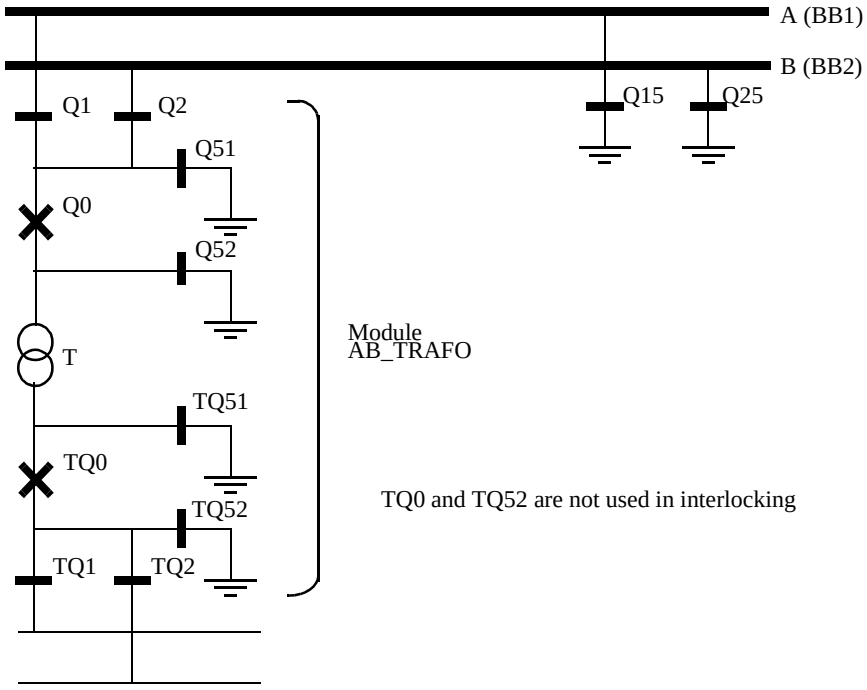

Figure 5: Switchyard layout AB_TRAFO

3.2.4 Bus-section breaker for double busbars, A1A2_BS

A1A2_BS contains the interlocking for one bus-section circuit breaker between section A1 and A2. This module is used for different busbars, which includes a bus-section circuit breaker, that is, not only busbar A.

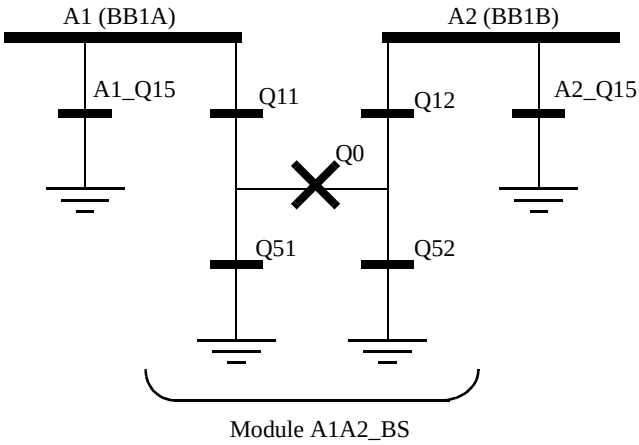

Figure 6: Switchyard layout A1A2_BS

3.2.5 Bus-section disconnector for double busbars, A1A2_DC

A1A2_DC contains the interlocking for one bus-section disconnector between section A1 and A2. This module is used for different busbars which includes a bus-section disconnector, that is, not only busbar A.

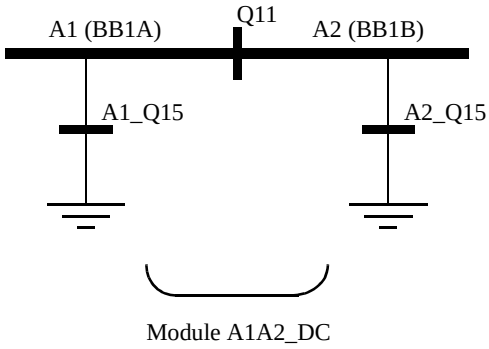

Figure 7: Switchyard layout A1A2_DC

3.2.6 Busbar earthing switch, BB_ES

BB_ES contains the interlocking for one busbar earthing switch on any busbar parts.

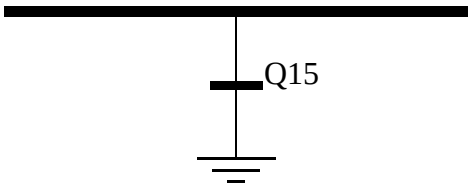

Figure 8: Switchyard layout BB_ES

3.2.7 Double CB bay, DB_BUS_A, DB_LINE, DB_BUS_B

Two types of interlocking modules per double circuit breaker bay are defined. DB_LINE is the connection from the line to the circuit breaker parts that are connected to the busbar. DB_BUS is the connection from DB_LINE to one busbar and is used for each busbar. The busbar earthing switches must also be interlocked as described in the BB_ES chapter.

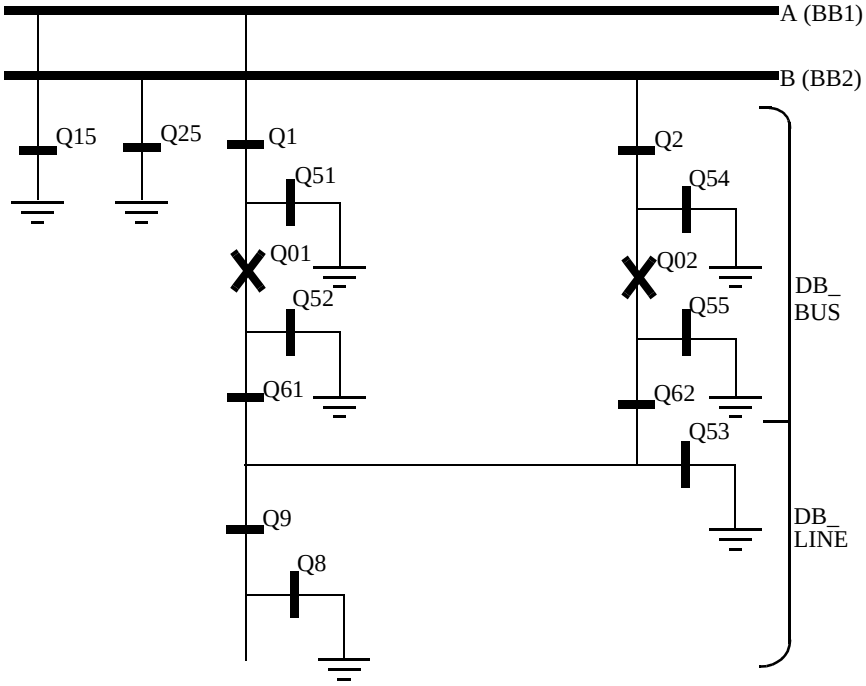

Figure 9: Switchyard layout double circuit breaker

3.2.8 1½-CB diameter, BH_LINE_A, BH_CONN, BH_LINE_B

Two types of interlocking modules per diameter are defined. BH_LINE is the connection from one line to the busbar and is used twice per diameter. BH_CONN is the connection between the two lines of a diameter. The busbar earthing switches must also be interlocked as described in the BB_ES chapter.

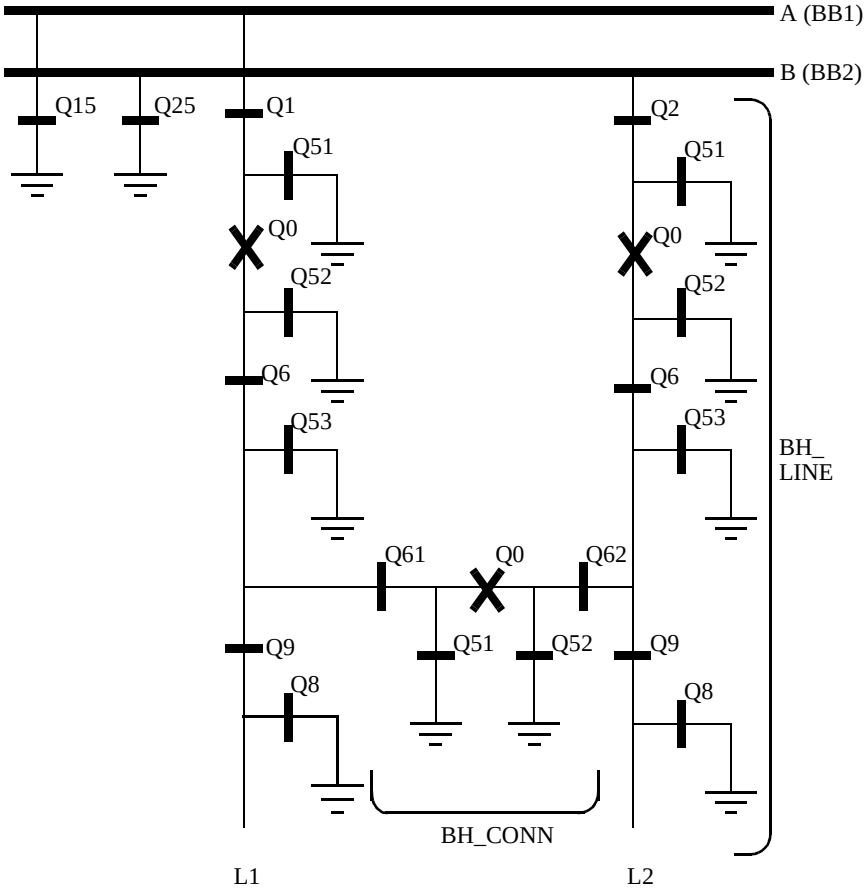

Figure 10: Switchyard layout breaker-and-a-half

3.2.9 Communication between modules

The interlocking module is implemented per bay, which needs the status indication of all switching devices of the own bay itself and some switching devices of other bays. The communication between modules in different bays is performed via the station bus. For each bay-bay communication direction, there is a need for two communication elements, one for sending and one for receiving. For sending, an Event Function block is used, and for receiving, a Multiple Command Function block is used.

The command function block supervises the transmission itself. Each communication error results in a deactivation of the data valid signal in the command function block, which is used as a condition in the interlocking logic.

The section *“Apparatus Control”*, describes how the interlocking information is exchanged between the bays and also the reservation mechanism.

4 Configurations

4.1 General

This section describes how the interlocking for a certain switchgear configuration can be realised by using standard interlocking modules and their interconnections. It also describes the parameter settings. The EXVVA_xx input signals, which are normally not used, are always set to 1=FIXD-ON. The inputs for delivery specific conditions (QxEXy) are set to 1=FIXD-ON, if they are not used except:

- Q9EX2 and Q9EX4 in modules BH_LINE_A and BH_LINE_B
- Q0EX3 in module AB_TRAFO

which are set to 0=FIXD-OFF.

4.2 Project-specific logic

4.2.1 Single breaker arrangement, line bay

The signals from other bays connected to the module ABC_LINE are described below.

4.2.1.1 Signals from bypass busbar

To derive the signals:

C_DC_OP
All line disconnectors on bypass C except in the own bay are open.

VP_C_DC
The switch status of C_DC is valid.

EXDU_BPB
Signal if no transmission error from any bay connected to a bypass busbar.

These signals from each line bay (ABC_LINE) except that of the own bay are needed:

Q7OPTR
Q7 is open

VPQ7TR
The switch status Q7 is valid.

EXDU_BPB
Signal if there is no transmission error from the bay that contains the above information. This signal is taken from the data valid output on the command function block.

For bay n, these conditions are valid:

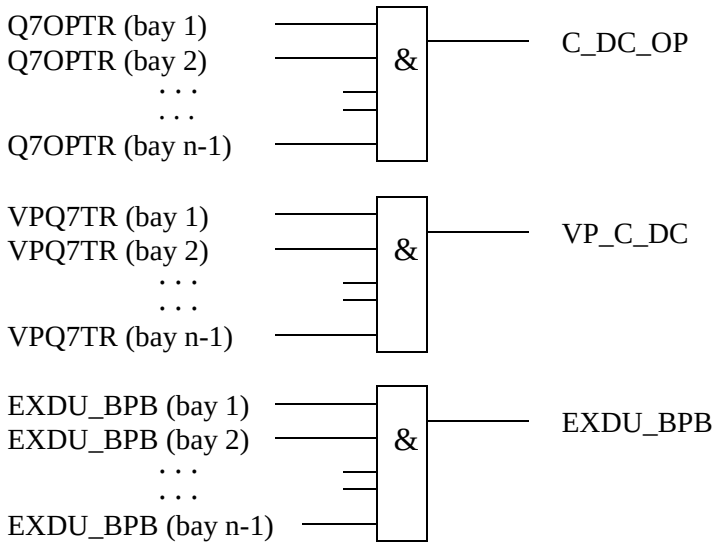

Figure 11: Signals from bypass busbar in line bay n

4.2.1.2 Signals from bus coupler

If the busbar is divided by bus-section disconnectors into bus sections, the busbar-busbar connection could exist via the bus-section disconnector and bus-coupler within the other bus section.

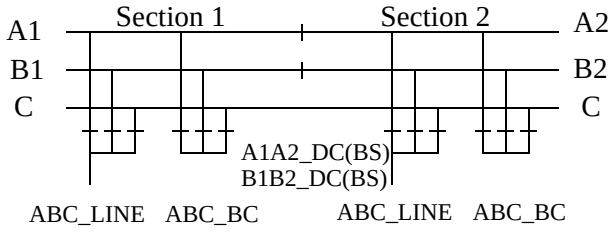

Figure 12: Busbars divided by bus-section disconnectors (circuit breakers)

To derive the signals:

BC_AB_CL
Signal if a bus-coupler connection exists between busbar A and B.

BC_AC_OP
Signal if there is no bus-coupler connection between busbar A and C.

BC_AC_CL
Signal if a bus-coupler connection exists between busbar A and C.

BC_BC_OP
Signal if there is no bus-coupler connection between busbar B and C.

BC_BC_CL
Signal if a bus-coupler connection exists between busbar B and C.

VP_BC_AB

The switch status of BC_AB is valid.

VP_BC_AC
The switch status of BC_AC is valid.

VP_BC_BC
The switch status of BC_BC is valid.

EXDUP_BC
Signal if there is no transmission error from bay BC (bus-coupler bay).

These signals from each bus-coupler bay (ABC_BC) are needed:

BCABCLTR
Signal if a bus-coupler connection through the own bus coupler exists between busbar A and B.

BCACOPTR
Signal if there is no bus-coupler connection through the own bus coupler between busbar A and C.

BCACCLTR
Signal if a bus-coupler connection through the own bus coupler exists between busbar A and C.

BCBCOPTR
Signal if there is no bus-coupler connection through the own bus coupler between busbar B and C.

BCBCCLTR
Signal if a bus-coupler connection through the own bus coupler exists between busbar B and C.

VPBCABTR
The switch status of BC_AB is valid.

VPBCACTR
The switch status of BC_AC is valid.

VPBCBCTR
The switch status of BC_BC is valid.

EXDUP_BC
Signal if there is no transmission error from the bay that contains the above information. This signal is taken from the data valid output on the command function block.

These signals from each bus-section disconnector bay (A1A2_DC) are also needed. For B1B2_DC, corresponding signals from busbar B are used. The same type of module (A1A2_DC) is used for different busbars, that is, for both bus-section disconnector A1A2_DC and B1B2_DC.

DCOPTR

Signal if the bus-section disconnector is open.

DCCLTR

Signal if the bus-section disconnector is closed.

VPDCTR

The switch status of A1A2_DC is valid.

EXDUP_DC

Signal if there is no transmission error from the bay that contains the above information. This signal is taken from the data valid output on the command function block.

If the busbar is divided by bus-section circuit breakers, the signals from the bus-section coupler bay (A1A2_BS), rather than the bus-section disconnector bay (A1A2_DC) must be used. For B1B2_BS, corresponding signals from busbar B are used. The same type of module (A1A2_BS) is used for different busbars, that is, for both bus-section circuit breakers A1A2_BS and B1B2_BS.

A1A2OPTR

Signal if there is no bus-section coupler connection between bus sections A1 and A2.

A1A2CLTR

Signal if a bus-section coupler connection exists between bus sections A1 and A2.

VPA1A2TR

The switch status of A1A2_DC is valid.

EXDUP_BS

Signal if there is no transmission error from the bay that contains the above information. This signal is taken from the data valid output on the command function block.

For a line bay in section 1, these conditions are valid:

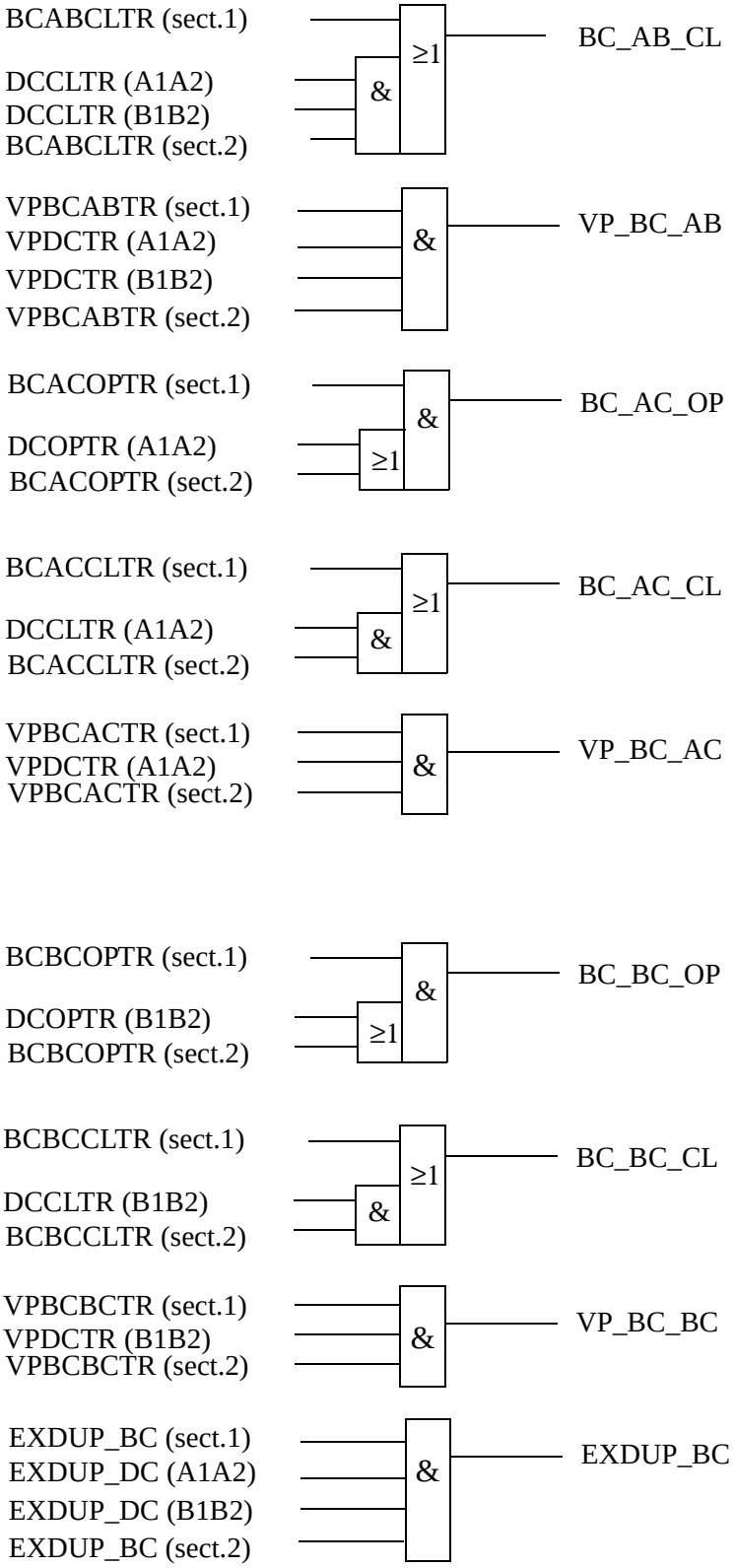

Figure 13: Signals to a line bay in section 1 from the bus-coupler bays in each section

For a line bay in section 2, the same conditions as above are valid by changing section 1 to section 2 and vice versa.

4.2.1.3 Parameter setting

If there is no bypass busbar and therefore no Q7 disconnector, then the interlocking for Q7 is not used. The states for Q7, Q75, C_DC, BC_AC, BC_BC are set to open by setting the appropriate module inputs as follows. In the functional block diagram, 0 and 1 are designated 0=FIXD-OFF and 1=FIXD-ON:

- Q7_OP = 1
- Q7_CL = 0

- Q75_OP = 1
- Q75_CL = 0

- C_DC_OP = 1

- BC_AC_OP = 1
- BC_AC_CL = 0
- BC_BC_OP = 1
- BC_BC_CL = 0

- EXDU_BPB = 1

- VP_C_DC = 1
- VP_BC_AC = 1
- VP_BC_BC = 1

If there is no second busbar B and therefore no Q2 disconnector, then the interlocking for Q2 is not used. The state for Q2, Q25, BC_AB, BC_BC are set to open by setting the appropriate module inputs as follows. In the functional block diagram, 0 and 1 are designated 0=FIXD-OFF and 1=FIXD-ON:

- Q2_OP = 1
- Q2_CL = 0

- Q25_OP = 1
- Q25_CL = 0

- BC_AB_CL = 0
- BC_BC_OP = 1
- BC_BC_CL = 0

- VP_BC_AB = 1

4.2.2 Single breaker arrangement, bus-coupler bay

4.2.2.1 Signals from all feeders

The signals from other bays connected to the bus-coupler module ABC_BC are described below.

To derive the signals:

BBTR_OP
Signal if no busbar transfer is in progress concerning this bus coupler.

VP_BBTR
The switch status of BBTR is valid.

EXDUP_AB
Signal if there is no transmission error from any bay connected to the AB busbars.

These signals from each line bay (ABC_LINE), each transformer bay (ABC_TRAFO), and bus-coupler bay (ABC_BC), except the own bus-coupler bay are needed:

Q1Q2OPTR
Signal if Q1 or Q2 or both are open.

VPQ1Q2TR
The switch status of Q1 and Q2 are valid.

EXDUP_AB
Signal if there is no transmission error from the bay that contains the above information. This signal is taken from the data valid output on the command function block.

For bus-coupler bay n, these conditions are valid:

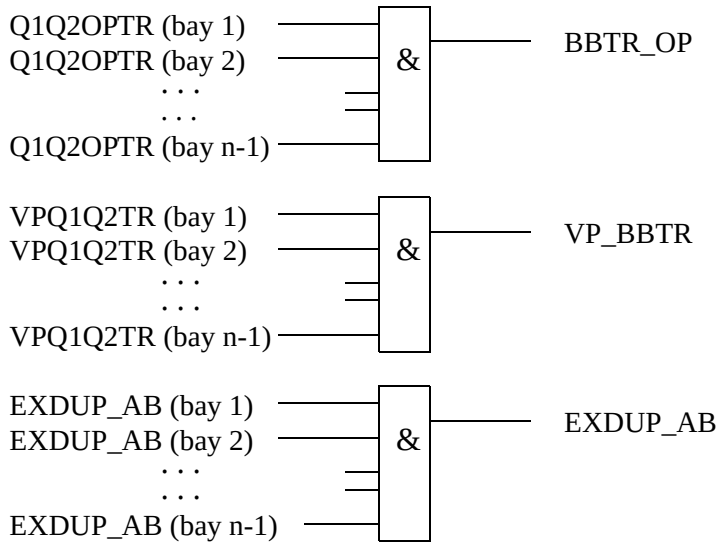

Figure 14: Signals from any bays in bus-coupler bay n

If the busbar is divided by bus-section disconnectors into bus sections, the signals BBTR are connected in parallel - if both bus-section disconnectors are closed. So for the basic project-specific logic for BBTR above, add this logic:

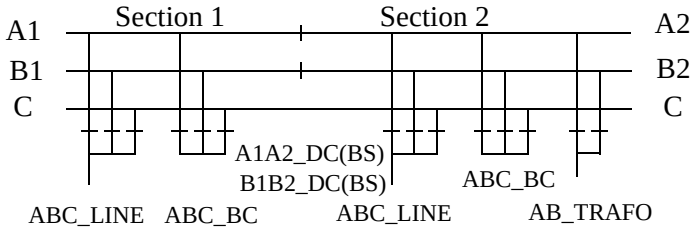

Figure 15: Busbars divided by bus-section disconnectors (circuit breakers)

The following signals from each bus-section disconnector bay (A1A2_DC) are needed. For B1B2_DC, corresponding signals from busbar B are used. The same type of module (A1A2_DC) is used for different busbars, that is, for both bus-section disconnector A1A2_DC and B1B2_DC.

DCOPTR

Signal if the bus-section disconnector is open.

VPDCTR

The switch status of A1A2_DC is valid.

EXDUP_DC

Signal if there is no transmission error from the bay that contains the above information. This signal is taken from the data valid output on the command function block.

If the busbar is divided by bus-section circuit breakers, the signals from the bus-section coupler bay (A1A2_BS), rather than the bus-section disconnector bay (A1A2_DC), have to be used. For B1B2_BS, corresponding signals from busbar B are used. The same type of module (A1A2_BS) is used for different busbars, that is, for both bus-section circuit breakers A1A2_BS and B1B2_BS.

A1A2OPTR

Signal if there is no bus-section coupler connection between bus sections A1 and A2.

VPA1A2TR

The switch status of A1A2_DC is valid.

EXDUP_BS

Signal if there is no transmission error from the bay that contains the above information. This signal is taken from the data valid output on the command function block.

For a bus-coupler bay in section 1, these conditions are valid:

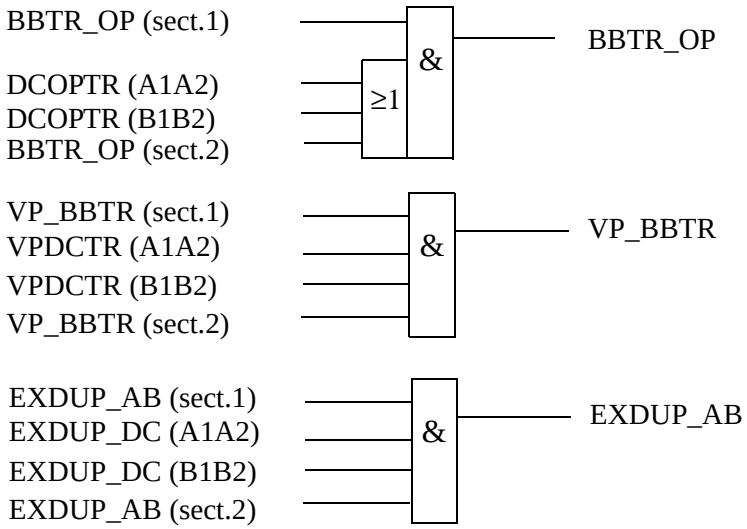

Figure 16: Signals to a bus-coupler bay in section 1 from any bays in each section

For a bus-coupler bay in section 2, the same conditions as above are valid by changing section 1 to section 2 and vice versa.

4.2.2.2 Signals from bus coupler

If the busbar is divided by bus-section disconnectors into bus sections, the signals BC_AB from the busbar coupler of the other busbar section must be transmitted to the own busbar coupler if both disconnectors are closed.

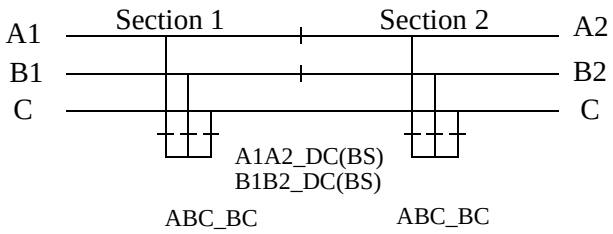

Figure 17: Busbars divided by bus-section disconnectors (circuit breakers)

To derive the signals:

BC_AB_CL
Signal if an other bus-coupler connection exists between busbar A and B.

VP_BC_AB
The switch status of BC_AB is valid.

EXDUP_BC
Signal if there is no transmission error from bay BC (bus-coupler bay).

These signals from each bus-coupler bay (ABC_BC), except the own bay are needed:

BCABCLTR
Signal if a bus-coupler connection through the own bus coupler exists between busbar A and B.

VPBCABTR
The switch status of BC_AB is valid.

EXDUP_BC
Signal if there is no transmission error from the bay that contains the above information. This signal is taken from the data valid output on the command function block.

These signals from each bus-section disconnector bay (A1A2_DC) are also needed. For B1B2_DC, corresponding signals from busbar B are used. The same type of module (A1A2_DC) is used for different busbars, that is, for both bus-section disconnector A1A2_DC and B1B2_DC.

DCCLTR
Signal if the bus-section disconnector is closed.

VPDCTR
The switch status of A1A2_DC is valid.

EXDUP_DC
Signal if there is no transmission error from the bay that contains the above information. This signal is taken from the data valid output on the command function block.

If the busbar is divided by bus-section circuit breakers, the signals from the bus-section coupler bay (A1A2_BS), rather than the bus-section disconnector bay (A1A2_DC), must be used. For B1B2_BS, corresponding signals from busbar B are used. The same type of module (A1A2_BS) is used for different busbars, that is, for both bus-section circuit breakers A1A2_BS and B1B2_BS.

A1A2CLTR

Signal if a bus-section coupler connection exists between bus sections A1 and A2.

VPA1A2TR

The switch status of A1A2_DC is valid.

EXDUP_BS

Signal if no transmission error from the bay containing the above information. This signal is taken from the data valid output on the command function block.

For a bus-coupler bay in section 1, these conditions are valid:

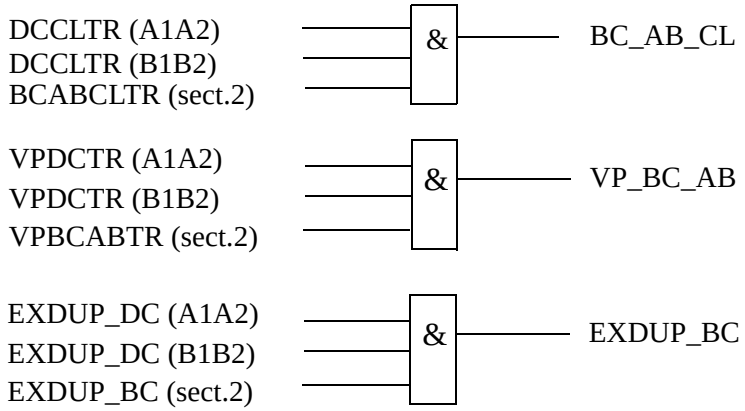

Figure 18: Signals to a bus-coupler bay in section 1 from a bus-coupler bay in an other section

For a bus-coupler bay in section 2, the same conditions as above are valid by changing section 1 to section 2 and vice versa.

4.2.2.3 Parameter setting

If there is no bypass busbar and therefore no Q20 and Q7 disconnectors, then the interlocking for Q20 and Q7 is not used. The states for Q20, Q7, Q75, BC_AB are set to open by setting the appropriate module inputs as follows. In the functional block diagram, 0 and 1 are designated 0=FIXD-OFF and 1=FIXD-ON:

- Q20_OP = 1
- Q20_CL = 0

- Q7_OP = 1
- Q7_CL = 0

- Q75_OP = 1
- Q75_CL = 0

- BC_AB_CL = 0

If there is no second busbar B and therefore no Q20 and Q2 disconnectors, then the interlocking for Q20 and Q2 are not used. The states for Q20, Q2, Q25, BC_AB, BBTR are set to open by setting the appropriate module inputs as follows. In the functional block diagram, 0 and 1 are designated 0=FIXD-OFF and 1=FIXD-ON:

- Q20_OP = 1
- Q20_CL = 0
- Q2_OP = 1
- Q2_CL = 0
- Q25_OP = 1
- Q25_CL = 0
- BC_AB_CL = 0
- BBTR_OP = 1

4.2.3 Single breaker arrangement, transformer bay

4.2.3.1 Signals from bus coupler

If the busbar is divided by bus-section disconnectors into bus sections, the busbar-busbar connection could exist via the bus-section disconnector and bus coupler within the other bus section.

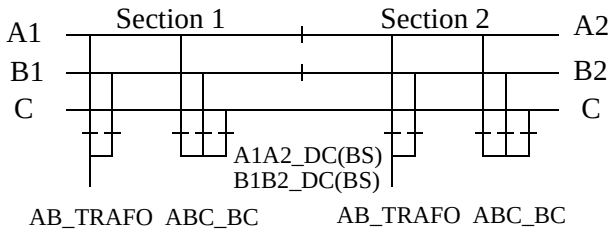

Figure 19: Busbars divided by bus-section disconnectors (circuit breakers)

The project-specific logic for input signals concerning bus coupler are the same as the specific logic for the line bay (ABC_LINE):

BC_AB_CL

Signal if a bus-coupler connection exists between busbar A and B.

VP_BC_AB

The switch status of BC_AB is valid.

EXDUP_BC

Signal if there is no transmission error from bay BC (bus-coupler bay).

See “Signals from bus coupler” on page 241.

4.2.3.2 Parameter setting

If there is no second busbar B and therefore no Q2 disconnector, then the interlocking for Q2 is not used. The state for Q2, Q25, BC_AB are set to open by setting the appropriate module inputs as follows. In the functional block diagram, 0 and 1 are designated 0=FIXD-OFF and 1=FIXD-ON:

- Q2_OP = 1
- Q2_CL = 0

- Q25_OP = 1
- Q25_CL = 0

- BC_AB_CL = 0

If there is no second busbar B at the other side of the transformer and therefore no TQ2 disconnector, then the state for TQ2 is set to open by setting the appropriate module inputs as follows:

- TQ2_OP = 1
- TQ2_CL = 0

4.2.4 Double-breaker arrangement

For a double circuit-breaker bay, the modules DB_BUS_A, DB_LINE and DB_BUS_B must be used.

4.2.4.1 Parameter setting

For application without Q9 and Q8, just set the appropriate inputs to open state and disregard the outputs. In the functional block diagram, 0 and 1 are designated 0=FIXD-OFF and 1=FIXD-ON:

- Q9_OP = 1
- Q9_CL = 0

- Q8_OP = 1
- Q8_CL = 0

If, in this case, a line voltage supervision is added, then rather than setting Q9 to open state, specify the state of the voltage supervision:

- Q9_OP = VOLT_OP
- Q9_CL = VOLT_CL

If there is no voltage supervision, then set the corresponding inputs as follows:

- VOLT_OP = 1
- VOLT_CL = 0

4.2.5 Breaker and a half arrangement

For a breaker-and-a-half arrangement, the modules BH_LINE_A, BH_CONN and BH_LINE_B must be used.

4.2.5.1 Parameter setting

For application without Q9 and Q8, just set the appropriate inputs to open state and disregard the outputs. In the functional block diagram, 0 and 1 are designated 0=FIXD-OFF and 1=FIXD-ON:

- Q9_OP = 1
- Q9_CL = 0

- Q8_OP = 1
- Q8_CL = 0

If, in this case, a line voltage supervision is added, then rather than setting Q9 to open state, specify the state of the voltage supervision:

- Q9_OP = VOLT_OP
- Q9_CL = VOLT_CL

If there is no voltage supervision, then set the corresponding inputs as follows:

- VOLT_OP = 1
- VOLT_CL = 0

4.2.6 Bus-section breaker

4.2.6.1 Signals from all feeders

If the busbar is divided by bus-section circuit breakers into bus sections and both circuit breaker are closed, the opening of the circuit breaker must be blocked if a bus-coupler connection exists between busbar A and B on one bus-section side and if on the other bus-section side a busbar transfer is in progress:

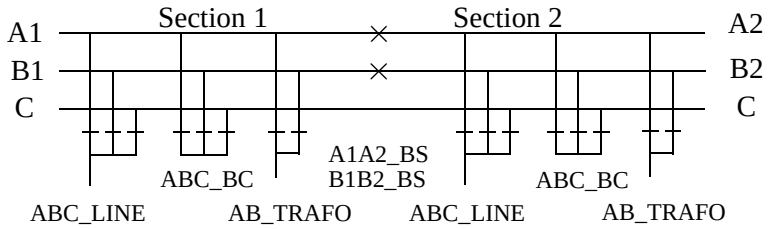

Figure 20: Busbars divided by bus-section circuit breakers

To derive the signals:

BBTR_OP
Signal if no busbar transfer is in progress concerning this bus section.

VP_BBTR
The switch status of BBTR is valid.

EXDUP_AB
Signal if there is no transmission error from any bay connected to the AB busbars.

These signals from each line bay (ABC_LINE), each transformer bay (ABC_TRAFO), and bus-coupler bay (ABC_BC) are needed:

Q1Q2OPTR
Signal if Q1 or Q2 or both are open.

VPQ1Q2TR
The switch status of Q1 and Q2 are valid.

EXDUP_AB

Signal if there is no transmission error from the bay that contains the above information. This signal is taken from the data valid output on the command function block.

These signals from each bus-coupler bay (ABC_BC) are needed:

BCABOPTR

Signal if there is no bus-coupler connection through the own bus coupler between busbar A and B.

VPBCABTR

The switch status of BC_AB is valid.

EXDUP_BC

Signal if there is no transmission error from the bay that contains the above information. This signal is taken from the data valid output on the command function block.

These signals from the bus-section circuit breaker bay (A1A2_BS, B1B2_BS) are needed.

A1A2OPTR

Signal if there is no bus-section coupler connection between bus sections A1 and A2.

VPA1A2TR

The switch status of A1A2_BS is valid.

EXDUP_BS

Signal if there is no transmission error from the bay that contains the above information. This signal is taken from the data valid output on the command function block.

For a bus-section circuit breaker between A1 and A2 section busbars, these conditions are valid:

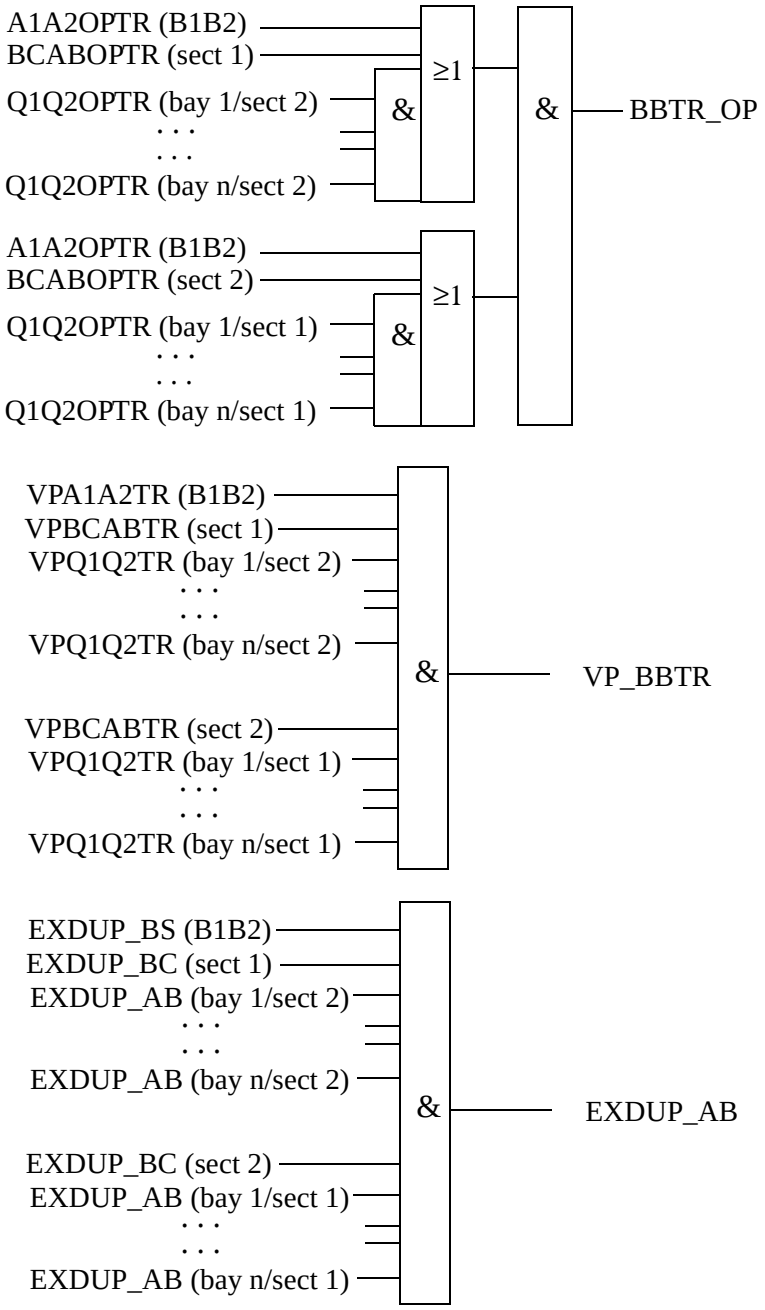

Figure 21: Signals from any bays for a bus-section circuit breaker between sections A1 and A2

For a bus-section circuit breaker between B1 and B2 section busbars, these conditions are valid:

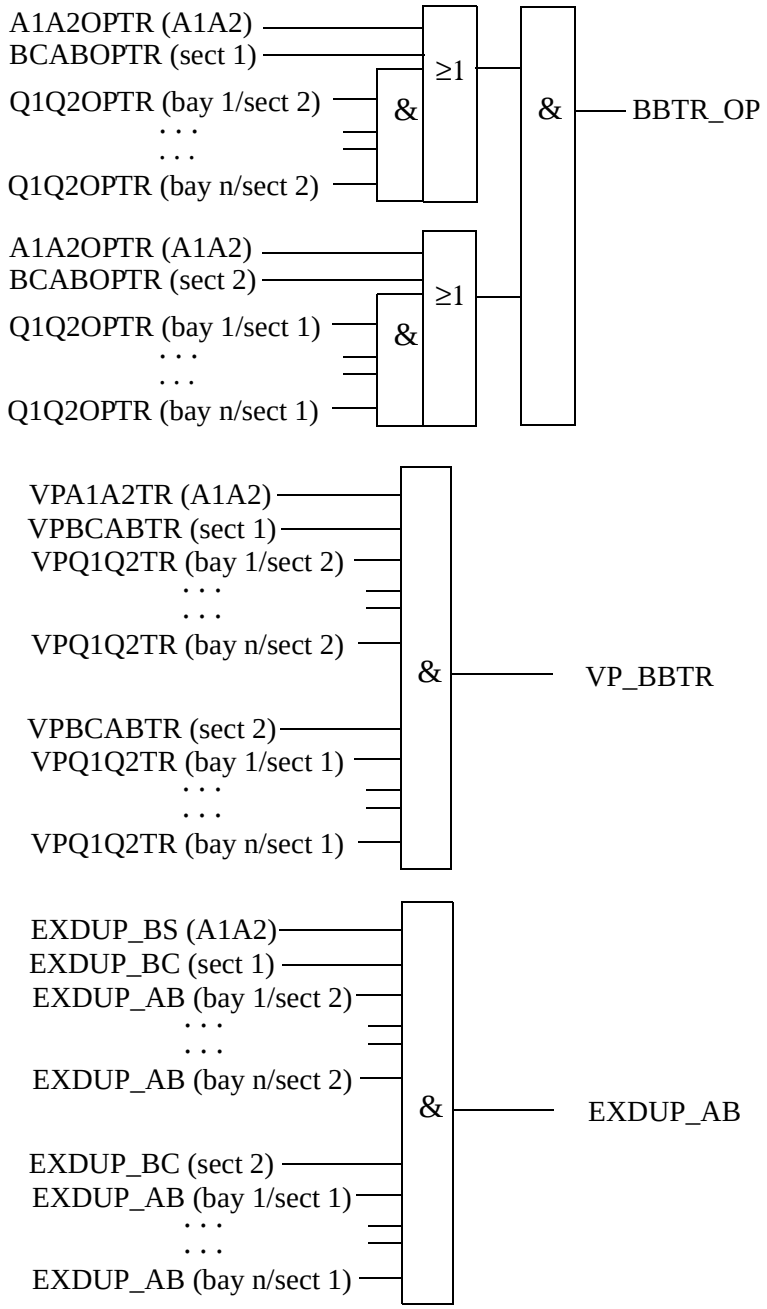

Figure 22: Signals from any bays for a bus-section circuit breaker between sections B1 and B2

4.2.6.2 Parameter setting

If there is no other busbar via the busbar loops that are possible, then either the interlocking for the Q0 open circuit breaker is not used or the state for BBTR is set to open. That is, no busbar transfer is in progress in this bus section:

- BBTR_OP = 1

4.2.7 Bus-section disconnector

4.2.7.1 Signals in single breaker arrangement

If the busbar is divided by bus-section disconnectors, the signal *no other disconnector connected to the bus section* must be made by a project-specific logic.

The same type of module (A1A2_DC) is used for different busbars, that is, for both bus-section disconnector A1A2_DC and B1B2_DC. But for B1B2_DC, corresponding signals from busbar B are used.

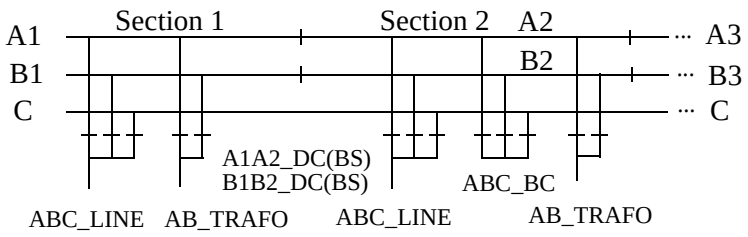

Figure 23: Busbars divided by bus-section disconnectors (circuit breakers)

To derive the signals:

A1DC_OP
Signal if all disconnectors on busbar A1 are open.

A2DC_OP
Signal if all disconnectors on busbar A2 are open.

VPA1_DC
The switch status of A1_DC is valid.

VPA2_DC
The switch status of A2_DC is valid.

EXDUP_BB
Signal if there is no transmission error from any bay that contains the above information.

These signals from each line bay (ABC_LINE), each transformer bay (AB_TRAFO), and each bus-coupler bay (ABC_BC) are needed:

Q1OPTR
Signal if Q1 is open.

Q2OPTR
Signal if Q2 (AB_TRAFO, ABC_LINE) is open.

Q20OPTR
Signal if Q20 (ABC_BC) is open.

VPQ1TR
The switch status of Q1 is valid.

VPQ2TR
The switch status of Q2 is valid.

VPQ20TR
The switch status of Q2 and Q20 are valid.

EXDUP_BB
Signal if there is no transmission error from the bay that contains the above information. This signal is taken from the data valid output on the command function block.

If there is an additional bus-section disconnector, the signal from the bus-section disconnector bay (A1A2_DC) must be used:

DCOPTR
Signal if the bus-section disconnector is open.

VPDCTR
The switch status of A1A2_DC is valid.

EXDUP_DC
Signal if there is no transmission error from the bay that contains the above information. This signal is taken from the data valid output on the command function block.

If there is an additional bus-section circuit breaker rather than an additional bus-section disconnector the signals from the bus-section, circuit-breaker bay (A1A2_BS) rather than the bus-section disconnector bay (A1A2_DC) must be used:

Q11OPTR
Signal if Q11 is open.

Q12OPTR
Signal if Q12 is open.

VPQ11TR
The switch status of Q11 is valid.

VPQ12TR

The switch status of Q12 is valid.

EXDUP_BS

Signal if there is no transmission error from the bay BS (bus-section coupler bay) that contains the above information. This signal is taken from the data valid output on the command function block.

For a bus-section disconnector, these conditions from the A1 busbar section are valid:

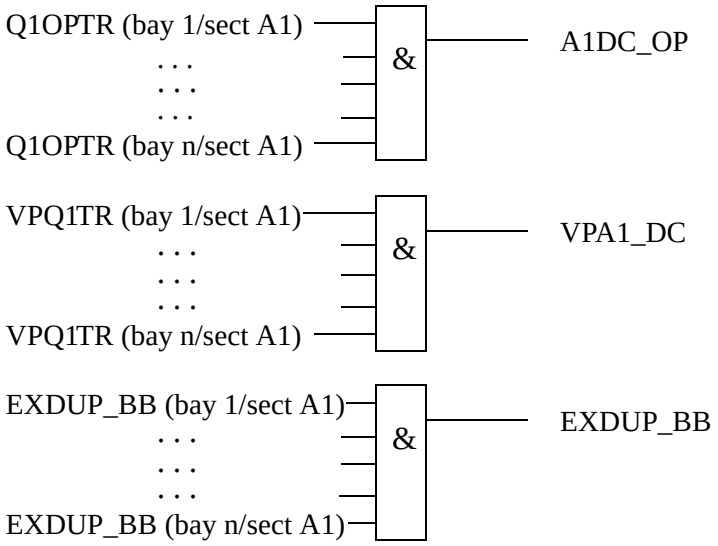

Figure 24: Signals from any bays in section A1 to a bus-section disconnector

For a bus-section disconnector, these conditions from the A2 busbar section are valid:

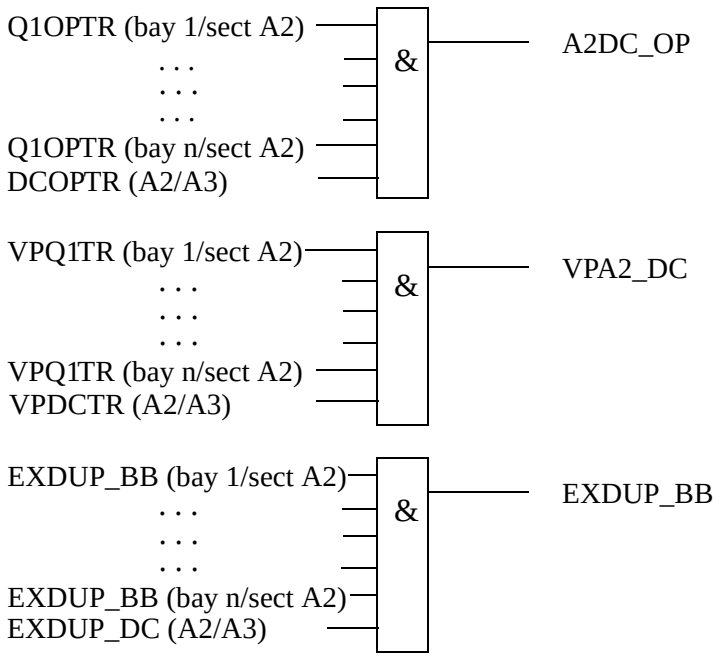

Figure 25: Signals from any bays in section A2 to a bus-section disconnector

For a bus-section disconnector, these conditions from the B1 busbar section are valid:

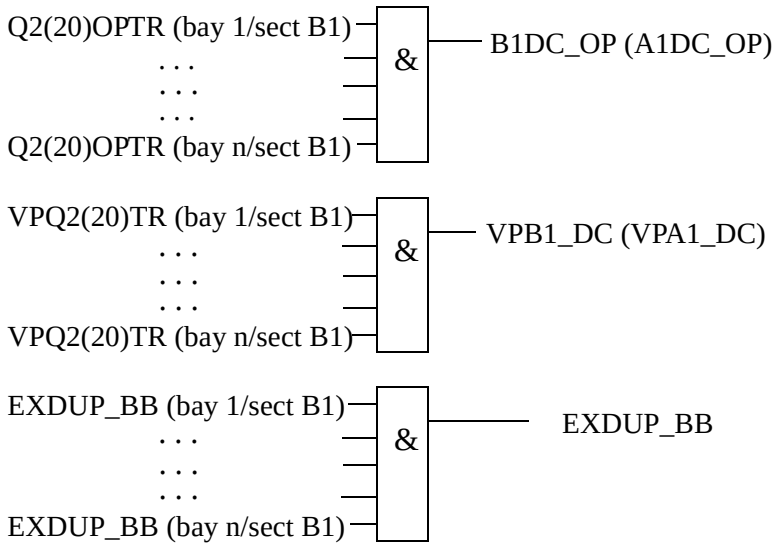

Figure 26: Signals from any bays in section B1 to a bus-section disconnector

For a bus-section disconnector, these conditions from the B2 busbar section are valid:

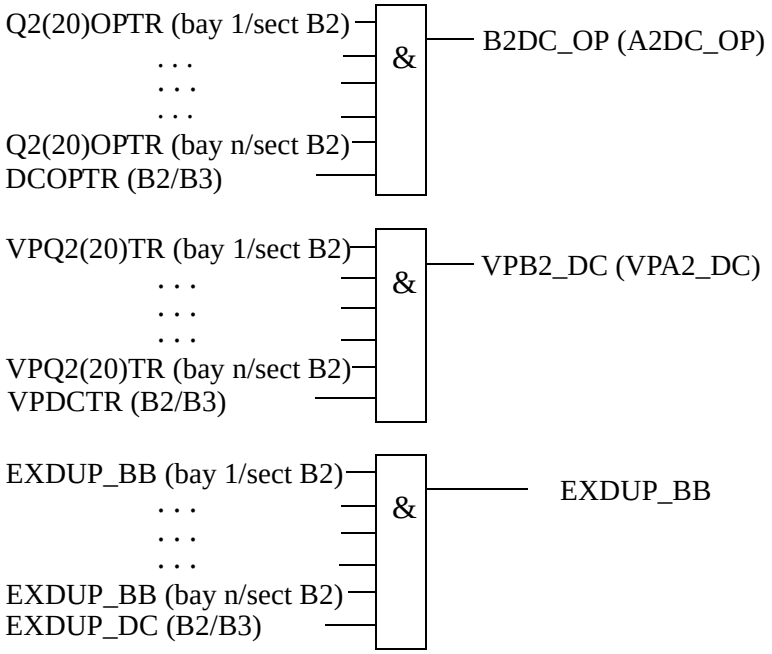

Figure 27: Signals from any bays in section B2 to a bus-section disconnector

4.2.7.2 Signals in double-breaker arrangement

If the busbar is divided by bus-section disconnectors, the signal for the busbar disconnector bay *no other disconnector connected to the bus section* must be made by a project-specific logic.

The same type of module (A1A2_DC) is used for different busbars, that is, for both bus-section disconnector A1A2_DC and B1B2_DC. But for B1B2_DC, corresponding signals from busbar B are used.

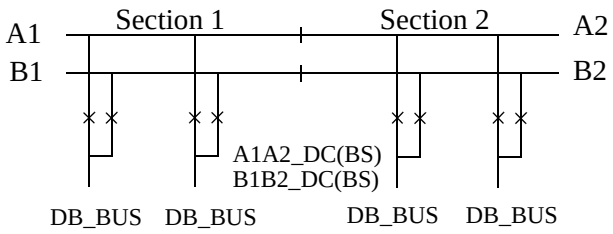

Figure 28: Busbars divided by bus-section disconnectors (circuit breakers)

To derive the signals:

A1DC_OP
Signal if all disconnectors on busbar A1 are open.

A2DC_OP
Signal if all disconnectors on busbar A2 are open.

VPA1_DC
The switch status of A1_DC is valid.

VPA2_DC
The switch status of A2_DC is valid.

EXDUP_BB
Signal if there is no transmission error from bay DB (double-breaker bay) that contains the above information.

These signals from each double-breaker bay (DB_BUS) are needed:

Q1OPTR
Signal if Q1 is open.

Q2OPTR
Signal if Q2 is open.

VPQ1TR
The switch status of Q1 is valid.

VPQ2TR
The switch status of Q2 is valid.

EXDUP_DB
Signal if there is no transmission error from the bay that contains the above information. This signal is taken from the data valid output on the command function block.

The logic is identical to the double busbar configuration described in “4.2.7.1 Signals in single breaker arrangement”.

For a bus-section disconnector, these conditions from the A1 busbar section are valid:

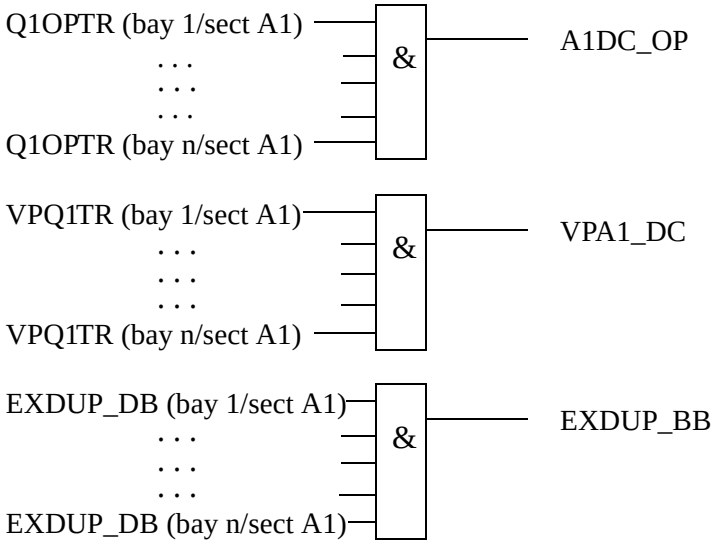

Figure 29: Signals from double-breaker bays in section A1 to a bus-section disconnector

For a bus-section disconnector, these conditions from the A2 busbar section are valid:

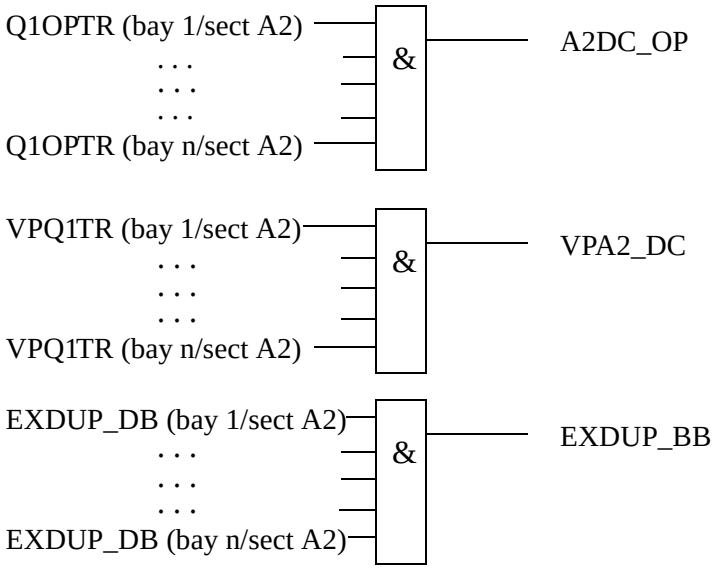

Figure 30: Signals from double-breaker bays in section A2 to a bus-section disconnector

For a bus-section disconnector, these conditions from the B1 busbar section are valid:

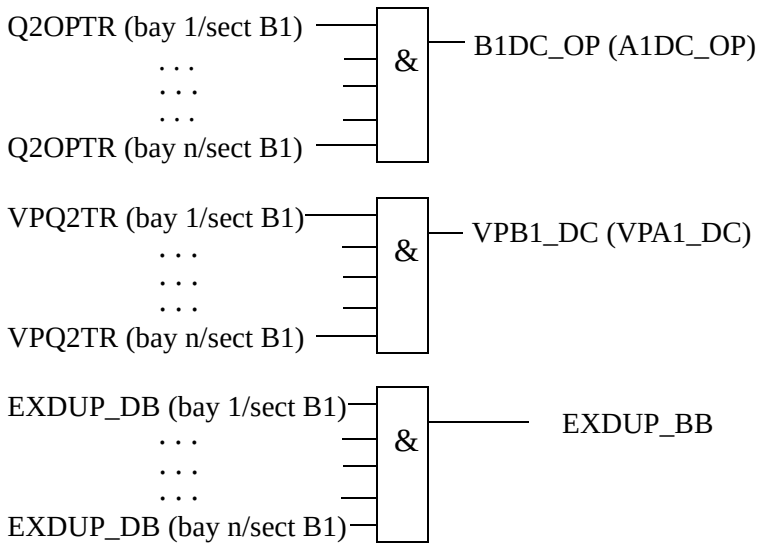

Figure 31: Signals from double-breaker bays in section B1 to a bus-section disconnector

For a bus-section disconnector, these conditions from the B2 busbar section are valid:

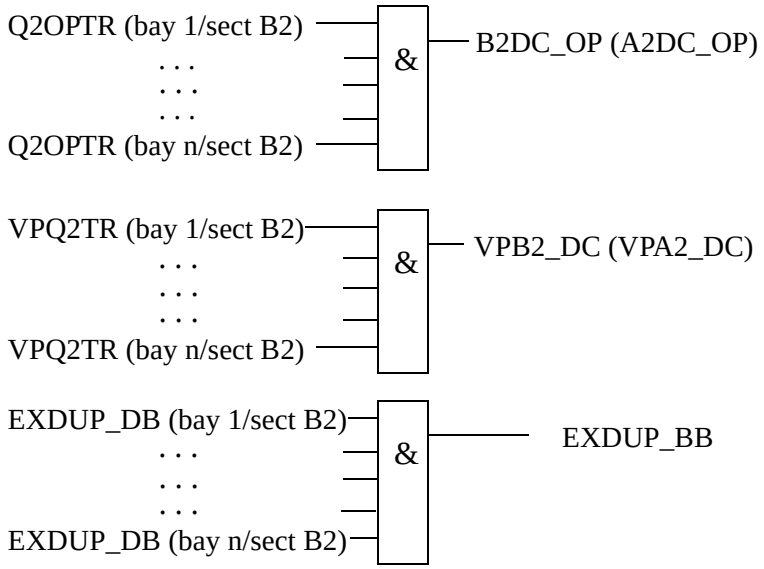

Figure 32: Signals from double-breaker bays in section B2 to a bus-section disconnector

4.2.7.3 Signals in breaker and a half arrangement

If the busbar is divided by bus-section disconnectors, the signal for the busbar disconnector bay *no other disconnector connected to the bus section* must be made by a project-specific logic.

The same type of module (A1A2_DC) is used for different busbars, that is, for both bus-section disconnector A1A2_DC and B1B2_DC. But for B1B2_DC, corresponding signals from busbar B are used.

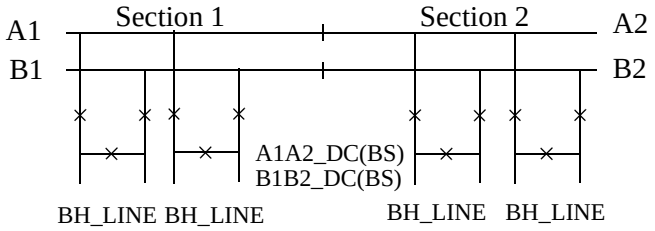

Figure 33: Busbars divided by bus-section disconnectors (circuit breakers)

The project-specific logic are the same as for the logic for the double-breaker configuration. See “Signals in double-breaker arrangement” on page 262.

A1DC_OP

Signal if all disconnectors on busbar A1 are open.

A2DC_OP

Signal if all disconnectors on busbar A2 are open.

VPA1_DC

The switch status of A1_DC is valid.

VPA2_DC

The switch status of A2_DC is valid.

EXDUP_BB

Signal if there is no transmission error from bay BH (breaker and a half) that contains the above information.

4.2.8 Bus earthing switch

4.2.8.1 Signals in single breaker arrangement

The busbar earthing switch is only allowed to operate if all disconnectors of the bus section are open.

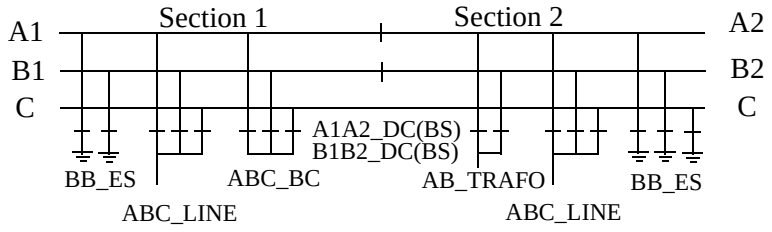

Figure 34: Busbars divided by bus-section disconnectors (circuit breakers)

To derive the signals:

ABCDC_OP
Signal if all disconnectors of this busbar section are open.

VP_ABCDC
The switch status of ABCDC is valid.

EXDUP_BB
Signal if no transmission error from any bay containing the above information.

These signals from each line bay (ABC_LINE), each transformer bay (AB_TRAFO), and each bus-coupler bay (ABC_BC) are needed:

Q1OPTR
Signal if Q1 is open.

Q2OPTR
Signal if Q2 (AB_TRAFO, ABC_LINE) is open.

Q20OPTR
Signal if Q2 and Q20 (ABC_BC) are open.

Q7OPTR
Signal if Q7 is open.

VPQ1TR
The switch status of Q1 is valid.

VPQ2TR
The switch status of Q2 is valid.

VPQ20TR
The switch status of Q2 and Q20 are valid.

VPQ7TR
The switch status of Q7 is valid.

EXDUP_BB
Signal if there is no transmission error from the bay that contains the above information.This signal is taken from the data valid output on the command function block.

These signals from each bus-section disconnector bay (A1A2_DC) are also needed. For B1B2_DC, corresponding signals from busbar B are used. The same type of module (A1A2_DC) is used for different busbars, that is, for both bus-section disconnectors A1A2_DC and B1B2_DC.

DCOPTR
Signal if the bus-section disconnector is open.

VPDCTR
The switch status of A1A2_DC is valid.

EXDUP_DC

Signal if there is no transmission error from the bay that contains the above information. This signal is taken from the data valid output on the command function block.

If no bus-section disconnector exists the signal DCOPTR, VPDCTR and EXDUP_DC are set to 1 (FIXD-ON).

If the busbar is divided by bus-section circuit breakers, the signals from the bus-section coupler bay (A1A2_BS) rather than the bus-section disconnector bay (A1A2_DC) must be used. For B1B2_BS, corresponding signals from busbar B are used. The same type of module (A1A2_BS) is used for different busbars, that is, for both bus-section circuit breakers A1A2_BS and B1B2_BS.

Q11OPTR

Signal if Q11 is open.

Q12OPTR

Signal if Q12 is open.

VPQ11TR

The switch status of Q11 is valid.

VPQ12TR

The switch status of Q12 is valid.

EXDUP_BS

Signal if there is no transmission error from the bay (bus-section coupler bay) that contains the above information. This signal is taken from the data valid output on the command function block.

For a busbar earthing switch, these conditions from the A1 busbar section are valid:

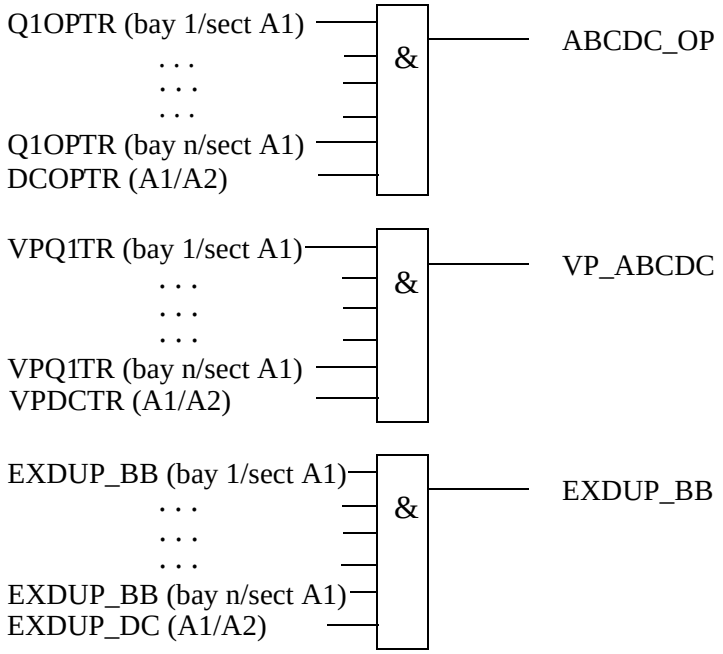

Figure 35: Signals from any bays in section A1 to a busbar earthing switch in the same section

For a busbar earthing switch, these conditions from the A2 busbar section are valid:

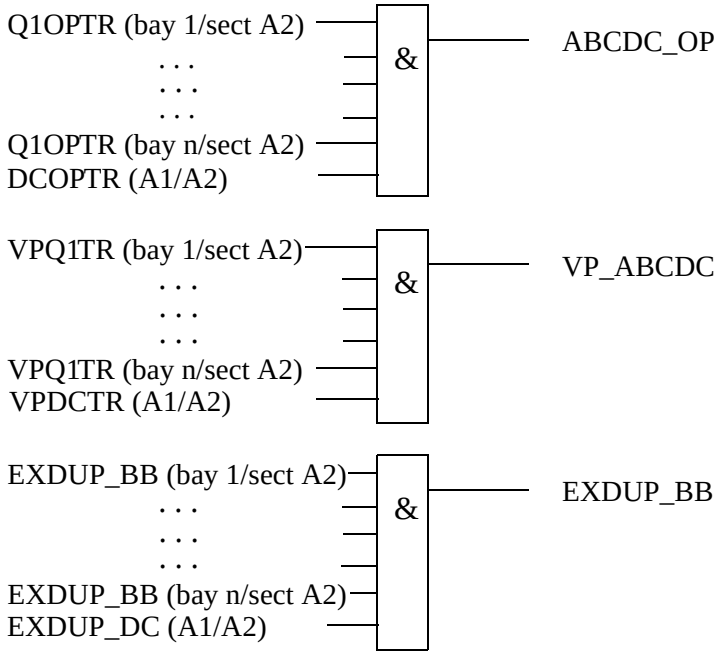

Figure 36: Signals from any bays in section A2 to a busbar earthing switch in the same section

For a busbar earthing switch, these conditions from the B1 busbar section are valid:

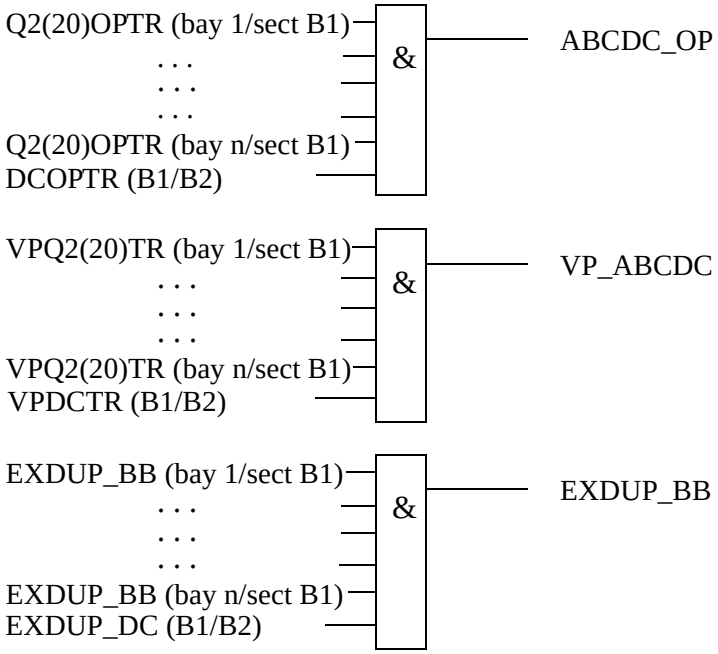

Figure 37: Signals from any bays in section B1 to a busbar earthing switch in the same section

For a busbar earthing switch, these conditions from the B2 busbar section are valid:

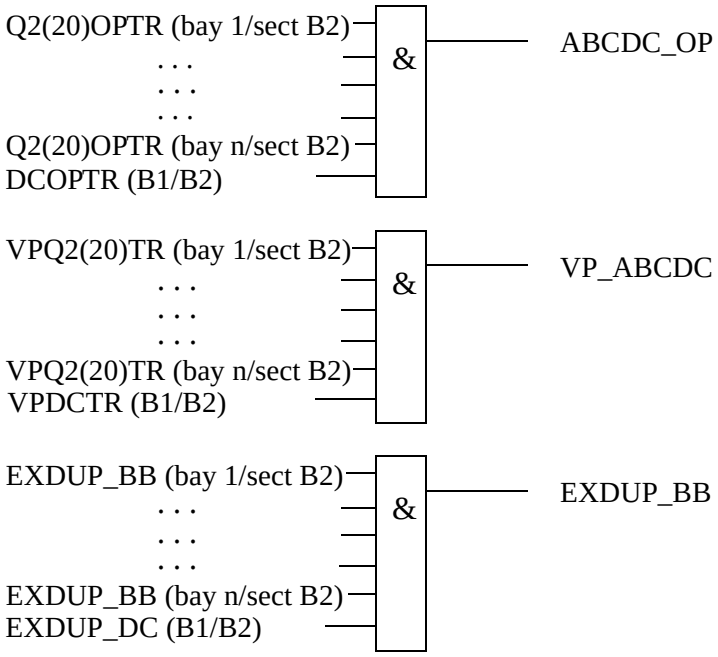

Figure 38: Signals from any bays in section B2 to a busbar earthing switch in the same section

For a busbar earthing switch on bypass busbar C, these conditions are valid:

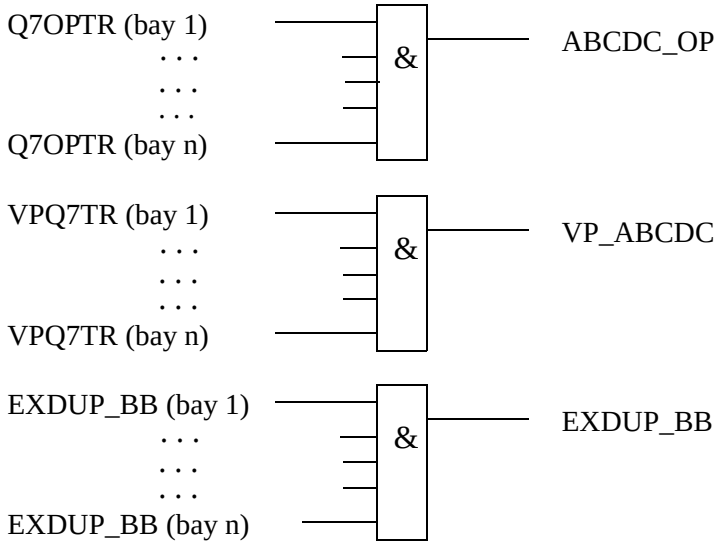

Figure 39: Signals from bypass busbar to busbar earthing switch

4.2.8.2 Signals in double-breaker arrangement

The busbar earthing switch is only allowed to operate if all disconnectors of the bus section are open.

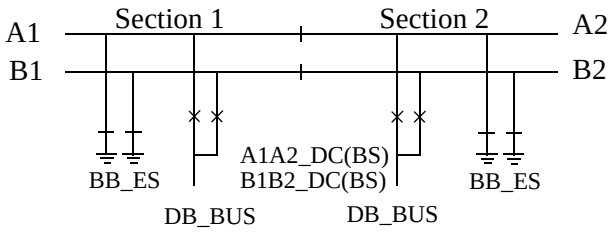

Figure 40: Busbars divided by bus-section disconnectors (circuit breakers)

To derive the signals:

ABCDC_OP

Signal if all disconnectors of this busbar section are open.

VP_ABCDC

The switch status of ABCDC is valid.

EXDUP_BB

Signal if there is no transmission error from any bay that contains the above information.

These signals from each double-breaker bay (DB_BUS) are needed:

Q1OPTR
Signal if Q1 is open.

Q2OPTR
Signal if Q2 is open.

VPQ1TR
The switch status of Q1 is valid.

VPQ2TR
The switch status of Q2 is valid.

EXDUP_DB
Signal if there is no transmission error from the bay that contains the above information. This signal is taken from the data valid output on the command function block.

These signals from each bus-section disconnector bay (A1A2_DC) are also needed. For B1B2_DC, corresponding signals from busbar B are used. The same type of module (A1A2_DC) is used for different busbars, that is, for both bus-section disconnectors A1A2_DC and B1B2_DC.

DCOPTR
Signal if the bus-section disconnector is open.

VPDCTR
The switch status of A1A2_DC is valid.

EXDUP_DC
Signal if there is no transmission error from the bay that contains the above information. This signal is taken from the data valid output on the command function block.

The logic is identical to the double busbar configuration described in “4.2.8.1 Signals in single breaker arrangement”.

4.2.8.3 Signals in breaker and a half arrangement

The busbar earthing switch is only allowed to operate if all disconnectors of the bus section are open.

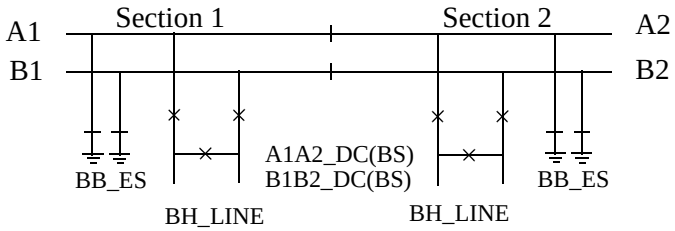

Figure 41: Busbars divided by bus-section disconnectors (circuit breakers)

The project-specific logic are the same as for the logic for the double busbar configuration. See “4.2.8.1 Signals in single breaker arrangement”

ABCDC_OP

Signal if all disconnectors of this busbar section are open.

VP_ABCDC

The switch status of ABCDC is valid.

EXDUP_BB

Signal if there is no transmission error from any bay that contains the above information.

5 Testing

The interlocking function consists of a bay-level part and a station-level part. The interlocking is delivery specific and is realised by bay-to-bay communication over the station bus. For that reason, test the function in a system, that is, either in a complete delivery system as an acceptance test (FAT/SAT) or as parts of that system.

6 Appendix

6.1 Function blocks and function block diagrams

6.1.1 ABC_LINE

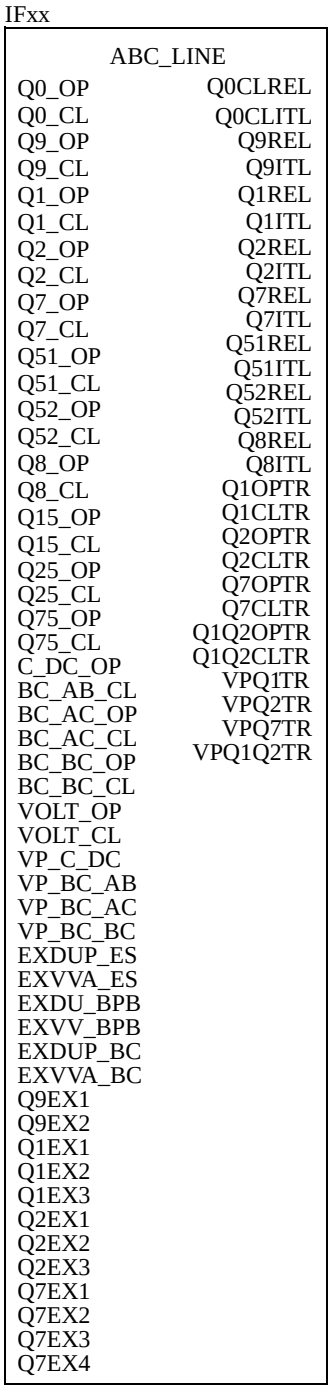

Figure 42: Function block ABC_LINE

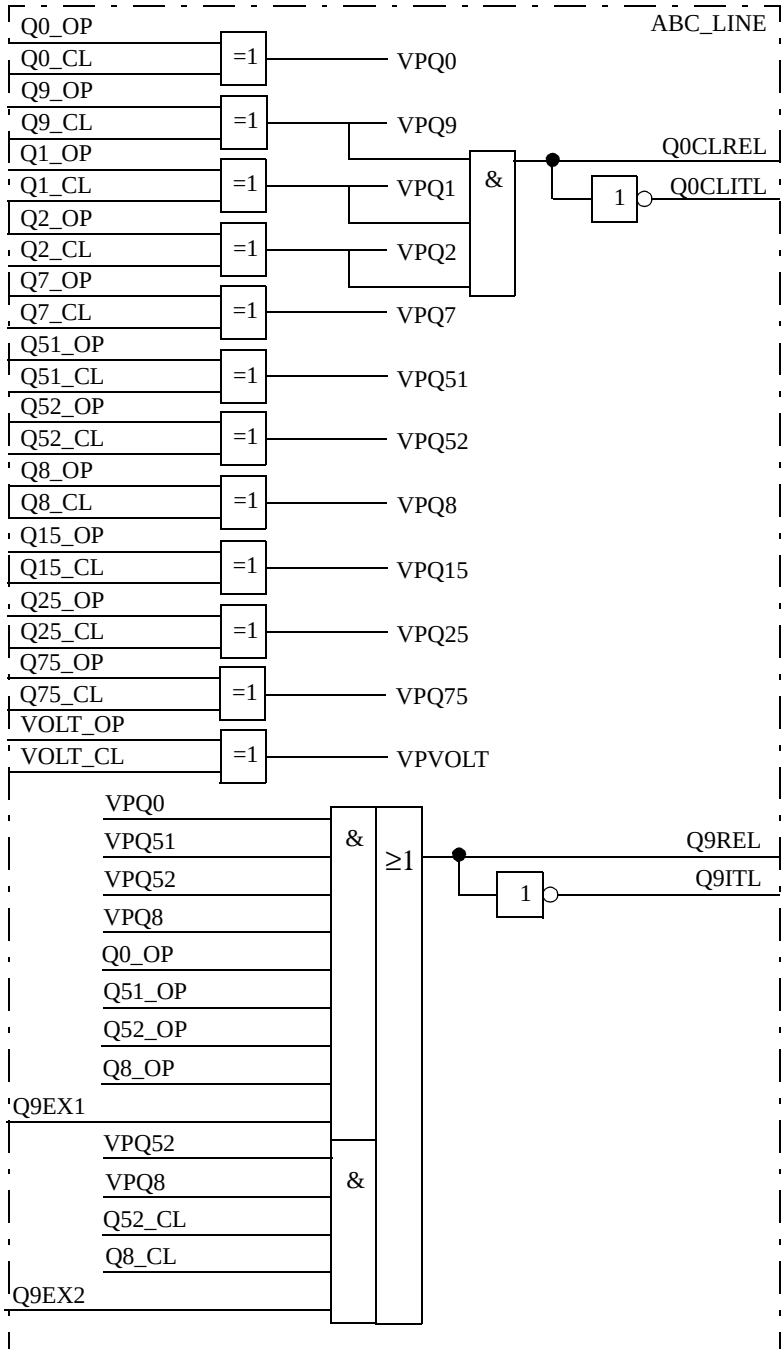
ABC_LINE
Q0_OP
Q0_CL
Q9_OP
Q9_CL
Q1_OP
Q1_CL
Q2_OP
Q2_CL
Q7_OP
Q7_CL
Q51_OP
Q51_CL
Q52_OP
Q52_CL
Q8_OP
Q8_CL
Q15_OP
Q15_CL
Q25_OP
Q25_CL
Q75_OP
Q75_CL
VOLT_OP
VOLT_CL
=1
VPQ0
VPQ9
VPQ1
VPQ2
VPQ7
VPQ51
VPQ52
VPQ8
VPQ15
VPQ25
VPQ75
VPVOLT
&
1
Q0CLREL
Q0CLITL
VPQ0
VPQ51
VPQ52
VPQ8
Q0_OP
Q51_OP
Q52_OP
Q8_OP
Q9EX1
VPQ52
VPQ8
Q52_CL
Q8_CL
Q9EX2
&
&
≥1
1
Q9REL
Q9ITL

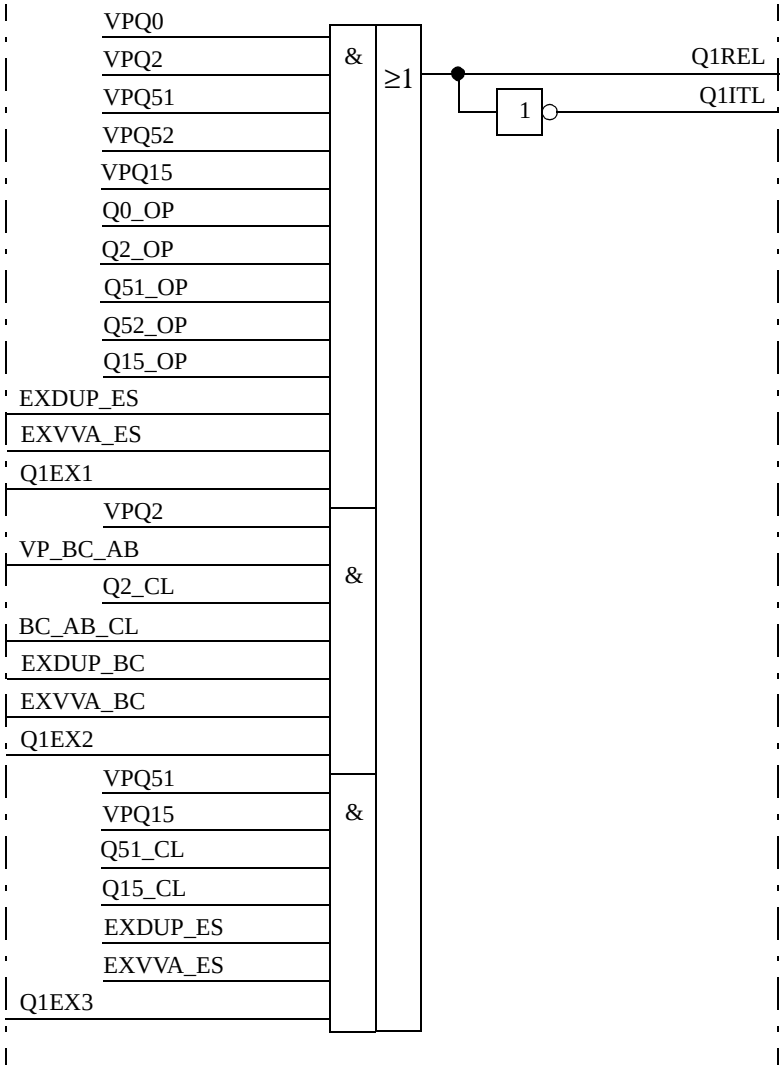
VPQ0
VPQ2
VPQ51
VPQ52
VPQ15
Q0_OP
Q2_OP
Q51_OP
Q52_OP
Q15_OP
EXDUP_ES
EXVVA_ES
Q1EX1
VPQ2
VP_BC_AB
Q2_CL
BC_AB_CL
EXDUP_BC
EXVVA_BC
Q1EX2
VPQ51
VPQ15
Q51_CL
Q15_CL
EXDUP_ES
EXVVA_ES
Q1EX3
&
&
&
≥1
1
Q1REL
Q1ITL

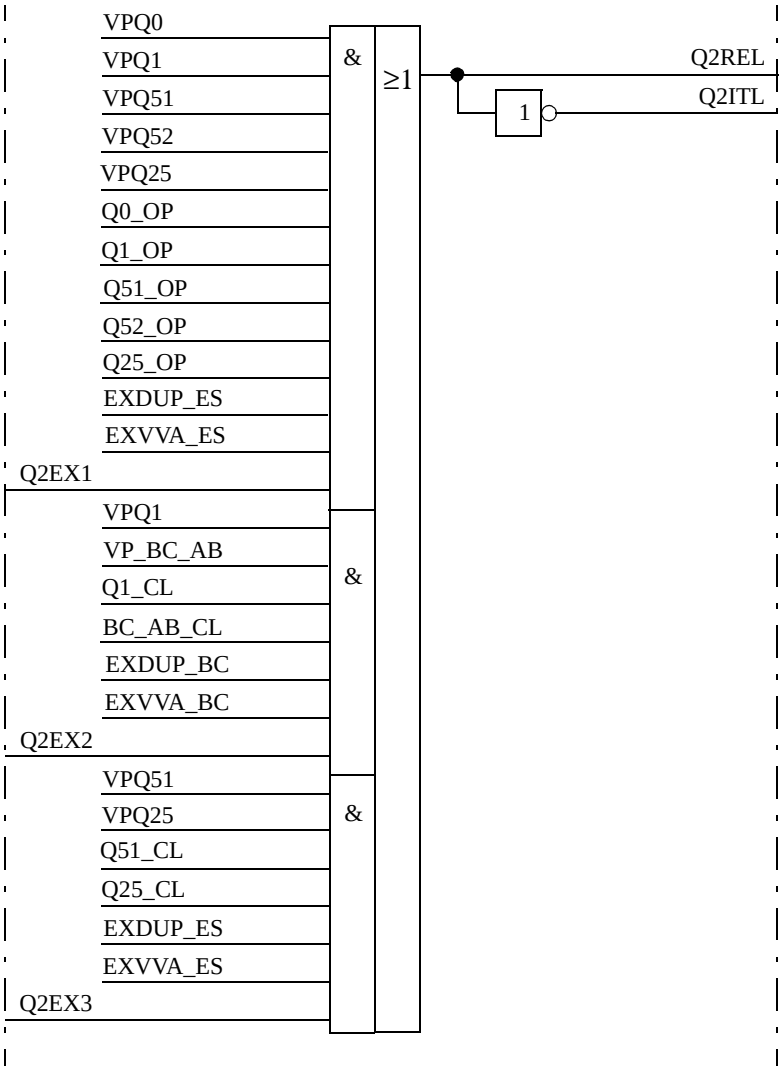
VPQ0
VPQ1
VPQ51
VPQ52
VPQ25
Q0_OP
Q1_OP
Q51_OP
Q52_OP
Q25_OP
EXDUP_ES
EXVVA_ES
Q2EX1
VPQ1
VP_BC_AB
Q1_CL
BC_AB_CL
EXDUP_BC
EXVVA_BC
Q2EX2
VPQ51
VPQ25
Q51_CL
Q25_CL
EXDUP_ES
EXVVA_ES
Q2EX3
&
&
&
≥1
1
Q2REL
Q2ITL

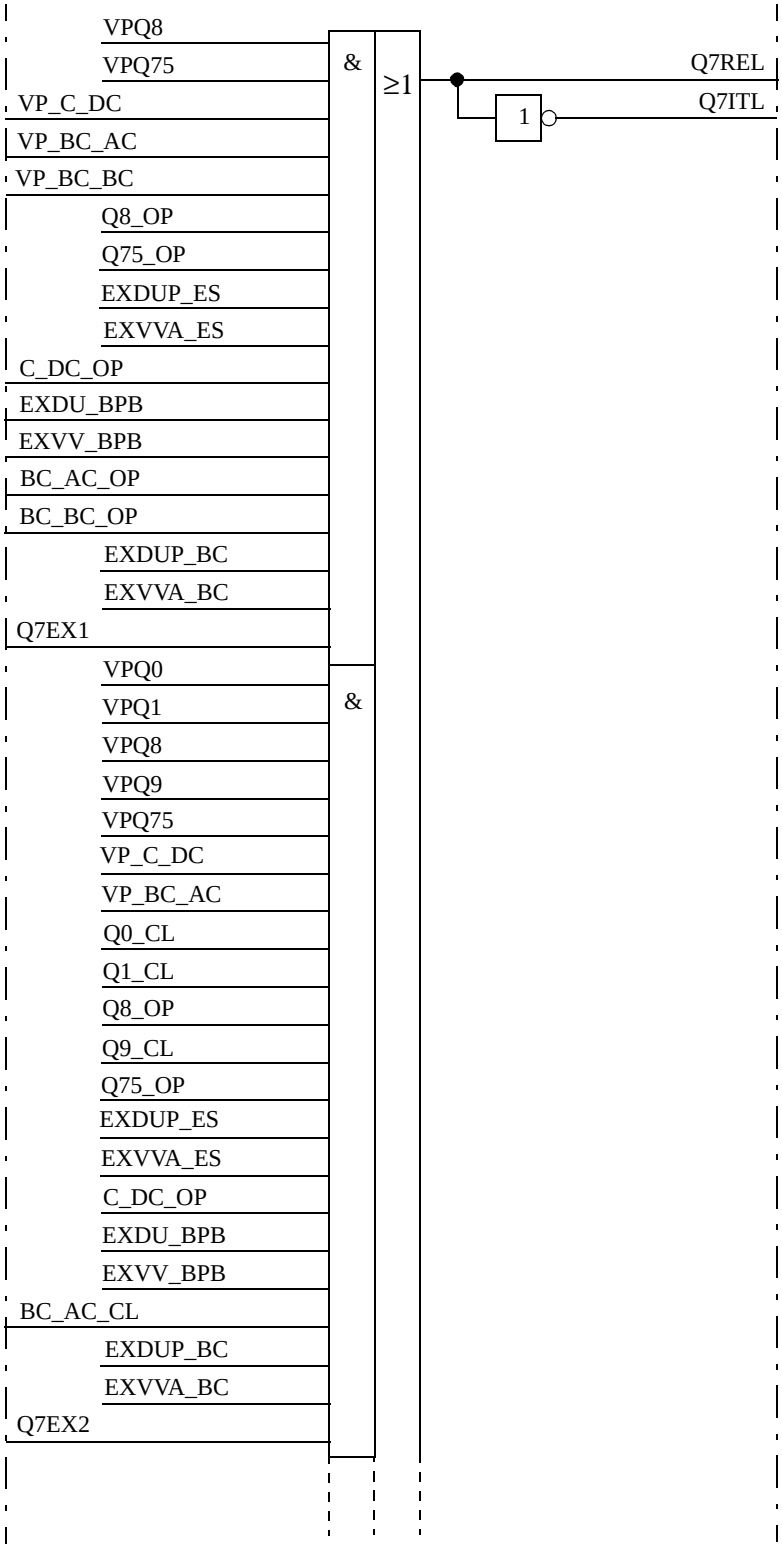
VPQ8
VPQ75
VP_C_DC
VP_BC_AC
VP_BC_BC
Q8_OP
Q75_OP
EXDUP_ES
EXVVA_ES
C_DC_OP
EXDU_BPB
EXVV_BPB
BC_AC_OP
BC_BC_OP
EXDUP_BC
EXVVA_BC
Q7EX1
&
VPQ0
VPQ1
VPQ8
VPQ9
VPQ75
VP_C_DC
VP_BC_AC
Q0_CL
Q1_CL
Q8_OP
Q9_CL
Q75_OP
EXDUP_ES
EXVVA_ES
C_DC_OP
EXDU_BPB
EXVV_BPB
BC_AC_CL
EXDUP_BC
EXVVA_BC
Q7EX2
&
≥1
1
Q7REL
Q7ITL

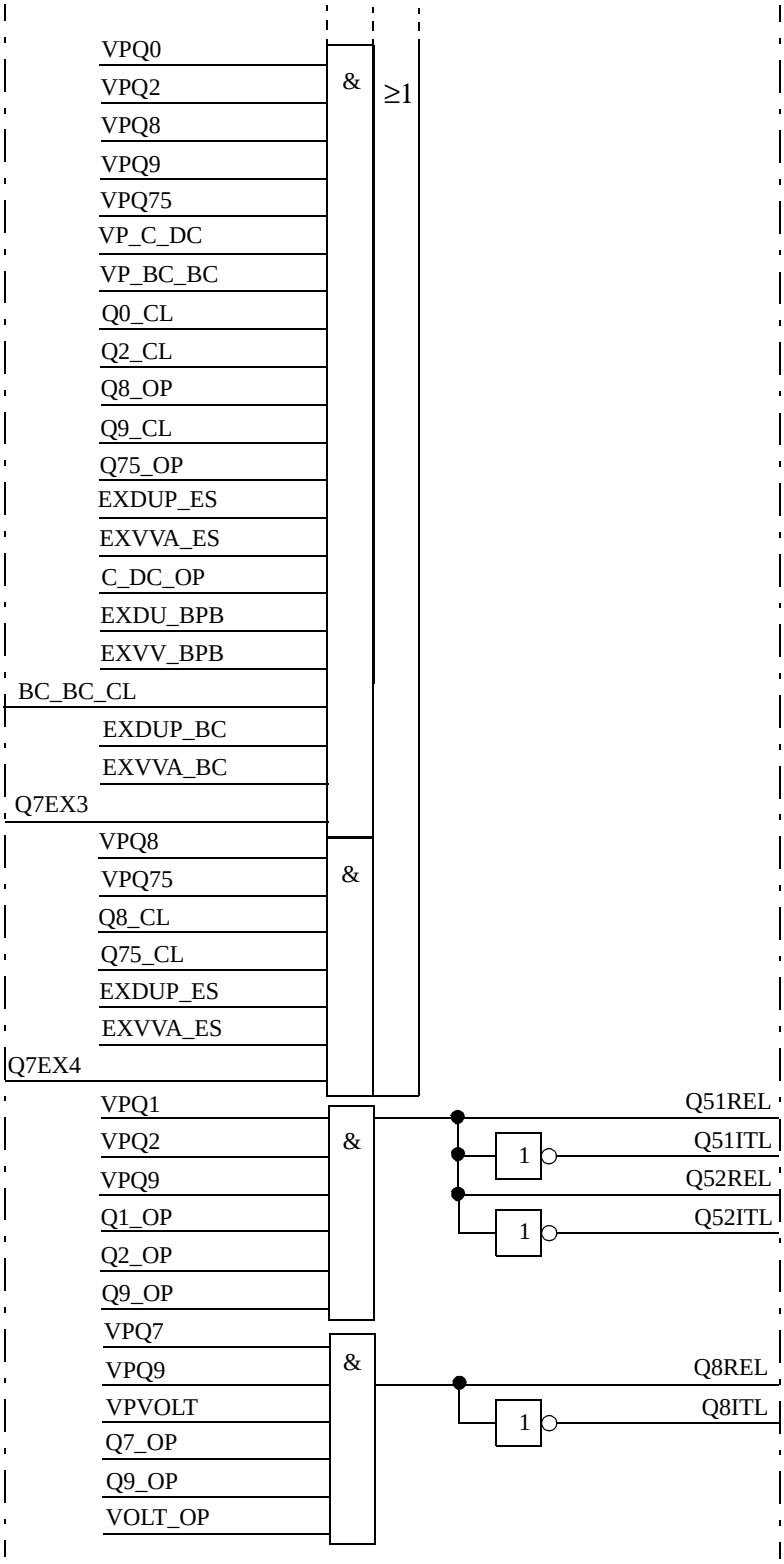
VPQ0
VPQ2
VPQ8
VPQ9
VPQ75
VP_C_DC
VP_BC_BC
Q0_CL
Q2_CL
Q8_OP
Q9_CL
Q75_OP
EXDUP_ES
EXVVA_ES
C_DC_OP
EXDU_BPB
EXVV_BPB
BC_BC_CL
EXDUP_BC
EXVVA_BC
Q7EX3
&
≥1
VPQ8
VPQ75
Q8_CL
Q75_CL
EXDUP_ES
EXVVA_ES
Q7EX4
&
VPQ1
VPQ2
VPQ9
Q1_OP
Q2_OP
Q9_OP
&
1
1
Q51REL
Q51ITL
Q52REL
Q52ITL
VPQ7
VPQ9
VPVOLT
Q7_OP
Q9_OP
VOLT_OP
&
1
Q8REL
Q8ITL

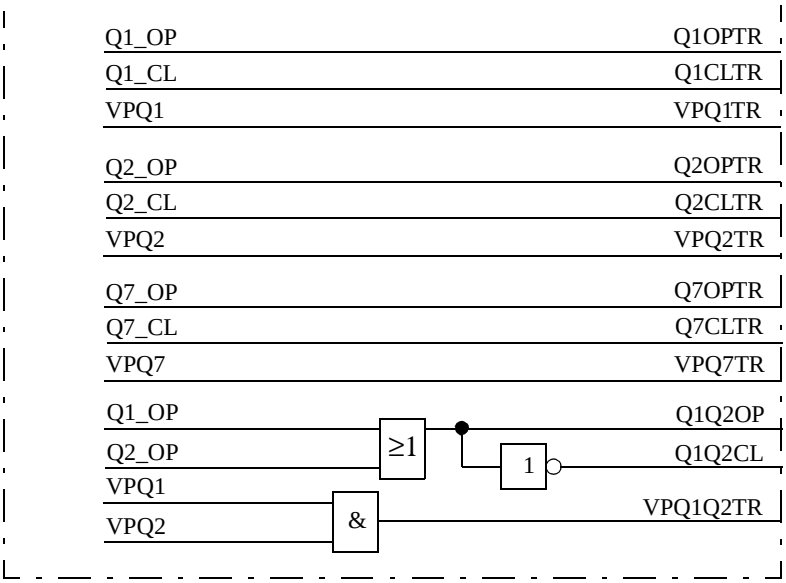

Figure 43: Function block diagram of ABC_LINE

6.1.2 ABC_BC

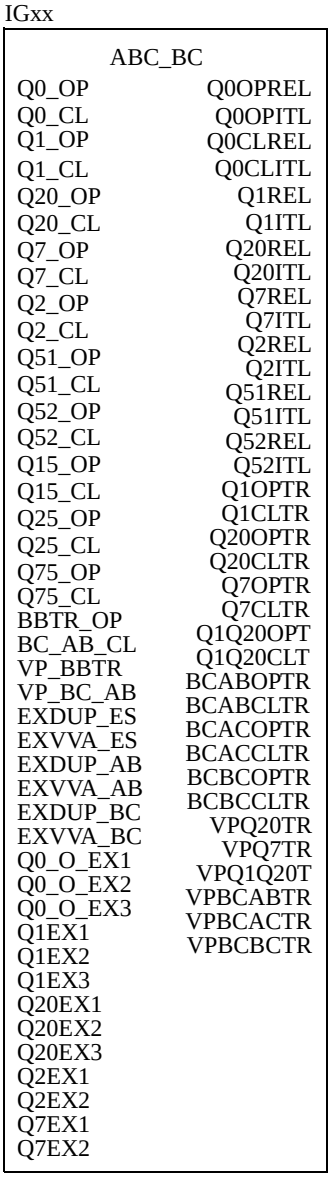

Figure 44: Function block ABC_BC

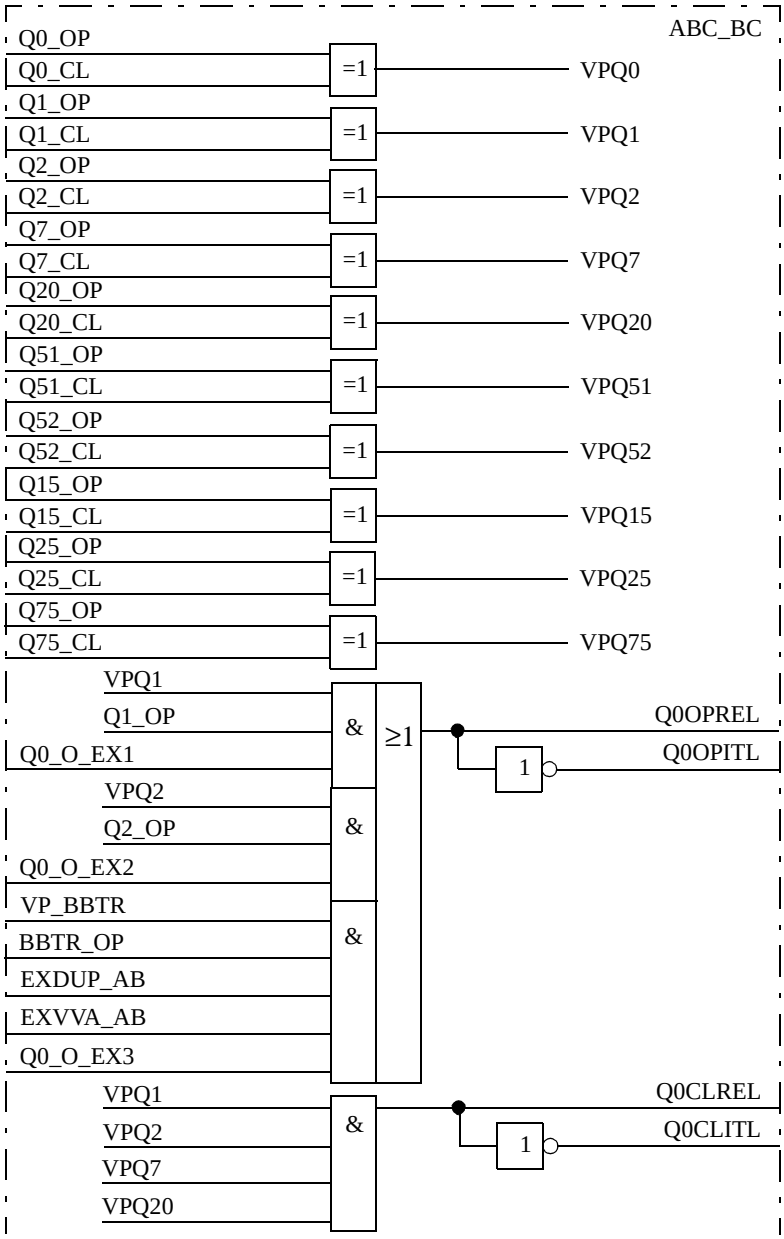
ABC_BC
Q0_OP
Q0_CL
Q1_OP
Q1_CL
Q2_OP
Q2_CL
Q7_OP
Q7_CL
Q20_OP
Q20_CL
Q51_OP
Q51_CL
Q52_OP
Q52_CL
Q15_OP
Q15_CL
Q25_OP
Q25_CL
Q75_OP
Q75_CL
=1
VPQ0
VPQ1
VPQ2
VPQ7
VPQ20
VPQ51
VPQ52
VPQ15
VPQ25
VPQ75
VPQ1
Q1_OP
Q0_O_EX1
VPQ2
Q2_OP
Q0_O_EX2
VP_BBTR
BBTR_OP
EXDUP_AB
EXVVA_AB
Q0_O_EX3
&
≥1
1
Q0OPREL
Q0OPITL
VPQ1
VPQ2
VPQ7
VPQ20
Q0CLREL
Q0CLITL

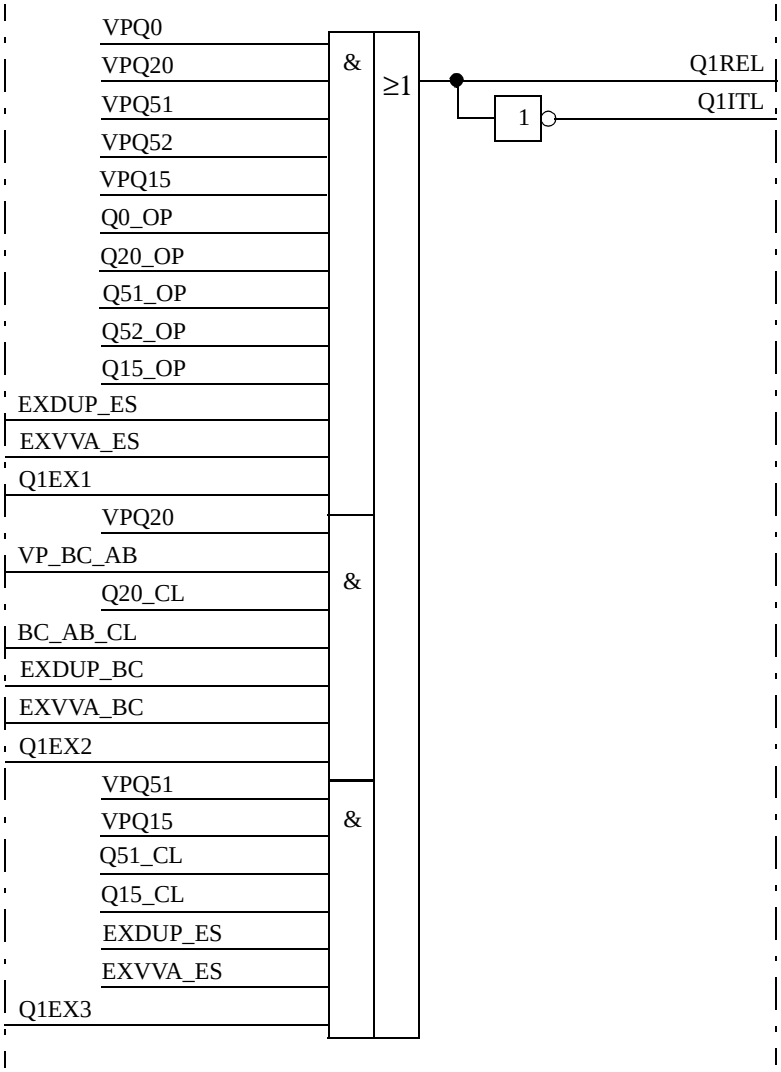
VPQ0
VPQ20
VPQ51
VPQ52
VPQ15
Q0_OP
Q20_OP
Q51_OP
Q52_OP
Q15_OP
EXDUP_ES
EXVVA_ES
Q1EX1
VPQ20
VP_BC_AB
Q20_CL
BC_AB_CL
EXDUP_BC
EXVVA_BC
Q1EX2
VPQ51
VPQ15
Q51_CL
Q15_CL
EXDUP_ES
EXVVA_ES
Q1EX3
&
&
&
≥1
1
Q1REL
Q1ITL

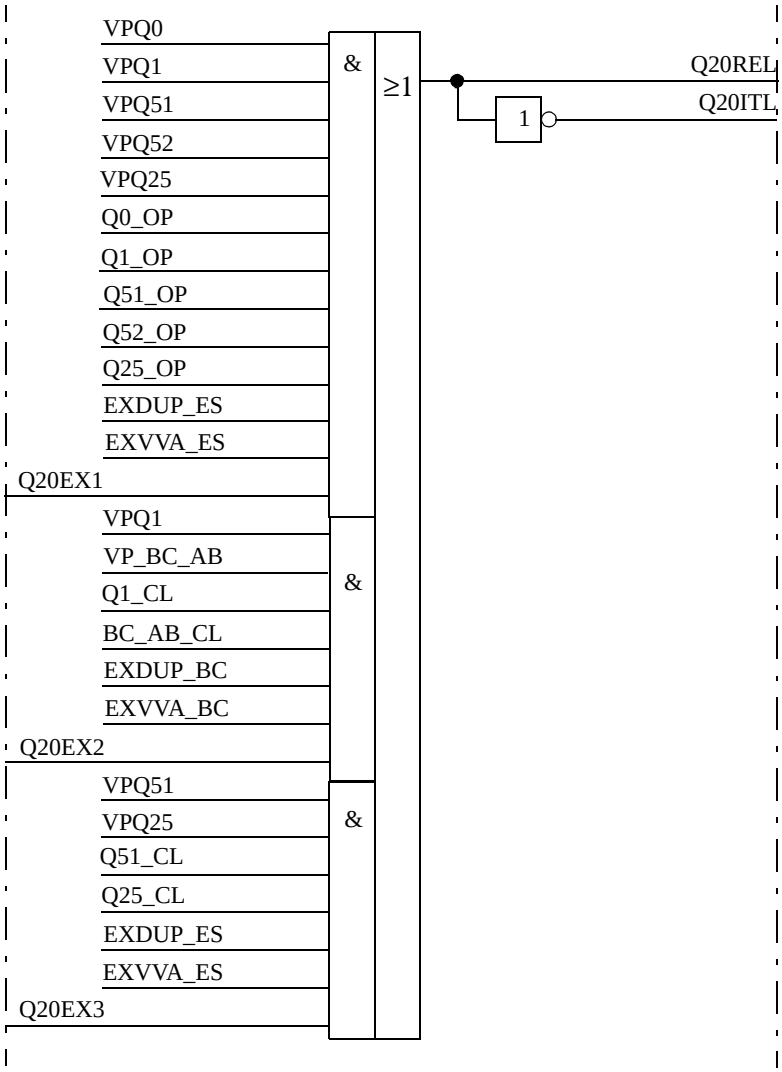
VPQ0
VPQ1
VPQ51
VPQ52
VPQ25
Q0_OP
Q1_OP
Q51_OP
Q52_OP
Q25_OP
EXDUP_ES
EXVVA_ES
Q20EX1
&
VPQ1
VP_BC_AB
Q1_CL
BC_AB_CL
EXDUP_BC
EXVVA_BC
Q20EX2
&
VPQ51
VPQ25
Q51_CL
Q25_CL
EXDUP_ES
EXVVA_ES
Q20EX3
&
≥1
1
Q20REL
Q20ITL

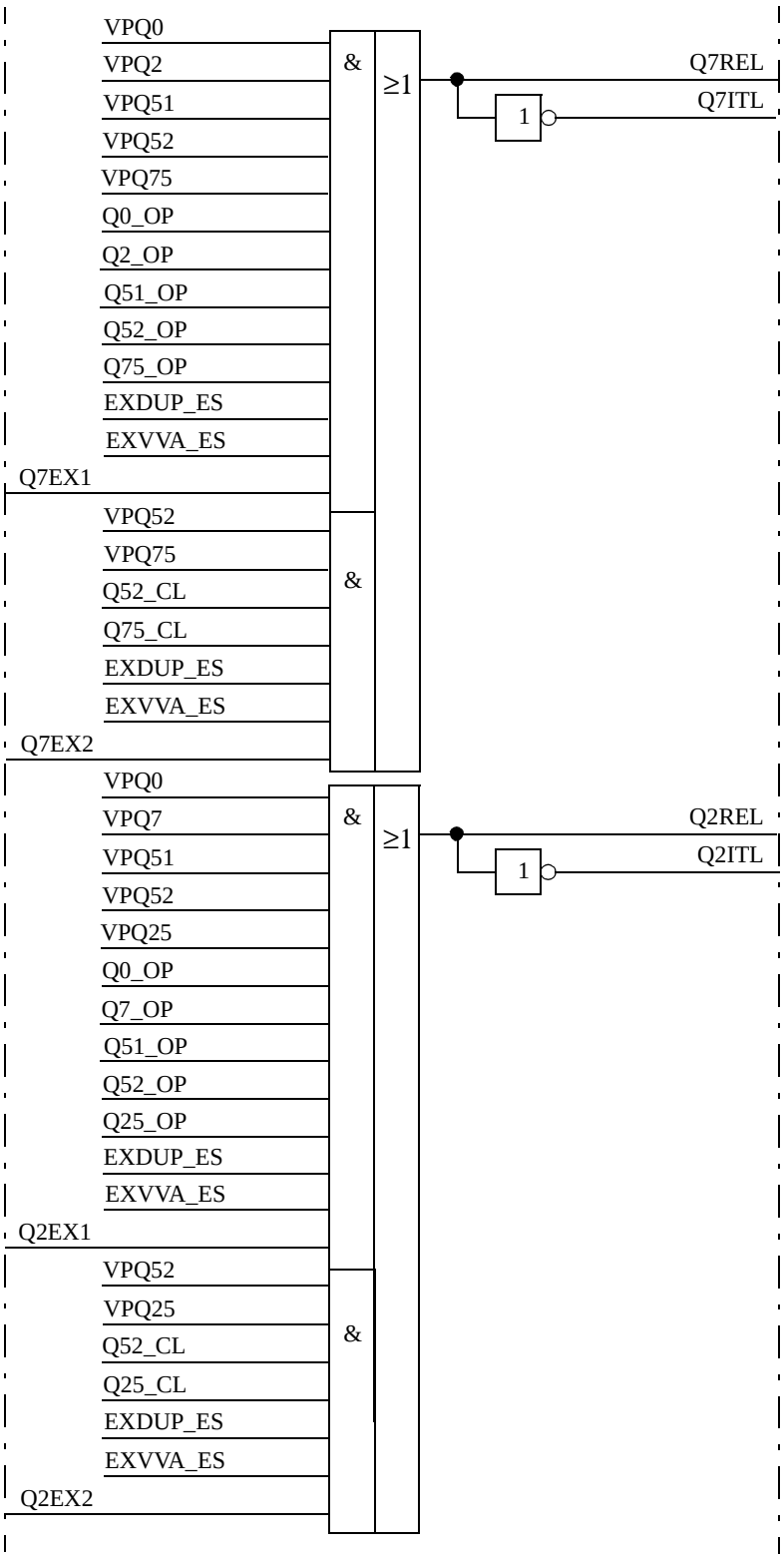
VPQ0
VPQ2
VPQ51
VPQ52
VPQ75
Q0_OP
Q2_OP
Q51_OP
Q52_OP
Q75_OP
EXDUP_ES
EXVVA_ES
Q7EX1
&
≥1
Q7REL
1
Q7ITL
VPQ52
VPQ75
Q52_CL
Q75_CL
EXDUP_ES
EXVVA_ES
Q7EX2
&
VPQ0
VPQ7
VPQ51
VPQ52
VPQ25
Q0_OP
Q7_OP
Q51_OP
Q52_OP
Q25_OP
EXDUP_ES
EXVVA_ES
Q2EX1
&
≥1
Q2REL
1
Q2ITL
VPQ52
VPQ25
Q52_CL
Q25_CL
EXDUP_ES
EXVVA_ES
Q2EX2
&

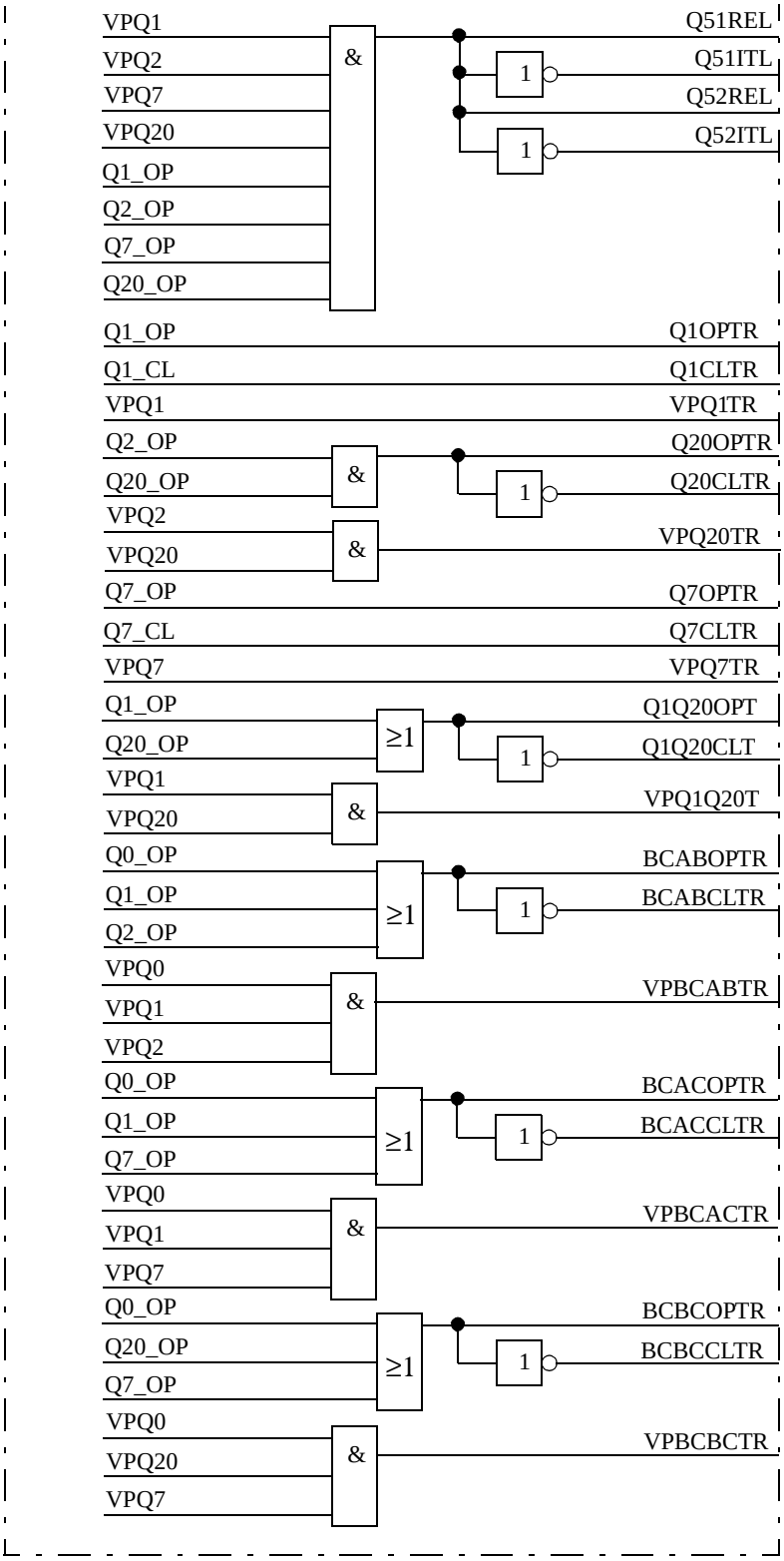

Figure 45: Function block diagram of ABC_BC

6.1.3 AB_TRAFO

IExx

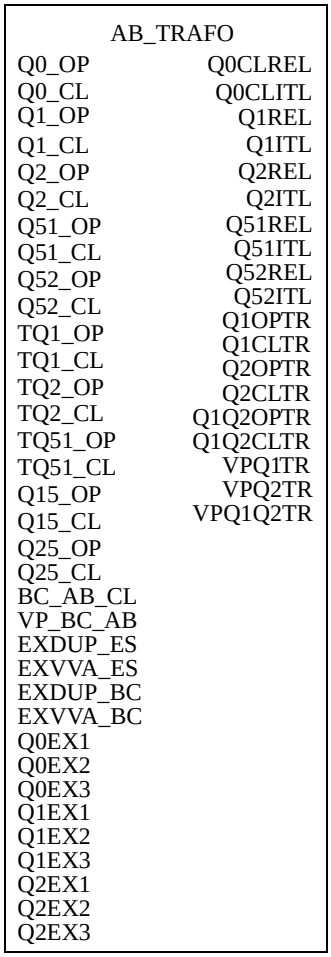

Figure 46: Function block AB_TRAFO

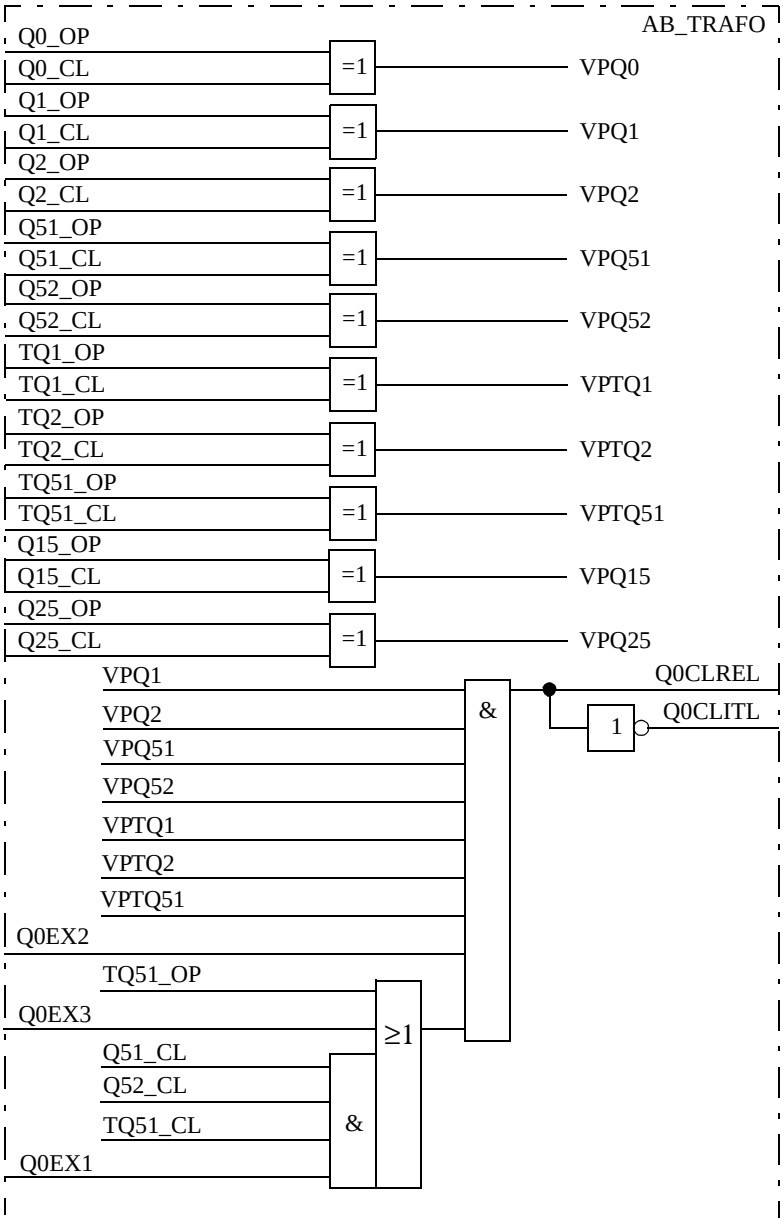
AB_TRAFO
Q0_OP
Q0_CL
Q1_OP
Q1_CL
Q2_OP
Q2_CL
Q51_OP
Q51_CL
Q52_OP
Q52_CL
TQ1_OP
TQ1_CL
TQ2_OP
TQ2_CL
TQ51_OP
TQ51_CL
Q15_OP
Q15_CL
Q25_OP
Q25_CL
=1
VPQ0
VPQ1
VPQ2
VPQ51
VPQ52
VPTQ1
VPTQ2
VPTQ51
VPQ15
VPQ25
VPQ1
VPQ2
VPQ51
VPQ52
VPTQ1
VPTQ2
VPTQ51
Q0EX2
TQ51_OP
Q0EX3
Q51_CL
Q52_CL
TQ51_CL
Q0EX1
&
≥1
Q0CLREL
1
Q0CLITL

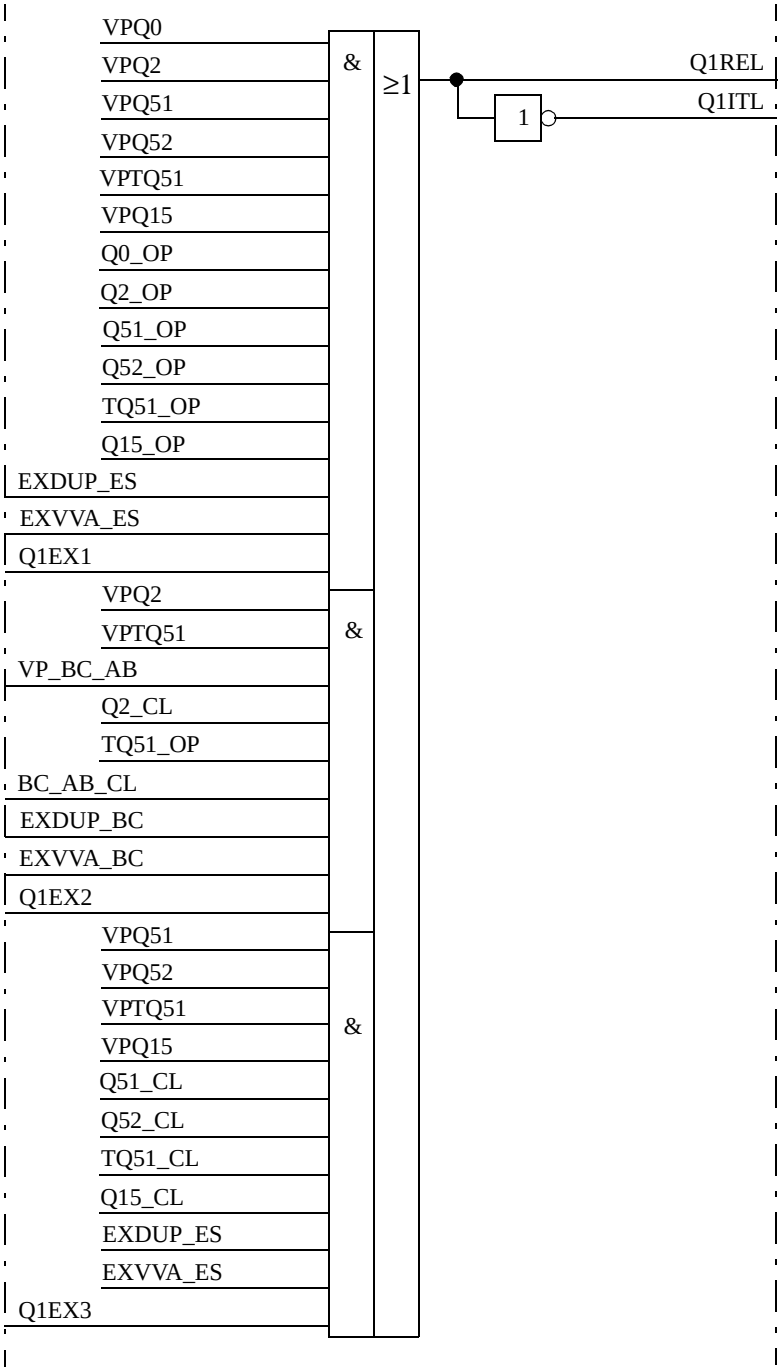
VPQ0
VPQ2
VPQ51
VPQ52
VPTQ51
VPQ15
Q0_OP
Q2_OP
Q51_OP
Q52_OP
TQ51_OP
Q15_OP
EXDUP_ES
EXVVA_ES
Q1EX1
VPQ2
VPTQ51
VP_BC_AB
Q2_CL
TQ51_OP
BC_AB_CL
EXDUP_BC
EXVVA_BC
Q1EX2
VPQ51
VPQ52
VPTQ51
VPQ15
Q51_CL
Q52_CL
TQ51_CL
Q15_CL
EXDUP_ES
EXVVA_ES
Q1EX3
&
&
&
≥1
1
Q1REL
Q1ITL

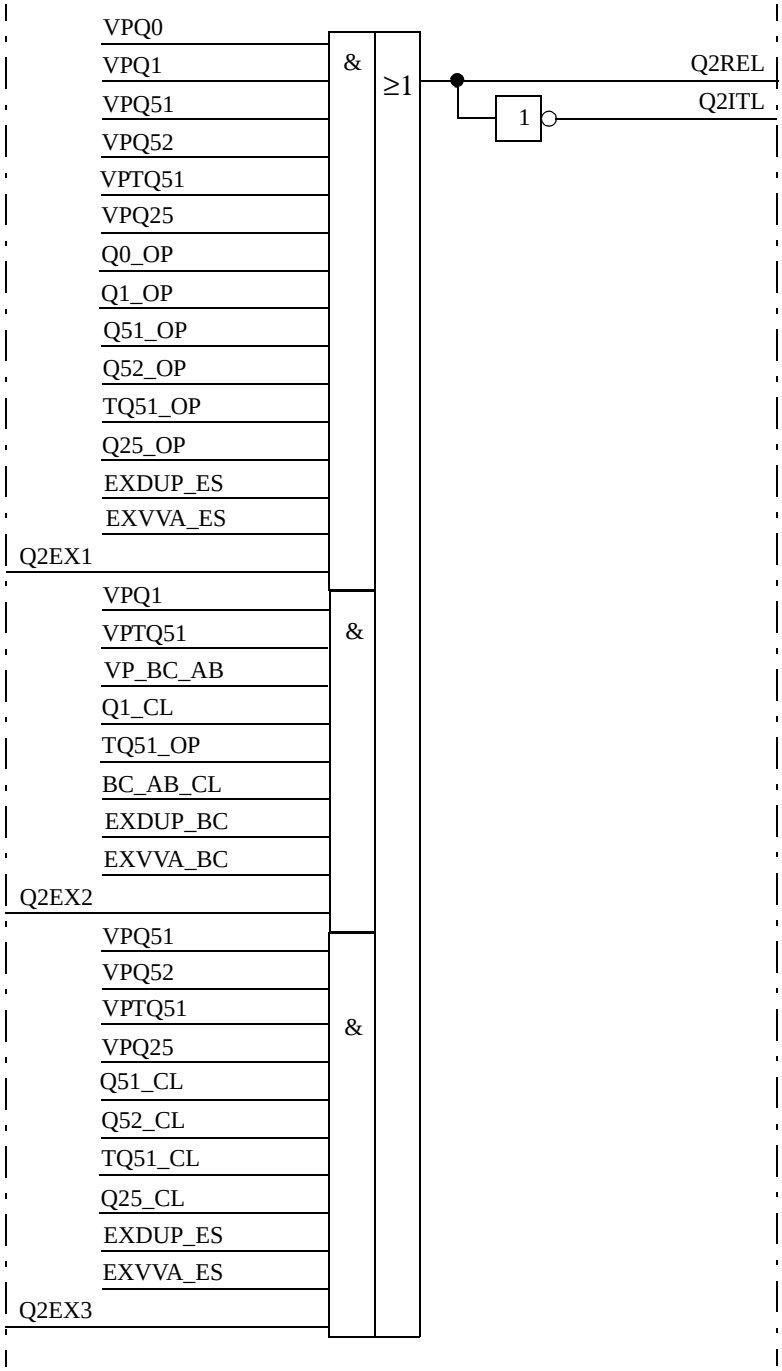
VPQ0
VPQ1
VPQ51
VPQ52
VPTQ51
VPQ25
Q0_OP
Q1_OP
Q51_OP
Q52_OP
TQ51_OP
Q25_OP
EXDUP_ES
EXVVA_ES
Q2EX1
&
VPQ1
VPTQ51
VP_BC_AB
Q1_CL
TQ51_OP
BC_AB_CL
EXDUP_BC
EXVVA_BC
Q2EX2
&
VPQ51
VPQ52
VPTQ51
VPQ25
Q51_CL
Q52_CL
TQ51_CL
Q25_CL
EXDUP_ES
EXVVA_ES
Q2EX3
&
≥1
1
Q2REL
Q2ITL

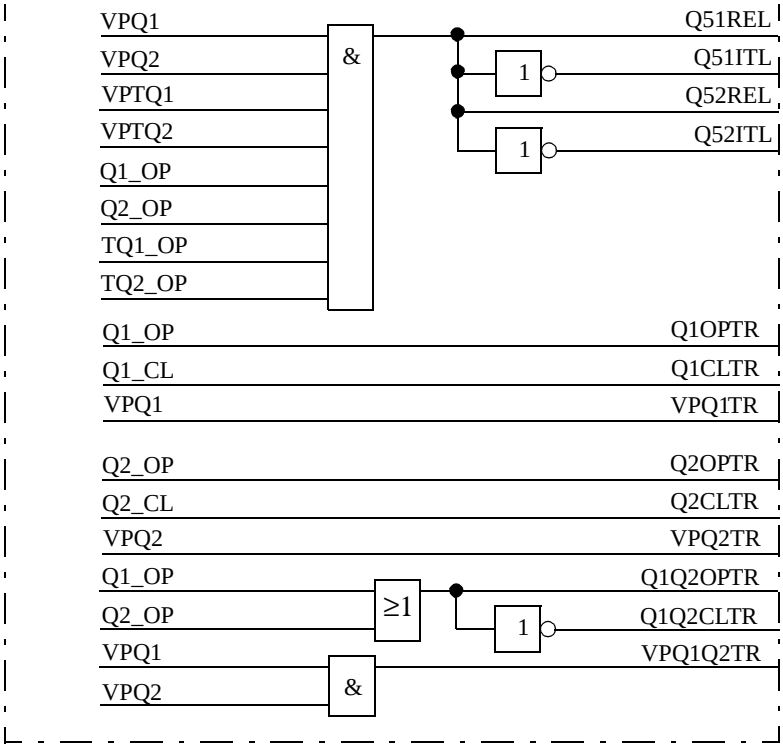

Figure 47: Function block diagram of AB_TRAFO

6.1.4 A1A2_BS

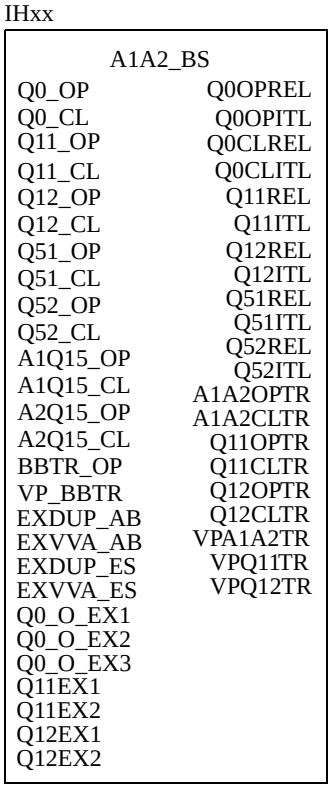

Figure 48: Function block A1A2_BS

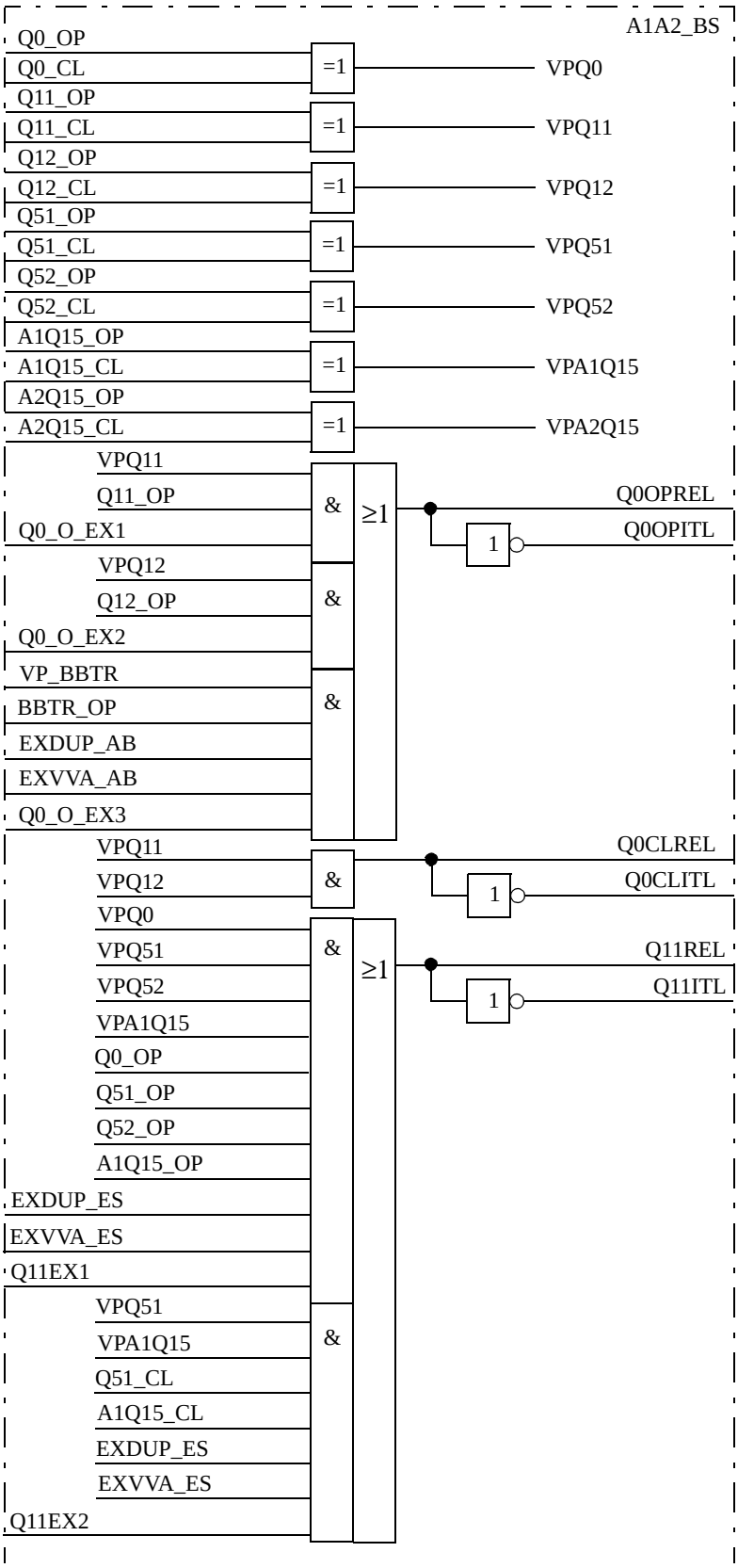
A1A2_BS
Q0_OP
Q0_CL
Q11_OP
Q11_CL
Q12_OP
Q12_CL
Q51_OP
Q51_CL
Q52_OP
Q52_CL
A1Q15_OP
A1Q15_CL
A2Q15_OP
A2Q15_CL
=1
VPQ0
VPQ11
VPQ12
VPQ51
VPQ52
VPA1Q15
VPA2Q15
VPQ11
Q11_OP
Q0_O_EX1
VPQ12
Q12_OP
Q0_O_EX2
VP_BBTR
BBTR_OP
EXDUP_AB
EXVVA_AB
Q0_O_EX3
&
≥1
1
Q0OPREL
Q0OPITL
VPQ11
VPQ12
VPQ0
VPQ51
VPQ52
VPA1Q15
Q0_OP
Q51_OP
Q52_OP
A1Q15_OP
EXDUP_ES
EXVVA_ES
Q11EX1
Q0CLREL
Q0CLITL
Q11REL
Q11ITL
VPQ51
VPA1Q15
Q51_CL
A1Q15_CL
EXDUP_ES
EXVVA_ES
Q11EX2

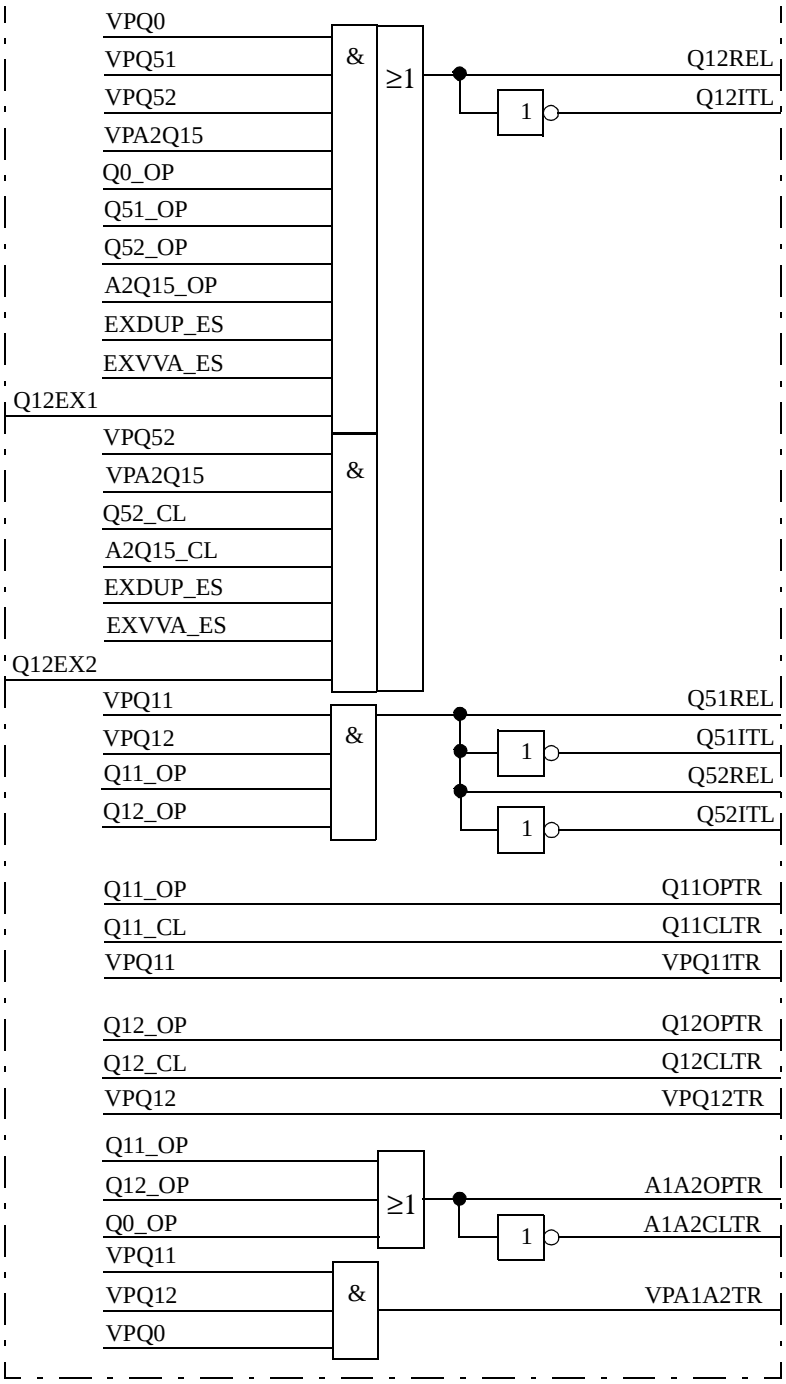

Figure 49: Function block diagram of A1A2_BS

6.1.5 A1A2_DC

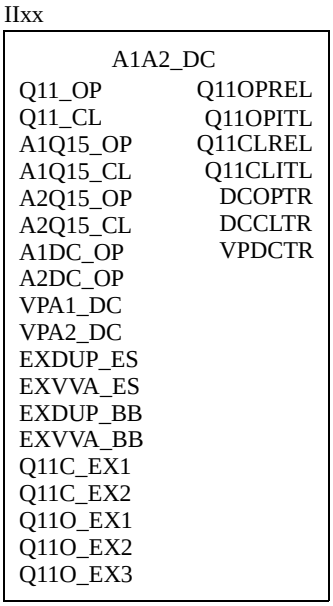

Figure 50: Function block A1A2_DC

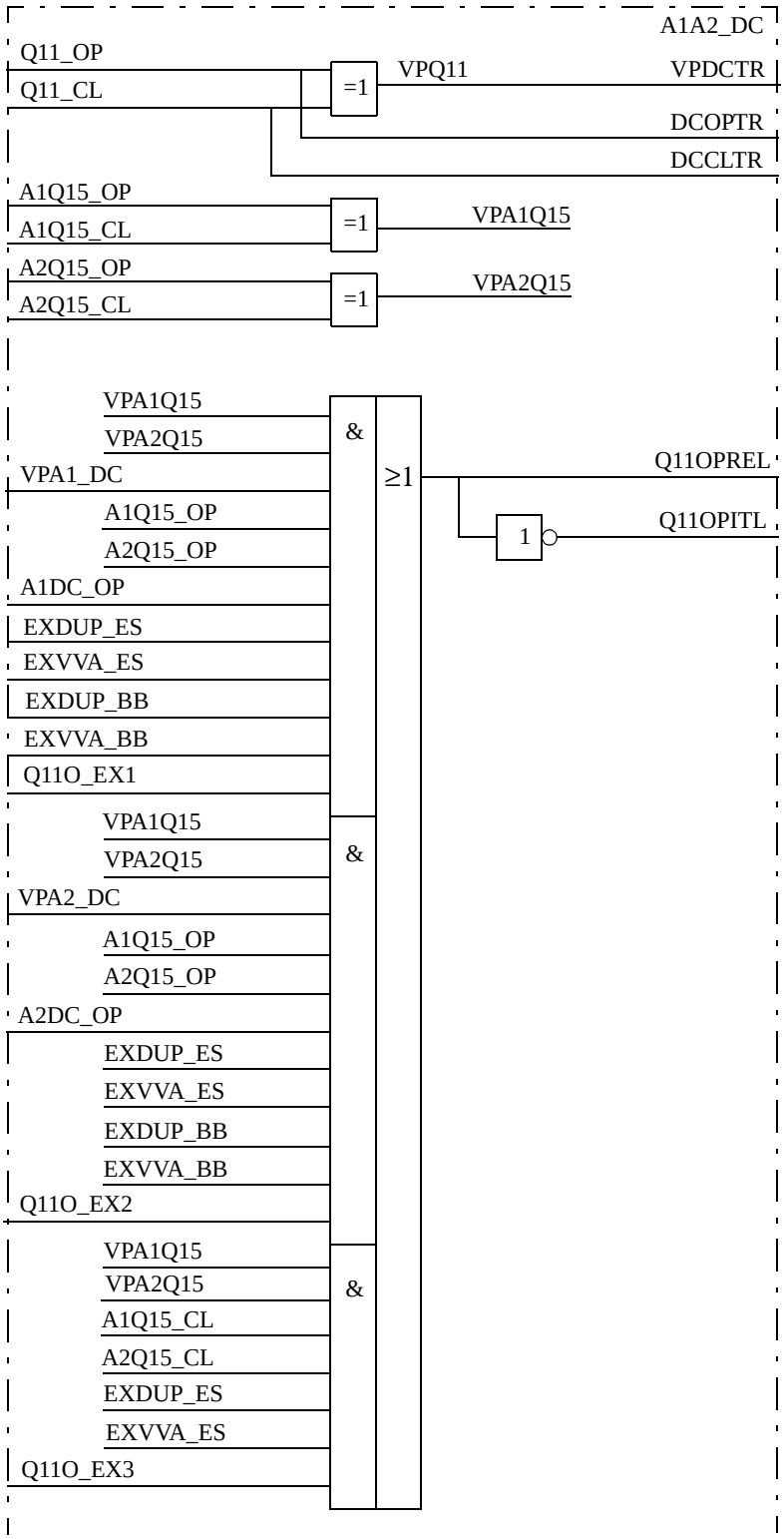
A1A2_DC
Q11_OP
Q11_CL
=1
VPQ11
VPDCTR
DCOPTR
DCCLTR
A1Q15_OP
A1Q15_CL
=1
VPA1Q15
A2Q15_OP
A2Q15_CL
=1
VPA2Q15
VPA1Q15
VPA2Q15
VPA1_DC
A1Q15_OP
A2Q15_OP
A1DC_OP
EXDUP_ES
EXVVA_ES
EXDUP_BB
EXVVA_BB
Q11O_EX1
&
≥1
Q11OPREL
1
Q11OPITL
VPA1Q15
VPA2Q15
VPA2_DC
A1Q15_OP
A2Q15_OP
A2DC_OP
EXDUP_ES
EXVVA_ES
EXDUP_BB
EXVVA_BB
Q11O_EX2
&
VPA1Q15
VPA2Q15
A1Q15_CL
A2Q15_CL
EXDUP_ES
EXVVA_ES
Q11O_EX3
&

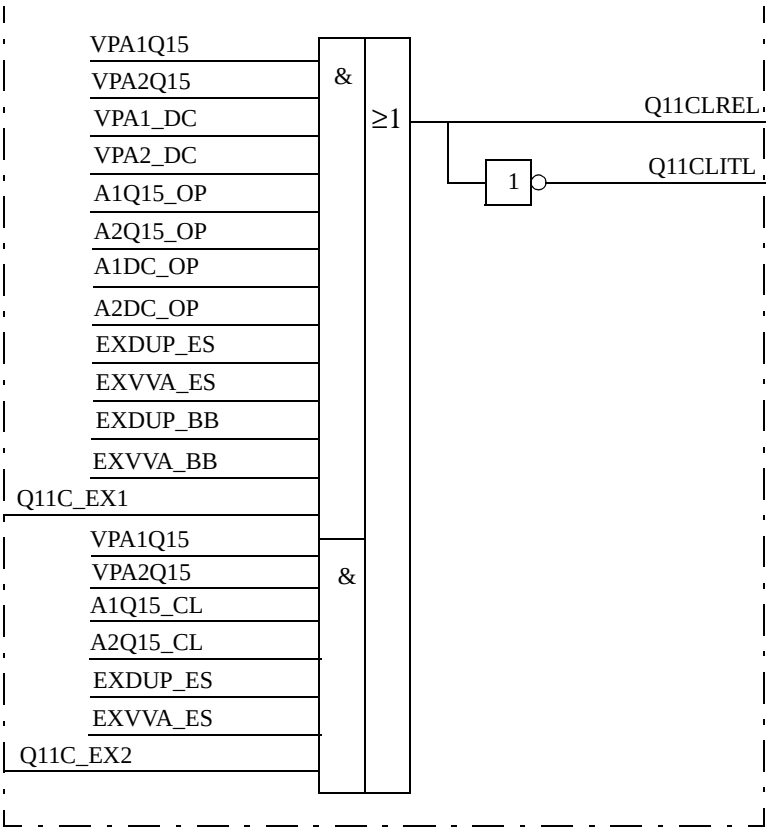

Figure 51: Function block diagram of A1A2_DC

6.1.6 BB_ES

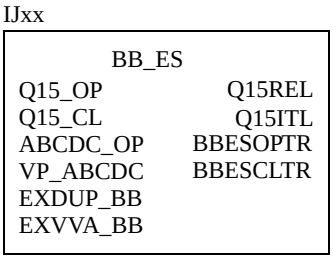

Figure 52: Function block BB_ES

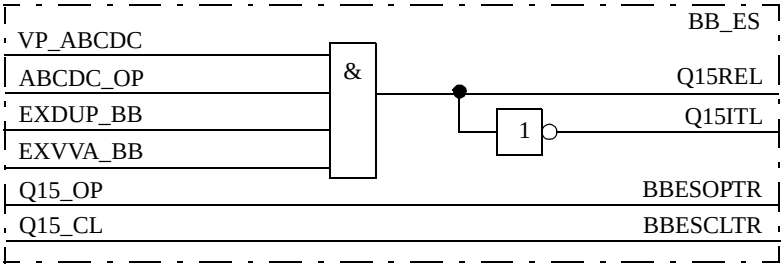

Figure 53: Function block diagram of BB_ES

6.1.7 DB_BUS_A

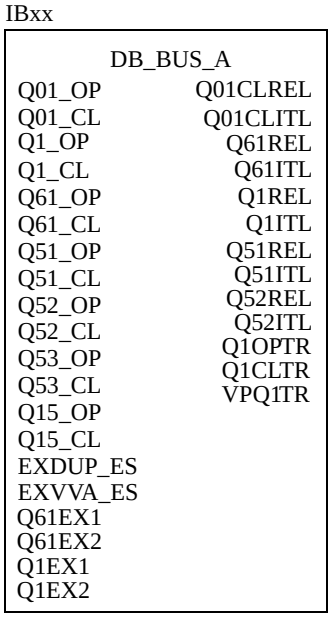

Figure 54: Function block DB_BUS_A

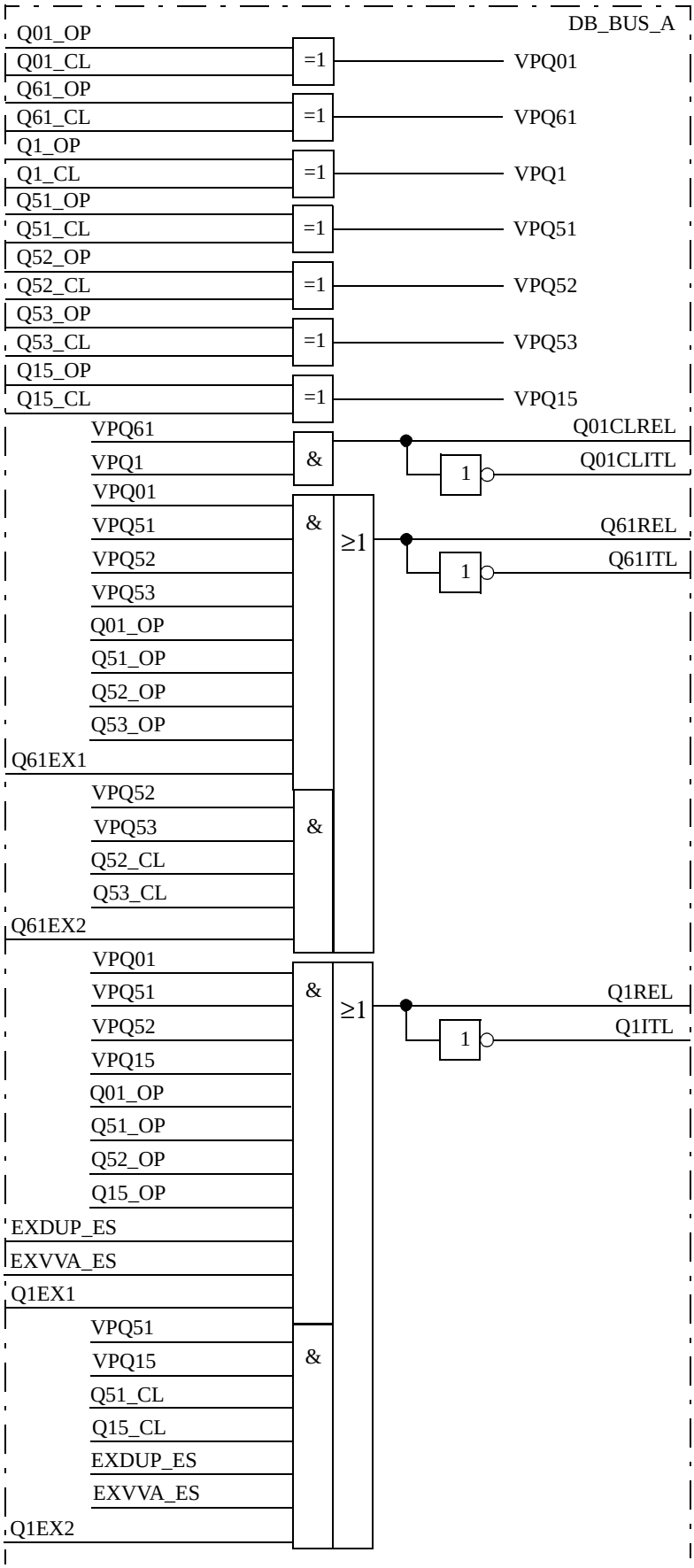
DB_BUS_A
Q01_OP
Q01_CL
Q61_OP
Q61_CL
Q1_OP
Q1_CL
Q51_OP
Q51_CL
Q52_OP
Q52_CL
Q53_OP
Q53_CL
Q15_OP
Q15_CL
=1
VPQ01
VPQ61
VPQ1
VPQ51
VPQ52
VPQ53
VPQ15
VPQ61
VPQ1
VPQ01
VPQ51
VPQ52
VPQ53
Q01_OP
Q51_OP
Q52_OP
Q53_OP
Q61EX1
&
Q01CLREL
Q01CLITL
1
≥1
Q61REL
Q61ITL
VPQ52
VPQ53
Q52_CL
Q53_CL
Q61EX2
VPQ01
VPQ51
VPQ52
VPQ15
Q01_OP
Q51_OP
Q52_OP
Q15_OP
EXDUP_ES
EXVVA_ES
Q1EX1
Q1REL
Q1ITL
VPQ51
VPQ15
Q51_CL
Q15_CL
EXDUP_ES
EXVVA_ES
Q1EX2

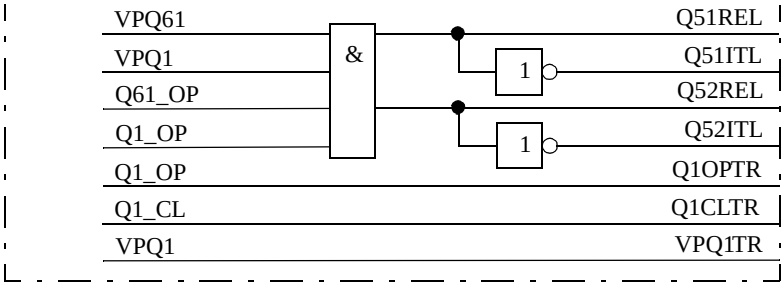

Figure 55: Function block diagram of DB_BUS_A

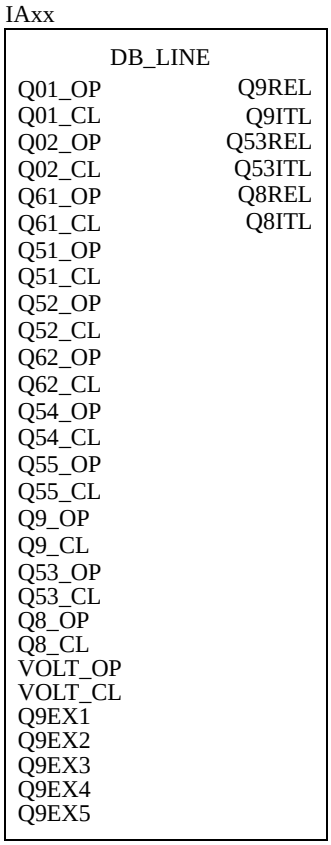

Figure 56: Function block DB_LINE

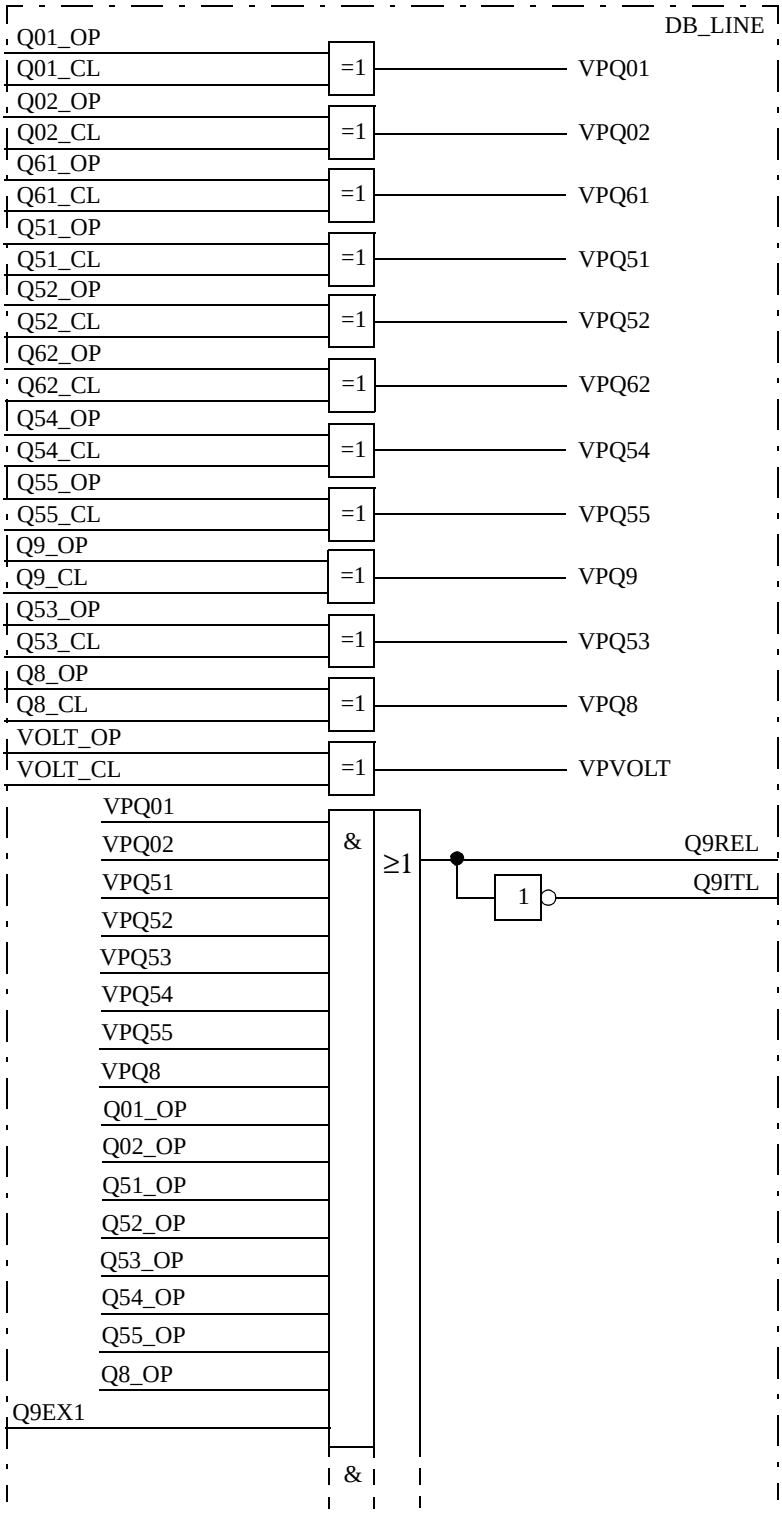
DB_LINE
Q01_OP
Q01_CL
Q02_OP
Q02_CL
Q61_OP
Q61_CL
Q51_OP
Q51_CL
Q52_OP
Q52_CL
Q62_OP
Q62_CL
Q54_OP
Q54_CL
Q55_OP
Q55_CL
Q9_OP
Q9_CL
Q53_OP
Q53_CL
Q8_OP
Q8_CL
VOLT_OP
VOLT_CL
=1
VPQ01
VPQ02
VPQ61
VPQ51
VPQ52
VPQ62
VPQ54
VPQ55
VPQ9
VPQ53
VPQ8
VPVOLT
VPQ01
VPQ02
VPQ51
VPQ52
VPQ53
VPQ54
VPQ55
VPQ8
Q01_OP
Q02_OP
Q51_OP
Q52_OP
Q53_OP
Q54_OP
Q55_OP
Q8_OP
Q9EX1
&
≥1
1
Q9REL
Q9ITL
&

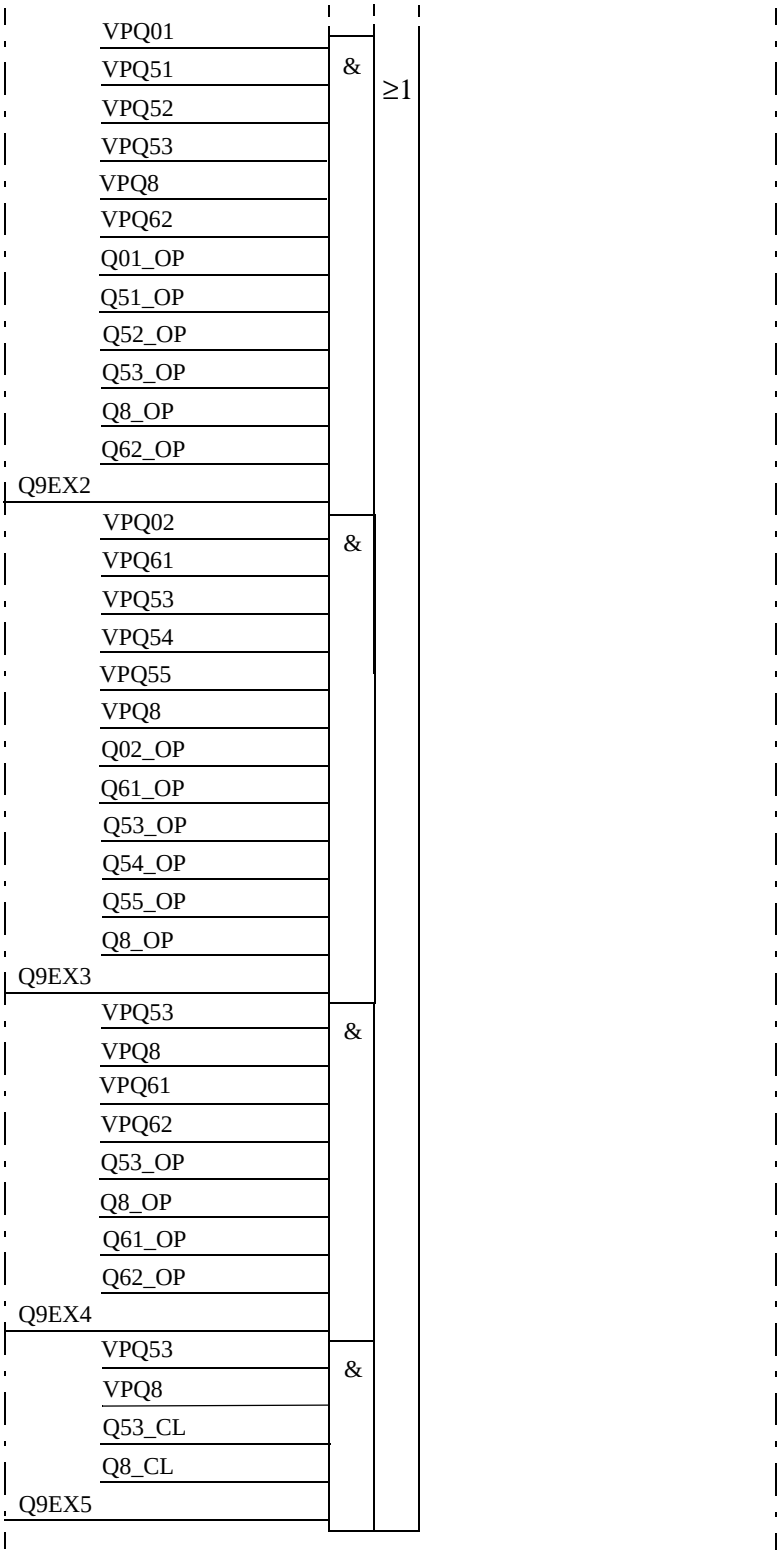
VPQ01
VPQ51
VPQ52
VPQ53
VPQ8
VPQ62
Q01_OP
Q51_OP
Q52_OP
Q53_OP
Q8_OP
Q62_OP
Q9EX2
&
VPQ02
VPQ61
VPQ53
VPQ54
VPQ55
VPQ8
Q02_OP
Q61_OP
Q53_OP
Q54_OP
Q55_OP
Q8_OP
Q9EX3
&
VPQ53
VPQ8
VPQ61
VPQ62
Q53_OP
Q8_OP
Q61_OP
Q62_OP
Q9EX4
&
VPQ53
VPQ8
Q53_CL
Q8_CL
Q9EX5
&
≥1

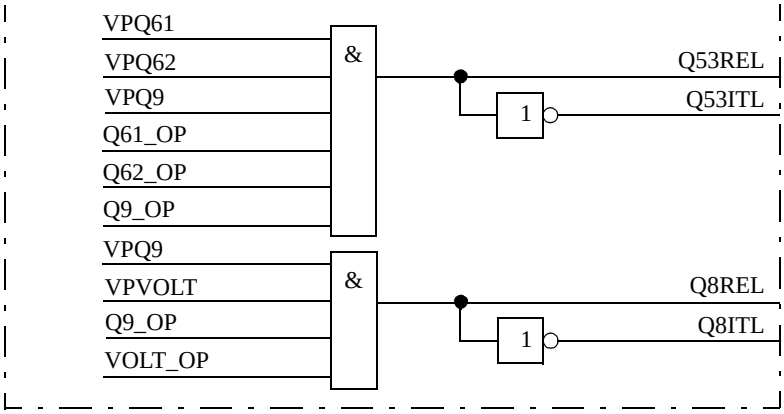

Figure 57: Function block diagram of DB_LINE

6.1.8 DB_BUS_B

ICxx

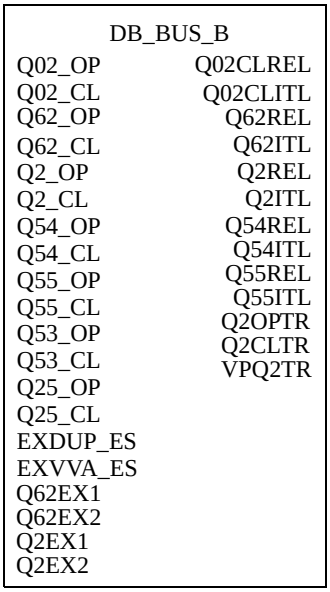

Figure 58: Function block DB_BUS_B

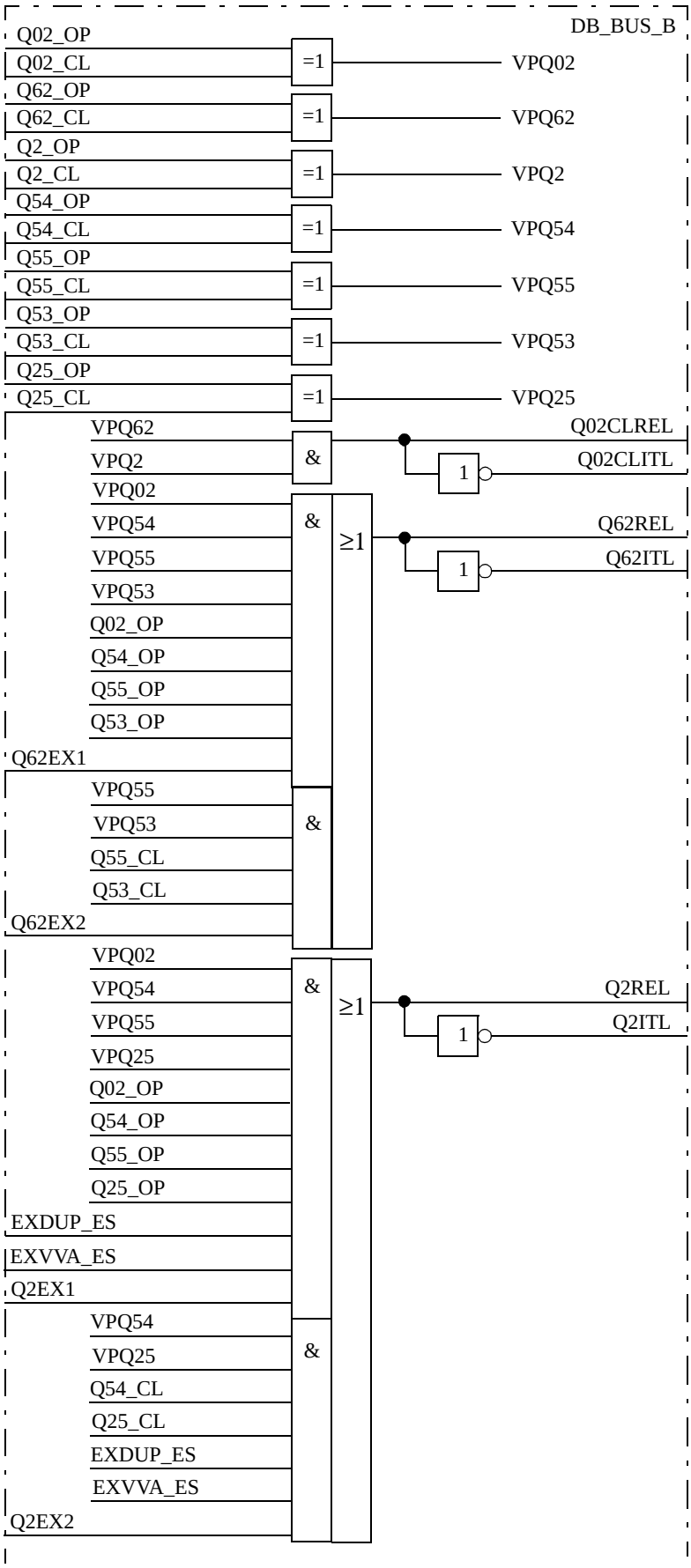
DB_BUS_B
Q02_OP
Q02_CL
Q62_OP
Q62_CL
Q2_OP
Q2_CL
Q54_OP
Q54_CL
Q55_OP
Q55_CL
Q53_OP
Q53_CL
Q25_OP
Q25_CL
=1
VPQ02
VPQ62
VPQ2
VPQ54
VPQ55
VPQ53
VPQ25
VPQ62
VPQ2
&
Q02CLREL
1
Q02CLITL
VPQ02
VPQ54
VPQ55
VPQ53
Q02_OP
Q54_OP
Q55_OP
Q53_OP
Q62EX1
&
≥1
Q62REL
1
Q62ITL
VPQ55
VPQ53
Q55_CL
Q53_CL
Q62EX2
&
VPQ02
VPQ54
VPQ55
VPQ25
Q02_OP
Q54_OP
Q55_OP
Q25_OP
EXDUP_ES
EXVVA_ES
Q2EX1
&
≥1
Q2REL
1
Q2ITL
VPQ54
VPQ25
Q54_CL
Q25_CL
EXDUP_ES
EXVVA_ES
Q2EX2

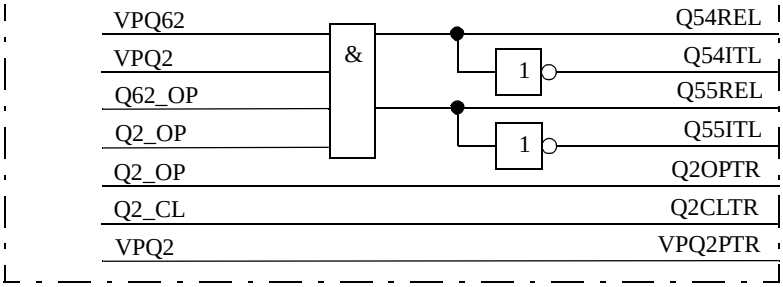

Figure 59: Function block diagram of DB_BUS_B

6.1.9 BH_LINE_A

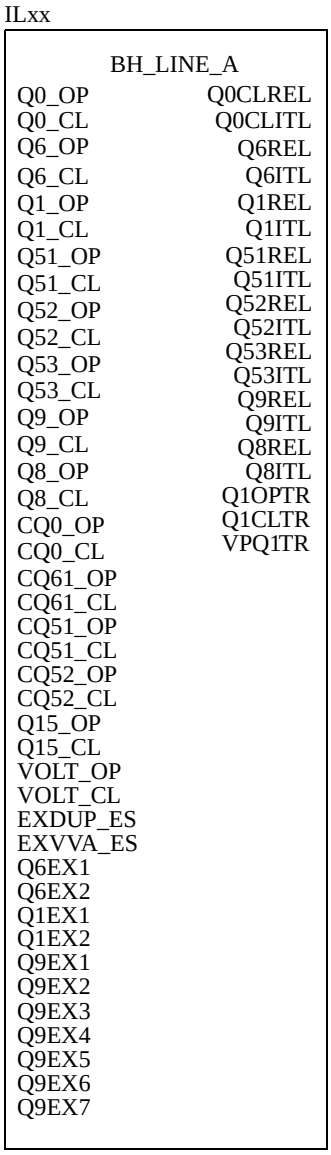

Figure 60: Function block BH_LINE_A

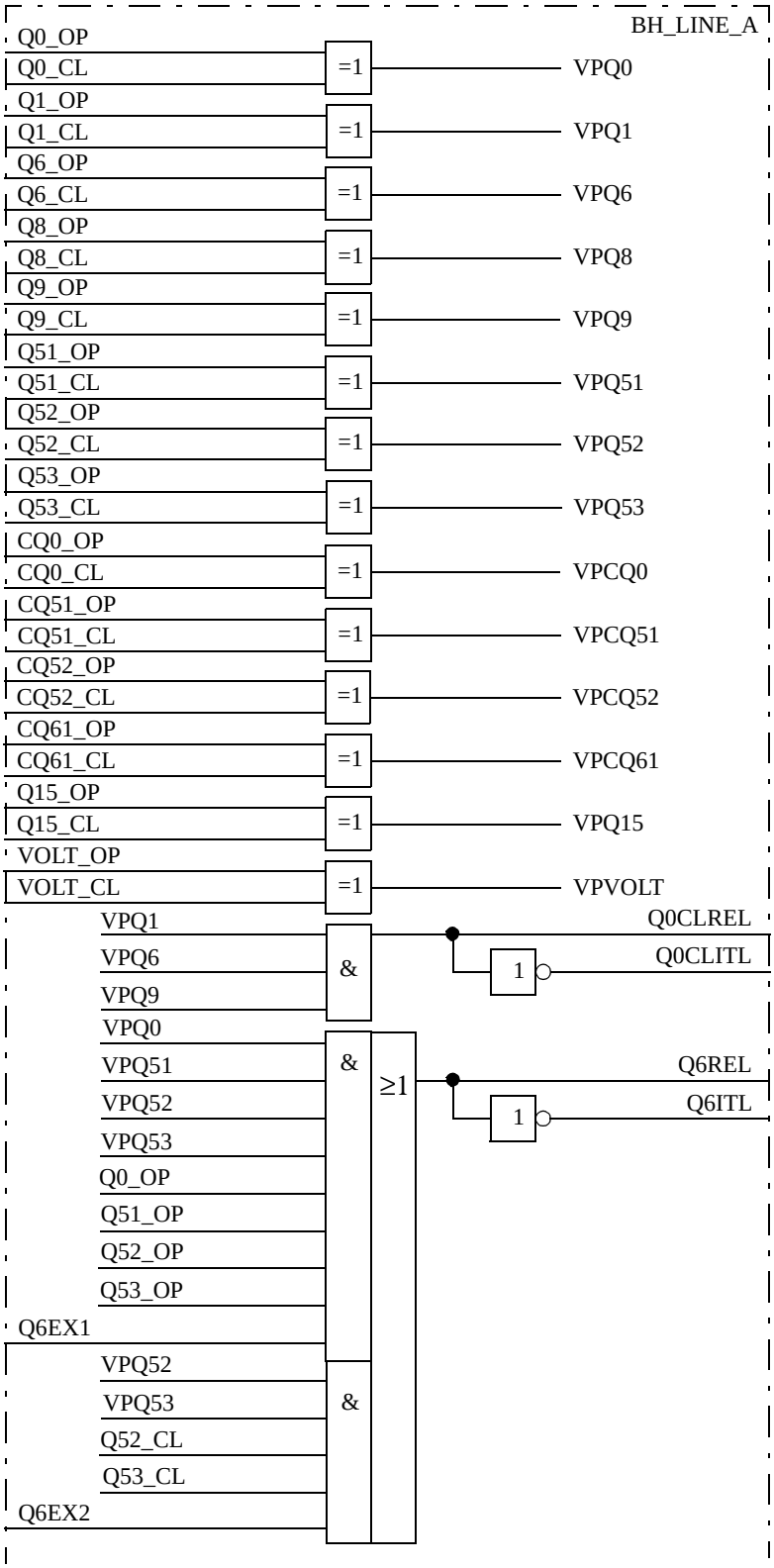
BH_LINE_A
Q0_OP
Q0_CL
Q1_OP
Q1_CL
Q6_OP
Q6_CL
Q8_OP
Q8_CL
Q9_OP
Q9_CL
Q51_OP
Q51_CL
Q52_OP
Q52_CL
Q53_OP
Q53_CL
CQ0_OP
CQ0_CL
CQ51_OP
CQ51_CL
CQ52_OP
CQ52_CL
CQ61_OP
CQ61_CL
Q15_OP
Q15_CL
VOLT_OP
VOLT_CL
=1
VPQ0
VPQ1
VPQ6
VPQ8
VPQ9
VPQ51
VPQ52
VPQ53
VPCQ0
VPCQ51
VPCQ52
VPCQ61
VPQ15
VPVOLT
VPQ1
VPQ6
VPQ9
&
Q0CLREL
1
Q0CLITL
VPQ0
VPQ51
VPQ52
VPQ53
Q0_OP
Q51_OP
Q52_OP
Q53_OP
Q6EX1
&
≥1
Q6REL
1
Q6ITL
VPQ52
VPQ53
Q52_CL
Q53_CL
Q6EX2
&

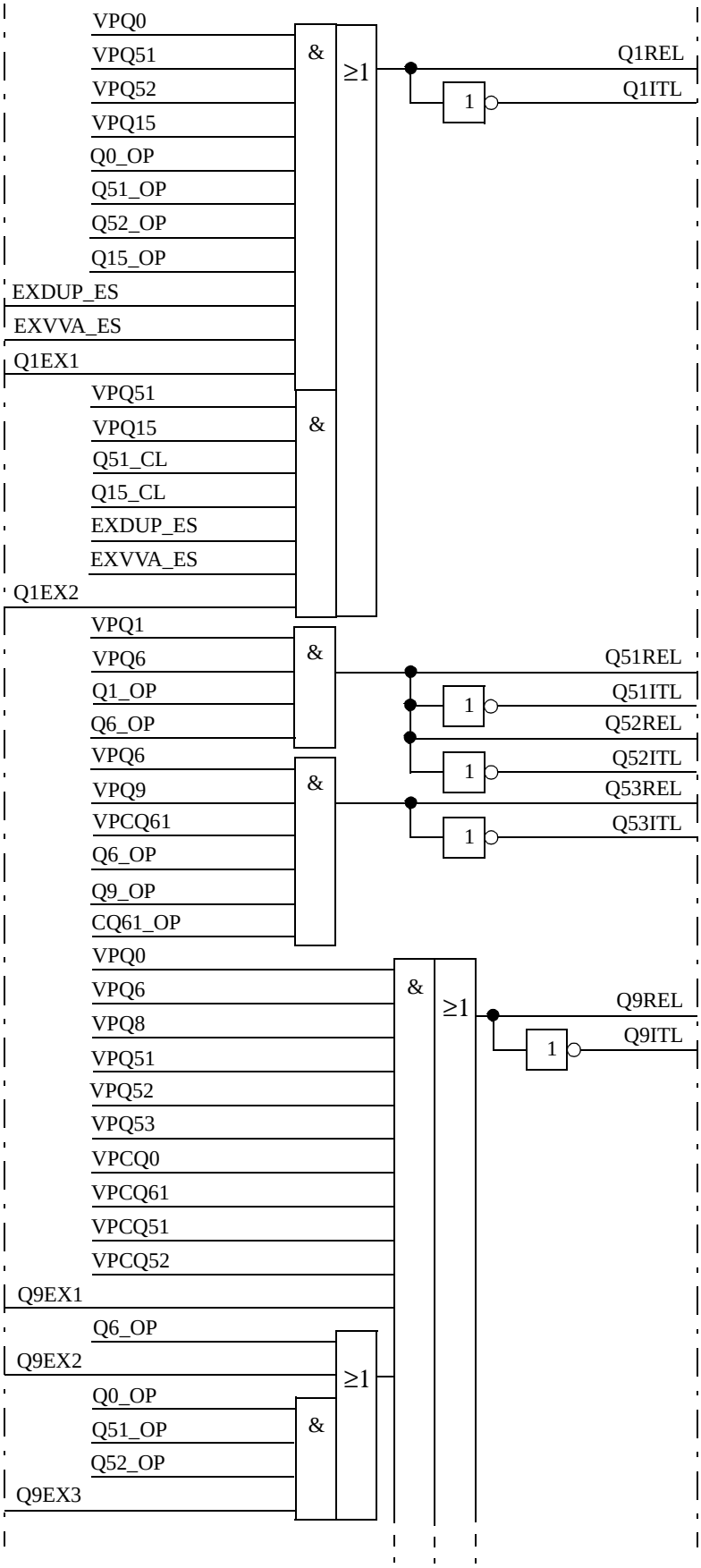
VPQ0
VPQ51
VPQ52
VPQ15
Q0_OP
Q51_OP
Q52_OP
Q15_OP
EXDUP_ES
EXVVA_ES
Q1EX1
&
≥1
Q1REL
1
Q1ITL
VPQ51
VPQ15
Q51_CL
Q15_CL
EXDUP_ES
EXVVA_ES
Q1EX2
&
VPQ1
VPQ6
Q1_OP
Q6_OP
&
Q51REL
1
Q51ITL
Q52REL
1
Q52ITL
VPQ6
VPQ9
VPCQ61
Q6_OP
Q9_OP
CQ61_OP
&
Q53REL
1
Q53ITL
VPQ0
VPQ6
VPQ8
VPQ51
VPQ52
VPQ53
VPCQ0
VPCQ61
VPCQ51
VPCQ52
Q9EX1
&
≥1
Q9REL
1
Q9ITL
Q6_OP
Q9EX2
≥1
Q0_OP
Q51_OP
Q52_OP
Q9EX3
&

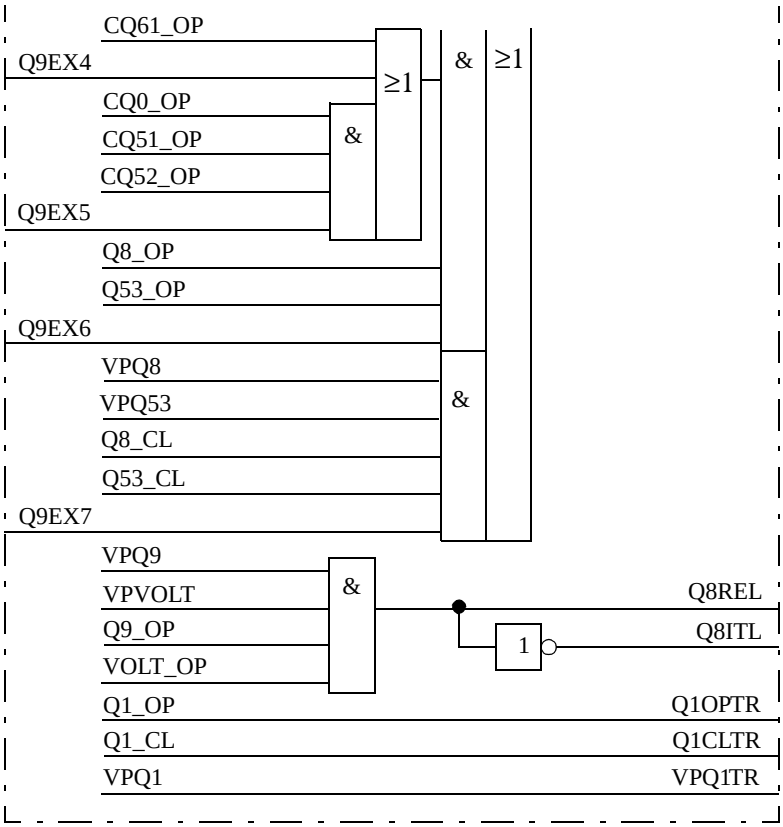

Figure 61: Function block diagram of BH_LINE_A

6.1.10 BH_CONN

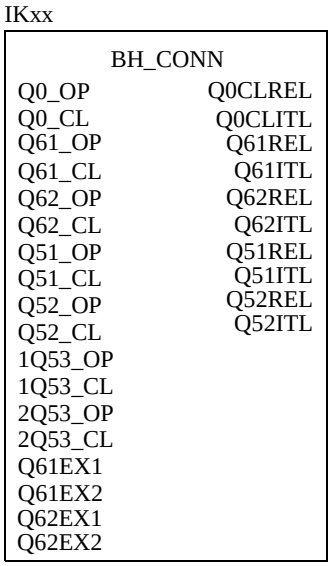

Figure 62: Function block BH_CONN

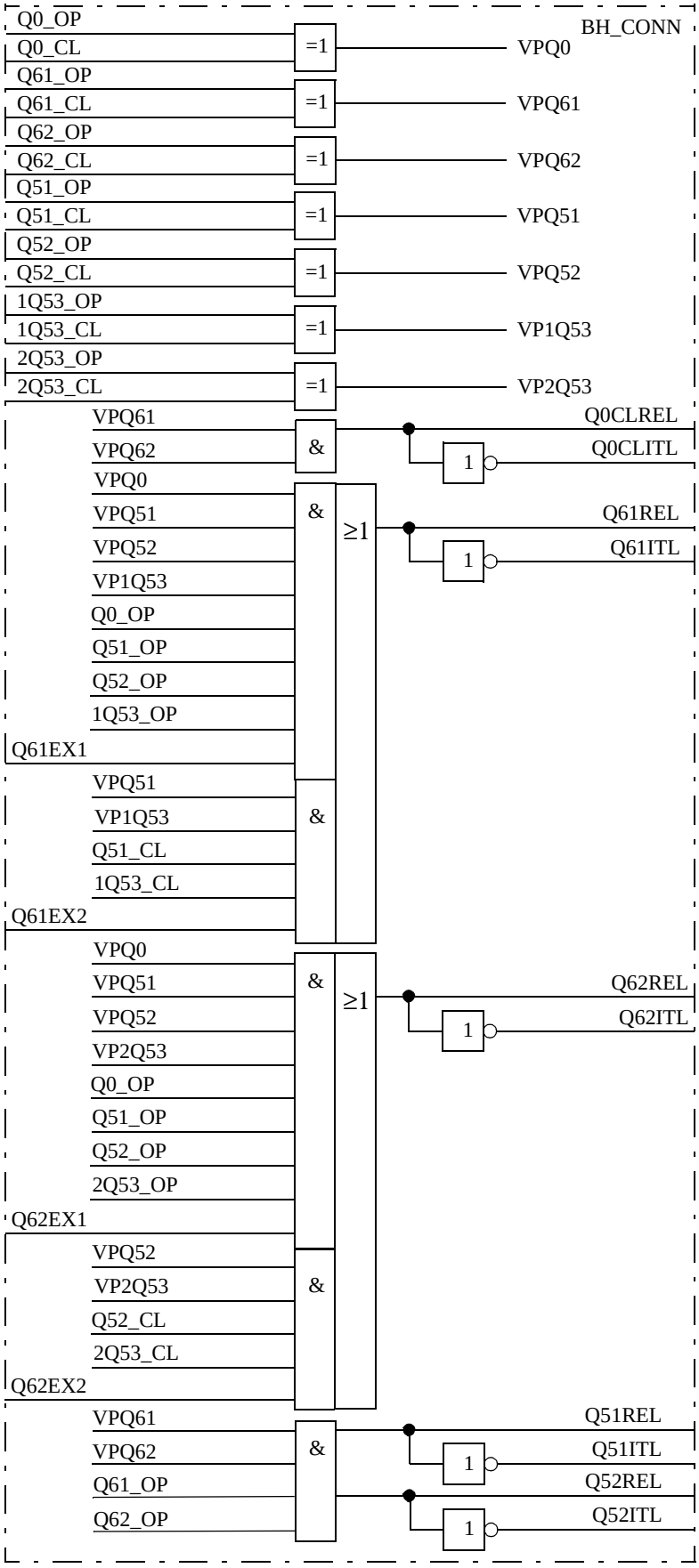

Figure 63: Function block diagram of BH_CONN

6.1.11 BH_LINE_B

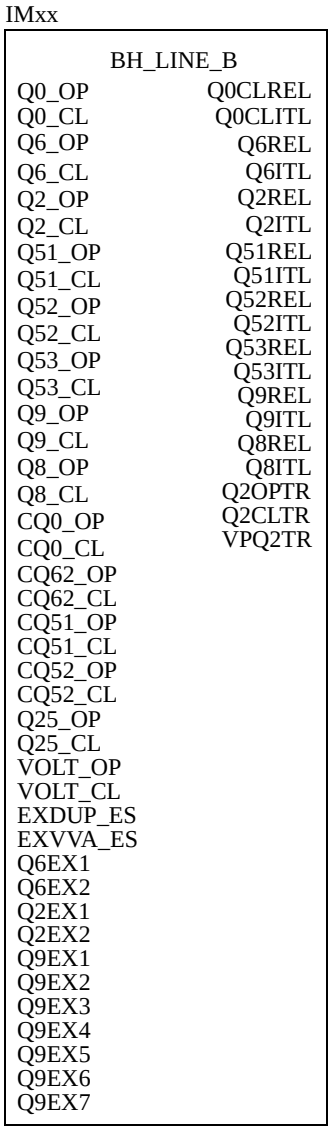

Figure 64: Function block BH_LINE_B

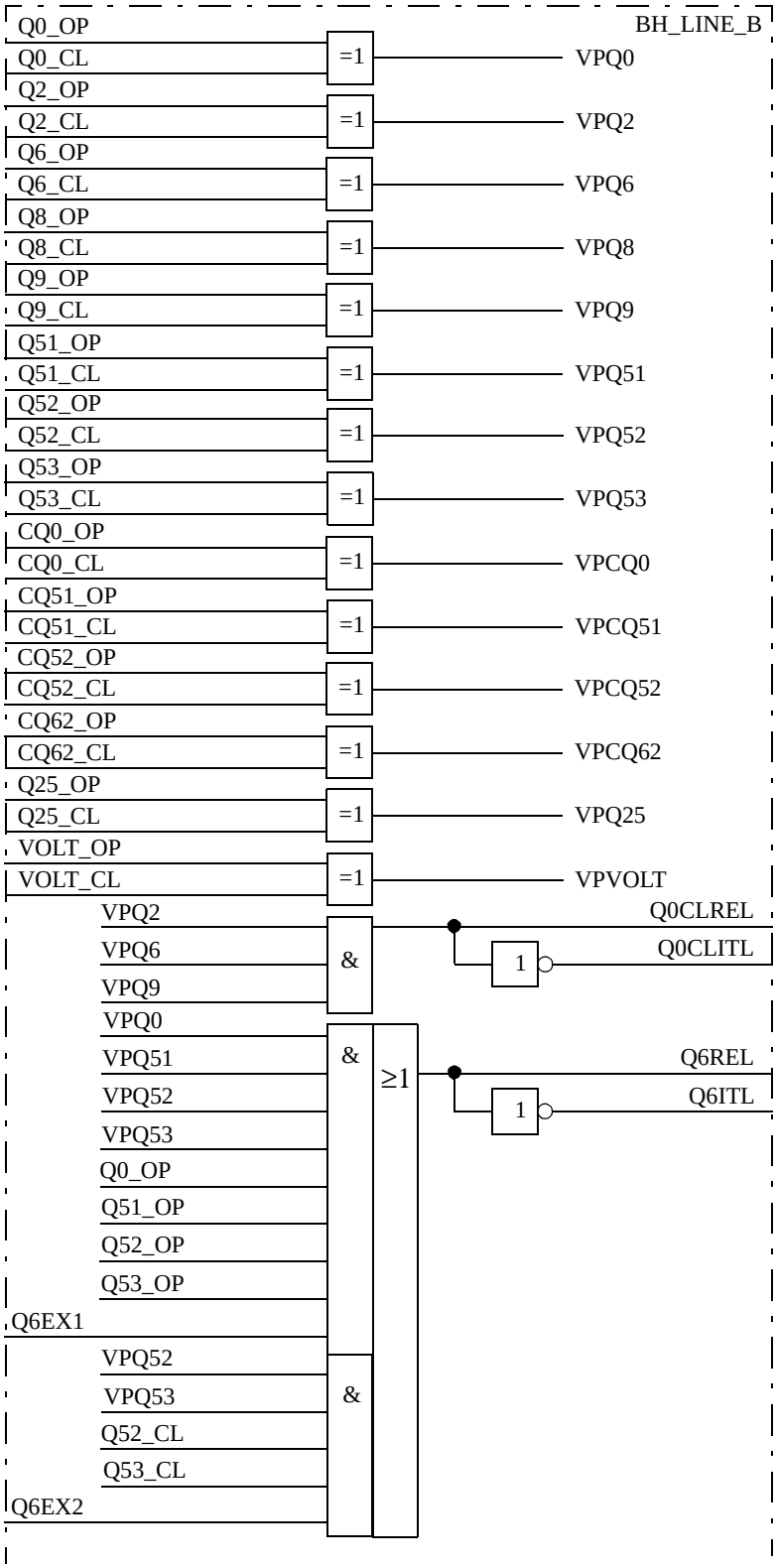
BH_LINE_B
Q0_OP
Q0_CL
Q2_OP
Q2_CL
Q6_OP
Q6_CL
Q8_OP
Q8_CL
Q9_OP
Q9_CL
Q51_OP
Q51_CL
Q52_OP
Q52_CL
Q53_OP
Q53_CL
CQ0_OP
CQ0_CL
CQ51_OP
CQ51_CL
CQ52_OP
CQ52_CL
CQ62_OP
CQ62_CL
Q25_OP
Q25_CL
VOLT_OP
VOLT_CL
=1
VPQ0
VPQ2
VPQ6
VPQ9
VPQ51
VPQ52
VPQ53
VPCQ0
VPCQ51
VPCQ52
VPCQ62
VPQ25
VPVOLT
VPQ2
VPQ6
VPQ9
&
Q0CLREL
1
Q0CLITL
VPQ0
VPQ51
VPQ52
VPQ53
Q0_OP
Q51_OP
Q52_OP
Q53_OP
Q6EX1
&
≥1
Q6REL
1
Q6ITL
VPQ52
VPQ53
Q52_CL
Q53_CL
Q6EX2
&

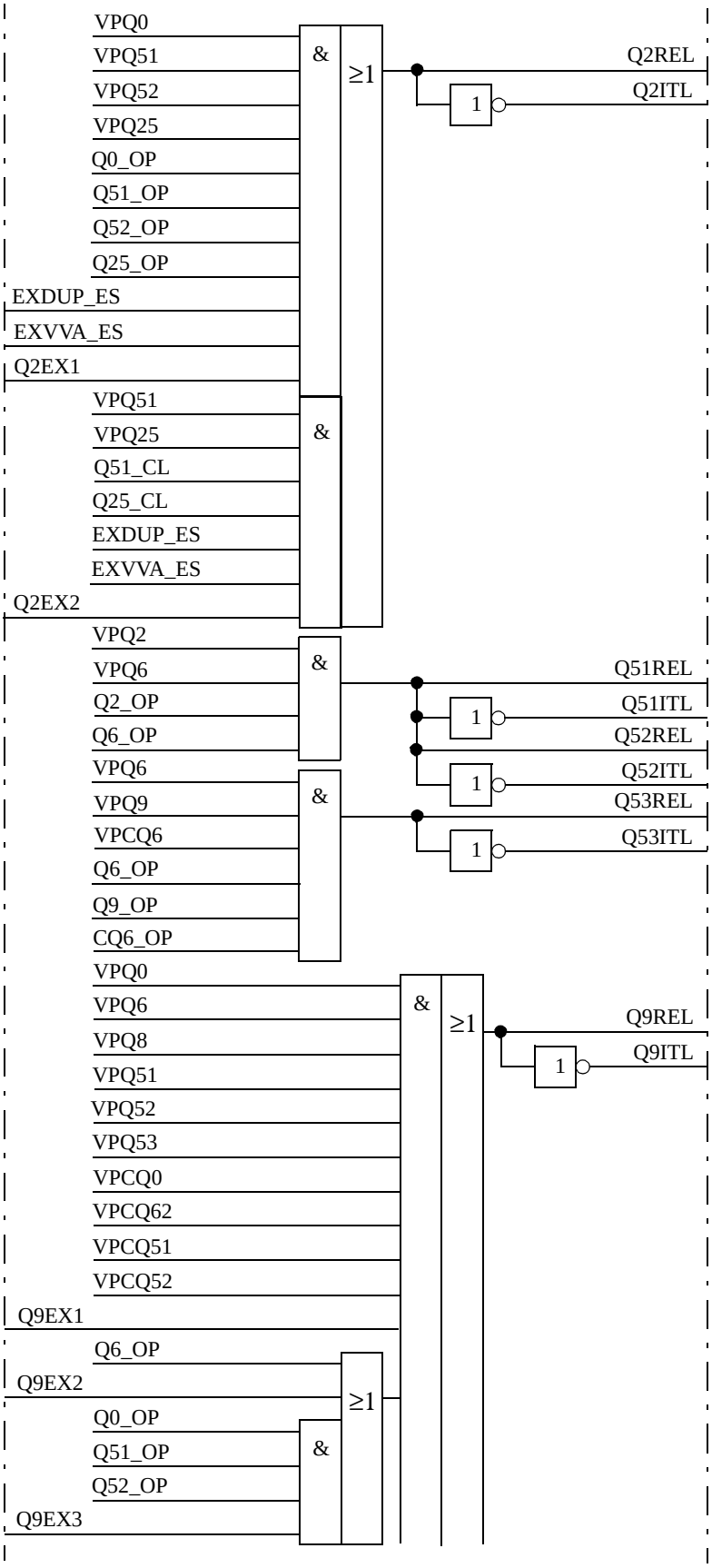
VPQ0
VPQ51
VPQ52
VPQ25
Q0_OP
Q51_OP
Q52_OP
Q25_OP
EXDUP_ES
EXVVA_ES
Q2EX1
&
≥1
1
Q2REL
Q2ITL
VPQ51
VPQ25
Q51_CL
Q25_CL
EXDUP_ES
EXVVA_ES
Q2EX2
&
VPQ2
VPQ6
Q2_OP
Q6_OP
&
Q51REL
Q51ITL
Q52REL
Q52ITL
VPQ6
VPQ9
VPCQ6
Q6_OP
Q9_OP
CQ6_OP
&
Q53REL
Q53ITL
VPQ0
VPQ6
VPQ8
VPQ51
VPQ52
VPQ53
VPCQ0
VPCQ62
VPCQ51
VPCQ52
Q9EX1
&
≥1
Q9REL
Q9ITL
Q6_OP
Q9EX2
≥1
Q0_OP
Q51_OP
Q52_OP
Q9EX3
&

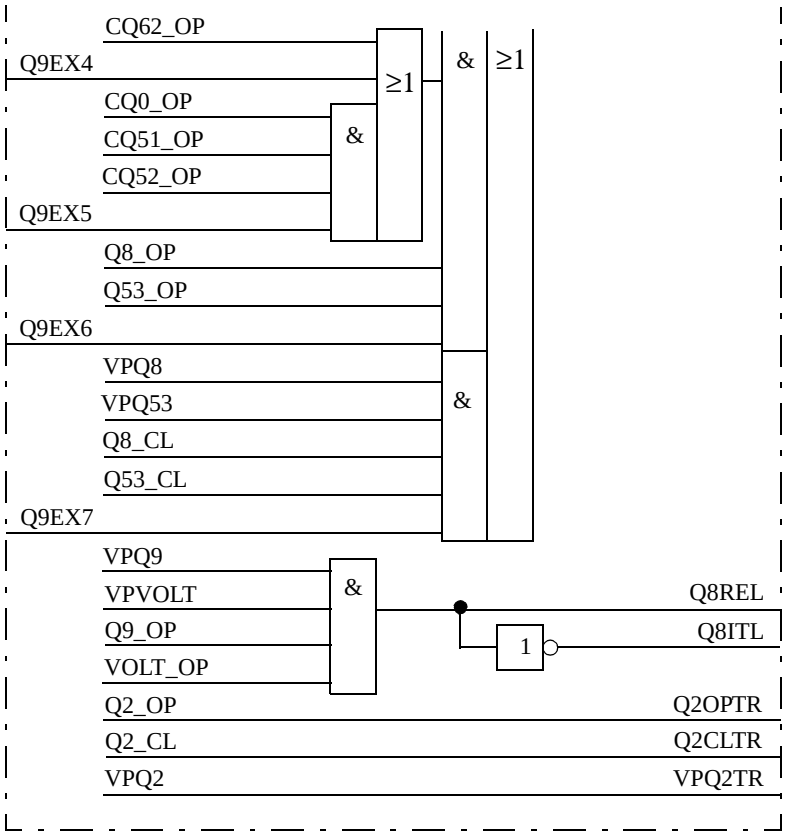

Figure 65: Function block diagram of BH_LINE_B

6.2 Signal lists

Table 1: Signal list for ABC_LINE

Block	Signal	Type	Description
IFxx-	BC_AB_CL	IN	There exists a bus coupler connection between busbar A and B
IFxx-	BC_AC_CL	IN	There exists a bus coupler connection between busbar A and C
IFxx-	BC_AC_OP	IN	There is no bus coupler connection between busbar A and C
IFxx-	BC_BC_CL	IN	There exists a bus coupler connection between busbar B and C
IFxx-	BC_BC_OP	IN	There is no bus coupler connection between busbar B and C
IFxx-	C_DC_OP	IN	All line disconnectors on bypass busbar C except in the own bay are open
IFxx-	EXDU_BPB	IN	Signal is 1 if there is no transmission error from bay BPB
IFxx-	EXDUP_BC	IN	Signal is 1 if there is no transmission error from any bus coupler bay
IFxx-	EXDUP_ES	IN	Signal is 1 if there is no transmission error from any bay containing earthing switches Q15, Q25 or Q75
IFxx-	EXVV_BPB	IN	Signal is 1 if there is no transmission error from any bay containing disconnectors on bypass busbar C
IFxx-	EXVVA_BC	IN	Signal is 1 if the interlocking programs in all bus coupler bays are running
IFxx-	EXVVA_ES	IN	Signal is 1 if the interlocking programs in all bays containing earthing switches Q15, Q25 or Q75 are running
IFxx-	Q0_CL	IN	Signal is 1 if Q0 is closed
IFxx-	Q0_OP	IN	Signal is 1 if Q0 is open
IFxx-	Q1_CL	IN	Signal is 1 if Q1 is closed
IFxx-	Q1_OP	IN	Signal is 1 if Q1 is open
IFxx-	Q15_CL	IN	Signal is 1 if Q15 on busbar A is closed
IFxx-	Q15_OP	IN	Signal is 1 if Q15 on busbar A is open
IFxx-	Q1EX1	IN	Input for an external condition for apparatus Q1
IFxx-	Q1EX2	IN	Input for an external condition for apparatus Q1
IFxx-	Q1EX3	IN	Input for an external condition for apparatus Q1
IFxx-	Q2_CL	IN	Signal is 1 if Q2 is closed
IFxx-	Q2_OP	IN	Signal is 1 if Q2 is open
IFxx-	Q25_CL	IN	Signal is 1 if Q25 on busbar B is closed
IFxx-	Q25_OP	IN	Signal is 1 if Q25 on busbar B is open
IFxx-	Q2EX1	IN	Input for an external condition for apparatus Q2
IFxx-	Q2EX2	IN	Input for an external condition for apparatus Q2
IFxx-	Q2EX3	IN	Input for an external condition for apparatus Q2
IFxx-	Q51_CL	IN	Signal is 1 if Q51 is closed
IFxx-	Q51_OP	IN	Signal is 1 if Q51 is open
IFxx-	Q52_CL	IN	Signal is 1 if Q52 is closed
IFxx-	Q52_OP	IN	Signal is 1 if Q52 is open
IFxx-	Q7_CL	IN	Signal is 1 if Q7 is closed
IFxx-	Q7_OP	IN	Signal is 1 if Q7 is open
IFxx-	Q75_CL	IN	Signal is 1 if Q75 on busbar C is closed
IFxx-	Q75_OP	IN	Signal is 1 if Q75 on busbar C is open
IFxx-	Q7EX1	IN	Input for an external condition for apparatus Q7

Table 1: Signal list for ABC_LINE (Continued)

Block	Signal	Type	Description
IFxx-	Q7EX2	IN	Input for an external condition for apparatus Q7
IFxx-	Q7EX3	IN	Input for an external condition for apparatus Q7
IFxx-	Q7EX4	IN	Input for an external condition for apparatus Q7
IFxx-	Q8_CL	IN	Signal is 1 if Q8 is closed
IFxx-	Q8_OP	IN	Signal is 1 if Q8 is open
IFxx-	Q9_CL	IN	Signal is 1 if Q9 is closed
IFxx-	Q9_OP	IN	Signal is 1 if Q9 is open
IFxx-	Q9EX1	IN	Input for an external condition for apparatus Q9
IFxx-	Q9EX2	IN	Input for an external condition for apparatus Q9
IFxx-	VOLT_CL	IN	There is voltage on the line or there is a VT (fuse) failure
IFxx-	VOLT_OP	IN	There is no voltage on the line and not fuse failure
IFxx-	VP_BC_AB	IN	Switch status of the bus coupler apparatuses connected between busbar A and B are valid (open or closed)
IFxx-	VP_BC_AC	IN	Switch status of the bus coupler apparatuses connected between busbar A and C are valid (open or closed)
IFxx-	VP_BC_BC	IN	Switch status of the bus coupler apparatuses connected between busbar B and C are valid (open or closed)
IFxx-	VP_C_DC	IN	Switch status of the disconnectors on bypass busbar C are valid (open or closed)
IFxx-	Q0CLITL	OUT	Closing of Q0 is forbidden
IFxx-	Q0CLREL	OUT	Closing of Q0 is allowed
IFxx-	Q1CLTR	OUT	Signal is 1 if Q1 is closed
IFxx-	Q1ITL	OUT	Switching of Q1 is forbidden
IFxx-	Q1OPTR	OUT	Signal is 1 if Q1 is open
IFxx-	Q1Q2CLTR	OUT	Signal is 1 if Q1 and Q2 are closed
IFxx-	Q1Q2OPTR	OUT	Signal is 1 if Q1 or Q2 or both are open
IFxx-	Q1REL	OUT	Switching of Q1 is allowed
IFxx-	Q2CLTR	OUT	Signal is 1 if Q2 is closed
IFxx-	Q2ITL	OUT	Switching of Q2 is forbidden
IFxx-	Q2OPTR	OUT	Signal is 1 if Q2 is open
IFxx-	Q2REL	OUT	Switching of Q2 is allowed
IFxx-	Q51ITL	OUT	Switching of Q51 is forbidden
IFxx-	Q51REL	OUT	Switching of Q51 is allowed
IFxx-	Q52ITL	OUT	Switching of Q52 is forbidden
IFxx-	Q52REL	OUT	Switching of Q52 is allowed
IFxx-	Q7CLTR	OUT	Signal is 1 if Q7 is closed
IFxx-	Q7ITL	OUT	Switching of Q7 is forbidden
IFxx-	Q7OPTR	OUT	Signal is 1 if Q7 is open
IFxx-	Q7REL	OUT	Switching of Q7 is allowed
IFxx-	Q8ITL	OUT	Switching of Q8 is forbidden
IFxx-	Q8REL	OUT	Switching of Q8 is allowed
IFxx-	Q9ITL	OUT	Switching of Q9 is forbidden

Table 1: Signal list for ABC_LINE (Continued)

Block	Signal	Type	Description
IFxx-	Q9REL	OUT	Switching of Q9 is allowed
IFxx-	VPQ1Q2TR	OUT	Switch status of Q1 and Q2 are valid (open or closed)
IFxx-	VPQ1TR	OUT	Switch status of Q1 is valid (open or closed)
IFxx-	VPQ2TR	OUT	Switch status of Q2 is valid (open or closed)
IFxx-	VPQ7TR	OUT	Switch status of Q7 is valid (open or closed)

Table 2: Signal list for ABC_BC

Block	Signal	Type	Description
IGxx-	BBTR_OP	IN	Signal is 1 if no busbar transfer is in progress concerning this bus coupler
IGxx-	BC_AB_CL	IN	There exists a bus coupler connection between busbar A and B
IGxx-	EXDUP_AB	IN	Signal is 1 if there is no transmission error from any bay connected to the AB busbars
IGxx-	EXDUP_BC	IN	Signal is 1 if there is no transmission error from any bay connected to the BC busbars
IGxx-	EXDUP_ES	IN	Signal is 1 if there is no transmission error from any bay containing earthing switches Q15, Q25 or Q75
IGxx-	EXVVA_AB	IN	Signal is 1 if the interlocking programs in all bays connected to the AB busbars are running
IGxx-	EXVVA_BC	IN	Signal is 1 if the interlocking programs in all bays connected to the BC busbars are running
IGxx-	EXVVA_ES	IN	Signal is 1 if the interlocking programs in all bays containing earthing switches Q15, Q25 or Q75 are running
IGxx-	Q0_CL	IN	Signal is 1 if Q0 is closed
IGxx-	Q0_O_EX1	IN	Input for an external open condition for apparatus Q0
IGxx-	Q0_O_EX2	IN	Input for an external open condition for apparatus Q0
IGxx-	Q0_O_EX3	IN	Input for an external open condition for apparatus Q0
IGxx-	Q0_OP	IN	Signal is 1 if Q0 is open
IGxx-	Q1_CL	IN	Signal is 1 if Q1 is closed
IGxx-	Q1_OP	IN	Signal is 1 if Q1 is open
IGxx-	Q15_CL	IN	Signal is 1 if Q15 on busbar A is closed
IGxx-	Q15_OP	IN	Signal is 1 if Q15 on busbar A is open
IGxx-	Q1EX1	IN	Input for an external condition for apparatus Q1
IGxx-	Q1EX2	IN	Input for an external condition for apparatus Q1
IGxx-	Q1EX3	IN	Input for an external condition for apparatus Q1
IGxx-	Q2_CL	IN	Signal is 1 if Q2 is closed
IGxx-	Q2_OP	IN	Signal is 1 if Q2 is open
IGxx-	Q20_CL	IN	Signal is 1 if Q20 is closed
IGxx-	Q20_OP	IN	Signal is 1 if Q20 is open
IGxx-	Q20EX1	IN	Input for an external condition for apparatus Q20
IGxx-	Q20EX2	IN	Input for an external condition for apparatus Q20

Table 2: Signal list for ABC_BC (Continued)

Block	Signal	Type	Description
IGxx-	Q20EX3	IN	Input for an external condition for apparatus Q20
IGxx-	Q25_CL	IN	Signal is 1 if Q25 on busbar B is closed
IGxx-	Q25_OP	IN	Signal is 1 if Q25 on busbar B is open
IGxx-	Q2EX1	IN	Input for an external condition for apparatus Q2
IGxx-	Q2EX2	IN	Input for an external condition for apparatus Q2
IGxx-	Q51_CL	IN	Signal is 1 if Q51 is closed
IGxx-	Q51_OP	IN	Signal is 1 if Q51 is open
IGxx-	Q52_CL	IN	Signal is 1 if Q52 is closed
IGxx-	Q52_OP	IN	Signal is 1 if Q52 is open
IGxx-	Q7_CL	IN	Signal is 1 if Q7 is closed
IGxx-	Q7_OP	IN	Signal is 1 if Q7 is open
IGxx-	Q75_CL	IN	Signal is 1 if Q75 on busbar C is closed
IGxx-	Q75_OP	IN	Signal is 1 if Q75 on busbar C is open
IGxx-	Q7EX1	IN	Input for an external condition for apparatus Q7
IGxx-	Q7EX2	IN	Input for an external condition for apparatus Q7
IGxx-	VP_BBTR	IN	Switch status are valid for all apparatuses involved in the busbar transfer
IGxx-	VP_BC_AB	IN	Switch status of the bus coupler apparatuses connected between busbar A and B are valid (open or closed)
IGxx-	BCABCLTR	OUT	Bus coupler connection via the own buscoupler between busbar A and B
IGxx-	BCABOPTR	OUT	No bus coupler connection via the own buscoupler between busbar A and B
IGxx-	BCACCLTR	OUT	Bus coupler connection via the own buscoupler between busbar A and C
IGxx-	BCACOPTR	OUT	No bus coupler connection via the own buscoupler between busbar A and C
IGxx-	BCBCCLTR	OUT	Bus coupler connection via the own buscoupler between busbar B and C
IGxx-	BCBCOPTR	OUT	No bus coupler connection via the own buscoupler between busbar B and C
IGxx-	Q0CLITL	OUT	Closing of Q0 is forbidden
IGxx-	Q0CLREL	OUT	Closing of Q0 is allowed
IGxx-	Q0OPITL	OUT	Opening of Q0 is forbidden
IGxx-	Q0OPREL	OUT	Opening of Q0 is allowed
IGxx-	Q1CLTR	OUT	Signal is 1 if Q1 is closed
IGxx-	Q1ITL	OUT	Switching of Q1 is forbidden
IGxx-	Q1OPTR	OUT	Signal is 1 if Q1 is open
IGxx-	Q1Q20CLT	OUT	Signal is 1 if Q1 and Q20 are closed
IGxx-	Q1Q20OPT	OUT	Signal is 1 if Q1 or Q20 or both are open
IGxx-	Q1REL	OUT	Switching of Q1 is allowed
IGxx-	Q20CLTR	OUT	Signal is 1 if Q2 or Q20 or both are closed
IGxx-	Q20ITL	OUT	Switching of Q20 is forbidden
IGxx-	Q20OPTR	OUT	Signal is 1 if Q20 and Q2 are open
IGxx-	Q20REL	OUT	Switching of Q20 is allowed
IGxx-	Q2ITL	OUT	Switching of Q2 is forbidden
IGxx-	Q2REL	OUT	Switching of Q2 is allowed
IGxx-	Q51ITL	OUT	Switching of Q51 is forbidden

Table 2: Signal list for ABC_BC (Continued)

Block	Signal	Type	Description
IGxx-	Q51REL	OUT	Switching of Q51 is allowed
IGxx-	Q52ITL	OUT	Switching of Q52 is forbidden
IGxx-	Q52REL	OUT	Switching of Q52 is allowed
IGxx-	Q7CLTR	OUT	Signal is 1 if Q7 is closed
IGxx-	Q7ITL	OUT	Switching of Q7 is forbidden
IGxx-	Q7OPTR	OUT	Signal is 1 if Q7 is open
IGxx-	Q7REL	OUT	Switching of Q7 is allowed
IGxx-	VPBCABTR	OUT	Switch status of the bus coupler apparatuses (Q0, Q1 and Q2) connected between busbar A and B are valid (open or closed)
IGxx-	VPBCACTR	OUT	Switch status of the bus coupler apparatuses (Q0, Q1 and Q7) connected between busbar A and C are valid (open or closed)
IGxx-	VPBCBCTR	OUT	Switch status of the bus coupler apparatuses (Q0, Q20 and Q7) connected between busbar B and C are valid (open or closed)
IGxx-	VPQ1Q20T	OUT	Switch status of Q1 and Q20 are valid (open or closed)
IGxx-	VPQ1TR	OUT	Switch status of Q1 is valid (open or closed)
IGxx-	VPQ20TR	OUT	Switch status of Q2 and Q20 are valid (open or closed)
IGxx-	VPQ7TR	OUT	Switch status of Q7 is valid (open or closed)

Table 3: Signal list for AB_TRAFO

Block	Signal	Type	Description
IExx-	BC_AB_CL	IN	There exists a bus coupler connection between busbar A and B
IExx-	EXDUP_BC	IN	Signal is 1 if there is no transmission error from any bus coupler bay
IExx-	EXDUP_ES	IN	Signal is 1 if there is no transmission error from any bay containing earthing switches Q15 or Q25
IExx-	EXVVA_BC	IN	Signal is 1 if the interlocking programs in all bus coupler bays are running
IExx-	EXVVA_ES	IN	Signal is 1 if the interlocking programs in all bays containing earthing switches Q15 or Q25 are running
IExx-	Q0_CL	IN	Signal is 1 if Q0 is closed
IExx-	Q0_OP	IN	Signal is 1 if Q0 is open
IExx-	Q0EX1	IN	Input for an external condition for apparatus Q0
IExx-	Q0EX2	IN	Input for an external condition for apparatus Q0
IExx-	Q0EX3	IN	Input for an external condition for apparatus Q0
IExx-	Q1_CL	IN	Signal is 1 if Q1 is closed
IExx-	Q1_OP	IN	Signal is 1 if Q1 is open
IExx-	Q15_CL	IN	Signal is 1 if Q15 on busbar A is closed
IExx-	Q15_OP	IN	Signal is 1 if Q15 on busbar A is open
IExx-	Q1EX1	IN	Input for an external condition for apparatus Q1
IExx-	Q1EX2	IN	Input for an external condition for apparatus Q1
IExx-	Q1EX3	IN	Input for an external condition for apparatus Q1
IExx-	Q2_CL	IN	Signal is 1 if Q2 is closed

Table 3: Signal list for AB_TRAFO (Continued)

Block	Signal	Type	Description
IExx-	Q2_OP	IN	Signal is 1 if Q2 is open
IExx-	Q25_CL	IN	Signal is 1 if Q25 on busbar B is closed
IExx-	Q25_OP	IN	Signal is 1 if Q25 on busbar B is open
IExx-	Q2EX1	IN	Input for an external condition for apparatus Q2
IExx-	Q2EX2	IN	Input for an external condition for apparatus Q2
IExx-	Q2EX3	IN	Input for an external condition for apparatus Q2
IExx-	Q51_CL	IN	Signal is 1 if Q51 is closed
IExx-	Q51_OP	IN	Signal is 1 if Q51 is open
IExx-	Q52_CL	IN	Signal is 1 if Q52 is closed
IExx-	Q52_OP	IN	Signal is 1 if Q52 is open
IExx-	TQ1_CL	IN	Signal is 1 if T_Q1 is closed
IExx-	TQ1_OP	IN	Signal is 1 if T_Q1 is open
IExx-	TQ2_CL	IN	Signal is 1 if T_Q2 is closed
IExx-	TQ2_OP	IN	Signal is 1 if T_Q2 is open
IExx-	TQ51_CL	IN	Signal is 1 if T_Q51 is closed
IExx-	TQ51_OP	IN	Signal is 1 if T_Q51 is open
IExx-	VP_BC_AB	IN	Switch status of the bus coupler apparatuses are valid (open or closed)
IExx-	Q0CLITL	OUT	Closing of Q0 is forbidden
IExx-	Q0CLREL	OUT	Closing of Q0 is allowed
IExx-	Q1CLTR	OUT	Signal is 1 if Q1 is closed
IExx-	Q1ITL	OUT	Switching of Q1 is forbidden
IExx-	Q1OPTR	OUT	Signal is 1 if Q1 is open
IExx-	Q1Q2CLTR	OUT	Signal is 1 if Q1 and Q2 are closed
IExx-	Q1Q2OPTR	OUT	Signal is 1 if Q1,Q2 or both are open
IExx-	Q1REL	OUT	Switching of Q1 is allowed
IExx-	Q2CLTR	OUT	Signal is 1 if Q2 is closed
IExx-	Q2ITL	OUT	Switching of Q2 is forbidden
IExx-	Q2OPTR	OUT	Signal is 1 if Q2 is open
IExx-	Q2REL	OUT	Switching of Q2 is allowed
IExx-	Q51ITL	OUT	Switching of Q51 is forbidden
IExx-	Q51REL	OUT	Switching of Q51 is allowed
IExx-	Q52ITL	OUT	Switching of Q52 is forbidden
IExx-	Q52REL	OUT	Switching of Q52 is allowed
IExx-	VPQ1Q2TR	OUT	Switch status of Q1 and Q2 are valid (open or closed)
IExx-	VPQ1TR	OUT	Switch status of Q1 is valid (open or closed)
IExx-	VPQ2TR	OUT	Switch status of Q2 is valid (open or closed)

Table 4: Signal list for A1A2_BS

Block	Signal	Type	Description
IHxx-	A1Q15_CL	IN	Signal is 1 if Q15 on busbar A1 is closed
IHxx-	A1Q15_OP	IN	Signal is 1 if Q15 on busbar A1 is open
IHxx-	A2Q15_CL	IN	Signal is 1 if Q15 on busbar A2 is closed
IHxx-	A2Q15_OP	IN	Signal is 1 if Q15 on busbar A2 is open
IHxx-	BBTR_OP	IN	No busbar transfer is going on concerning this bus section
IHxx-	EXDUP_AB	IN	Signal is 1 if there is no transmission error from any bay connected to the AB busbars
IHxx-	EXDUP_ES	IN	Signal is 1 if there is no transmission error from any bay containing earthing switches Q15 in section A1 and A2
IHxx-	EXVVA_AB	IN	Signal is 1 if the interlocking programs in all bays connected to the AB bus-bars are running
IHxx-	EXVVA_ES	IN	Signal is 1 if the interlocking programs in all bays containing earthing switches Q15 in section A1 and A2 are running
IHxx-	Q0_CL	IN	Signal is 1 if Q0 is closed
IHxx-	Q0_O_EX1	IN	Input for an external open condition for apparatus Q0
IHxx-	Q0_O_EX2	IN	Input for an external open condition for apparatus Q0
IHxx-	Q0_O_EX3	IN	Input for an external open condition for apparatus Q0
IHxx-	Q0_OP	IN	Signal is 1 if Q0 is open
IHxx-	Q11_CL	IN	Signal is 1 if Q11 is closed
IHxx-	Q11_OP	IN	Signal is 1 if Q11 is open
IHxx-	Q11EX1	IN	Input for an external condition for apparatus Q11
IHxx-	Q11EX2	IN	Input for an external condition for apparatus Q11
IHxx-	Q12_CL	IN	Signal is 1 if Q12 is closed
IHxx-	Q12_OP	IN	Signal is 1 if Q12 is open
IHxx-	Q12EX1	IN	Input for an external condition for apparatus Q12
IHxx-	Q12EX2	IN	Input for an external condition for apparatus Q12
IHxx-	Q51_CL	IN	Signal is 1 if Q51 is closed
IHxx-	Q51_OP	IN	Signal is 1 if Q51 is open
IHxx-	Q52_CL	IN	Signal is 1 if Q52 is closed
IHxx-	Q52_OP	IN	Signal is 1 if Q52 is open
IHxx-	VP_BBTR	IN	Switch status are valid for all apparatuses involved in the busbar transfer
IHxx-	A1A2CLTR	OUT	Bus coupler connection between bus section A1 and A2
IHxx-	A1A2OPTR	OUT	No bus coupler connection between bus section A1 and A2
IHxx-	Q0CLITL	OUT	Closing of Q0 is forbidden
IHxx-	Q0CLREL	OUT	Closing of Q0 is allowed
IHxx-	Q0OPITL	OUT	Opening of Q0 is forbidden
IHxx-	Q0OPREL	OUT	Opening of Q0 is allowed
IHxx-	Q11CLTR	OUT	Signal is 1 if Q11 is closed
IHxx-	Q11ITL	OUT	Switching of Q11 is forbidden
IHxx-	Q11OPTR	OUT	Signal is 1 if Q11 is open
IHxx-	Q11REL	OUT	Switching of Q11 is allowed
IHxx-	Q12CLTR	OUT	Signal is 1 if Q12 is closed

Table 4: Signal list for A1A2_BS (Continued)

Block	Signal	Type	Description
IHxx-	Q12ITL	OUT	Switching of Q12 is forbidden
IHxx-	Q12OPTR	OUT	Signal is 1 if Q12 is open
IHxx-	Q12REL	OUT	Switching of Q12 is allowed
IHxx-	Q51ITL	OUT	Switching of Q51 is forbidden
IHxx-	Q51REL	OUT	Switching of Q51 is allowed
IHxx-	Q52ITL	OUT	Switching of Q52 is forbidden
IHxx-	Q52REL	OUT	Switching of Q52 is allowed
IHxx-	VPA1A2TR	OUT	Switch status of Q0, Q11 and Q12 are valid (open or closed)
IHxx-	VPQ11TR	OUT	Switch status of Q11 is valid (open or closed)
IHxx-	VPQ12TR	OUT	Switch status of Q12 is valid (open or closed)

Table 5: Signal list for A1A2_DC

Block	Signal	Type	Description
IIxx-	A1DC_OP	IN	Signal is 1 if all disconnectors on busbar A1 are open
IIxx-	A1Q15_CL	IN	Signal is 1 if Q15 on busbar A1 is closed
IIxx-	A1Q15_OP	IN	Signal is 1 if Q15 on busbar A1 is open
IIxx-	A2DC_OP	IN	Signal is 1 if all disconnectors on busbar A2 are open
IIxx-	A2Q15_CL	IN	Signal is 1 if Q15 on busbar A2 is closed
IIxx-	A2Q15_OP	IN	Signal is 1 if Q15 on busbar A2 is open
IIxx-	EXDUP_BB	IN	Signal is 1 if there is no transmission error from any bay containing disconnectors connected to the busbar sections A1 and A2
IIxx-	EXDUP_ES	IN	Signal is 1 if there is no transmission error from any bay containing earthing switches Q15 in section A1 and A2
IIxx-	EXVVA_BB	IN	Signal is 1 if the interlocking programs in all bays containing disconnectors connected to the busbar sections A1 and A2
IIxx-	EXVVA_ES	IN	Signal is 1 if the interlocking programs in all bays containing earthing switches Q15 in section A1 and A2 are running
IIxx-	Q11_CL	IN	Signal is 1 if Q11 is closed
IIxx-	Q11_OP	IN	Signal is 1 if Q11 is open
IIxx-	Q11C_EX1	IN	Input for an external close condition for apparatus Q11
IIxx-	Q11C_EX2	IN	Input for an external close condition for apparatus Q11
IIxx-	Q11O_EX1	IN	Input for an external open condition for apparatus Q11
IIxx-	Q11O_EX2	IN	Input for an external open condition for apparatus Q11
IIxx-	Q11O_EX3	IN	Input for an external open condition for apparatus Q11
IIxx-	VPA1_DC	IN	Switch status of disconnectors on busbar A1 are valid
IIxx-	VPA2_DC	IN	Switch status of disconnectors on busbar A2 are valid
IIxx-	DCCLTR	OUT	Signal is 1 if the bus section disconnector is closed
IIxx-	DCOPTR	OUT	Signal is 1 if the bus section disconnector is open
IIxx-	Q11CLITL	OUT	For GIS closing of Q11 is forbidden

Table 5: Signal list for A1A2_DC (Continued)

Block	Signal	Type	Description
IIxx-	Q11CLREL	OUT	For GIS closing of Q11 is allowed
IIxx-	Q11OPITL	OUT	Switching of Q11 is forbidden. For GIS opening of Q11 is forbidden
IIxx-	Q11OPREL	OUT	Switching of Q11 is allowed. For GIS opening of Q11 is allowed
IIxx-	VPDCTR	OUT	Switch status of Q11 is valid (open or closed)

Table 6: Signal list for BB_ES

Block	Signal	Type	Description
IJxx-	ABCDC_OP	IN	Signal is 1 if all disconnectors on this busbar part are open
IJxx-	EXDUP_BB	IN	Signal is 1 if no transmission error from any bay containing all disconnectors on this busbar part
IJxx-	EXVVA_BB	IN	Signal is 1 if the interlocking programs in all bays containing all disconnectors on this busbar part are running
IJxx-	Q15_CL	IN	Signal is 1 if Q15 on this busbar part is closed
IJxx-	Q15_OP	IN	Signal is 1 if Q15 on this busbar part is open
IJxx-	VP_ABCDC	IN	The switch status of all disconnectors on this busbar part are valid.
IJxx-	BBESCLTR	OUT	Signal is 1 if Q15 on this busbar part is closed
IJxx-	BBESOPTR	OUT	Signal is 1 if Q15 on this busbar part is open
IJxx-	Q15ITL	OUT	Switching of Q15 is forbidden
IJxx-	Q15REL	OUT	Switching of Q15 is allowed

Table 7: Signal list for DB_BUS_A

Block	Signal	Type	Description
IBxx-	EXDUP_ES	IN	Signal is 1 if there is no transmission error from any bay containing earthing switches Q15
IBxx-	EXVVA_ES	IN	Signal is 1 if the interlocking programs in all bays containing earthing switches Q15 are running
IBxx-	Q01_CL	IN	Signal is 1 if Q01 is closed
IBxx-	Q01_OP	IN	Signal is 1 if Q01 is open
IBxx-	Q1_CL	IN	Signal is 1 if Q1 is closed
IBxx-	Q1_OP	IN	Signal is 1 if Q1 is open
IBxx-	Q15_CL	IN	Signal is 1 if Q15 on busbar A is closed
IBxx-	Q15_OP	IN	Signal is 1 if Q15 on busbar A is open
IBxx-	Q1EX1	IN	Input for an external condition for apparatus Q1
IBxx-	Q1EX2	IN	Input for an external condition for apparatus Q1
IBxx-	Q51_CL	IN	Signal is 1 if Q51 is closed
IBxx-	Q51_OP	IN	Signal is 1 if Q51 is open
IBxx-	Q52_CL	IN	Signal is 1 if Q52 is closed

Table 7: Signal list for DB_BUS_A (Continued)

Block	Signal	Type	Description
IBxx-	Q52_OP	IN	Signal is 1 if Q52 is open
IBxx-	Q53_CL	IN	Signal is 1 if Q53 is closed
IBxx-	Q53_OP	IN	Signal is 1 if Q53 is open
IBxx-	Q61_CL	IN	Signal is 1 if Q61 is closed
IBxx-	Q61_OP	IN	Signal is 1 if Q61 is open
IBxx-	Q61EX1	IN	Input for an external condition for apparatus Q61
IBxx-	Q61EX2	IN	Input for an external condition for apparatus Q61
IBxx-	Q01CLITL	OUT	Closing of Q01 is forbidden
IBxx-	Q01CLREL	OUT	Closing of Q01 is allowed
IBxx-	Q1CLTR	OUT	Signal is 1 if Q1 is closed
IBxx-	Q1ITL	OUT	Switching of Q1 is forbidden
IBxx-	Q1OPTR	OUT	Signal is 1 if Q1 is open
IBxx-	Q1REL	OUT	Switching of Q1 is allowed
IBxx-	Q51ITL	OUT	Switching of Q51 is forbidden
IBxx-	Q51REL	OUT	Switching of Q51 is allowed
IBxx-	Q52ITL	OUT	Switching of Q52 is forbidden
IBxx-	Q52REL	OUT	Switching of Q52 is allowed
IBxx-	Q61ITL	OUT	Switching of Q61 is forbidden
IBxx-	Q61REL	OUT	Switching of Q61 is allowed
IBxx-	VPQ1TR	OUT	Switch status of Q1 is valid (open or closed)

Table 8: Signal list of DB_LINE

Block	Signal	Type	Description
IAxx-	Q01_CL	IN	Signal is 1 if Q01 is closed
IAxx-	Q01_OP	IN	Signal is 1 if Q01 is open
IAxx-	Q02_CL	IN	Signal is 1 if Q02 is closed
IAxx-	Q02_OP	IN	Signal is 1 if Q02 is open
IAxx-	Q51_CL	IN	Signal is 1 if Q51 is closed
IAxx-	Q51_OP	IN	Signal is 1 if Q51 is open
IAxx-	Q52_CL	IN	Signal is 1 if Q52 is closed
IAxx-	Q52_OP	IN	Signal is 1 if Q52 is open
IAxx-	Q53_CL	IN	Signal is 1 if Q53 is closed
IAxx-	Q53_OP	IN	Signal is 1 if Q53 is open
IAxx-	Q54_CL	IN	Signal is 1 if Q54 is closed
IAxx-	Q54_OP	IN	Signal is 1 if Q54 is open
IAxx-	Q55_CL	IN	Signal is 1 if Q55 is closed
IAxx-	Q55_OP	IN	Signal is 1 if Q55 is open
IAxx-	Q61_CL	IN	Signal is 1 if Q61 is closed

Table 8: Signal list of DB_LINE (Continued)

Block	Signal	Type	Description
IAxx-	Q61_OP	IN	Signal is 1 if Q61 is open
IAxx-	Q62_CL	IN	Signal is 1 if Q62 is closed
IAxx-	Q62_OP	IN	Signal is 1 if Q62 is open
IAxx-	Q8_CL	IN	Signal is 1 if Q8 is closed
IAxx-	Q8_OP	IN	Signal is 1 if Q8 is open
IAxx-	Q9_CL	IN	Signal is 1 if Q9 is closed
IAxx-	Q9_OP	IN	Signal is 1 if Q9 is open
IAxx-	Q9EX1	IN	Input for an external condition for apparatus Q9
IAxx-	Q9EX2	IN	Input for an external condition for apparatus Q9
IAxx-	Q9EX3	IN	Input for an external condition for apparatus Q9
IAxx-	Q9EX4	IN	Input for an external condition for apparatus Q9
IAxx-	Q9EX5	IN	Input for an external condition for apparatus Q9
IAxx-	VOLT_CL	IN	There is voltage on the line and or a VT (fuse) failure
IAxx-	VOLT_OP	IN	There is no voltage on the line and no fuse failure
IAxx-	Q53ITL	OUT	Switching of Q53 is forbidden
IAxx-	Q53REL	OUT	Switching of Q53 is allowed
IAxx-	Q8ITL	OUT	Switching of Q8 is forbidden
IAxx-	Q8REL	OUT	Switching of Q8 is allowed
IAxx-	Q9ITL	OUT	Switching of Q9 is forbidden
IAxx-	Q9REL	OUT	Switching of Q9 is allowed

Table 9: Signal list for DB_BUS_B

Block	Signal	Type	Description
ICxx-	EXDUP_ES	IN	Signal is 1 if there is no transmission error from any bay containing earthing switches Q25
ICxx-	EXVVA_ES	IN	Signal is 1 if the interlocking programs in all bays containing earthing switches Q25 are running
ICxx-	Q02_CL	IN	Signal is 1 if Q02 is closed
ICxx-	Q02_OP	IN	Signal is 1 if Q02 is open
ICxx-	Q2_CL	IN	Signal is 1 if Q2 is closed
ICxx-	Q2_OP	IN	Signal is 1 if Q2 is open
ICxx-	Q25_CL	IN	Signal is 1 if Q25 on busbar A is closed
ICxx-	Q25_OP	IN	Signal is 1 if Q25 on busbar A is open
ICxx-	Q2EX1	IN	Input for an external condition for apparatus Q2
ICxx-	Q2EX2	IN	Input for an external condition for apparatus Q2
ICxx-	Q53_CL	IN	Signal is 1 if Q53 on busbar A is closed
ICxx-	Q53_OP	IN	Signal is 1 if Q53 on busbar A is open
ICxx-	Q54_CL	IN	Signal is 1 if Q54 is closed
ICxx-	Q54_OP	IN	Signal is 1 if Q54 is open

Table 9: Signal list for DB_BUS_B (Continued)

Block	Signal	Type	Description
ICxx-	Q55_CL	IN	Signal is 1 if Q55 is closed
ICxx-	Q55_OP	IN	Signal is 1 if Q55 is open
ICxx-	Q62_CL	IN	Signal is 1 if Q62 is closed
ICxx-	Q62_OP	IN	Signal is 1 if Q62 is open
ICxx-	Q62EX1	IN	Input for an external condition for apparatus Q62
ICxx-	Q62EX2	IN	Input for an external condition for apparatus Q62
ICxx-	Q02CLITL	OUT	Closing of Q02 is forbidden
ICxx-	Q02CLREL	OUT	Closing of Q02 is allowed
ICxx-	Q2CLTR	OUT	Signal is 1 if Q2 is closed
ICxx-	Q2ITL	OUT	Switching of Q2 is forbidden
ICxx-	Q2OPTR	OUT	Signal is 1 if Q2 is open
ICxx-	Q2REL	OUT	Switching of Q2 is allowed
ICxx-	Q54ITL	OUT	Switching of Q54 is forbidden
ICxx-	Q54REL	OUT	Switching of Q54 is allowed
ICxx-	Q55ITL	OUT	Switching of Q55 is forbidden
ICxx-	Q55REL	OUT	Switching of Q55 is allowed
ICxx-	Q62ITL	OUT	Switching of Q62 is forbidden
ICxx-	Q62REL	OUT	Switching of Q62 is allowed
ICxx-	VPQ2TR	OUT	Switch status of Q2 is valid (open or closed)

Table 10: Signal list for BH_LINE_A

Block	Signal	Type	Description
ILxx-	CQ0_CL	IN	Signal is 1 if Q0 in module BH_CONN is open
ILxx-	CQ0_OP	IN	Signal is 1 if Q0 in module BH_CONN is open
ILxx-	CQ51_CL	IN	Signal is 1 if Q51 in module BH_CONN is closed
ILxx-	CQ51_OP	IN	Signal is 1 if Q51 in module BH_CONN is open
ILxx-	CQ52_CL	IN	Signal is 1 if Q52 in module BH_CONN is closed
ILxx-	CQ52_OP	IN	Signal is 1 if Q52 in module BH_CONN is open
ILxx-	CQ61_CL	IN	Signal is 1 if Q61 in module BH_CONN is closed
ILxx-	CQ61_OP	IN	Signal is 1 if Q61 in module BH_CONN is open
ILxx-	EXDUP_ES	IN	Signal is 1 if there is no transmission error from any bay containing earthing switches Q15
ILxx-	EXVVA_ES	IN	Signal is 1 if the interlocking programs in all bays containing earthing switches Q15
ILxx-	Q0_CL	IN	Signal is 1 if Q0 is closed
ILxx-	Q0_OP	IN	Signal is 1 if Q0 is open
ILxx-	Q1_CL	IN	Signal is 1 if Q1 is closed
ILxx-	Q1_OP	IN	Signal is 1 if Q1 is open
ILxx-	Q15_CL	IN	Signal is 1 if Q15 on busbar A is closed

Table 10: Signal list for BH_LINE_A (Continued)

Block	Signal	Type	Description
ILxx-	Q15_OP	IN	Signal is 1 if Q15 on busbar A is open
ILxx-	Q1EX1	IN	Input for an external condition for apparatus Q1
ILxx-	Q1EX2	IN	Input for an external condition for apparatus Q1
ILxx-	Q51_CL	IN	Signal is 1 if Q51 is closed
ILxx-	Q51_OP	IN	Signal is 1 if Q51 is open
ILxx-	Q52_CL	IN	Signal is 1 if Q52 is closed
ILxx-	Q52_OP	IN	Signal is 1 if Q52 is open
ILxx-	Q53_CL	IN	Signal is 1 if Q53 is closed
ILxx-	Q53_OP	IN	Signal is 1 if Q53 is open
ILxx-	Q6_CL	IN	Signal is 1 if Q6 is closed
ILxx-	Q6_OP	IN	Signal is 1 if Q6 is open
ILxx-	Q6EX1	IN	Input for an external condition for apparatus Q6
ILxx-	Q6EX2	IN	Input for an external condition for apparatus Q6
ILxx-	Q8_CL	IN	Signal is 1 if Q8 is closed
ILxx-	Q8_OP	IN	Signal is 1 if Q8 is open
ILxx-	Q9_CL	IN	Signal is 1 if Q9 is closed
ILxx-	Q9_OP	IN	Signal is 1 if Q9 is open
ILxx-	Q9EX1	IN	Input for an external condition for apparatus Q9
ILxx-	Q9EX2	IN	Input for an external condition for apparatus Q9
ILxx-	Q9EX3	IN	Input for an external condition for apparatus Q9
ILxx-	Q9EX4	IN	Input for an external condition for apparatus Q9
ILxx-	Q9EX5	IN	Input for an external condition for apparatus Q9
ILxx-	Q9EX6	IN	Input for an external condition for apparatus Q9
ILxx-	Q9EX7	IN	Input for an external condition for apparatus Q9
ILxx-	VOLT_CL	IN	There is voltage on the line or there is a VT (fuse) failure
ILxx-	VOLT_OP	IN	There is no voltage on the line and not fuse failure
ILxx-	Q0CLITL	OUT	Closing of Q0 is forbidden
ILxx-	Q0CLREL	OUT	Closing of Q0 is allowed
ILxx-	Q1CLTR	OUT	Signal is 1 if Q1 is closed
ILxx-	Q1ITL	OUT	Switching of Q1 is forbidden
ILxx-	Q1OPTR	OUT	Signal is 1 if Q1 is open
ILxx-	Q1REL	OUT	Switching of Q1 is allowed
ILxx-	Q51ITL	OUT	Switching of Q51 is forbidden
ILxx-	Q51REL	OUT	Switching of Q51 is allowed
ILxx-	Q52ITL	OUT	Switching of Q52 is forbidden
ILxx-	Q52REL	OUT	Switching of Q52 is allowed
ILxx-	Q53ITL	OUT	Switching of Q53 is forbidden
ILxx-	Q53REL	OUT	Switching of Q53 is allowed
ILxx-	Q6ITL	OUT	Switching of Q6 is forbidden
ILxx-	Q6REL	OUT	Switching of Q6 is allowed
ILxx-	Q8ITL	OUT	Switching of Q8 is forbidden

Table 10: Signal list for BH_LINE_A (Continued)

Block	Signal	Type	Description
ILxx-	Q8REL	OUT	Switching of Q8 is allowed
ILxx-	Q9ITL	OUT	Switching of Q9 is forbidden
ILxx-	Q9REL	OUT	Switching of Q9 is allowed
ILxx-	VPQ1TR	OUT	Switch status of Q1 is valid (open or closed)

Table 11: Signal list for BH_CONN

Block	Signal	Type	Description
IKxx-	1Q53_CL	IN	Signal is 1 if Q53 on line 1 is closed
IKxx-	1Q53_OP	IN	Signal is 1 if Q53 on line 1 is open
IKxx-	2Q53_CL	IN	Signal is 1 if Q53 on line 2 is closed
IKxx-	2Q53_OP	IN	Signal is 1 if Q53 on line 2 is open
IKxx-	Q0_CL	IN	Signal is 1 if Q0 is closed
IKxx-	Q0_OP	IN	Signal is 1 if Q0 is open
IKxx-	Q51_CL	IN	Signal is 1 if Q51 is closed
IKxx-	Q51_OP	IN	Signal is 1 if Q51 is open
IKxx-	Q52_CL	IN	Signal is 1 if Q52 is closed
IKxx-	Q52_OP	IN	Signal is 1 if Q52 is open
IKxx-	Q61_CL	IN	Signal is 1 if Q61 is closed
IKxx-	Q61_OP	IN	Signal is 1 if Q61 is open
IKxx-	Q61EX1	IN	Input for an external condition for apparatus Q61
IKxx-	Q61EX2	IN	Input for an external condition for apparatus Q61
IKxx-	Q62_CL	IN	Signal is 1 if Q62 is closed
IKxx-	Q62_OP	IN	Signal is 1 if Q62 is open
IKxx-	Q62EX1	IN	Input for an external condition for apparatus Q62
IKxx-	Q62EX2	IN	Input for an external condition for apparatus Q62
IKxx-	Q0CLITL	OUT	Closing of Q0 is forbidden
IKxx-	Q0CLREL	OUT	Closing of Q0 is allowed
IKxx-	Q51ITL	OUT	Switching of Q51 is forbidden
IKxx-	Q51REL	OUT	Switching of Q51 is allowed
IKxx-	Q52ITL	OUT	Switching of Q52 is forbidden
IKxx-	Q52REL	OUT	Switching of Q52 is allowed
IKxx-	Q61ITL	OUT	Switching of Q61 is forbidden
IKxx-	Q61REL	OUT	Switching of Q61 is allowed
IKxx-	Q62ITL	OUT	Switching of Q62 is forbidden
IKxx-	Q62REL	OUT	Switching of Q62 is allowed

Table 12: Signal list for BH_LINE_B

Block	Signal	Type	Description
IMxx-	CQ0_CL	IN	Signal is 1 if Q0 in module BH_CONN is closed
IMxx-	CQ0_OP	IN	Signal is 1 if Q0 in module BH_CONN is open
IMxx-	CQ51_CL	IN	Signal is 1 if Q51 in module BH_CONN is closed
IMxx-	CQ51_OP	IN	Signal is 1 if Q51 in module BH_CONN is open
IMxx-	CQ52_CL	IN	Signal is 1 if Q52 in module BH_CONN is closed
IMxx-	CQ52_OP	IN	Signal is 1 if Q52 in module BH_CONN is open
IMxx-	CQ62_CL	IN	Signal is 1 if Q62 in module BH_CONN is closed
IMxx-	CQ62_OP	IN	Signal is 1 if Q62 in module BH_CONN is open
IMxx-	EXDUP_ES	IN	Signal is 1 if there is no transmission error from any bay containing earthing switches Q25
IMxx-	EXVVA_ES	IN	Signal is 1 if the interlocking programs in all bays containing earthing switches Q25
IMxx-	Q0_CL	IN	Signal is 1 if Q0 is closed
IMxx-	Q0_OP	IN	Signal is 1 if Q0 is open
IMxx-	Q2_CL	IN	Signal is 1 if Q2 is closed
IMxx-	Q2_OP	IN	Signal is 1 if Q2 is open
IMxx-	Q25_CL	IN	Signal is 1 if Q25 on busbar B is closed
IMxx-	Q25_OP	IN	Signal is 1 if Q25 on busbar B is open
IMxx-	Q2EX1	IN	Input for an external condition for apparatus Q2
IMxx-	Q2EX2	IN	Input for an external condition for apparatus Q2
IMxx-	Q51_CL	IN	Signal is 1 if Q51 is closed
IMxx-	Q51_OP	IN	Signal is 1 if Q51 is open
IMxx-	Q52_CL	IN	Signal is 1 if Q52 is closed
IMxx-	Q52_OP	IN	Signal is 1 if Q52 is open
IMxx-	Q53_CL	IN	Signal is 1 if Q53 is closed
IMxx-	Q53_OP	IN	Signal is 1 if Q53 is open
IMxx-	Q6_CL	IN	Signal is 1 if Q6 is closed
IMxx-	Q6_OP	IN	Signal is 1 if Q6 is open
IMxx-	Q6EX1	IN	Input for an external condition for apparatus Q6
IMxx-	Q6EX2	IN	Input for an external condition for apparatus Q6
IMxx-	Q8_CL	IN	Signal is 1 if Q8 is closed
IMxx-	Q8_OP	IN	Signal is 1 if Q8 is open
IMxx-	Q9_CL	IN	Signal is 1 if Q9 is closed
IMxx-	Q9_OP	IN	Signal is 1 if Q9 is open
IMxx-	Q9EX1	IN	Input for an external condition for apparatus Q9
IMxx-	Q9EX2	IN	Input for an external condition for apparatus Q9
IMxx-	Q9EX3	IN	Input for an external condition for apparatus Q9
IMxx-	Q9EX4	IN	Input for an external condition for apparatus Q9
IMxx-	Q9EX5	IN	Input for an external condition for apparatus Q9
IMxx-	Q9EX6	IN	Input for an external condition for apparatus Q9
IMxx-	Q9EX7	IN	Input for an external condition for apparatus Q9

Table 12: Signal list for BH_LINE_B (Continued)

Block	Signal	Type	Description
IMxx-	VOLT_CL	IN	There is voltage on the line or there is a VT (fuse) failure
IMxx-	VOLT_OP	IN	There is no voltage on the line and not fuse failure
IMxx-	Q0CLITL	OUT	Closing of Q0 is forbidden
IMxx-	Q0CLREL	OUT	Closing of Q0 is allowed
IMxx-	Q2CLTR	OUT	Signal is 1 if Q2 is closed
IMxx-	Q2ITL	OUT	Switching of Q2 is forbidden
IMxx-	Q2OPTR	OUT	Signal is 1 if Q2 is open
IMxx-	Q2REL	OUT	Switching of Q2 is allowed
IMxx-	Q51ITL	OUT	Switching of Q51 is forbidden
IMxx-	Q51REL	OUT	Switching of Q51 is allowed
IMxx-	Q52ITL	OUT	Switching of Q52 is forbidden
IMxx-	Q52REL	OUT	Switching of Q52 is allowed
IMxx-	Q53ITL	OUT	Switching of Q53 is forbidden
IMxx-	Q53REL	OUT	Switching of Q53 is allowed
IMxx-	Q6ITL	OUT	Switching of Q6 is forbidden
IMxx-	Q6REL	OUT	Switching of Q6 is allowed
IMxx-	Q8ITL	OUT	Switching of Q8 is forbidden
IMxx-	Q8REL	OUT	Switching of Q8 is allowed
IMxx-	Q9ITL	OUT	Switching of Q9 is forbidden
IMxx-	Q9REL	OUT	Switching of Q9 is allowed
IMxx-	VPQ2TR	OUT	Switch status of Q2 is valid (open or closed)

1 Application

The REC 561 terminal may be provided with output functions that can be controlled either from a Substation Control System or from the local HMI. The output functions can be used, for example, to control high-voltage apparatuses in switchyards. For local control functions, the local HMI can be used. Together with the configuration logic circuits, the user can govern pulses or steady output signals for control purposes within the terminal or via binary outputs.

2 Design

The command control function consists of eleven single command function blocks, CD01-CD11 for 16 binary output signals.

The output signals can be of the types Off, Steady, or Pulse. The setting is done on the MODE input, common for the whole block, from the CAP 531 configuration tool.

0=Off sets all outputs to 0, independent of the values sent from the station level, that is, the operator station or remote-control gateway.

1=Steady sets the outputs to a steady signal 0 or 1, depending on the values sent from the station level.

2=Pulse gives a pulse with one execution cycle duration, if a value sent from the station level is changed from 0 to 1. That means that the configured logic connected to the command function block may not have a cycle time longer than the execution cycle time for the command function block.

The outputs can be individually controlled from the operator station, remote-control gateway, or from the local HMI. Each output signal can be given a name with a maximum of 13 characters from the CAP 531 configuration tool.

The output signals, here CDxx-OUT1 to CDxx-OUT16, are then available for configuration to built-in functions or via the configuration logic circuits to the binary outputs of the terminal.

The command functions can be connected according to the application examples in Fig. 1 to Fig. 3. Note that the execution cyclicity of the configured logic connected to the command function block cannot have a cycle time longer than the command function block.

Fig. 1 shows an example of how the user can, in an easy way, connect the command function via the configuration logic circuit to control a high-voltage apparatus. This type of command control is normally performed

by a pulse via the binary outputs of the terminal. Fig. 1 shows a close operation, but an open operation is performed in a corresponding way without the synchro-check condition.

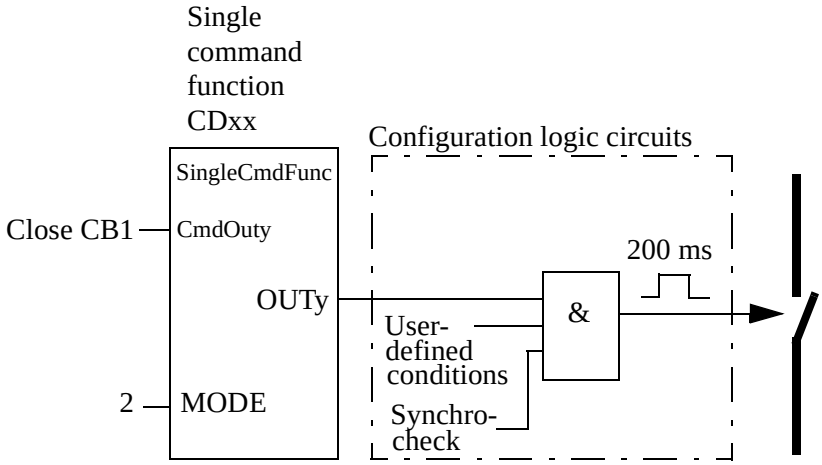

Figure 1: Application example showing a logic diagram for control of a circuit breaker via configuration logic circuits

Fig. 2 and Fig. 3 show other ways to control functions, which require steady signals On and Off. The output can be used to control built-in functions or external equipment.

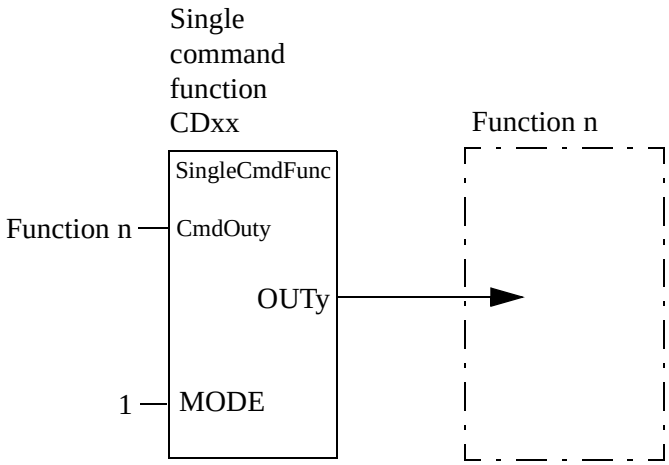

Figure 2: Application example showing a logic diagram for control of built-in functions

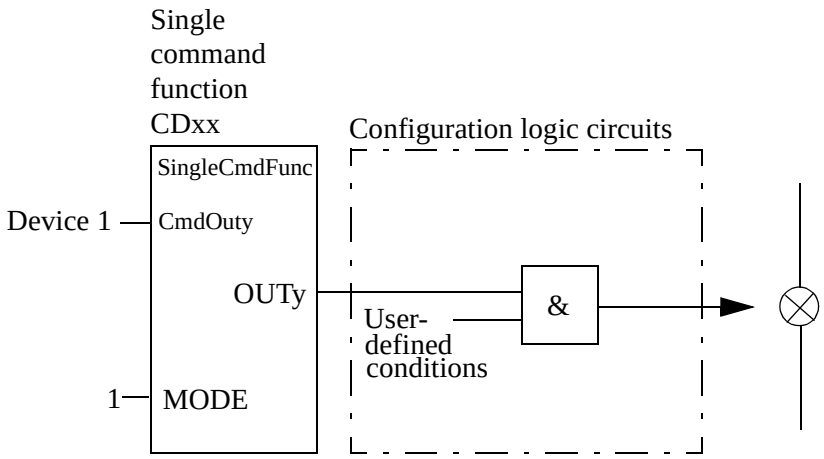

Figure 3: Application example showing a logic diagram for control of external equipment via configuration logic circuits

3 Configuration

The configuration of the signal outputs from the single command function in is made by the CAP 531 configuration tool.

4 Commands

The outputs of the single command function block can be activated from the local HMI. This can be performed under the menu:

Command
CDxx

Note: xx=01-11

Fig. 4 shows the dialogue box for the local HMI after the selection of the command menu above. The display shows the name of the output to control (CmdOut1) and the present status (Old) and proposes a new value (New).

Figure 4: Command dialogue to control an output from the single command function block

The dialogue to operate an output from the single command function block is performed from different states as follows:

1. Selection active; select the:

- C button, and then the No box activates.
- Up arrow, and then New: 0 changes to New: 1. The up arrow changes to the down arrow.
- E button, and then the Yes box activates.

2. Yes box active; select the:

- C button to cancel the action and return to the CMD/CDxx menu window.
- E button to confirm the action and return to the CMD/CDxx menu window.
- Right arrow to activate the No box.

3. No box active; select the:

- C button to cancel the action and return to the CMD/CDxx menu window.
- E button to confirm the action and return to the CMD/CDxx menu window.
- Left arrow to activate the Yes box.

5 Setting

The setting parameters for the single command function are set from the CAP 531 configuration tool.

Parameters to be set are MODE, common for the whole block, and Cmd-Outy - including the name for each output signal. The MODE input sets the outputs to be one of the types Off, Steady, or Pulse.

The appendix shows the parameters and their setting ranges.

6 Testing

For the single command function block, it is necessary to configure the output signal to corresponding binary output of the terminal. The operation of the function is then checked from the local HMI by applying the commands with the MODE Off, Steady, or Pulse and by observing the logic statuses of the corresponding binary output.

Command control functions included in the operation of different built-in functions must be tested at the same time as their corresponding functions.

7 Appendix

7.1 Function block

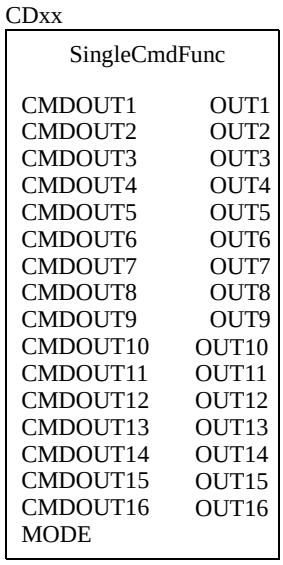

Figure 5: Function block for the single command function

7.2 Signal list

In the signal list, xx=01-11

Block	Signal	Type	Description
CDxx-	OUTy	OUT	Command output y (y=1-16)
CDxx-	CMDOUTy		See settings table
CDxx-	MODE		See settings table

7.3 Setting table

In the setting table, xx=01-11

Parameter	Range	Unit	Default	Parameter description
CMDOUTy	User def. string	String	CDxx-CMD-OUTy	User defined name for output y (y=1-16) of function block CDxx. String length up to 13 characters,all characters available on the HMI can be used
MODE	0, 1, 2		0	Operation mode, 0: Off, 1: Not pulsed (steady). 2: Pulsed. Can only be set from the CAP 531 configuration tool

1 Application

1.1 Synchrocheck

The synchrocheck function is used for controlled closing of a circuit in an interconnected network. When used, the function gives an enable signal at satisfied voltage conditions across the breaker to be closed. When there is a parallel circuit established, the frequency is normally the same at the two sides of the open breaker. At power swings, e.g. after a line fault, an oscillating difference can appear. Across the open breaker, there can be a phase angle and a voltage amplitude difference due to voltage drop across the parallel circuit or circuits. The synchro-check function measures the difference between the U-line and the U-bus, regarding voltage (UDiff), phase angle (PhaseDiff), and frequency (FreqDiff). It operates and permits closing of the circuit breaker when these conditions are simultaneously fulfilled.

- The voltages U-line and U-bus are higher than the set value for UHigh of the base voltage U1b.
- The differences in the voltage and phase angles are smaller than the set values of UDiff and PhaseDiff.
- The difference in frequency is less than the set value of FreqDiff. The bus frequency must also be within a range of ±5 Hz from the rated frequency.

The function can be used as a condition to be fulfilled before the breaker is closed at manual closing and/or together with the auto-recloser function.

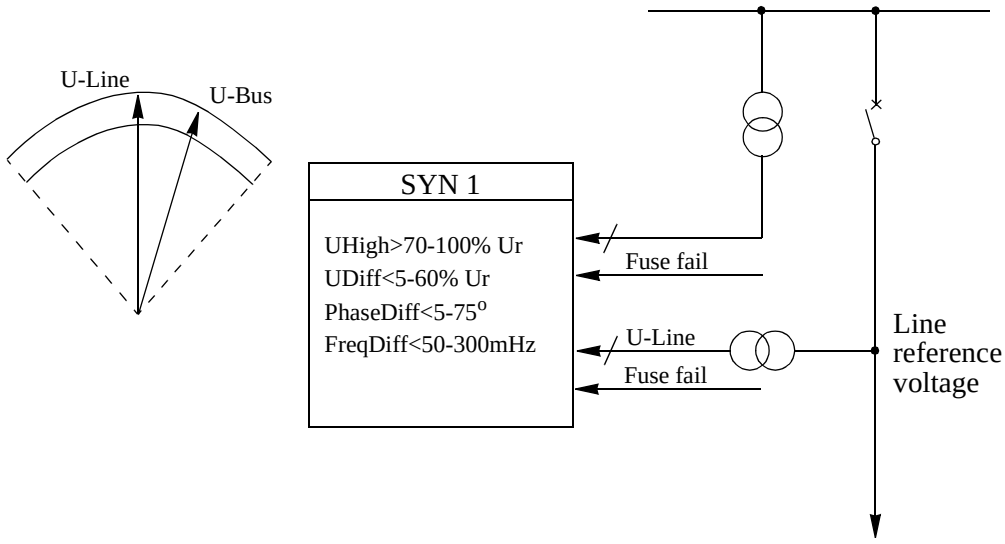

Figure 1: Synchrocheck

The voltage circuits are arranged differently depending on the number of synchrocheck functions that are included in the terminal.

In terminals intended for one bay the U-line voltage reference phase is selected on the human-machine interface (HMI). The reference voltage can be single-phase L1, L2, L3 or phase-phase L1-L2, L2-L3, L3-L1. The U-bus voltage must then be connected to the same phase or phases as are chosen on the HMI. Figure 2: shows the voltage connection.

In terminals intended for several bays, all voltage inputs are single phase circuits. The voltage can be selected for single phase or phase-to-phase measurement on the HMI. All voltage inputs must be connected to the same phase or phases.

The circuit breaker can be closed when the conditions for FreqDiff, PhaseDiff, and UDiff are fulfilled with the UHigh condition.

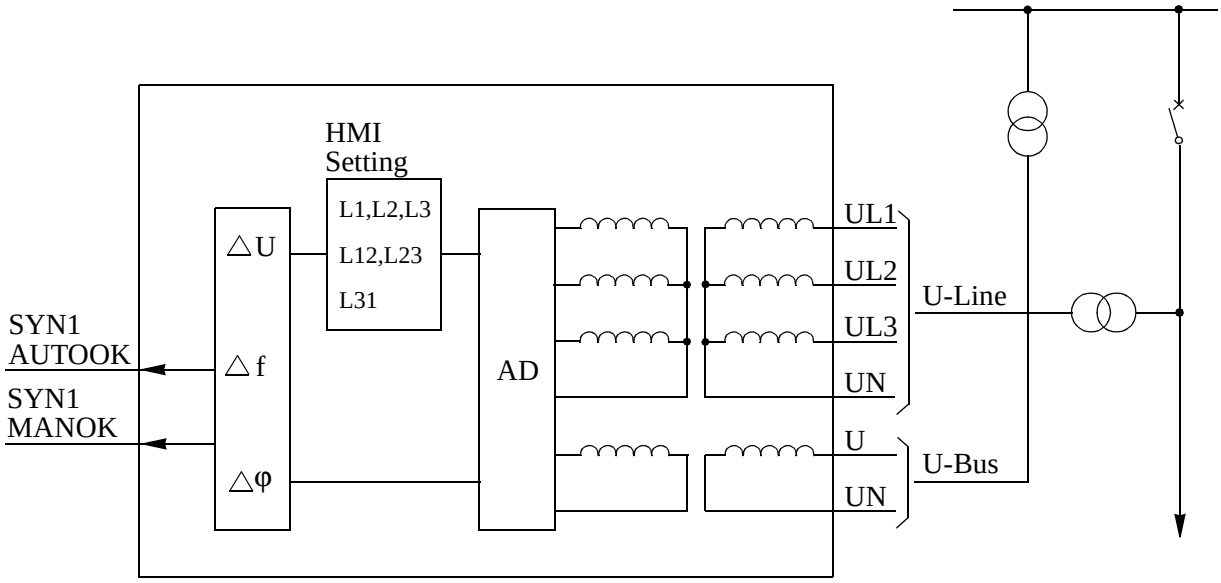

Figure 2: Connection of the synchrocheck function for one bay.

1.2 Energising check

The energising check is made when a disconnected line is to be connected to an energised section of a network, see Figure 3:. The check can also be set to allow energisation of the busbar or in both directions.

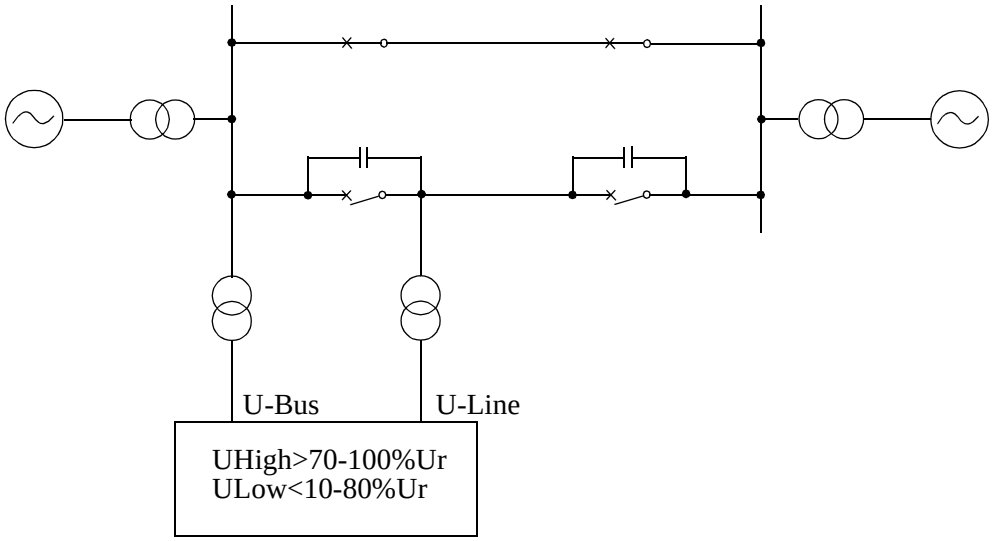

Figure 3: Principle for energising check.

The voltage level considered to be a non-energised bus or line is set on the HMI. An energising can occur — depending on the set direction of the energising function. There are separate settable limits for energised (live) condition, UHigh, and non-energised (dead) ULow conditions. The equipment is considered energised if the voltage is above the set value UHigh (e.g. 80% of base voltage), and non-energised if it is below the set value, ULow (e.g. 30% of the base voltage). The user can set the UHigh condition between 70-100% U1b and the ULow condition between 10-80% U1b.

A disconnected line can have a considerable potential due to, for instance, induction from a line running in parallel, or by being fed via the extinguishing capacitors in the circuit breakers. This voltage can be as high as 30% or more of the rated voltage of the line.

The energising operation can be set to operate in either direction over the circuit breaker, or it can be permitted to operate in both directions. Use the AutoEnerg and ManEnerg HMI setting to select the energising operation in:

- Both directions (Both)
- Dead line live bus (DLLB)
- Dead bus live line (DBLL)

The voltage check can also be set Off. A closing impulse is issued to the circuit breaker if one of the U-line or U-bus voltages is High and the other is Low, that is, when only one side is energised. The user can set AutoEnerg and ManEnerg to enable different conditions during automatic and manual closing of the circuit breaker.

In the manual mode it is also possible to allow closing when both sides of the breaker are dead. This is done by setting the parameter ManDBDL = “On” **and** ManEnerg to “DLLB”, “DBLL” or “Both”.

1.3 Voltage selection

The voltage selection function is used for the synchronisation and synchronism (SYNx) and energising check functions. When the terminal is used in a double bus, the voltage that should be selected depends on the positions of the breakers and/or disconnectors. By checking the position of the disconnectors and/or breakers auxiliary contacts, the terminal can select the right voltage for the synchronism and energising function. Select the type of voltage selection from the synchrocheck, Uselection, SingleBus or DbleBus on the HMI. When using voltage selection, an extra I/O-module is required.

The configuration of internal signal inputs and outputs may be different for different busbar systems, and the actual configuration for the substation must be done during engineering of the terminal.

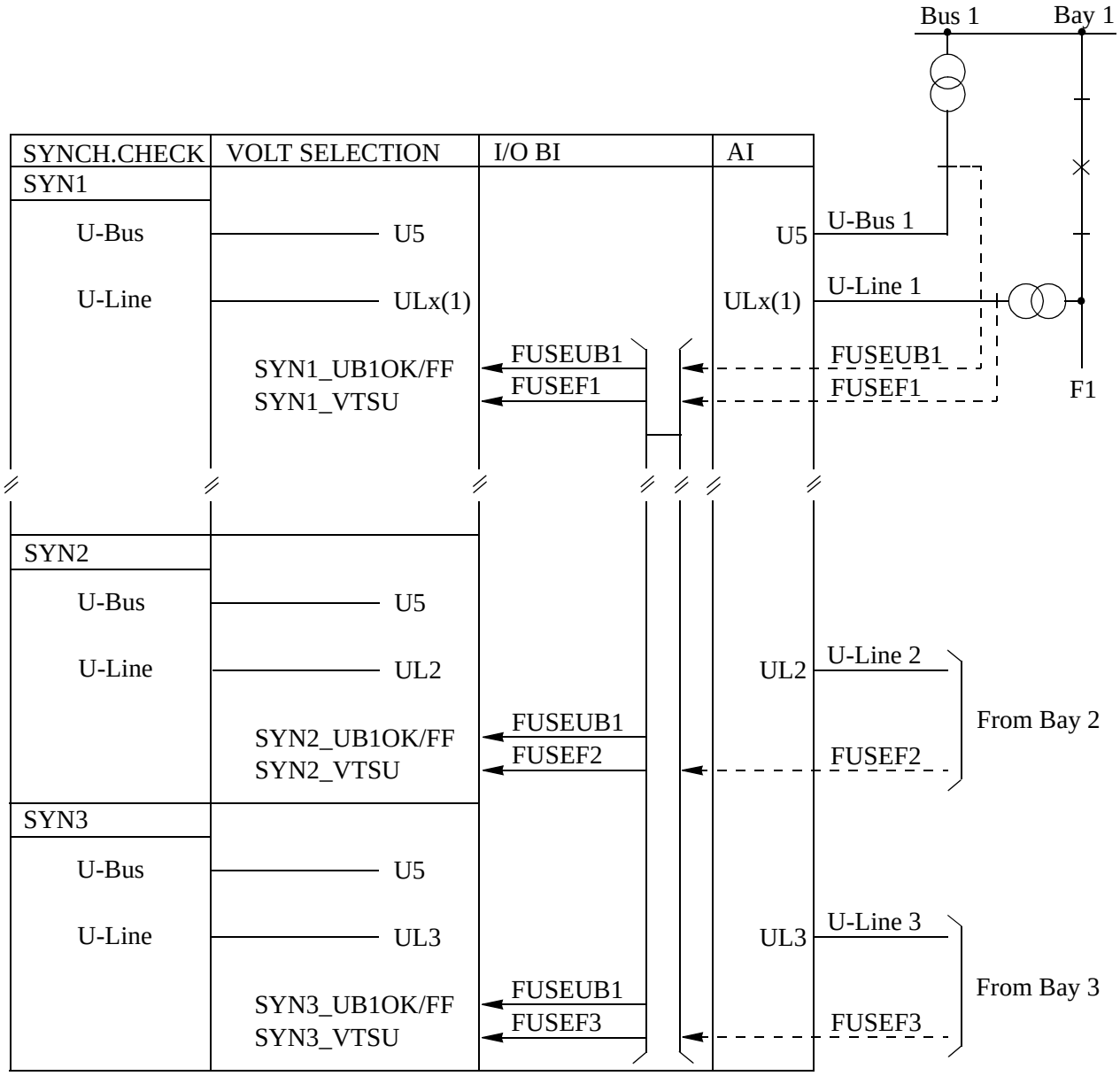

Figure 4: Voltage connection in a single busbar arrangement. Alternatively, it can be extended up to three bays in one terminal.

1.3.1 Voltage selection for a single busbar

Single bus is selected on the HMI. Figure 4: shows the principle for the connection arrangement. One terminal unit is used for each bay, or it can alternatively be common for three bays. For the synchrocheck (SYNx) and energising check function, there is one voltage transformer at each side of the circuit breaker. The voltage transformer circuit connections are straight forward, no special voltage selection is needed.

For the synchrocheck and energising check, the voltage from Bus 1 (SYNx-U-Bus) is connected to the single phase analogue input (U5) on the terminal unit.

For the terminal intended for one bay, the line voltage (SYN1-U-line 1) is connected as a three-phase voltage to the analogue inputs UL1, UL2, UL3 (ULx). For the version intended for three bays, the line voltages are connected as three single-phase inputs, UL1 for Bay 1, UL2 for Bay 2, and UL3 for Bay 3.

1.3.1.1 Fuse failure and Voltage OK signals

The external fuse-failure signals or signals from a tripped fuse switch/MCB are connected to binary inputs configured to inputs of the synchrocheck functions in the terminal. There are two alternative connection possibilities. Inputs named OK must be supplied if the voltage circuit is healthy. Inputs named FF must be supplied if the voltage circuit is faulty.

The SYNx-UB1OK and SYNx-UB1FF inputs are related to the busbar voltage. Configure them to the binary inputs that indicate the status of the external fuse failure of the busbar voltage. The SYNx-VTSU input is related to the line voltage from each line.

For the terminal that is intended for one bay, the user can use the FUSE-VTSU signal from the built-in optional selectable fuse-failure function as an alternative to the external fuse-failure signals.

In case of a fuse failure, the energising check (dead line-check) is blocked via the inputs (SYN1-UB1OK/FF or SYN1-VTSU).

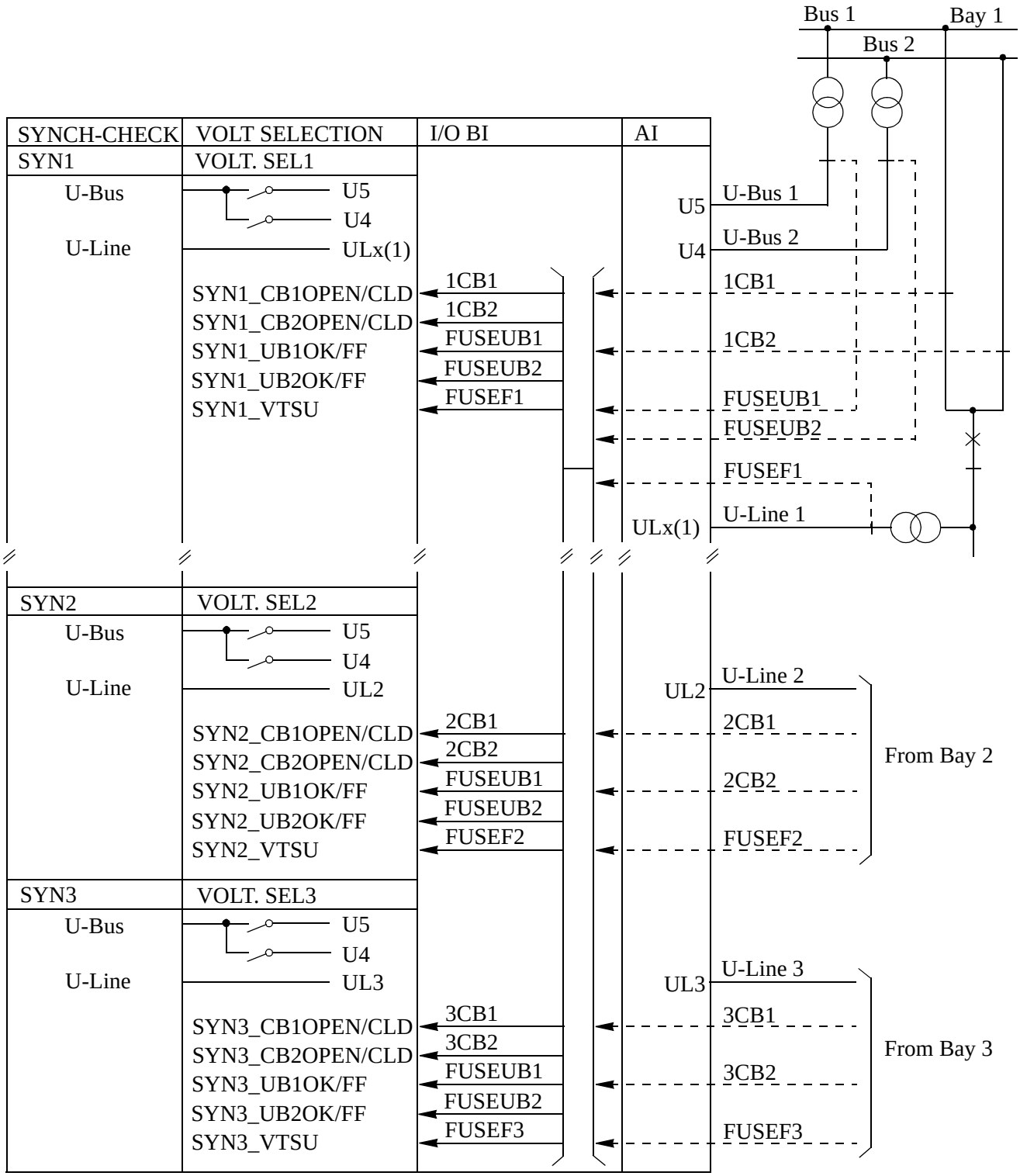

Figure 5: Voltage selection in a double bus arrangement. Alternatively it can be extended up to three bays in one terminal

1.3.2 Voltage selection for a double bus

Select DbleBus on the HMI. Figure 5: shows the principle for the connection arrangement. One terminal unit is used for each bay or it can alternatively be common for three bays. For the synchrocheck (SYNx) and energising check function, the voltages on the two busbars are selected by voltage selection (VOLT.SELx) in the terminal unit. The bus voltage from Bus 1 is fed to the U5 analogue single-phase input, and the bus voltage from Bus 2 is fed to the U4 analogue single-phase input. The line voltage transformers are connected as a three-phase voltage UL1, UL2, UL3 (ULx) to the input U-line. For the version intended for three bays, the line voltages are connected as three, single-phase inputs, UL1 for Bay1, UL2 for Bay2 and UL3 for Bay3.

The selection of the bus voltage is made by checking the position of the disconnectors' auxiliary contacts connected via binary inputs of the voltage selection logic inputs, SYNx-CB1OPEN (Disconnector section 1 open), SYNx-CB1CLD (Disconnector section 1 closed) and SYNx-CB2OPEN (Disconnector section 2 open), SYNx-CB2CLD (Disconnector section 2 closed).

1.3.2.1 Fuse failure and Voltage OK signals

The external fuse-failure signals or signals from a tripped fuse switch/MCB are connected to binary inputs configured to inputs of the synchrocheck functions in the terminal. There are two alternative connection possibilities. Inputs named OK must be supplied if the voltage circuit is healthy. Inputs named FF must be supplied if the voltage circuit is faulty.

The SYNx-UB1(2)OK and SYNx-UB1(2)FF inputs are related to each busbar voltage. The SYNx-VTSU input is related to each line voltage. Configure them to the binary inputs that indicate the status of the external fuse failure of the busbar respectively the line voltage. Only the fuse failure of a selected voltage causes a blocking of the relevant energising check unit.

For the terminal that is intended for one bay, you can use the FUSE-VTSU signal from the built-in optional selectable fuse-failure function as an alternative to the external fuse-failure signals.

In case of a fuse failure, the energising check (dead line-check) is blocked via the inputs (SYNx-UB1OK/FF, SYNx-UB2OK/FF or SYNx-VTSU).

2 Theory of operation

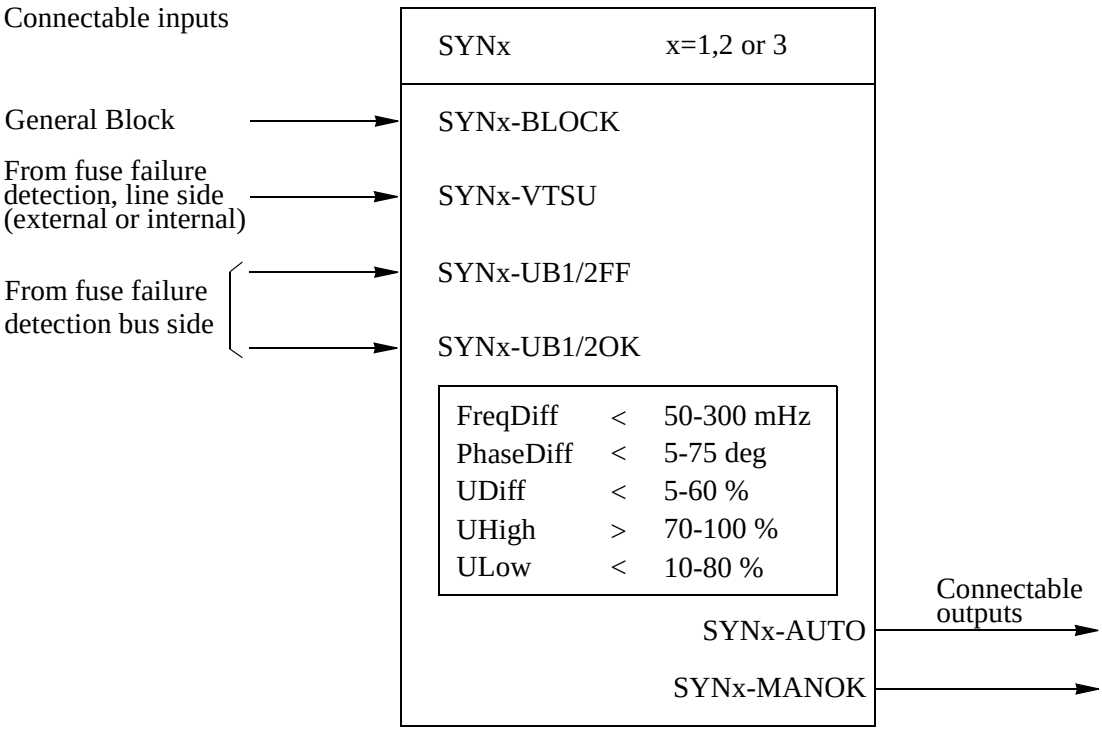

Figure 6: Input and output signals.

2.1 Synchrocheck

Description of input and output signals for the synchro-check function.

Input signals	Description
SYNx-BLOCK	General block input from any external condition, that should block the synchrocheck**.**
SYNx-VTSU	The SYNC function cooperates with the FUSE-VTSU connected signal, which is the built-in optional fuse failure detection. It can also be connected to external condition for fuse failure. This is a blocking condition for the energising function.
SYNx-UB1FF	External fuse failure input from busbar voltage Bus 1 (U5). This signal can come from a tripped fuse switch (MCB) on the secondary side of the voltage transformer. In case of a fuse failure the energising check is blocked.
SYNx-UB1OK	No external voltage fuse failure (U5). Inverted signal.

SYNx-UB2FF	External fuse failure input from busbar voltage Bus 2 (U4). This signal can come from a tripped fuse switch (MCB) on the secondary side of the voltage transformer. In case of a fuse failure the energising check is blocked.
SYNx-UB2OK	No external voltage fuse failure (U4). Inverted signal.
Output signals	**Description**
SYNx-AUTOOK	Synchrocheck/energising OK. The output signal is high when the synchrocheck conditions set on the HMI are fulfilled. It can also include the energising condition, if selected. The signal can be used to release the auto-recloser before closing attempt of the circuit breaker. It can also be used as a free signal.
SYNx-MANOK	Same as above but with alternative settings of the direction for energising to be used during manual closing of the circuit breaker.

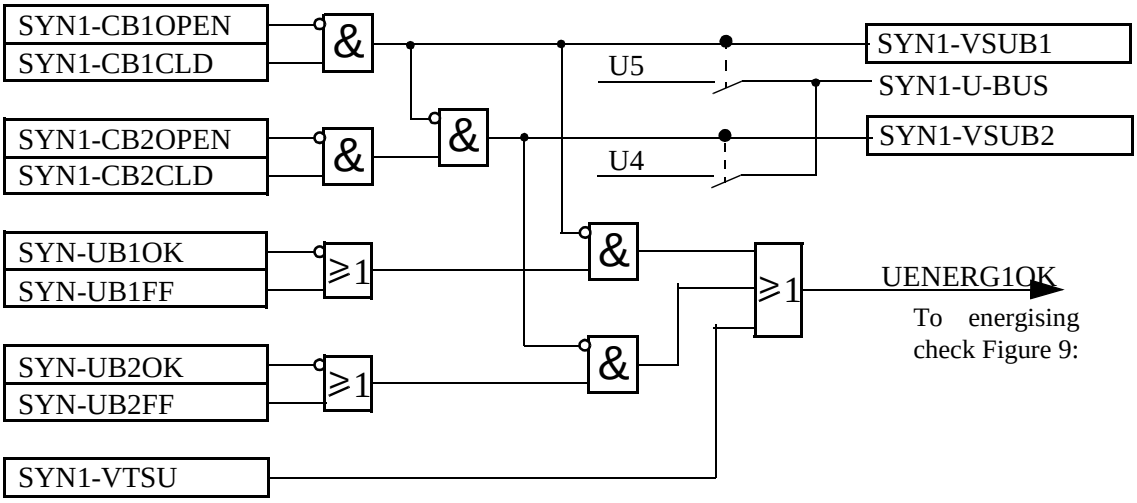

Figure 7: Voltage selection logic in a double bus, single breaker arrangement. In case of three bay arrangement the 1 in SYN1 and UENERG1OK are replaced by 2 and 3 in the logic.

2.2 Voltage selection

Description of the input and output signals shown in the above simplified logic diagrams for voltage selection:

Input signal	Description
SYNx-CB1OPEN	Disconnector section of Bay x open. Connected to the auxiliary contacts of a disconnector section in a double-bus, single- breaker arrangement, to inform the voltage selection about the positions.
SYNx-CB1CLD	Disconnector section of Bay x closed. Connected to the auxiliary contacts of a disconnector section in a double-bus, single-breaker arrangement to inform the voltage selection about the positions.
SYNx-CB2OPEN	Same as above but for disconnector section 2.
SYNx-CB2CLD	Same as above but for disconnector section 2.
SYNx-UB1FF	External fuse failure input from busbar voltage Bus 1 (U5). This signal can come from a tripped fuse switch (MCB) on the secondary side of the voltage transformer. In case of a fuse failure, the energising check is blocked.
SYNx-UB1OK	No external voltage fuse failure (U5). Inverted signal.
SYNx-UB2FF	External fuse failure input from busbar voltage Bus 2 (U4). This signal can come from a tripped fuse switch (MCB) on the secondary side of the voltage transformer. In case of fuse failure, the energising check is blocked.

SYNx-UB2OK	No external voltage fuse failure (U4). Inverted signal.
SYNx-VTSU	Internal fuse failure detection or configured to a binary input indicating external fuse failure of the UL1, UL2, UL3 line-side voltage. Blocks the energising function.

Output signals	**Description**
SYNx-VSUB1	Signal for indication of voltage selection from Bus 1 voltage.
SYNx-VSUB2	Signal for indication of voltage selection from Bus 1 voltage.

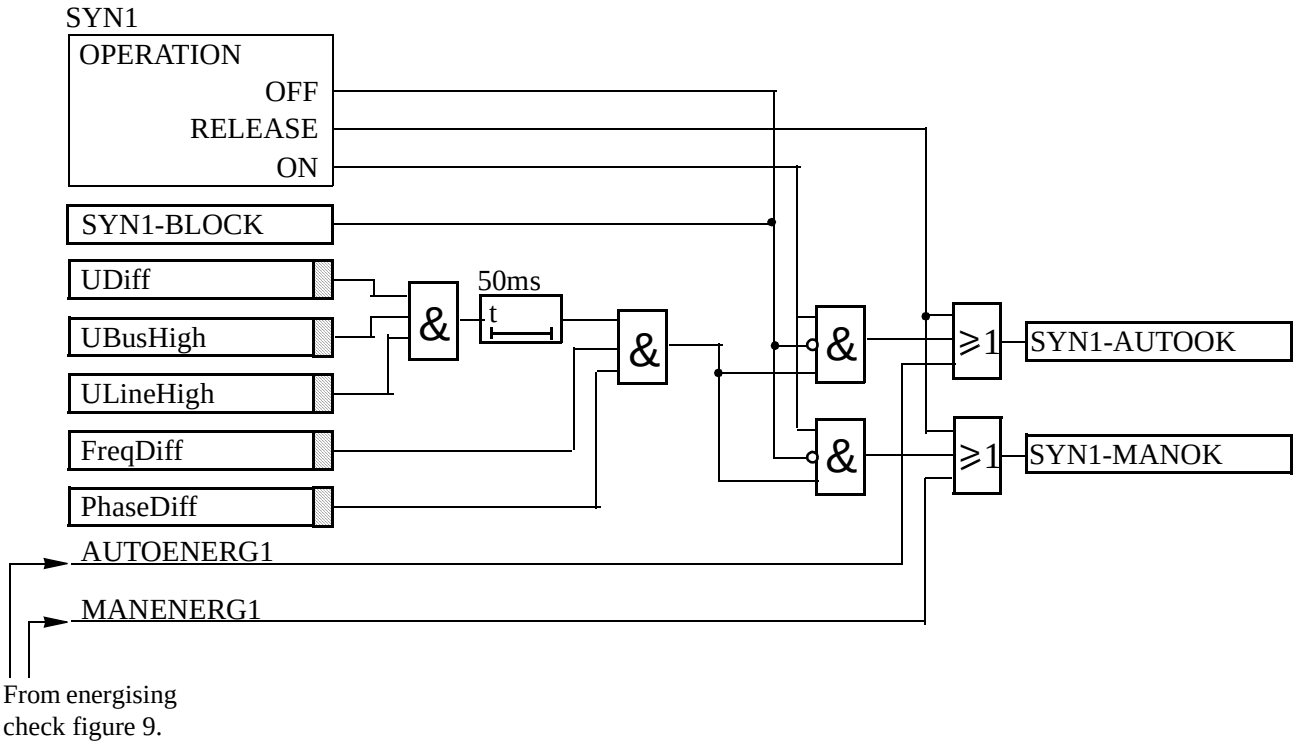

Figure 8: Simplified logic diagram - Synchrocheck.

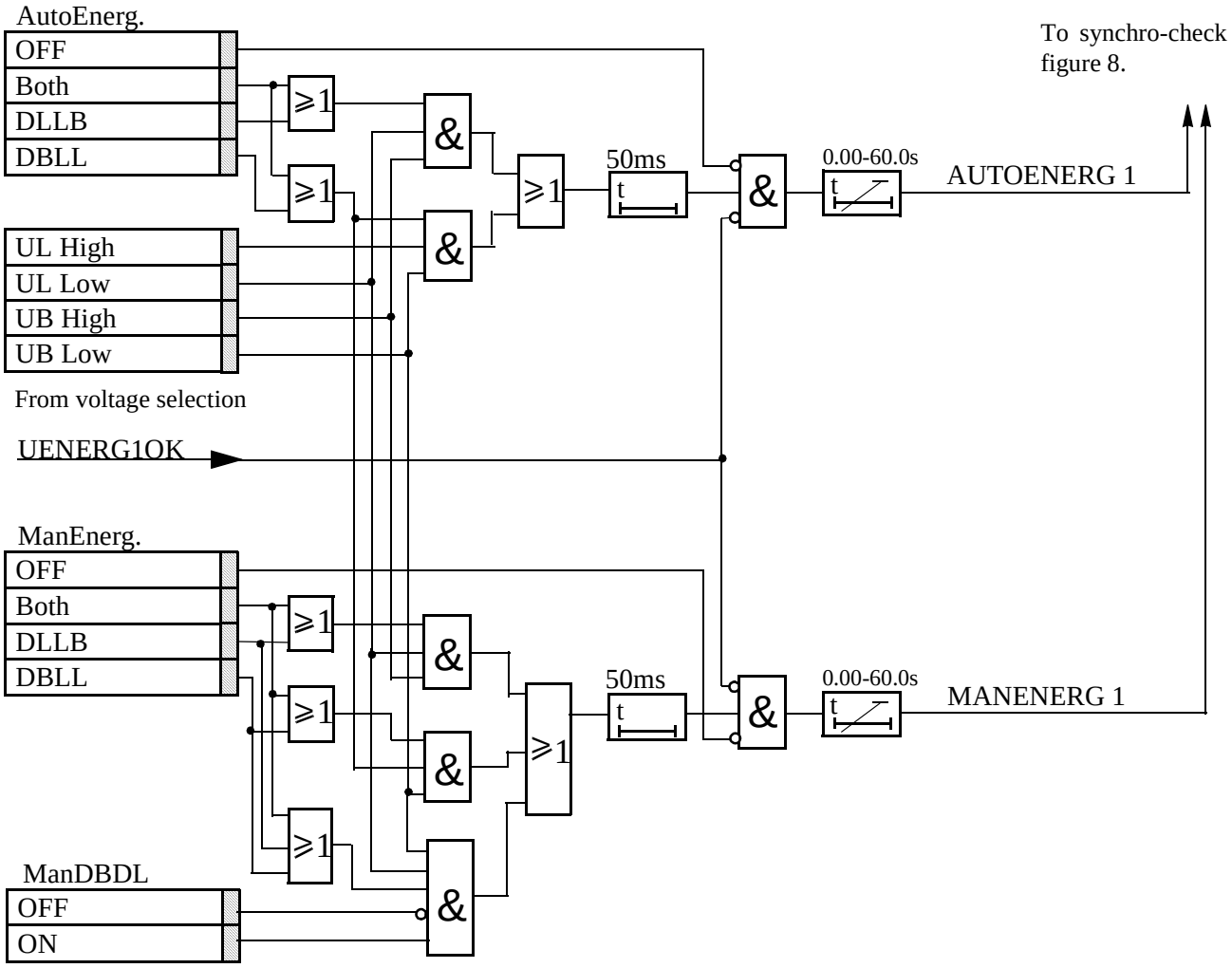

Figure 9: Simplified logic diagram - energising check.

3 Setting

The setting parameters are accessible through the HMI. The parameters for the synchrocheck function are found in the HMI tree under:

Settings
Functions
Group n
SynchroCheck
SynchroCheck n (n=1-3)

(The number of SynchroCheck functions is dependent of the version)

Comments regarding settings.

3.1 Operation

Off/Release/On

Off	The synchrocheck function is off and the output is low.
Release	There are fixed, high output signals SYN1-AUTOOK = 1 and SYN1-MANOK = 1.
On	The function is in service and the output signal depends on the input conditions.

3.2 Input phase

The measuring phase of the UL1, UL2, UL3 line voltage, which can be of a single-phase (phase-neutral) or two-phases (phase-phase). (Only available in terminals intended for one bay).

3.3 UMeasure

Selection of single-phase (phase-neutral) or two-phase (phase-phase) measurement.(Only available in terminals intended for several bays).

3.4 PhaseShift

This setting is used to compensate for a phase shift caused by a line transformer between the two measurement points for UBus and ULine. The set value is added to the measured phase difference. The bus voltage is reference voltage.

3.5 URatio

The URatio is defined as URatio=UBus/ULine. A typical use of the setting is to compensate for the voltage difference caused if one wishes to connect the UBus phase-phase and ULine phase-neutral. The “Input phase”-setting should then be set to phase-phase and the “URatio”-setting to sqr3=1.732. This setting scales up the line voltage to equal level with the bus voltage.

3.6 USelection

Selection of single or double bus voltage-selection logic.

3.7 AutoEnerg and ManEnerg

Two different settings can be used for automatic and manual closing of the circuit breaker.

Off	The energising function is Off
DLLB	The line voltage U-line is low, below (10-80% U1b) and the bus voltage U-bus is high, above (70-100% U1b).
DBLL	The bus voltage U-bus is low, below (10-80% U1b) and the line voltage U-line is high, above (70-100% U1b).
Both	Energising can be done in both directions, DLLB or DBLL.
tAutoEnerg	The required consecutive time of fulfillment of the energising condition to achieve SYN1-AUTOOK.
tManEnerg	The required consecutive time of fulfillment of the energising condition to achieve SYN1-MANOK.

3.8 ManDBDL

If the parameter is set to “On”, closing is enabled when Both U-Line and U-bus are below ULow and ManEnerg is set to “DLLB”, “DBLL” or “Both”.

4 Testing

At periodical checks, the functions should preferably be tested with the used settings. To test a specific function, it might be necessary to change some setting parameters, for example:

- AutoEnerg = On/Off/DLLB/DBLL/Both
- ManEnerg = Off
- Operation = Off, On

The tests explained in section “Synchro-check tests” on page 356 describe the settings, which can be used as references during testing, are presented before the final settings are specified. After testing, restore the equipment to the normal or desired settings.

4.1 Test equipment

A secondary injection test set with the possibility to alter the phase angle by regulation of the resistive and reactive components is needed. Here, the phase angle meter is also needed. To perform an accurate test of the frequency difference, a frequency generator at one of the input voltages is needed. The tests can also be performed with the computer-aided test system FREJA which has a specially designed program for evaluating the synchro-check function.
Figure 10: shows the general test connection principle, which can be used during testing.

This description describes the test of the version intended for one bay.

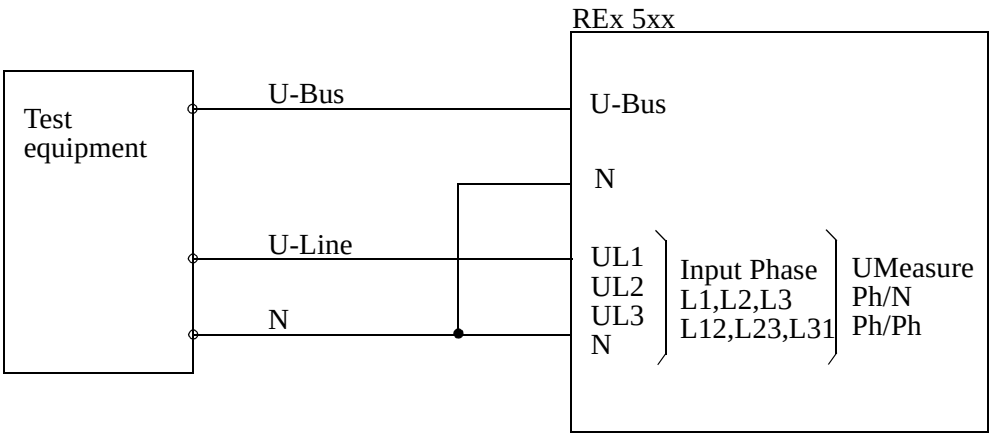

Figure 10: General test connection for synchro-check with three-phase voltage connected to the line side.

4.2 Synchro-check tests

4.2.1 Test of voltage difference

Set the voltage difference at 30% U1b on the HMI, and the test should verify that operation is achieved when the voltage difference UDiff is lower than 30% U1b.

These voltage inputs are used:

U-line UL1, UL2 or UL3 voltage input on the terminal.

U-bus U5 voltage input on the terminal

These HMI settings can be used during the test if the final setting is not determined:

1 Set these HMI settings, which are found under:

Settings
Functions
Group n
SynchroCheck
SynchroCheck1

Table 1:

Parameter:	Setting:
Operation	On
InputPhase	UL1
USelection	SingleBus
PhaseShift	0 deg
URatio	1.00
AutoEnerg	Off
ManEnerg	Off
ManDBDL	Off
UHigh	70% U1b
ULow	40% U1b
FreqDiff	0.05 Hz
PhaseDiff	45°
UDiff	30% U1b
tAutoEnerg	0.5 s
tManEnerg	0.5 s

2 **Test with UDiff = 0%**

- Apply voltages U-line (UL1) = 80% U1b and U-Bus (U5) = 80% U1b with no frequency or phase difference.
- Check that the SYN1-AUTOOK and SYN1-MANOK outputs are activated.
- The test can be repeated with different voltage values to verify that the function operates within UDiff <30%.

3 **Test with UDiff = 40%**

- Increase the U-bus (U5) to 120% U1b, and the U-line (UL1) = 80% U1b.

- Check that the two outputs are **NOT** activated.

4 **Test with UDiff = 20%, Uline < UHigh**
- Decrease the U-line (UL1) to 60% U1b and the U-bus (U5) to be equal to 80% U1b.
- Check that the two outputs are **NOT** activated.

5 **Test with URatio=0.20**
- Run the test under section 2 to 4 but with U-bus voltages 5 times lower.

6 **Test with URatio=5.00**
- Run the test under section 2 to 4 but with U-line voltages 5 times lower.

4.2.2 Test of phase difference

The phase difference is set at 45° on the HMI, and the test should verify that operation is achieved when the PhaseDiff (phase difference) is lower than 45°.

1 Set these HMI settings:

Table 2: Test settings for phase difference

Parameter:	Setting:
Operation	On
InputPhase	UL1
USelection	SingleBus
PhaseShift	0 deg
URatio	1.00
AutoEnerg	Off
ManEnerg	Off
ManDBDL	Off
UHigh	70% U1b
ULow	40% U1b
FreqDiff	0.05 Hz
PhaseDiff	45°
UDiff	15% U1b
tAutoEnerg	0.5 s
tManEnerg	0.5 s

2 **Test with PhaseDiff = 0°**
Apply voltages U-line (UL1) = 100% U1b and U-bus (U5) = 100% U1b, with no frequency or phase difference.
Check that the SYN1-AUTOOK and SYN1-MANOK outputs are activated.

By changing the phase angle on U1 connected to U-bus, between +/-45° you can check that the two outputs are activated for a PhaseDiff lower than 45°. It should not operate for other values. See Figure 11:.

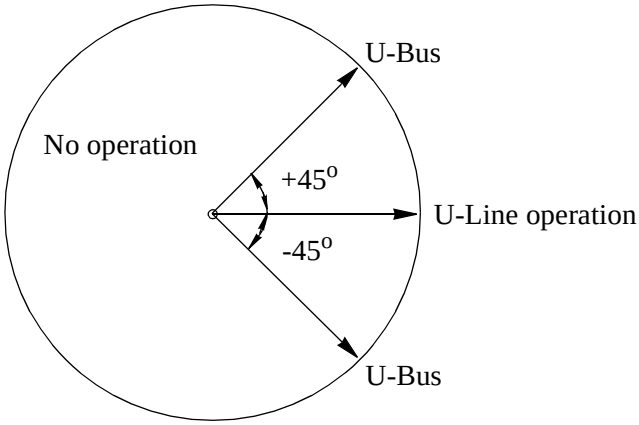

Figure 11: Test of phase difference.

4 Apply a PhaseShift setting of 10 deg. Change the phase angle between +55 and -35 and verify that the two outputs are activated for phase differences between these values but not for phase differences outside. See Figure 12:.

Change the PhaseShift setting to 350 deg. Change the phase angle between +35 and -55 and verify as above.

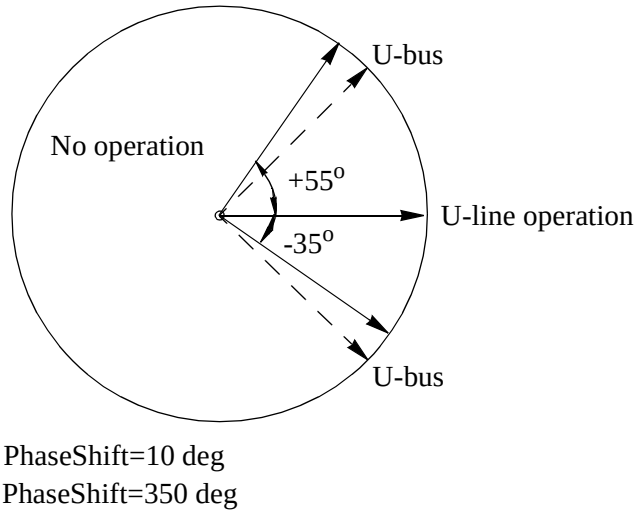

Figure 12: Test of phase difference.

4.2.3 Test of frequency difference

The frequency difference is set at 50 mHz on the HMI, and the test should verify that operation is achieved when the FreqDiff frequency difference is lower than 50 mHz.

1 Use the same HMI setting as in section “Test of phase difference” on page 358.

2 **Test with FreqDiff = 0 mHz**
Apply voltages U-Line (UL1) equal to 100% U1b and U-Bus (U5) equal to 100% U1b, with a frequency difference equal to 0 mHz and a phase difference lower than 45°. Check that the SYN1-AUTOOK and SYN1-MANOK outputs are activated.

3 **Test with FreqDiff = 1Hz**
Apply voltage to the U-line (UL1) equal to 100% U1b with a frequency equal to 50 Hz and voltage U-bus (U5) equal to 100% U1b, with a frequency equal to 49 Hz.
Check that the two outputs are **NOT** activated.

4 The test can be repeated with different frequency values to verify that the function operates for values lower than the set ones. If the FREJA program, Test of synchronising relay, is used the frequency can be changed continuously.

Note that a frequency difference also implies a floating mutual-phase difference. So the SYN1-AUTOOK and SYN1-MANOK outputs might NOT be stable, even though the frequency difference is within set limits, because the phase difference is not stable!

4.2.4 Test of reference voltage

1 Use the same basic test connection as in Figure 10:. The UDiff between the voltage connected to U-bus and U-line should be 0%, so that the SYN1-AUTOOK and SYN1-MANOK outputs are activated first.
Change the U-Line voltage connection to UL2 without changing the setting on the HMI
Check that the two outputs are **NOT** activated.

2 The test can also be repeated by moving the U-line to the UL3 input.

4.3 Test of energising check

Use these voltage inputs:

U-line = UL1, UL2 or UL3 voltage input on the terminal.

U-bus = U5 voltage input on the terminal.

4.3.1 Test of dead line live bus (DLLB)

The test should verify that the energising function operates for a low voltage on the U-Line and for a high voltage on the U-bus. This corresponds to an energising of a dead line to a live bus.

Use these HMI settings during the test if the final setting is not determined.

1 Set these HMI settings:

Table 3: Test settings for DLLB

Parameter:	Setting:
Operation	On
InputPhase	UL1
USelection	SingleBus
PhaseShift	0 deg
URatio	1.00
AutoEnerg	DLLB
ManEnerg	DLLB
ManDBDL	Off
UHigh	80% U1b
ULow	40% U1b
FreqDiff	0.05 Hz
PhaseDiff	45°
UDiff	15% U1b
tAutoEnerg	0.5 s
tManEnerg	0.5 s

2 Apply a single-phase voltage 100% U1b to the U-bus (U5), and a single-phase voltage 30% U1b to the U-line (UL1).

3 Check that the SYN1-AUTOOK and SYN1-MANOK outputs are activated.

4 Increase the U-Line (UL1) to 60% U1b and U-Bus(U5) to be equal to 100% U1b. The outputs should **NOT** be activated.

5 The test can be repeated with different values on the U-Bus and the U-Line.

4.3.2 Dead bus live line (DBLL)

The test should verify that the energising function operates for a low voltage on the U-bus and for a high one on the U-line. This corresponds to an energising of a dead bus from a live line.

1 Change the HMI settings AutoEnerg and ManEnerg to DBLL**.**

2 Apply a single-phase voltage of 30% U1b to the U-bus (U5) and a single-phase voltage of 100% U1b to the U-line (UL1).

3 Check that the SYN1-AUTOOK and SYN1-MANOK outputs are activated.

4 Decrease the U-line to 60% U1b and keep the U-bus equal to 30% U1b.
The outputs shall **NOT** be activated.

5 The test can be repeated with different values on the U-bus and the U-line.

4.3.3 Energising in both directions (DLLB or DBLL)

1 Change the HMI settings AutoEnerg and ManEnerg to Both.

2 Apply a single-phase voltage of 30% U1b to the U-line (UL1) and a single-phase voltage of 100% U1b to the U-bus (U5).

3 Check that the “SYN1-AUTOOK” and “SYN1-MANOK” outputs are activated.

4 Change the connection so that the U-line (UL1) is equal to 100% U1b and the U-bus (U5) is equal to 30% U1b.

5 The outputs should still be activated.

6 The test can be repeated with different values on the U-bus and the U-line.

7 Restore the equipment to normal or desired settings.

4.3.4 Dead bus Dead line (DBDL)

The test should verify that the energising function operates for a low voltage on both the U-bus the U-line, i.e closing of the breaker in a non energised system.

1 Set AutoEnerg to Off and ManEnerg to DBLL.

Set ManDBDL to On.

2 Apply a single-phase voltage of 30% U1b to the U-bus (U5) and a single-phase voltage of 30% U1b to the U-line (UL1).

3 Check that the SYN1-MANOK output is activated.

4 Increase the U-bus to 80% U1b and keep the U-line equal to 30% U1b.

The outputs shall **NOT** be activated.

5 Repeat the test with ManEnerg set to DLLB and Both, and different values on the U-bus and the U-line.

4.4 Test of voltage selection

This test should verify that the correct voltage is selected for the measurement in the energising function used in a double-bus arrangement. Apply a single-phase voltage of 30% U1b to the U-line (UL1) and a single-phase voltage of 100% U1b to the U-bus (U5).

If the SYN1-UB1/2OK inputs for the fuse failure are used, normally they must be activated, thus activated and deactivated must be inverted in the description of tests below.

1 Set these HMI settings:

Table 4: Test settings for voltage selection

Parameter	Setting
Operation	On
InputPhase	UL1
USelection	DbleB
PhaseShift	0 deg
URatio	1.00
AutoEnerg	Both
ManEnerg	Both
ManDBDL	Off
UHigh	80% U1b
ULow	40% U1b
FreqDiff	0,05 Hz
PhaseDiff	45°
UDiff	15% U1b
tAutoEnerg	0.5 s
tManEnerg	0.5 s

2 Connect the signals below to binary inputs and binary outputs. Apply signals according to the table and verify that correct output signals are generated.

Table 5: Signals

VOLTAGE FROM BUS1 U5	VOLTAGE FROM BUS2 U4	BINARY INPUTS	CB1OPEN	CB1CLD	CB2OPEN	CB2CLD	UB1FF	UB2FF	VTSU	BINARY OUTPUTS	AUTOOK	MANOK	VSUB1	VSUB2
1	0		1	0	1	0	0	0	0		1	1	1	0
1	0		0	1	1	0	0	0	0		1	1	1	0
1	0		0	1	1	0	1	0	0		0	0	1	0
1	0		0	1	1	0	0	1	0		1	1	1	0
1	0		0	1	1	0	0	0	1		0	0	1	0
1	0		0	1	0	1	0	0	0		1	1	1	0
1	0		1	0	0	1	0	0	0		0	0	0	1
0	1		0	1	1	0	0	0	0		0	0	1	0
0	1		0	1	0	1	0	0	0		0	0	1	0
0	1		1	0	0	1	0	0	0		1	1	0	1
0	1		1	0	0	1	1	0	0		1	1	0	1
0	1		1	0	0	1	0	1	0		0	0	0	1
0	1		1	0	0	1	0	0	1		0	0	0	1
0	1		0	1	0	1	0	0	0		0	0	1	0

5 Appendix

5.1 Function block

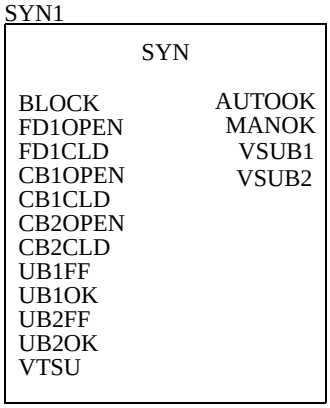

5.2 Signal list

Block	Signal	Type	Description
SYNx-	BLOCK	IN	Block of synchrocheck function x (x=1-3)
SYNx-	FD1OPEN	IN	Feeder disconnector 1 open
SYNx-	FD1CLD	IN	Feeder disconnector 1 closed
SYNx-	CB1OPEN	IN	Breaker section 1 open
SYNx-	CB1CLD	IN	Breaker section 1 closed
SYNx-	CB2OPEN	IN	Breaker section 2 open
SYNx-	CB2CLD	IN	Breaker section 2 closed
SYNx-	UB1FF	IN	External voltage fuse failure, bus 1
SYNx-	UB1OK	IN	External voltage fuse healthy, bus 1
SYNx-	UB2FF	IN	External voltage fuse failure, bus 2
SYNx-	UB2OK	IN	External voltage fuse healthy, bus 2
SYNx-	VTSU	IN	Block from internal fuse failure supervision or from external fuse failure of the line voltage.
SYNx-	AUTOOK	OUT	Automatic synchronism/energising check OK
SYNx-	MANOK	OUT	Manual synchronism/energising check OK
SYNx-	VSUB1	OUT	Voltage selection from bus 1
SYNx-	VSUB2	OUT	Voltage selection from bus 2

5.3 Setting table

Parameter	Range	Unit	Default	Parameter description
Operation	Off, Release, On		Off	Synchrocheck function Off/Release/On
InputPhase	L1, L2, L3, L1-L2, L2-L3, L3-L1		L1	Select input voltage
UMeasure	Ph/N, Ph/Ph		Ph/N	Select input voltage Ph/N or Ph/Ph
PhaseShift	0-360	degrees	0	Phase shift between U-bus and U-line
URatio	0.20-5.00		1.00	Voltage ratio between U-bus and U-line
USelection	SingleBus, DbleBus		Single-Bus	Bus arrangement for voltage selection
AutoEnerg	Off, DLLB, DBLL, Both		Off	Auto energising/synchronising method
ManEnerg	Off, DLLB, DBLL, Both		Off	Manual energising/synchronising method
ManDBDL	Off, On		Off	Manual dead bus and dead line energising
UHigh	50-120	%	80	High voltage limit, as a percentage of Ub
ULow	10-100	%	40	Low voltage limit, as a percentage of Ub
FreqDiff	0.05-0.30	Hz	0.20	Frequency difference limit
PhaseDiff	5-75	degrees	20	Phase difference limit
UDiff	5-50	%	20	Voltage difference limit, as a percentage of Ub
tAutoEnerg	0.000-60.000	s	0.100	Auto energising time delay period
tManEnerg	0.000-60.000	s	0.100	Manual energising time delay period

1 Application

1.1 Synchrocheck

The synchrocheck function is used for controlled closing of a circuit in an interconnected network. When used, the function gives an enable signal at satisfied voltage conditions across the breaker to be closed. When there is a parallel circuit established, the frequency is normally the same at the two sides of the open breaker. At power swings, e.g. after a line fault, an oscillating difference can appear. Across the open breaker, there can be a phase angle and a voltage amplitude difference due to voltage drop across the parallel circuit or circuits. The synchrocheck function measures the difference between the U-line and the U-bus, regarding voltage (UDiff), phase angle (PhaseDiff), and frequency (FreqDiff). It operates and permits closing of the circuit breaker when these conditions are simultaneously fulfilled.

- The voltages U-line and U-bus are higher than the set value for UHigh of the base voltage U1b.
- The differences in the voltage and phase angles are smaller than the set values of UDiff and PhaseDiff.
- The difference in frequency is less than the set value of FreqDiff. The bus frequency must also be within a range of ±5 Hz from the rated frequency.

The function can be used as a condition to be fulfilled before the breaker is closed at manual closing and/or together with the auto-recloser function.

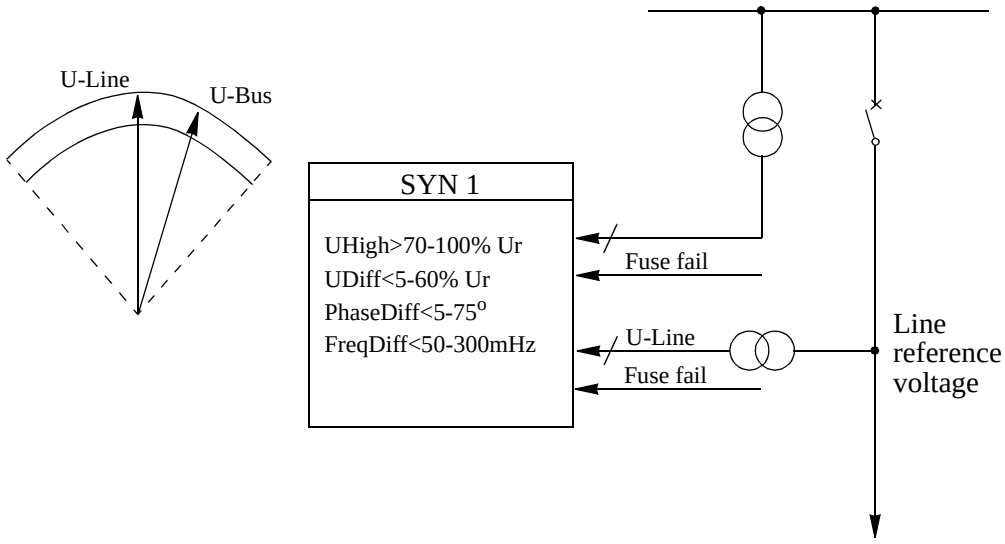

Figure 1: Synchrocheck

The voltage circuits are arranged differently depending on the number of synchrocheck functions that are included in the terminal.

In terminals intended for one bay the U-line voltage reference phase is selected on the human-machine interface (HMI). The reference voltage can be single-phase L1, L2, L3 or phase-phase L1-L2, L2-L3, L3-L1. The U-bus voltage must then be connected to the same phase or phases as are chosen on the HMI. Figure 2: shows the voltage connection.

In terminals intended for several bays, all voltage inputs are single phase circuits. The voltage can be selected for single phase or phase-to-phase measurement on the HMI. All voltage inputs must be connected to the same phase or phases.

The circuit breaker can be closed when the conditions for FreqDiff, PhaseDiff, and UDiff are fulfilled with the UHigh condition.

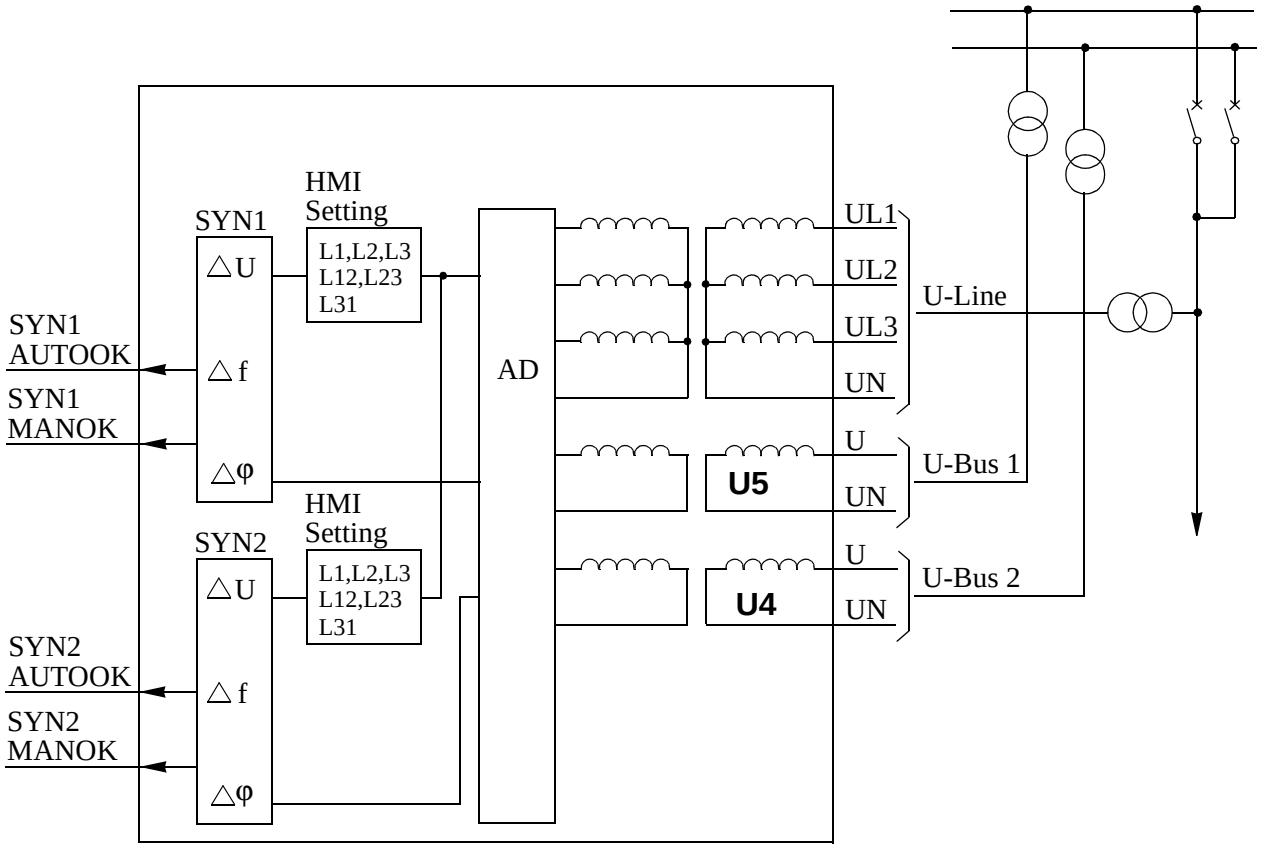

Figure 2: Connection of the synchrocheck function for one bay

1.2 Energising check

The energising check is made when a disconnected line is to be connected to an energised section of a network, see Figure 3:. The check can also be set to allow energisation of the busbar or in both directions.

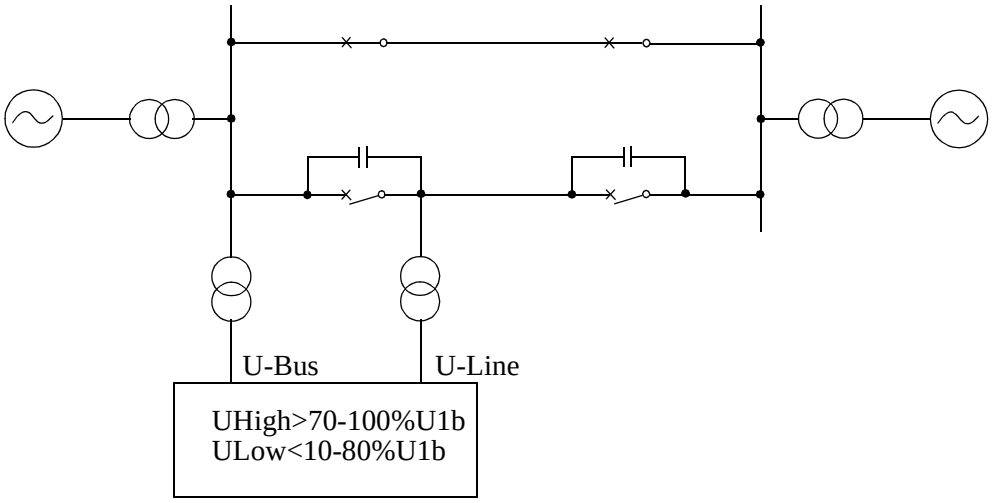

Figure 3: Principle for energising check.

The voltage level considered to be a non-energised bus or line is set on the HMI. An energising can occur — depending on the set direction of the energising function. There are separate settable limits for energised (live) condition, UHigh, and non-energised (dead) ULow conditions. The equipment is considered energised if the voltage is above the set value UHigh (e.g. 80% of the base voltage), and non-energised if it is below the set value, ULow (e.g. 30% of the base voltage) The user can set the UHigh condition between 70-100% U1b and the ULow condition between 10-80% U1b.

A disconnected line can have a considerable potential due to, for instance, induction from a line running in parallel, or by being fed via the extinguishing capacitors in the circuit breakers. This voltage can be as high as 30% or more of the rated voltage of the line.

The energising operation can be set to operate in either direction over the circuit breaker, or it can be permitted to operate in both directions. Use the AutoEnerg and ManEnerg HMI setting to select the energising operation in:

- Both directions (Both)
- Dead line live bus (DLLB)
- Dead bus live line (DBLL)

The voltage check can also be set Off. A closing impulse is issued to the circuit breaker if one of the U-line or U-bus voltages is High and the other is Low, that is, when only one side is energised. The user can set AutoEnerg and ManEnerg to enable different conditions during automatic and manual closing of the circuit breaker.

In the manual mode it is also possible to allow closing when both sides of the breaker are dead. This is done by setting the parameter ManDBDL = “On” **and** ManEnerg to “DLLB”, “DBLL” or “Both”.

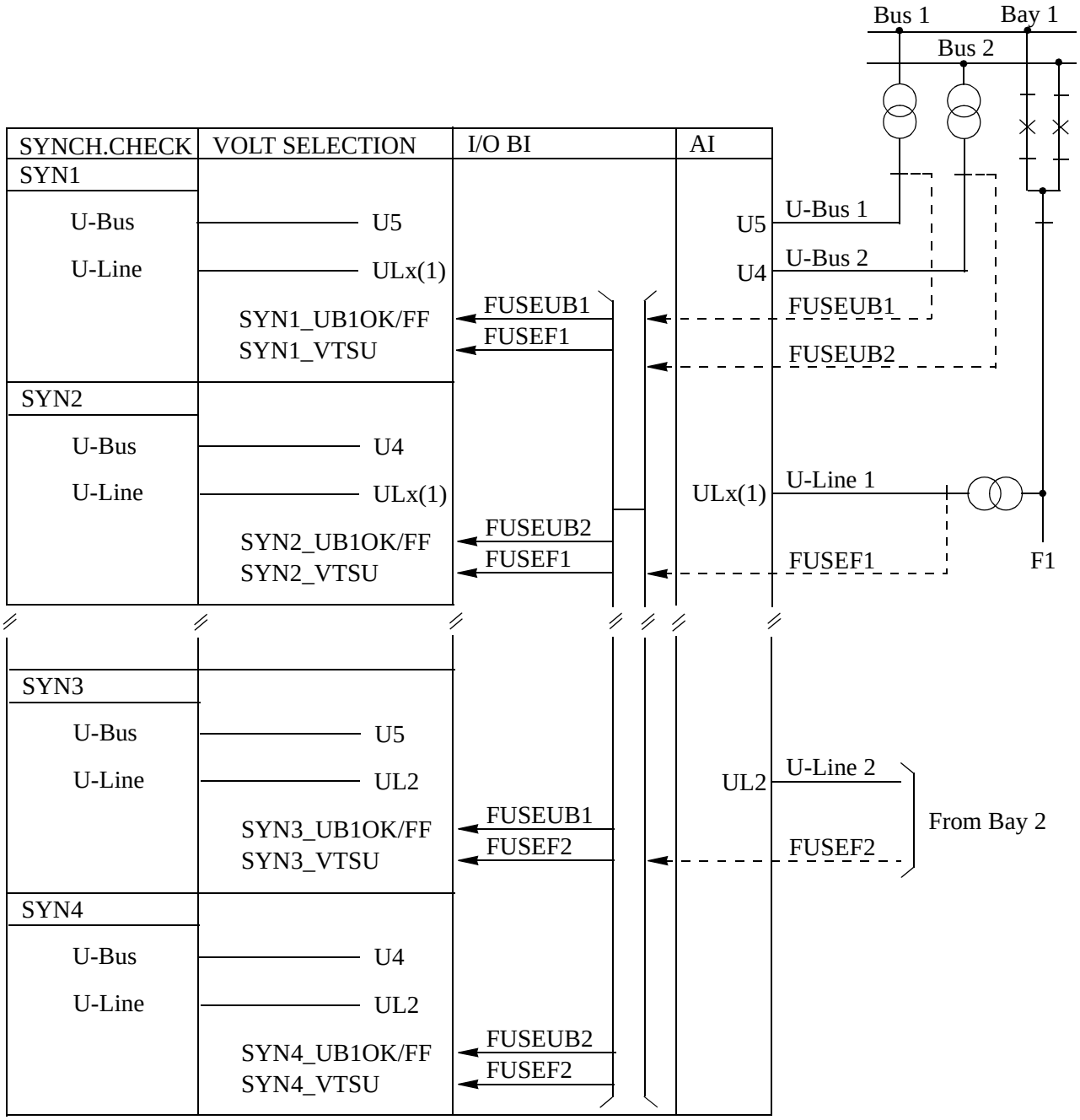

Figure 4: Voltage connection in a double busbar double breaker arrangement. Alternatively, it can be extended up to two bays in one terminal

1.3 Voltage connection

The principle for the connection arrangement is shown in Figure 4:. One terminal is used for the two circuit breakers in one or two bays dependent of selected option. There is one voltage transformer at each side of the circuit breaker, and the voltage transformer circuit connections are straightforward, without any special voltage selection.

For the synchrocheck and energising check, the voltage from Bus 1 (SYN1(3)-U-bus) is connected to the single-phase analogue input (U5) on the terminal and the voltage from Bus 2 (SYN2(4)-U-bus) is connected to the single-phase analogue input (U4).

For the terminal intended for one bay the line voltage transformers are connected as a three-phase voltage to the analogue inputs UL1, UL2, UL3 (ULx) (SYN1(2)-U-Line) voltage. For the version intended for two bays the line voltages are connected as two single phase inputs, UL1 for Bay 1 and UL2 for Bay 2

The synchronism condition is set on the HMI of the terminal, and the voltage is taken from Bus 1 and the Line or from Bus 2 and the Line (U-line). This means that the two synchrocheck units are operating without any special voltage selection, but with the same line (U-line) voltage.

The configuration of internal signals, inputs, and outputs may be different for different busbar systems, and the actual configuration for the substation must be done during engineering of the terminal.

1.3.1 Fuse failure and Voltage OK signals

The external fuse-failure signals or signals from a tripped fuse switch/ MCB are connected to binary inputs configured to inputs of the synchrocheck functions in the terminal. There are two alternative connection possibilities. Inputs named OK must be supplied if the voltage circuit is healthy. Inputs named FF must be supplied if the voltage circuit is faulty.

The SYNx-UB1OK and SYNx-UB1FF inputs are related to the busbar voltage. Configure them to the binary inputs that indicate the status of the external fuse failure of the busbar voltage. The SYNx-VTSU input is related to the line voltage from each line.

The user can use the FUSE-VTSU signal from the built-in optional selectable fuse-failure function as an alternative to the external fuse-failure signals.

In case of a fuse failure, the energising check (dead line check) is blocked via the inputs (SYN1-UB1OK/FF orSYN1-VTSU).

2 Theory of operation

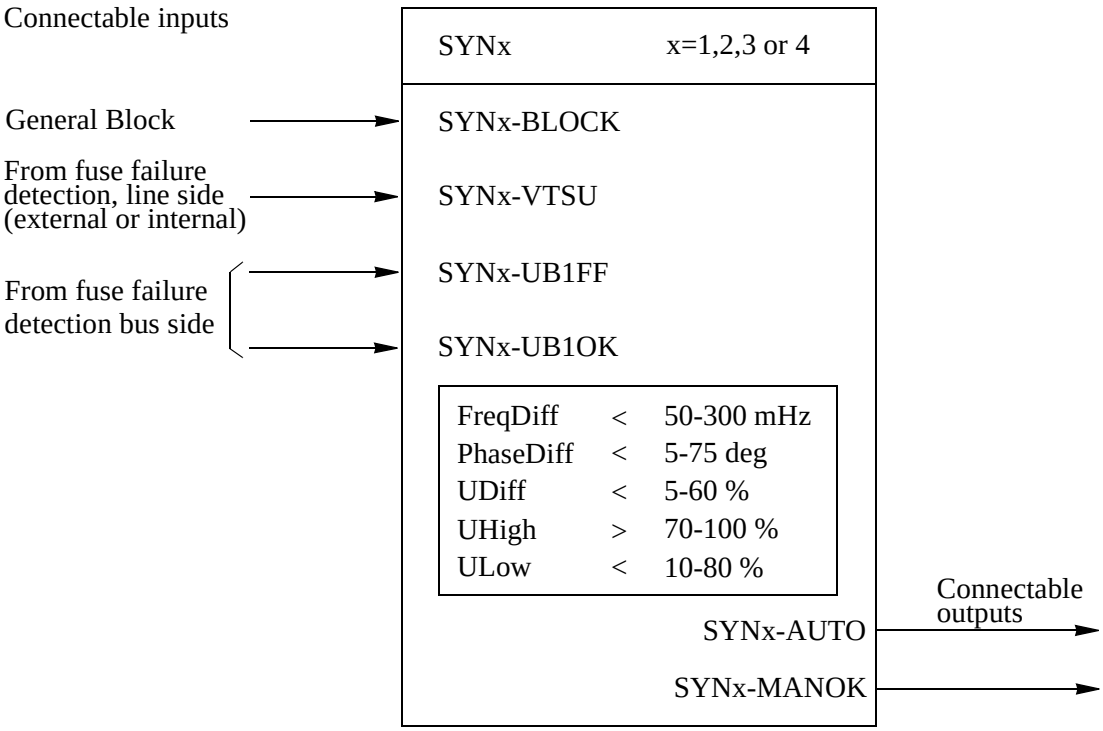

Figure 5: Input and output signals.

2.1 Synchro-check

Description of input and output signals for the synchrocheck function.

Input signals	Description
SYNx-BLOCK	General block input from any external condition, that should block the synchrocheck.
SYNx-VTSU	The SYNC function cooperates with the FUSE-VTSU connected signal, which is the built-in optional fuse failure detection. It can also be connected to external condition for fuse failure. This is a blocking condition for the energising function.
SYNx-UB1FF	External fuse failure input from busbar voltage Bus 1 (U5). This signal can come from a tripped fuse switch (MCB) on the secondary side of the voltage transformer. In case of a fuse failure the energising check is blocked.
SYNx-UB1OK	No external voltage fuse failure (U5). Inverted signal.

Output signals	Description
SYNx-AUTOOK	Synchrocheck/energising OK. The output signal is high when the synchrocheck conditions set on the HMI are fulfilled. It can also include the energising condition, if selected. The signal can be used to release the auto-recloser before closing attempt of the circuit breaker. It can also be used as a free signal.
SYNx-MANOK	Same as above but with alternative settings of the direction for energising to be used during manual closing of the circuit breaker.

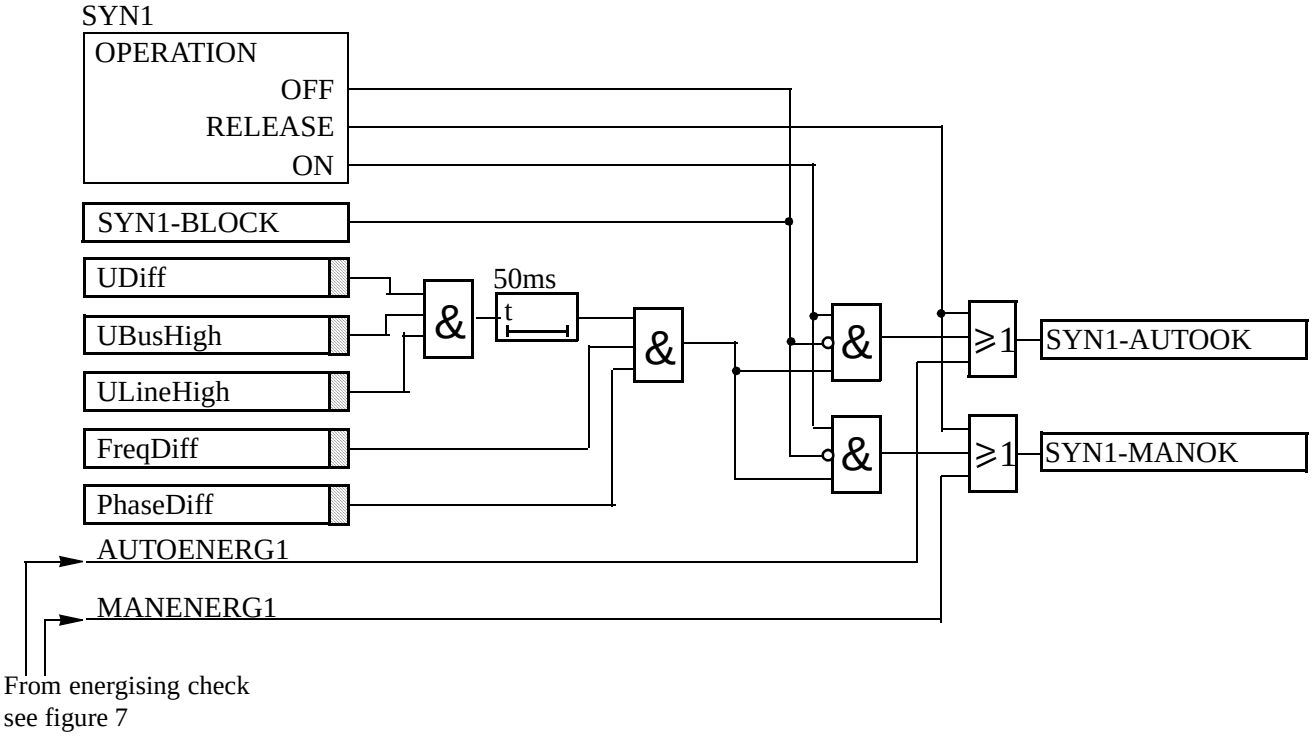

Figure 6: Simplified logic diagram - Synchrocheck.

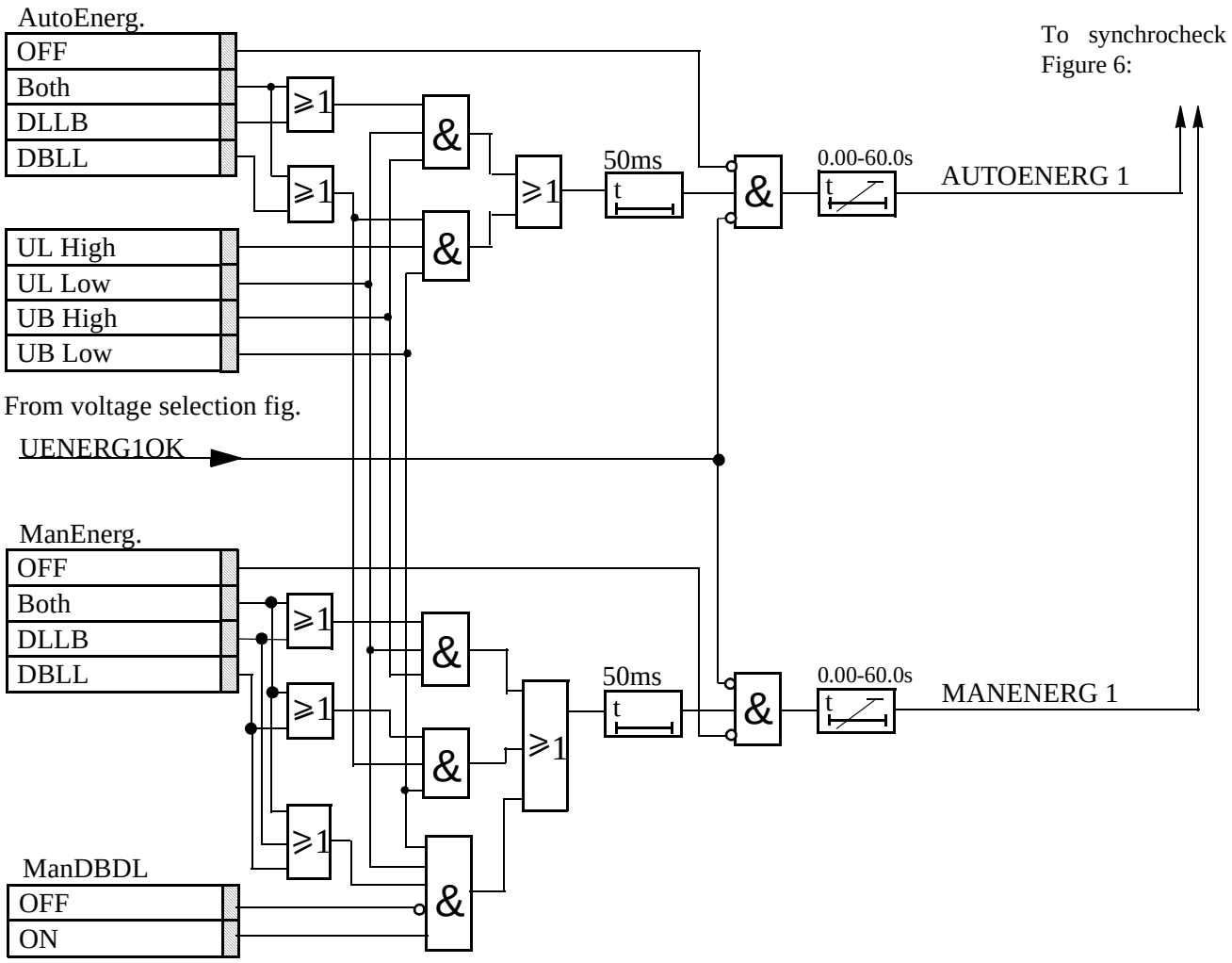

Figure 7: Simplified logic diagram - energising check.

3 Setting

The setting parameters are accessible through the HMI. The parameters for the synchrocheck function are found in the HMI tree under:

Settings
Functions
Group n
SynchroCheck
SynchroCheck n (n=1-4)

(The number of SynchroCheck settings is dependent of the version)

Comments regarding settings.

3.1 Operation

Off/Release/On

Off	The synchrocheck function is off and the output is low.
Release	There are fixed, high output signals SYN1-AUTOOK = 1 and SYN1-MANOK = 1.
On	The function is in service and the output signal depends on the input conditions.

3.2 Input phase

The measuring phase of the UL1, UL2, UL3 line voltage, which can be of a single-phase (phase-neutral) or two-phases (phase-phase). (Only available in terminals intended for one bay).

3.3 UMeasure

Selection of single-phase (phase-neutral) or two-phase (phase-phase) measurement. (Only available in terminals intended for several bays).

3.4 PhaseShift

This setting is used to compensate for a phase shift caused by a line transformer between the two measurement points for UBus and ULine. The set value is added to the measured phase difference. The bus voltage is reference voltage.

3.5 URatio

The URatio is defined as URatio=UBus/ULine. A typical use of the setting is to compensate for the voltage difference caused if one wishes to connect the UBus phase-phase and ULine phase-neutral. The “Input phase”-setting should then be set to phase-phase and the “URatio”-setting to sqr3=1.732. This setting scales up the line voltage to equal level with the bus voltage.

3.6 AutoEnerg and ManEnerg

Two different settings can be used for automatic and manual closing of the circuit breaker.

Off	The energising function is Off.
DLLB	The line voltage U-line is low, below (10-80% U1b) and the bus voltage U-bus is high, above (70-100% U1b).
DBLL	The bus voltage U-bus is low, below (10-80% U1b) and the line voltage U-line is high, above (70-100% U1b).
Both	Energising can be done in both directions, DLLB or DBLL.
tAutoEnerg	The required consecutive time of fulfillment of the energising condition to achieve SYN1-AUTOOK.
tManEnerg	The required consecutive time of fulfillment of the energising condition to achieve SYN1-MANOK.

3.7 ManDBDL

If the parameter is set to “On”, closing is enabled when Both U-Line and U-bus are below ULow and ManEnerg is set to “DLLB”, “DBLL” or “Both”.

4 Testing

At periodical checks, the functions should preferably be tested with the used settings. To test a specific function, it might be necessary to change some setting parameters, for example:

- AutoEnerg = On/Off/DLLB/DBLL/Both
- ManEnerg = Off
- Operation = Off, On

The tests explained in the section “Synchrocheck tests” on page 378 describe the settings, which can be used as references during testing, are presented before the final settings are specified. After testing, restore the equipment to the normal or desired settings.

4.1 Test equipment

A secondary injection test set with the possibility to alter the phase angle by regulation of the resistive and reactive components is needed. Here, the phase angle meter is also needed. To perform an accurate test of the frequency difference, a frequency generator at one of the input voltages is needed. The tests can also be performed with the computer-aided test system FREJA which has a specially designed program for evaluating the synchro-check function.
Figure 8: shows the general test connection principle, which can be used during testing.

This description describes the test of the version intended for one bay.

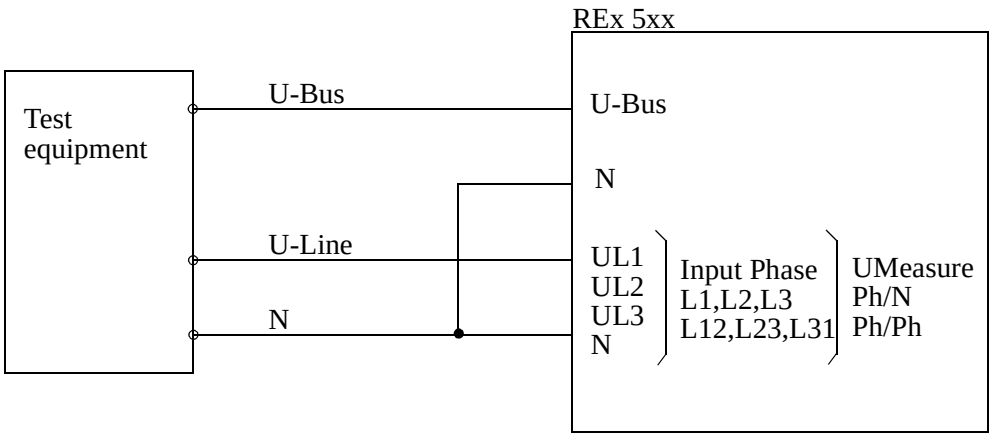

Figure 8: General test connection for synchrocheck with three-phase voltage connected to the line side.

4.2 Synchrocheck tests

4.2.1 Test of voltage difference

Set the voltage difference at 30% U1b on the HMI, and the test should check that operation is achieved when the voltage difference UDiff is lower than 30% U1b.

These voltage inputs are used:

U-line UL1, UL2 or UL3 voltage input on the terminal.

U-bus U5 voltage input on the terminal

These HMI settings can be used during the test if the final setting is not determined:

1 Set these HMI settings, which are found under:

Settings
Functions
Group n
SynchrCheck
SynchroCheck1

Table 1: Test settings for voltage difference

Parameter	Setting
Operation	On
InputPhase	UL1
USelection	SingleBus
PhaseShift	0 deg
URatio	1.00
AutoEnerg	Off
ManEnerg	Off
ManDBDL	Off
UHigh	70% U1b
ULow	40% U1b
FreqDiff	0.05 Hz
PhaseDiff	45°
UDiff	30%U1b
tAutoEnerg	0.5 s
tManEnerg	0.5 s

2 **Test with UDiff = 0%**

- Apply voltages U-line (UL1) = 80% U1b and U-Bus (U5) = 80% U1b with no frequency or phase difference.
- Check that the SYN1-AUTOOK and SYN1-MANOK outputs are activated.
- The test can be repeated with different voltage values to verify that

the function operates within UDiff <30%.

3 **Test with UDiff = 40%**
- Increase the U-bus (U5) to 120% U1b, and the U-line (UL1) = 80% U1b with no frequency or phase difference.
- Check that the two outputs are **not** activated.

4 **Test with UDiff = 20%, Uline < UHigh**
- Decrease the U-line (UL1) to 60% U1b and the U-bus (U5) to be equal to 80% U1b.
- Check that the two outputs are **not** activated.

5 **Test with URatio=0.20**
- Run the test under section 2 to 4 but with U-bus voltages 5 times lower.

6 **Test with URatio=5.00**
- Run the test under section 2 to 4 but with U-line voltages 5 times lower.

4.2.2 Test of phase difference

The phase difference is set at 45° on the HMI, and the test should verify that operation is achieved when the PhaseDiff (phase difference) is lower than 45°.

1 Set these HMI settings:

Table 2: Test settings for phase difference

Parameter	Setting
Operation	On
InputPhase	UL1
USelection	SingleBus
PhaseShift	0 deg
URatio	1.00
AutoEnerg	Off
ManEnerg	Off
ManDBDL	Off
UHigh	70% U1b
ULow	40% U1b
FreqDiff	0,05 Hz
PhaseDiff	45°
UDiff	15% U1b
tAutoEnerg	0.5 s
tManEnerg	0.5 s

2 **Test with PhaseDiff = 0°**

Apply voltages U-line (UL1) = 100% U1b and U-bus (U5) = 100% U1b, with no frequency or phase difference.
Check that the SYN1-AUTOOK and SYN1-MANOK outputs are activated.

By changing the phase angle on U1 connected to U-bus, between +/- 45° you can check that the two outputs are activated for a PhaseDiff lower than 45°. It should not operate for other values. See Figure 9:.

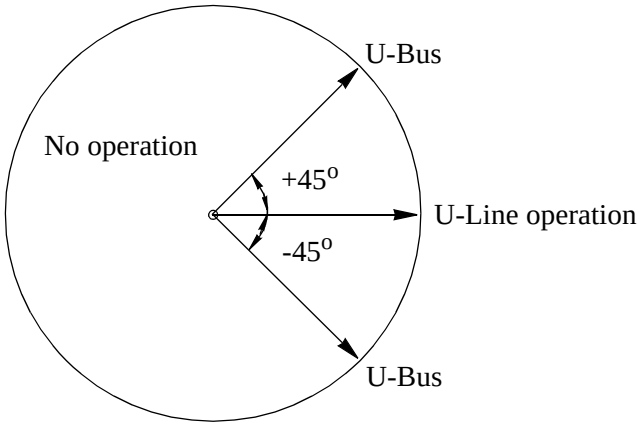

Figure 9: Test of phase difference.

4 Apply a PhaseShift setting of 10 deg. Change the phase angle between +55 and -35 and verify that the two outputs are activated for phase differences between these values but not for phase differences outside. See Figure 9:.

Change the PhaseShift setting to 350 deg. Change the phase angle between +35 and -55 and verify as above.

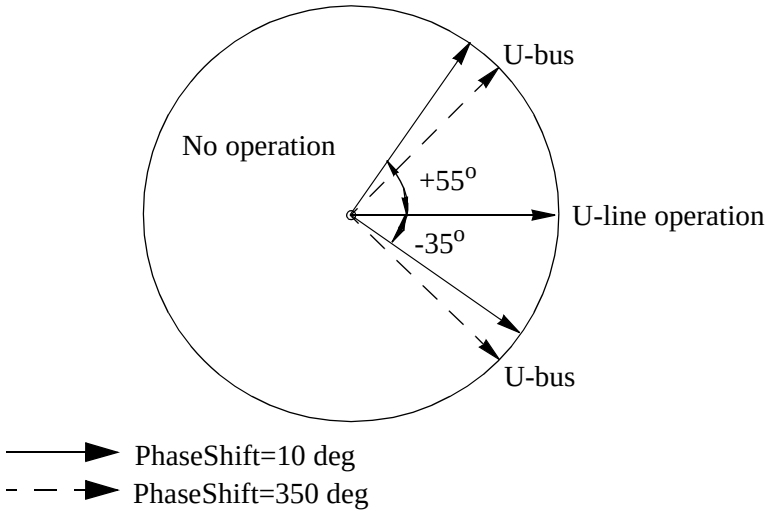

Figure 10: Test of phase difference

4.2.3 Test of frequency difference

The frequency difference is set at 50 mHz on the HMI, and the test should verify that operation is achieved when the FreqDiff frequency difference is lower than 50 mHz.

1 Use the same HMI setting as in section “Test of phase difference” on page 379.

2 **Test with FreqDiff = 0 mHz**
Apply voltages U-Line (UL1) equal to 100% U1b and U-Bus (U5) equal to 100% U1b, with a frequency difference equal to 0 mHz and a phase difference lower than 45°. Check that the SYN1-AUTOOK and SYN1-MANOK outputs are activated.

3 **Test with FreqDiff = 1Hz**
Apply voltage to the U-line (UL1) equal to 100% U1b with a frequency equal to 50 Hz and voltage U-bus (U5) equal to 100% U1b, with a frequency equal to 49 Hz.
Check that the two outputs are **NOT** activated.

4 The test can be repeated with different frequency values to verify that the function operates for values lower than the set ones. If the FREJA program, Test of synchronising relay, is used the frequency can be changed continuously.

But note that a frequency difference also implies a floating mutual-phase difference. So the SYN1-AUTOOK and SYN1-MANOK outputs might not be stable, even though the frequency difference is within set limits, because the phase difference is not stable!

4.2.4 Test of reference voltage

1 Use the same basic test connection as in Figure 8:. The UDiff between the voltage connected to U-bus and U-line should be 0%, so that the SYN1-AUTOOK and SYN1-MANOK outputs are activated first.
Change the U-Line voltage connection to UL2 without changing the setting on the HMI
Check that the two outputs are **not** activated.

2 The test can also be repeated by moving the U-line to the UL3 input.

4.3 Test of energising check

Use these voltage inputs:

U-line = UL1, UL2 or UL3 voltage input on the terminal.

U-bus = U5 voltage input on the terminal.

4.3.1 Test of dead line live bus (DLLB)

The test should verify that the energising function operates for a low voltage on the U-Line and for a high voltage on the U-bus. This corresponds to an energising of a dead line to a live bus.

Use these HMI settings during the test if the final setting is not determined.

1 Set these HMI settings:

Table 3: Test settings for DLLB

Parameter	Setting
Operation	On
InputPhase	UL1
USelection	SingleBus
PhaseShift	0 deg
URatio	1.00
AutoEnerg	DLLB
ManEnerg	DLLB
ManDBDL	Off
UHigh	80% U1b
ULow	40% U1b
FreqDiff	0,05 Hz
PhaseDiff	45°
UDiff	15% U1b
tAutoEnerg	0.5 s
tManEnerg	0.5 s

2 Apply a single-phase voltage 100% U1b to the U-bus (U5), and a single-phase voltage 30% U1b to the U-line (UL1).

3 Check that the SYN1-AUTOOK and SYN1-MANOK outputs are activated.

4 Increase the U-Line (UL1) to 60% U1b and U-Bus(U5) to be equal to 100% U1b. The outputs should **NOT** be activated.

5 The test can be repeated with different values on the U-Bus and the U-Line.

4.3.2 Dead bus live line (DBLL)

The test should verify that the energising function operates for a low voltage on the U-bus and for a high one on the U-line. This corresponds to an energising of a dead bus from a live line.

1 Change the HMI settings AutoEnerg and ManEnerg to DBLL**.**

2 Apply a single-phase voltage of 30% U1b to the U-bus (U5) and a single-phase voltage of 100% U1b to the U-line (UL1).

3 Check that the SYN1-AUTOOK and SYN1-MANOK outputs are activated.

4 Decrease the U-line to 60% U1b and keep the U-bus equal to 30% U1b.
The outputs should **NOT** be activated.

5 The test can be repeated with different values on the U-bus and the U-line.

4.3.3 Energising in both directions (DLLB or DBLL)

1 Change the HMI settings AutoEnerg and ManEnerg to Both.

2 Apply a single-phase voltage of 30% U1b to the U-line (UL1) and a single-phase voltage of 100% U1b to the U-bus (U5).

3 Check that the “SYN1-AUTOOK” and “SYN1-MANOK” outputs are activated.

4 Change the connection so that the U-line (UL1) is equal to 100% U1b and the U-bus (U5) is equal to 30% U1b.

5 The outputs should still be activated.

6 The test can be repeated with different values on the U-bus and the U-line.

7 Restore the equipment to normal or desired settings.

4.3.4 Dead bus Dead line (DBDL)

The test should verify that the energising function operates for a low voltage on both the U-bus the U-line, i.e closing of the breaker in a non energised system.

1 Set AutoEnerg to Off and ManEnerg to DBLL.

Set ManDBDL to On

2 Apply a single-phase voltage of 30% U1b to the U-bus (U5) and a single-phase voltage of 30% U1b to the U-line (UL1).

3 Check that the SYN1-MANOK output is activated.

4 Increase the U-bus to 80% U1b and keep the U-line equal to 30% U1b.

The outputs should **NOT** be activated.

5 Repeat the test with ManEnerg set to DLLB and Both, and different values on the U-bus and the U-line.

5 Appendix

5.1 Function block

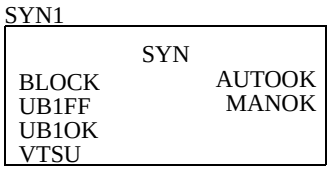

5.2 Signal list

Block	Signal	Type	Description
SYNx-	BLOCK	IN	Block of synchrocheck function x (x=1-4)
SYNx-	UB1FF	IN	External voltage fuse failure, bus 1
SYNx-	UB1OK	IN	External voltage fuse healthy, bus 1
SYNx-	VTSU	IN	Block from internal fuse failure supervision or from external fuse failure of the line voltage.
SYNx-	AUTOOK	OUT	Automatic synchro-/energising check OK
SYNx-	MANOK	OUT	Manual synchro-/energising check OK

5.3 Setting table

Parameter	Range	Unit	Default	Parameter description
Operation	Off, Release, On		Off	Synchrocheck function Off/Release/On
InputPhase	L1, L2, L3, L1-L2, L2-L3, L3-L1		L1	Select input voltage
UMeasure	Ph/N, Ph/Ph		Ph/N	Select input voltage Ph/N or Ph/Ph
PhaseShift	0-360	degrees	0	Phase shift between U-bus and U-line
URatio	0.20-5.00		1.00	Voltage ratio between U-bus and U-line
AutoEnerg	Off, DLLB, DBLL, Both		Off	Auto energising/synchronising method
ManEnerg	Off, DLLB, DBLL, Both		Off	Manual energising/synchronising method
ManDBDL	Off, On		Off	Manual deadbus and deadline energising
UHigh	50-120	%	80	High voltage limit, as a percentage of Ub
ULow	10-100	%	40	Low voltage limit, as a percentage of Ub
FreqDiff	0.05-0.30	Hz	0.20	Frequency difference limit
PhaseDiff	5-75	degrees	20	Phase difference limit
UDiff	5-50	%	20	Voltage difference limit, as a percentage of Ub
tAutoEnerg	0.000-60.000	s	0.100	Auto energising time delay period
tManEnerg	0.000-60.000	s	0.100	Manual energising time delay period

1 Application

1.1 Synchrocheck

The synchrocheck function is used for controlled closing of a circuit breaker in an interconnected network. When used, the function gives an enable signal at satisfied voltage conditions across the breaker to be closed. When there is a parallel circuit established, the frequency is normally the same at the two sides of the open breaker. At power swings, e.g. after a line fault, an oscillating difference can appear. Across the open breaker, there can be a phase angle and a voltage amplitude difference due to voltage drop across the parallel circuit or circuits.

The function can be used as a condition to be fulfilled before the breaker is closed at manual closing and/or together with the auto-recloser function.

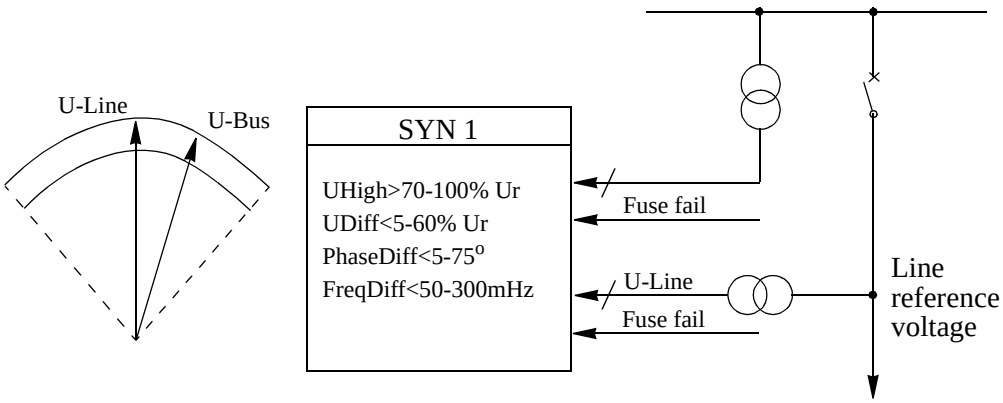

Figure 1: Synchrocheck.

1.2 Energising check

The energising check is made when a disconnected line is to be connected to an energised section of a network, see Figure 2:. The check can also be set to allow energising of the busbar or in both directions.

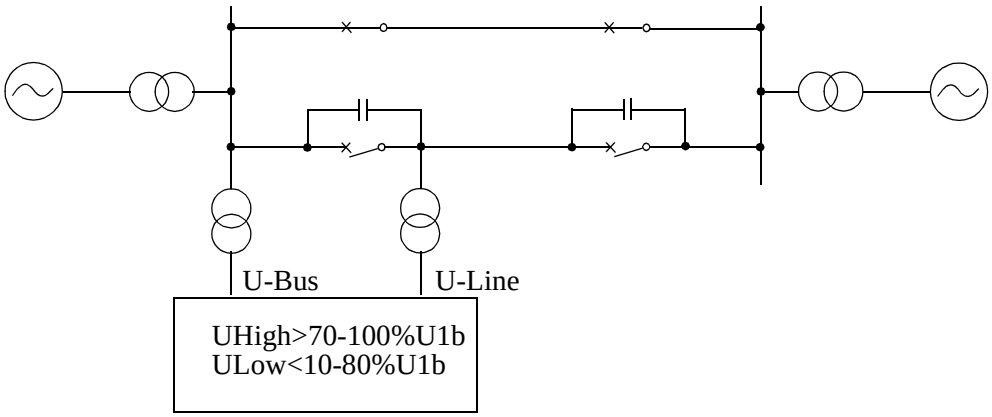

Figure 2: Principle for energising check.

A disconnected line can have a considerable potential due to, for instance, induction from a line running in parallel, or by being fed via the extinguishing capacitors in the circuit breakers. This voltage can be as high as 30% or more of the rated voltage of the line.

1.3 Voltage connection

The voltage circuits are arranged differently depending on the number of synchrocheck functions that are included in the terminal.

In terminals intended for one bay the U-line voltage reference phase is selected on the human-machine interface (HMI). The reference voltage can be single-phase L1, L2, L3 or phase-phase L1-L2, L2-L3, L3-L1. The U-bus voltage must then be connected to the same phase or phases as chosen on the HMI. Figure 3: shows the voltage connection.

In terminals intended for several bays, all voltage inputs are single-phase circuits. The voltage can be selected for single-phase or phase-to-phase measurement on the HMI. All voltage inputs must be connected to the same phase or phases.

The circuit breaker can be closed when the conditions for FreqDiff, PhaseDiff, and UDiff are fulfilled with the UHigh condition.

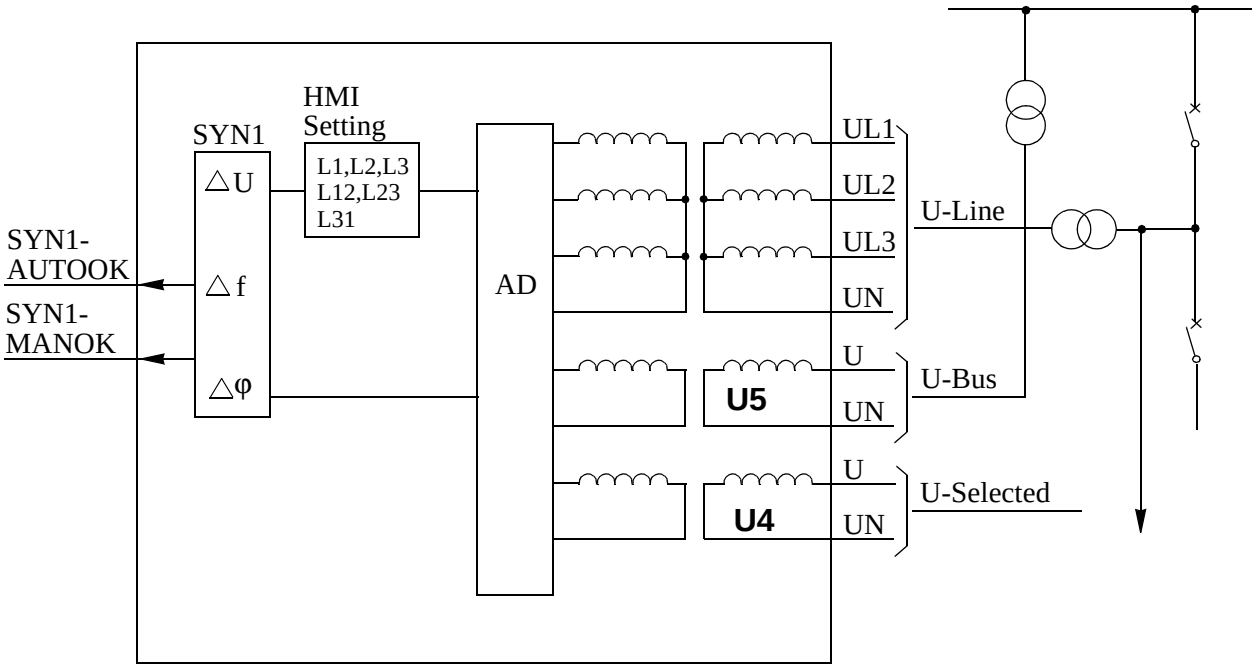

Figure 3: Connection of the synchrocheck function for one bay.

2 Theory of operation

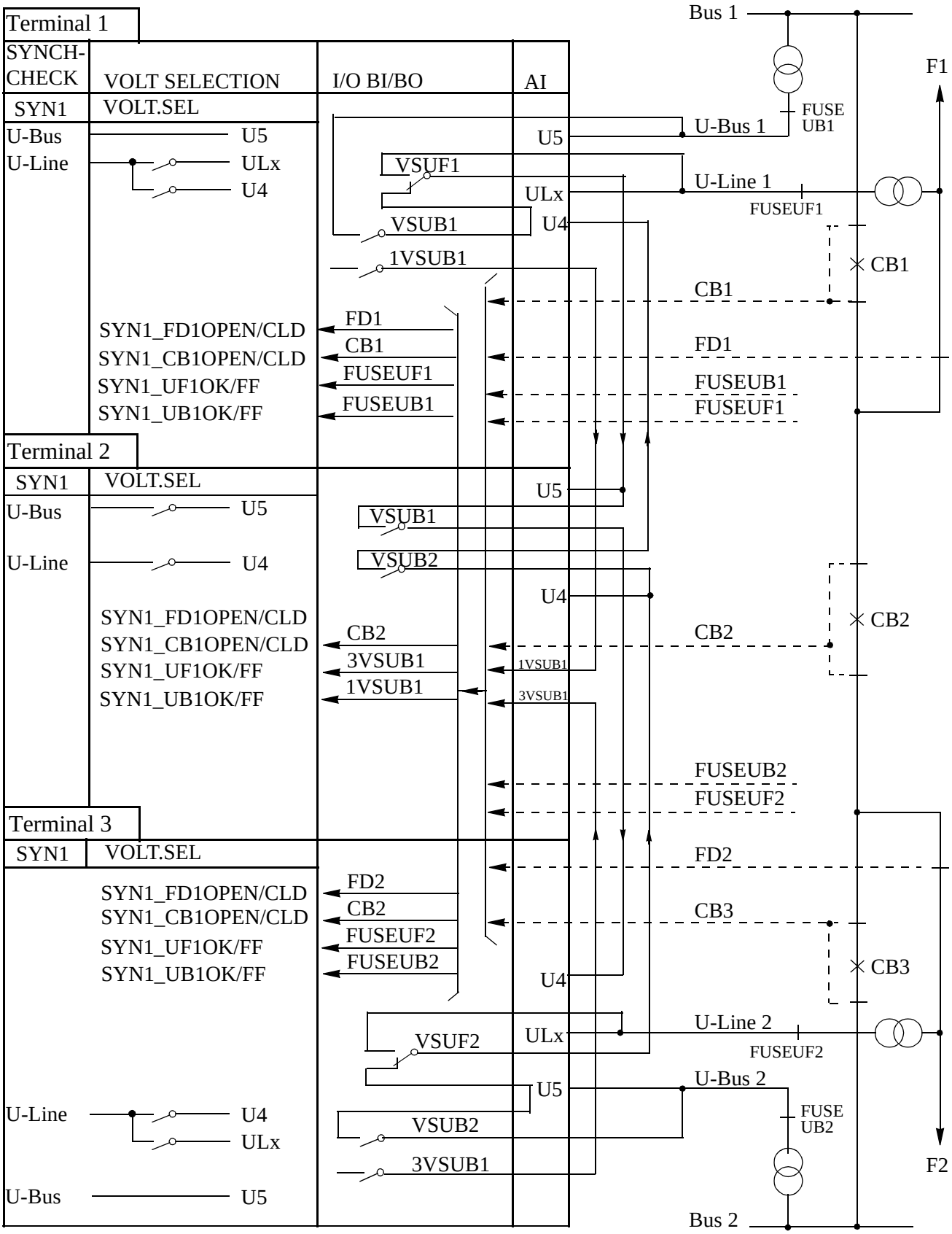

*) Explanation of signal names, see Section 2.4

Figure 4: Connections in 1 $^1/_2$ circuit breaker arrangement.

2.1 Synchrocheck

The synchrocheck function measures the difference between the U-line and the U-bus, regarding voltage (*UDiff*), phase angle (*PhaseDiff*), and frequency (*FreqDiff*). It operates and permits closing of the circuit breaker when the following conditions are simultaneously fulfilled.

- The voltages U-line and U-bus are higher than the set value for *UHigh* of the base voltage U1b.
- The differences in the voltage and phase angles are smaller than the set values of *UDiff* and *PhaseDiff*.
- The difference in frequency is less than the set value of *FreqDiff*. The bus frequency must also be within a range of ±5 Hz from the rated frequency.

2.2 Energising check

The energising operation can be set to operate in either direction over the circuit breaker, or it can be permitted to operate in both directions. Use the setting of the parameters *AutoEnerg* and *ManEnerg* to select the energising operation in:

- Both directions (Both)
- Dead line live bus (DLLB)
- Dead bus live line (DBLL)

The voltage level considered to be a non-energised bus or line is set on the HMI. An energising can occur — depending on:

- the set direction of the energising function,
- the set limit for energised condition (live - *UHigh*) and
- the set limit for non-energised (dead - *ULow*) condition.

The equipment is considered energised if the voltage is above the set value *UHigh* (e.g. 80% of the base voltage), and non-energised if it is below the set value, *ULow* (e.g. 30% of the base voltage).

The voltage check can also be set Off. A closing impulse is issued to the circuit breaker if one of the U-line or U-bus voltages is High and the other is Low, that is, when only one side is energised. Set *AutoEnerg* and *ManEnerg* to enable different conditions during automatic and manual closing of the circuit breaker.

In the manual mode it is also possible to allow closing when both sides of the breaker are dead. This is done by setting the parameter *ManDBDL* = *On* **and** *ManEnerg* to *DLLB*, *DBLL* or *Both.*

2.3 Voltage connection

The principle for the connection arrangement is shown in Figure 4:. One terminal is used for the two circuit breakers in one or two bays dependent of selected option. There is one voltage transformer at each side of the circuit breaker, and the voltage transformer circuit connections are straight forward, without any special voltage selection.
For the synchrocheck and energising check, the voltage from Bus 1

(SYN1(T1) - U-bus 1) is connected to the single-phase analogue input (U5) on terminal 1 and the voltage from Bus 2 (SYN1(T3) - U-bus 2) is connected to the single-phase analogue input (U4) on terminal 1.

Vice verse, the voltage from Bus 1 (SYN1(T1) - U-bus 1) is connected to the single-phase analogue input (U4) on terminal 3 and the voltage from Bus 2 (SYN1(T3) - U-bus 2) is connected to the single-phase analogue input (U5) on terminal 3.

For a terminal intended for one bay the line voltage transformers are connected as a three-phase voltage to the analogue inputs UL1, UL2, UL3 (ULx) (SYN1(T2) - U-Line) voltage. For the version intended for two bays the line voltages are connected as two single-phase inputs, UL1 for Bay 1 and UL2 for Bay 2.

The synchronism condition is set on the local HMI of the terminal, and the voltage is taken from Bus 1 and the Line or from Bus 2 and the Line (U-line). This means that the two synchro-check units are operating without any special voltage selection, but with the same line (U-line) voltage.

The configuration of internal signals, inputs, and outputs may be different for different busbar systems, and the actual configuration for the substation must be done during engineering of the terminals.

2.3.1 Fuse failure and Voltage OK signals

The external fuse-failure signals or signals from a tripped fuse switch/ MCBs are connected to binary inputs configured to inputs of the synchro-check functions in the terminal. There are two alternative connection possibilities. Inputs named OK must be supplied if the voltage circuit is healthy. Inputs named FF must be supplied if the voltage circuit is faulty.

The SYN1-UB1OK and SYN1-UB1FF inputs are related to the busbar voltage. Configure them to the binary inputs that indicate the status of the external fuse failure of the busbar voltage. The SYN1-VTSU input is related to the line voltage from each line.

The FUSE-VTSU signal, from the built-in optional selectable fuse-failure function, can be used as an alternative to the external fuse-failure signals.

In case of a fuse failure, the energising check (dead line - check) is blocked via the inputs (SYN1-UB1OK/FF or SYN1-VTSU).

2.4 Function block and logics

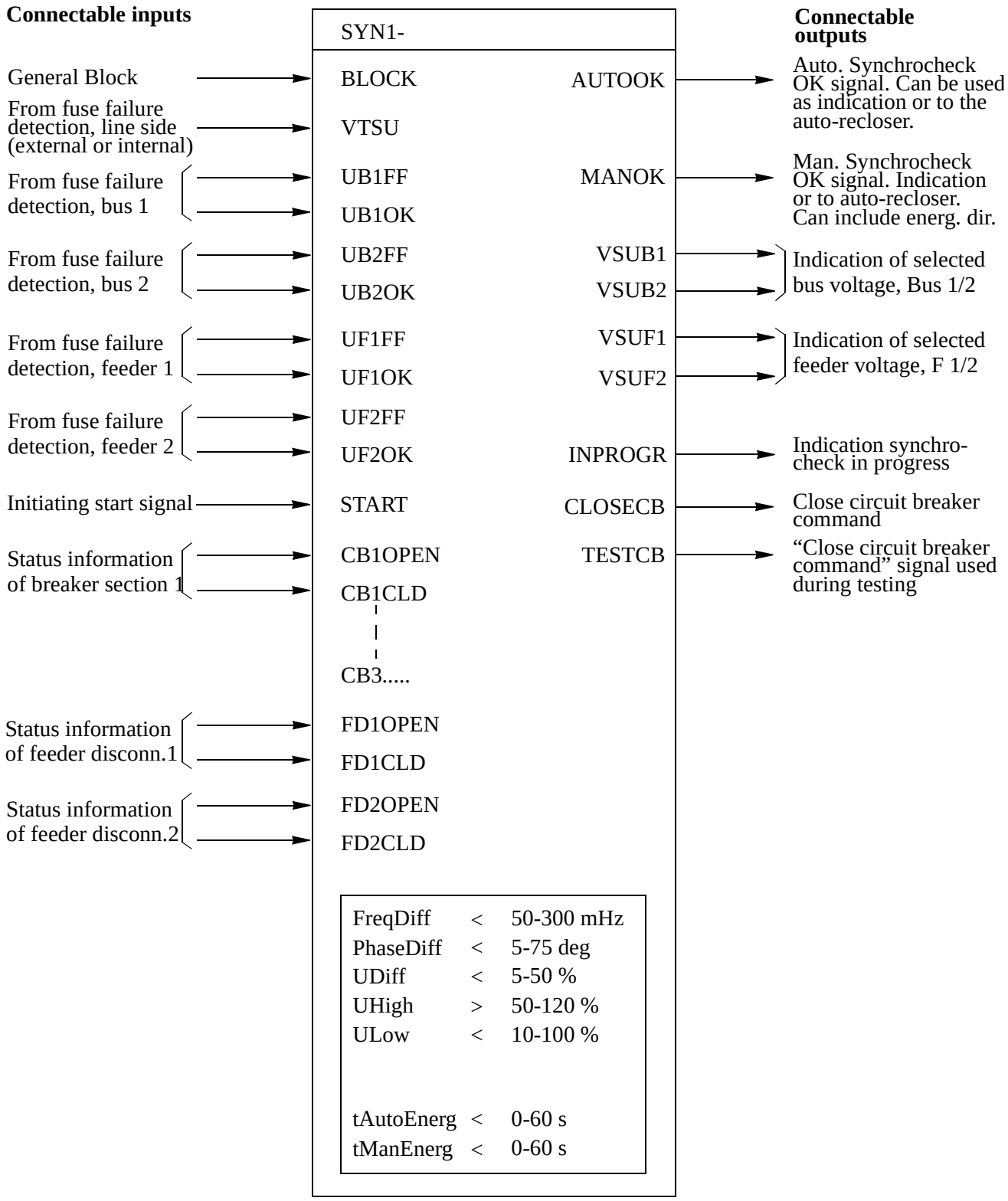

Figure 5: Input and output signals.

Figure 5: shows possible connections for the synchrocheck function and different parameters. A description of the input and output signals follows below.

Input signals	Description
SYN1-BLOCK	General block input from any external condition, that should block the synchrocheck.
SYN1-VTSU	The SYNC function cooperates with the FUSE-VTSU connected signal, which is the built-in optional fuse failure detection. It can also be connected to external condition for fuse failure. This is a blocking condition for the energising function.
SYN1-UBxFF	External fuse failure input from busbar voltage Bus 1 or 2 resp. (U5). This signal can come from a tripped fuse switch (MCB) on the secondary side of the voltage transformer. In case of a fuse failure the energising check is blocked.
SYN1-UBxOK	No external voltage fuse failure (U5). Inverted signal.
SYN1-UFxFF	External fuse failure input from feeder voltage Feeder 1 or 2 resp. (U4). This signal can come from a tripped fuse switch (MCB) on the secondary side of the voltage transformer. In case of a fuse failure the energising check is blocked.
SYN1-UFxOK	No external voltage fuse failure (U4). Inverted signal.
SYN1-START	Signal to initiate the synchrocheck function. Can be connected to a binary input, other function blocks or logics.
SYN1-CBnOPEN	Status signal of breaker section n (n=1..3), indicating *Open* breaker section.
SYN1-CBnCLD	Status signal of breaker section n, indicating *Closed* breaker section.
SYN1-FDmOPEN	Status signal of feeder disconnector m (m=1..2), indicating *Open* disconnector. Can be used for interlocking.
SYN1-FDmCLD	Status signal of feeder disconnector m, indicating *Closed* disconnector. Can be used as interlocking condition.

Output signals	Description
SYN1-AUTOOK	Synchro-/energising check OK. The output signal is high when the synchrocheck conditions set on the HMI are fulfilled. It can also include the energising condition, if selected. The signal can be used to release the autorecloser before closing attempt of the circuit breaker. It can also be used as a free signal.
SYN1-MANOK	Same as above but with alternative settings of the direction for energising to be used during manual closing of the circuit breaker.
SYN1-VSUBx	Voltage Bus 1 (and Bus 2 respectively) selected for the synchro-check function.
SYN1-VSUFx	Voltage Feeder 1 (and Feeder 2 respectively) selected for the synchro-check function.
SYN1-CLOSECB	Close breaker command from synchrocheck. Used to the circuit breaker or to be connected to the auto-reclosing function.
SYN1-TESTCB	Output when the function is in test mode. In test mode a complete synchrocheck sequence is performed except for closing of the circuit breaker. The output signal SYN1-TESTCB indicates when the SYN1-CLOSECB signal would have been submitted from the function block or when the conditions for energising are fulfilled.
SYN1-INPROGR	The signal is high when a synchrocheck is in progress, i.e from the moment a SYN1-START is received until the operation is terminated. The operation is teminated when SYN1-CLOSECB or SYN1-TESTCB has been submitted or if a SYN1-BLOCK is received.

Figure 6: is a simplified logic diagram of the internal voltage selection function. All input signals can be find above. The voltage selection function requires an extra I/O-module.

The internal resulting signal UENERG1OK is further used by the internal energising check function as a condition to release an xxxENERG 1 output. See Figure 7: for a simplified logic diagram of the energising check.

The output signals, AUTOENERG 1 and MANENERG 1, from the energising check is dependent of the actual parameter settings. These signals are further connected to the main synchro-check. See Figure 8:.

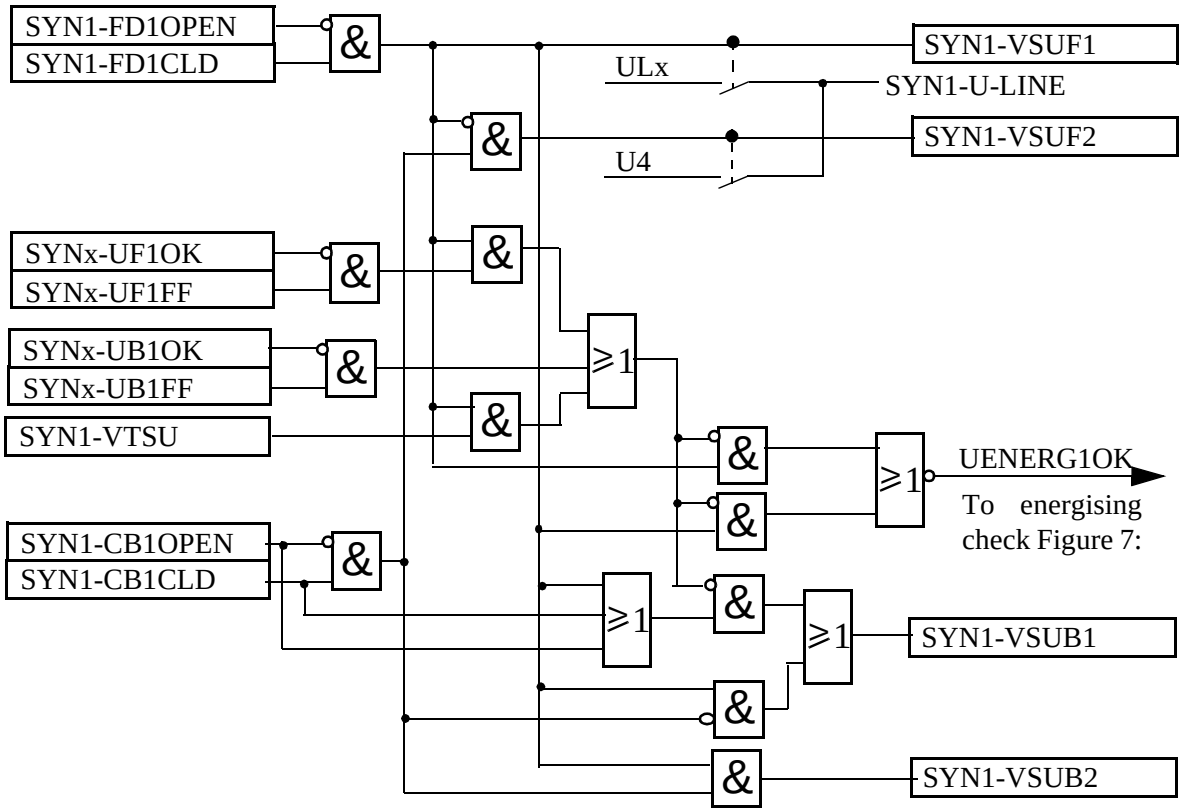

Figure 6: Simplified logic diagram - Voltage selection

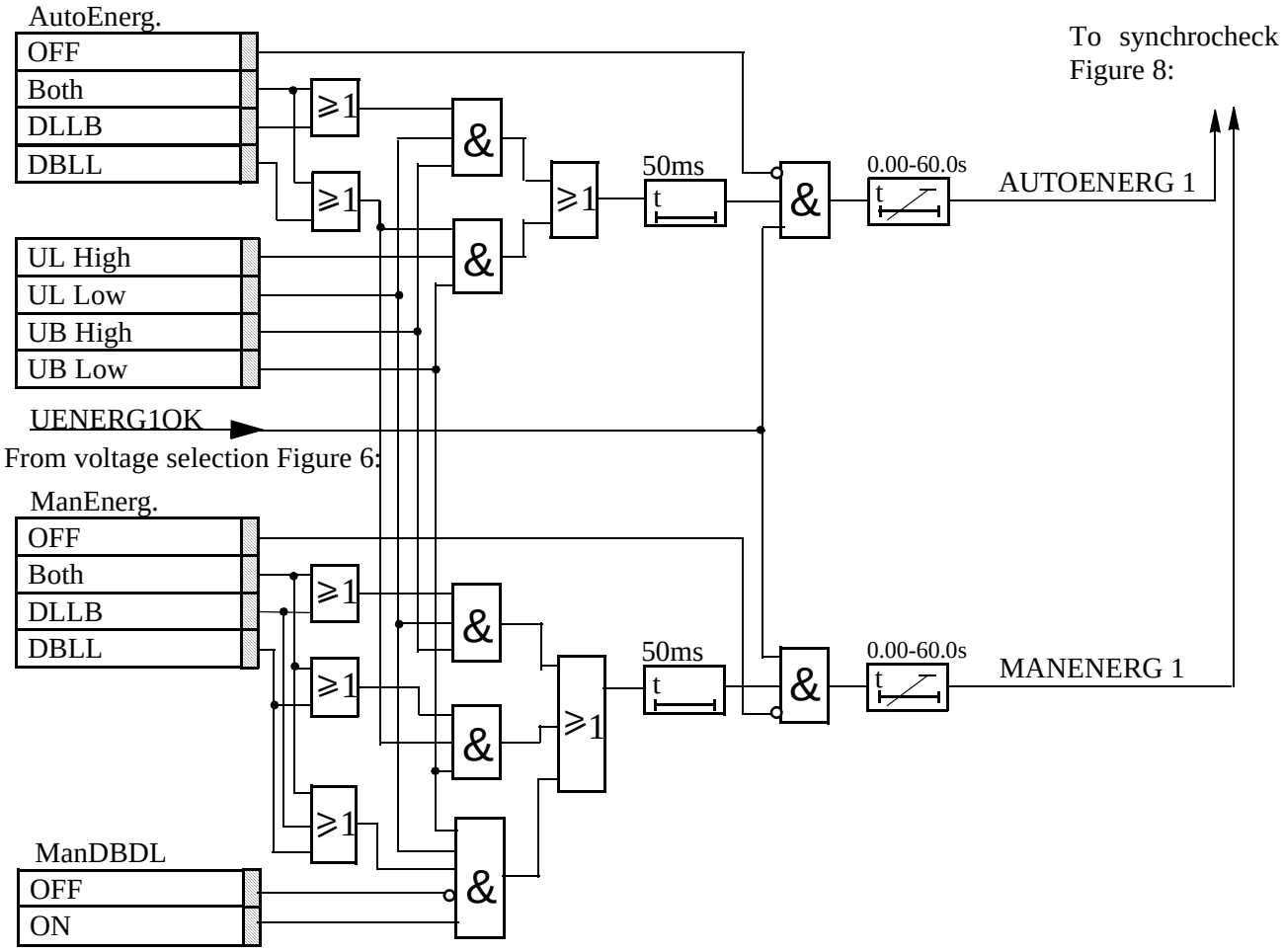

Figure 7: Simplified logic diagram - Energising check

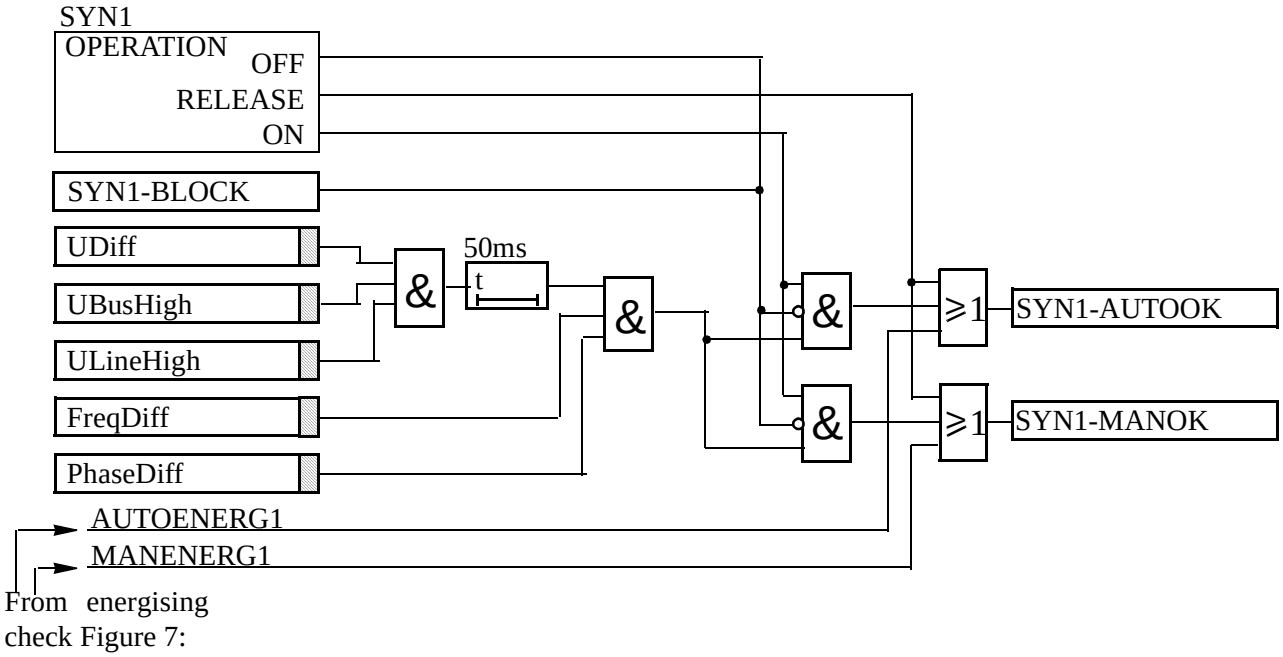

Figure 8: Simplified logic diagram - Synchrocheck

3 Setting

The setting parameters are accessible through the local HMI. The parameters for the synchrocheck function are found in the HMI tree under:

Settings
Functions
Group n (n = 1..4)
SynchroCheck
SynchroCheck1

Comments regarding settings:

3.1 Operation

Off/Release/On

Off	The synchrocheck function is off and the output is low.
Release	There are fixed, high output signals SYN1-AUTOOK = 1 and SYN1-MANOK = 1.
On	The function is in service and the output signal depends on the input conditions.

3.2 Input phase

The measuring phase of the UL1, UL2, UL3 line voltage, which can be single-phase (phase-neutral) or two-phase (phase-phase).

Note! Only available in terminals intended for one bay.

3.3 UMeasure

Selection of single-phase (phase-neutral) or two-phase (phase-phase) measurement.

Note! Only available in terminals intended for several bays.

3.4 PhaseShift

This setting is used to compensate for a phase shift caused by a line transformer between the two measurement points for UBus and ULine. The set value is added to the measured phase difference. The bus voltage is reference voltage.

3.5 URatio

The *URatio* is defined as URatio=UBus/ULine. A typical use of the setting, is to compensate for the voltage difference caused if desired to connect the UBus as phase-phase and the ULine as phase-neutral. The *Input phase* -setting should then be set to phase-phase and the *URatio*-setting to sqr(3) (=1.732). This setting scales up the line voltage to equal level with the bus voltage.

3.6 AutoEnerg and ManEnerg

Two different settings can be used for automatic and manual closing of the circuit breaker.

Off	The energising function is Off.
DLLB	The line voltage U-line is dead (low), below (10-80% U1b) and the bus voltage U-bus is live (high), above (70-100% U1b).
DBLL	The bus voltage U-bus is dead (low), below (10-80% U1b) and the line voltage U-line is live (high), above (70-100% U1b).
Both	Energising can be done in both directions, DLLB or DBLL.
tAutoEnerg	The required consecutive time of fulfillment of the energising condition to achieve SYN1-AUTOOK.
tManEnerg	The required consecutive time of fulfillment of the energising condition to achieve SYN1-MANOK.

3.7 ManDBDL

If the parameter is set to *On*, closing is enabled when Both U-Line and U-bus are below ULow and ManEnerg is set to *DLLB*, *DBLL* or *Both*.

4 Testing

At periodical checks, the functions should preferably be tested with the used settings. To test a specific function, it might be necessary to change some setting parameters, for example:

- AutoEnerg = On/Off/DLLB/DBLL/Both
- ManEnerg = Off
- Operation = Off, On

The tests explained under “Synchrocheck tests” on page 397 describe the settings, which can be used as references during testing. They are presented before the final settings are specified. After testing, restore the equipment to the normal or desired settings.

4.1 Test equipment

A secondary injection test set with the possibility to alter the phase angle by regulation of the resistive and reactive components is needed. Here, the phase angle meter is also needed. To perform an accurate test of the frequency difference, a frequency generator at one of the input voltages is needed. The tests can also be performed with the computer-aided test system FREJA, which has a specially designed program for evaluating the synchro-check function.
Figure 9: shows the general test connection principle, which can be used during testing.

This description describes the test of the version intended for one bay.

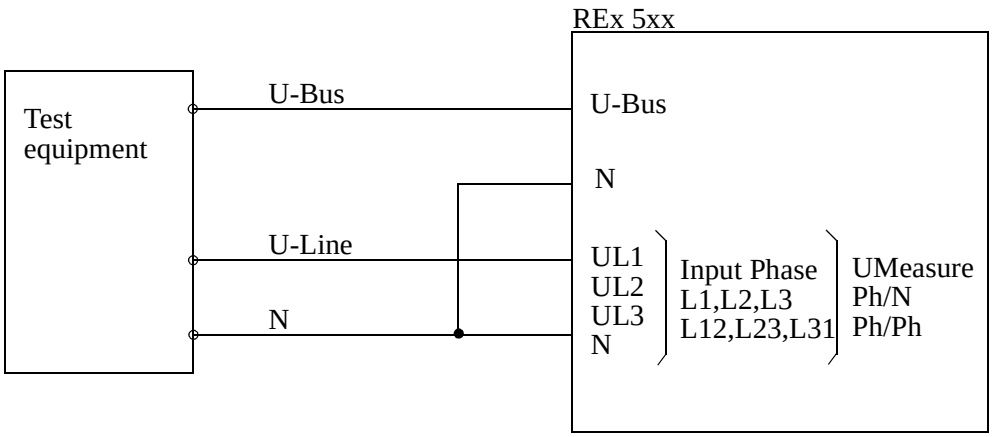

Figure 9: General test connection for synchrocheck with three-phase voltage connected to the line side.

4.2 Synchrocheck tests

4.2.1 Test of voltage difference

Set the voltage difference at 30% of U1b on the local HMI, and the test should check that operation is achieved when the voltage difference *UDiff* is lower than 30% of U1b.

These voltage inputs are used:

U-line UL1, UL2 or UL3 voltage input on the terminal.

U-bus U5 voltage input on the terminal

These settings can be used during the test if the final setting is not determined:

1 Set these parameters, which are found in the local HMI under:

Settings
Functions
Group n (n = 1..4)
SynchroCheck
SynchroCheck1

Table 1: Test settings for voltage difference

Parameter	Setting
Operation	On
InputPhase	UL1
USelection	SingleBus
PhaseShift	0 deg
URatio	1.00
AutoEnerg	Off
ManEnerg	Off
ManDBDL	Off
UHigh	70% U1b
ULow	40% U1b
FreqDiff	0.05 Hz
PhaseDiff	45 deg
UDiff	30% U1b
tAutoEnerg	0.5 s
tManEnerg	0.5 s

2 **Test with UDiff = 0%**

- Apply voltages U-line (UL1) = 80% of U1b and U-Bus (U5) = 80% of U1b with no frequency or phase difference.
- Check that the SYN1-AUTOOK and SYN1-MANOK outputs are activated.
- The test can be repeated with different voltage values to verify that the function operates within *UDiff* <30%.

3 **Test with UDiff = 40%**

- Increase the U-bus (U5) to 120% of U1b, and the U-line (UL1) = 80% of U1b with no frequency nor phase difference.
- Check that the two outputs are **NOT** activated.

4 **Test with UDiff = 20%, Uline < UHigh**
- Decrease the U-line (UL1) to 60% of U1b and the U-bus (U5) to be equal to 80% of U1b.
- Check that the two outputs are **NOT** activated.

5 **Test with URatio=0.20**
- Run the test under section 2 to 4 but with the U-bus voltages one fifth of before.

6 **Test with URatio=5.00**
- Run the test under section 2 to 4 but with the U-line voltages one fifth of before.

4.2.2 Test of phase difference

The phase difference is set at 45° on the local HMI, and the test should verify that operation is achieved when the *PhaseDiff* (phase difference) is lower than 45°.

1 Set these parameters accordingly:

Table 2: Test settings for phase difference

Parameter	Setting
Operation	On
InputPhase	UL1
USelection	SingleBus
PhaseShift	0 deg
URatio	1.00
AutoEnerg	Off
ManEnerg	Off
ManDBDL	Off
UHigh	70% U1b
ULow	40% U1b
FreqDiff	0.05 Hz
PhaseDiff	45 deg
UDiff	15% U1b
tAutoEnerg	0.5 s
tManEnerg	0.5 s

2 **Test with PhaseDiff = 0°**

Apply voltages U-line (UL1) = 100% of U1b and U-bus (U5) = 100% of U1b, with no frequency or phase difference.
Check that the SYN1-AUTOOK and SYN1-MANOK outputs are activated.

By changing the phase angle on U1 connected to U-bus, between +/- 45° enables to check that the two outputs are activated for a *PhaseDiff* lower than 45°. It should not operate for other values. See Figure 10:.

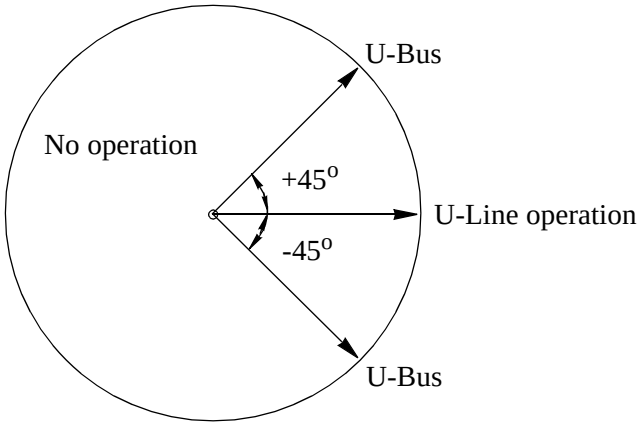

Figure 10: Test of phase difference.

4 Apply a *PhaseShift* setting of 10 deg. Change the phase angle between +55° and -35° and verify that the two outputs are activated for phase differences between these values but not for phase differences outside. See Figure 11:.

Change the *PhaseShift* setting to 350 deg. Change the phase angle between +35° and -55° and verify as above.

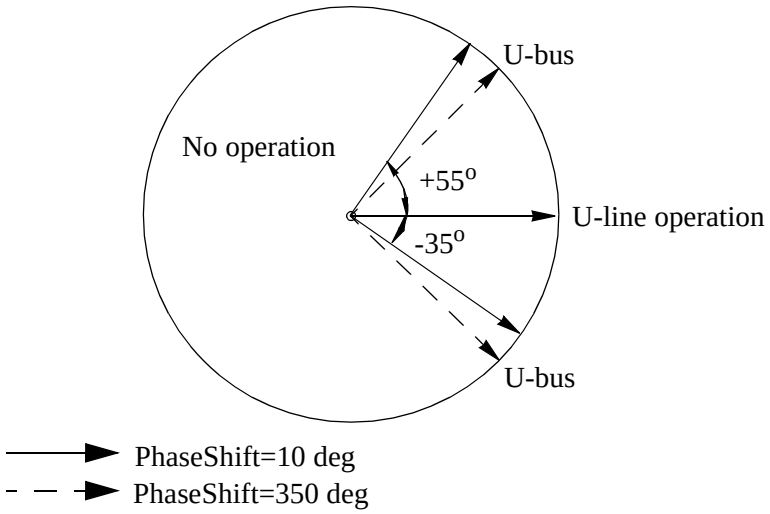

Figure 11: Test of shifted phase difference.

4.2.3 Test of frequency difference

The frequency difference is set at 50 mHz on the local HMI, and the test should verify that operation is achieved when the *FreqDiff* frequency difference is lower than 50 mHz.

1 Use the same settings as under “Test of phase difference” above.

2 **Test with FreqDiff = 0 mHz**
Apply voltages U-Line (UL1) equal to 100% of U1b and U-Bus (U5) equal to 100% of U1b, with a frequency difference equal to 0 mHz and a phase difference lower than 45°. Check that the SYN1-AUTOOK and SYN1-MANOK outputs are activated.

3 **Test with FreqDiff = 1Hz**
Apply voltage to the U-line (UL1) equal to 100% of U1b with a frequency equal to 50 Hz and voltage U-bus (U5) equal to 100% of U1b, with a frequency equal to 49 Hz.
Check that the two outputs are **NOT** activated.

4 The test can be repeated with different frequency values to verify that the function operates for values lower than the set ones. If the FREJA program, *Test of synchronising relay*, is used the frequency can be changed continuously.

Note!! A frequency difference also implies a floating mutual-phase difference. So the SYN1-AUTOOK and SYN1-MANOK outputs might NOT be stable, even though the frequency difference is within set limits, because the phase difference is not stable!

4.2.4 Test of reference voltage

1 Use the same basic test connection as in Figure 9:. The *UDiff* between the voltage connected to U-bus and U-line should be 0%, so that the SYN1-AUTOOK and SYN1-MANOK outputs are activated first.
Change the U-Line voltage connection to UL2 without changing the setting on the HMI
Check that the two outputs are **NOT** activated.

2 The test can also be repeated by moving the U-line to the UL3 input.

4.3 Test of energising check

Use these voltage inputs:

U-line = UL1, UL2 or UL3 voltage input on the terminal.

U-bus = U5 voltage input on the terminal.

4.3.1 Dead-line-live-bus (DLLB)

The test should verify that the energising function operates for a low voltage on the U-Line and for a high voltage on the U-bus. This corresponds to an energising of a dead line to a live bus.

Use these settings during the test if the final setting is not determined.

1 Set these parameters accordingly:

Table 3: Test settings for DLLB

Parameter	Setting
Operation	On
InputPhase	UL1
USelection	SingleBus
PhaseShift	0 deg
URatio	1.00
AutoEnerg	DLLB
ManEnerg	DLLB
ManDBDL	Off
UHigh	80% U1b
ULow	40% U1b
FreqDiff	0.05 Hz
PhaseDiff	45 deg
UDiff	15% U1b
tAutoEnerg	0.5 s
tManEnerg	0.5 s

2 Apply a single-phase voltage 100% of U1b to the U-bus (U5), and a single-phase voltage 30% of U1b to the U-line (UL1).

3 Check that the SYN1-AUTOOK and SYN1-MANOK outputs are activated.

4 Increase the U-Line (UL1) to 60% of U1b and U-Bus(U5) to be equal to 100% of U1b. The outputs should **NOT** be activated.

5 The test can be repeated with different values on the U-Bus and the U-Line.

4.3.2 Dead-bus-live-line (DBLL)

The test should verify that the energising function operates for a low voltage on the U-bus and for high voltage on the U-line. This corresponds to an energising of a dead bus from a live line.

1 Change the settings of *AutoEnerg* and *ManEnerg* to *DBLL***.**

2 Apply a single-phase voltage of 30% of U1b to the U-bus (U5) and a single-phase voltage of 100% of U1b to the U-line (UL1).

3 Check that the SYN1-AUTOOK and SYN1-MANOK outputs are activated.

4 Decrease the U-line to 60% of U1b and keep the U-bus equal to of 30% U1b.
The outputs should **NOT** be activated.

5 The test can be repeated with different values on the U-bus and the U-line.

4.3.3 Energising in both directions (DLLB or DBLL)

1 Change the settings of *AutoEnerg* and *ManEnerg* to *Both*.

2 Apply a single-phase voltage of 30% of U1b to the U-line (UL1) and a single-phase voltage of 100% of U1b to the U-bus (U5).

3 Check that the SYN1-AUTOOK and SYN1-MANOK outputs are activated.

4 Change the connection so that the U-line (UL1) is equal to 100% of U1b and the U-bus (U5) is equal to 30% of U1b.

5 The outputs should still be activated.

6 The test can be repeated with different values on the U-bus and the U-line.

7 Restore the equipment to normal or desired settings.

4.3.4 Dead-bus-dead-line (DBDL)

The test should verify that the energising function operates for a low voltage on both the U-bus the U-line, i.e closing of the breaker in a non-energised system.

1 Set *AutoEnerg* to *Off* and *ManEnerg* to *DBLL*.

Set *ManDBDL* to *On*.

2 Apply a single-phase voltage of 30% of U1b to the U-bus (U5) and a single-phase voltage of 30% of U1b to the U-line (UL1).

3 Check that the SYN1-MANOK output is activated.

4 Increase the U-bus to 80% of U1b and keep the U-line equal to 30% of U1b.

The outputs should **NOT** be activated.

5 The test can be repeated with the *ManEnerg* set to *DLLB* and *Both*, and using different values on the U-bus and the U-line.

5 Appendix

5.1 Function block

SYN1

SYN1-	
BLOCK	AUTOOK
	MANOK
VTSU	
UB1FF	VSUB1
UB1OK	VSUB2
UB2FF	VSUF1
UB2OK	VSUF2
UF1FF	
UF1OK	INPROGR
UF2FF	CLOSECB
UF2OK	TESTCB
START	
CB1OPEN	
CB1CLD	
CB2OPEN	
CB2CLD	
CB3OPEN	
CB3CLD	
FD1OPEN	
FD1CLD	
FD2OPEN	
FD2CLD	

5.2 Signal list

Block	Signal	Type	Description
SYN1-	BLOCK	IN	Block of synchro-check function 1
SYN1-	CB1CLD	IN	Breaker section 1 closed
SYN1-	CB1OPEN	IN	Breaker section 1 open
SYN1-	CB2CLD	IN	Breaker section 2 closed
SYN1-	CB2OPEN	IN	Breaker section 2 open
SYN1-	CB3CLD	IN	Breaker section 3 closed
SYN1-	CB3OPEN	IN	Breaker section 3 open
SYN1-	FD1CLD	IN	Feeder disconnector 1 closed
SYN1-	FD1OPEN	IN	Feeder disconnector 1 open
SYN1-	FD2CLD	IN	Feeder disconnector 2 closed
SYN1-	FD2OPEN	IN	Feeder disconnector 2 open
SYN1-	START	IN	Initiate phasing operation
SYN1-	UB1FF	IN	External voltage fuse failure, bus 1
SYN1-	UB1OK	IN	External voltage fuse healthy, bus 1
SYN1-	UB2FF	IN	External voltage fuse failure, bus 2
SYN1-	UB2OK	IN	External voltage fuse healthy, bus 2
SYN1-	UF1FF	IN	External voltage fuse failure, feeder 1
SYN1-	UF1OK	IN	External voltage fuse healthy, feeder 1
SYN1-	UF2FF	IN	External voltage fuse failure, feeder 2
SYN1-	UF2OK	IN	External voltage fuse healthy, feeder 2
SYN1-	VTSU	IN	Block from internal fuse failure supervision or from external fuse failure of the line voltage.
SYN1-	AUTOOK	OUT	Automatic synchronism/Energising check OK
SYN1-	CLOSECB	OUT	Close circuit breaker pulse
SYN1-	INPROGR	OUT	Phasing operation in progress
SYN1-	MANOK	OUT	Manual synchronism/energising check OK
SYN1-	TESTCB	OUT	Close circuit breaker test output
SYN1-	VSUB1	OUT	Voltage selection from bus 1
SYN1-	VSUB2	OUT	Voltage selection from bus 2
SYN1-	VSUF1	OUT	Voltage selection from feeder 1
SYN1-	VSUF2	OUT	Voltage selection from feeder 2

5.3 Setting table

Parameter	Range	Unit	Default	Parameter description
Operation	Off, Release, On		Off	Synchro-check function Off/Release/On
InputPhase	L1, L2, L3, L1-L2, L2-L3, L3-L1		L1	Select input voltage
UMeasure	Ph/N, Ph/Ph		Ph/N	Select input voltage Ph/N or Ph/Ph
PhaseShift	0-360	degrees	0	Phase shift between U-bus and U-line
URatio	0.20-5.00		1.00	Voltage ratio between U-bus and U-line
USelection	SingleBus, DbleBus		Single-Bus	Bus arrangement for voltage selection
AutoEnerg	Off, DLLB, DBLL, Both		Off	Auto energising/synchronising method
ManEnerg	Off, DLLB, DBLL, Both		Off	Manual energising/synchronising method
ManDBDL	Off, On		Off	Manual dead-bus and dead-line energising
UHigh	50-120	%	80	High voltage limit, as a percentage of Ub
ULow	10-100	%	40	Low voltage limit, as a percentage of Ub
FreqDiff	0.05-0.30	Hz	0.20	Frequency difference limit
PhaseDiff	5-75	degrees	20	Phase difference limit
UDiff	5-50	%	20	Voltage difference limit, as a percentage of Ub
tAutoEnerg	0.000-60.000	s	0.100	Auto energising time delay period
tManEnerg	0.000-60.000	s	0.100	Manual energising time delay period
Operation-Synch	Off, On		Off	Phasing function Off/On
ShortPulse	Off, On		Off	Short pulse Off/On
FreqDiff-Synch	0.05-0.50	Hz	00.30	Frequency diff limit for phasing
tPulse	0.000-60.000	s	0.200	Breaker closing pulse duration
tBreaker	0.02-0.50	s	0.20	Closing time of the breaker

1 Application

1.1 Phasing

The phasing function is used to close a circuit breaker when two asynchronous systems are going to be connected. The breaker close command is issued at the optimum time when conditions across the breaker are satisfied in order to avoid stress on the network and its components.

The systems are defined to be asynchronous when the frequency difference between bus and line is larger than an adjustable parameter. If the frequency difference is less than this threshold value the system is defined to have a parallel circuit and the synchro-check function is used.

The phasing function measures the difference between the U-line and the U-bus. It operates and issues a closing command to the circuit breaker when the calculated closing angle is equal to the measured phase angle and these conditions are simultaneously fulfilled.

- The voltages U-line and U-bus are higher than the set value for UHigh of the base voltage U1b.
- The difference in the voltage is smaller than the set value of UDiff.
- The difference in frequency is less than the set value of FreqDiff-Synch and larger than the set value of FreqDiff. If the frequency is less than FreqDiff the synchro-check is used. The bus and line frequencies must also be within a range of ±5 Hz from the rated frequency.
- The frequency rate of change is less than 0.21 Hz/s for both U-bus and U-line.
- The closing angle is less than approx. 60 degrees.

The phasing function compensates for measured slip frequency as well as the circuit breaker closing delay. The phase advance is calculated continuously by the following formula:

$$\textit{Closing angle} = 360° \cdot \textit{Meas. freq. diff.} \cdot \textit{tBreaker} \qquad \text{(Equation 1)}$$

Closing angle is the change in angle during breaker closing delay.

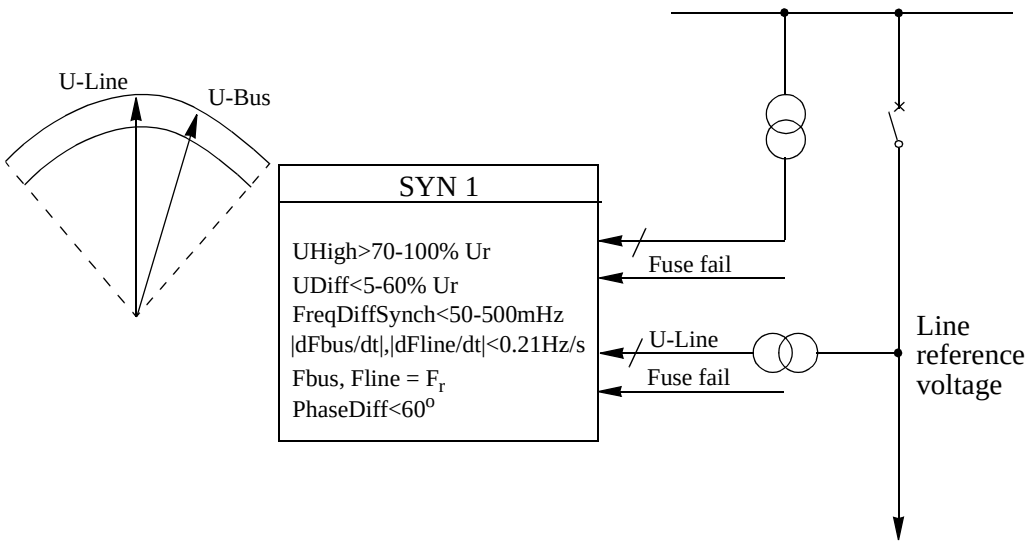

Figure 1: Phasing.

1.2 Synchrocheck

The synchrocheck function is used for controlled closing of a circuit in an interconnected network. When used, the function gives an enable signal at satisfied voltage conditions across the breaker to be closed. When there is a parallel circuit established, the frequency is normally the same at the two sides of the open breaker. At power swings, e.g. after a line fault, an oscillating difference can appear. Across the open breaker, there can be a phase angle and a voltage amplitude difference due to voltage drop across the parallel circuit or circuits. The synchrocheck function measures the difference between the U-line and the U-bus, regarding voltage (UDiff), phase angle (PhaseDiff), and frequency (FreqDiff). It operates and permits closing of the circuit breaker when these conditions are simultaneously fulfilled.

- The voltages U-line and U-bus are higher than the set value for UHigh of the base voltage U1b.
- The differences in the voltage and phase angles are smaller than the set values of UDiff and PhaseDiff.
- The difference in frequency is less than the set value of FreqDiff. The bus frequency must also be within a range of ±5 Hz from the rated frequency.

The function can be used as a condition to be fulfilled before the breaker is closed at manual closing and/or together with the auto-recloser function.

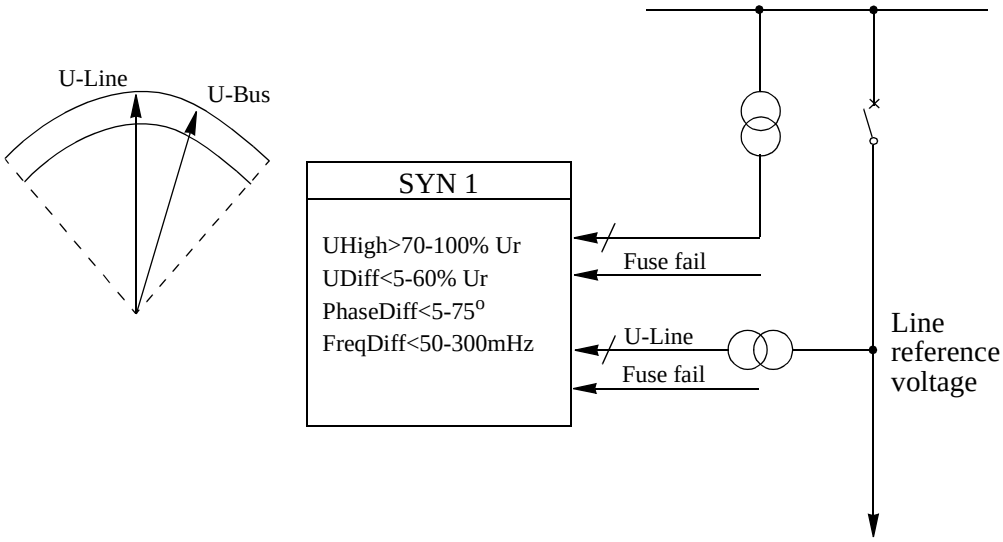

Figure 2: Synchrocheck.

The reference voltage can be single-phase L1, L2, L3 or phase-phase L1-L2, L2-L3, L3-L1. The U-bus voltage must then be connected to the same phase or phases as are chosen on the HMI. Figure 3: shows the voltage connection.

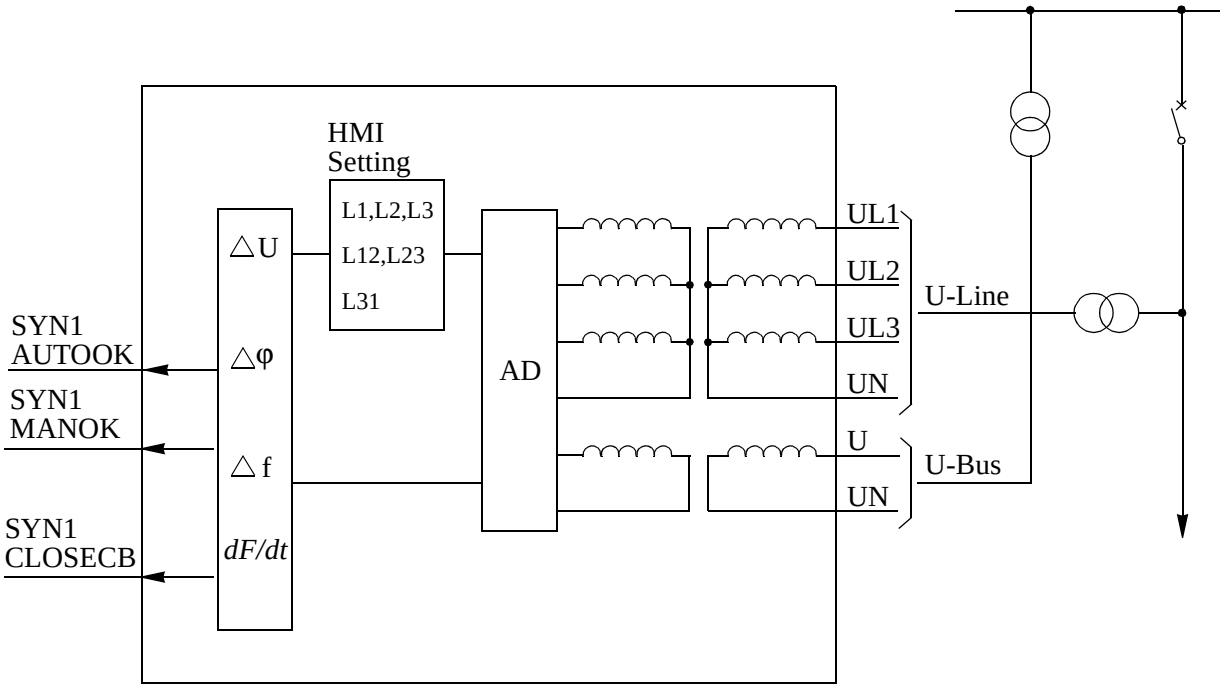

Figure 3: Connection of the phasing and synchrocheck function for one bay.

1.3 Energising check

The energising check is made when a disconnected line is to be connected to an energised section of a network, see Figure 4:. The check can also be set to allow energisation of the busbar or in both directions.

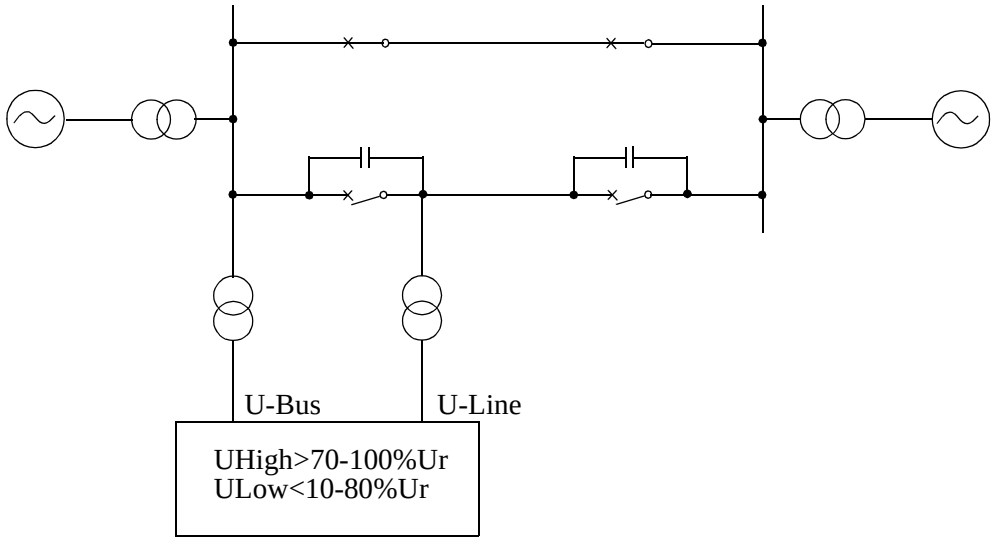

Figure 4: Principle for energising check.

The voltage level considered to be a non-energised bus or line is set on the HMI. An energising can occur — depending on the set direction of the energising function. There are separate setable limits for energised (live) condition, UHigh, and non-energised (dead) ULow conditions. The equipment is considered energised if the voltage is above the set value UHigh (e.g. 80% of base voltage), and non-energised if it is below the set value, ULow (e.g. 30% of the base voltage). The user can set the UHigh condition between 70-100% U1b and the ULow condition between 10-80% U1b.

A disconnected line can have a considerable potential due to, for instance, induction from a line running in parallel, or by being fed via the extinguishing capacitors in the circuit breakers. This voltage can be as high as 30% or more of the rated voltage of the line.

The energising operation can be set to operate in either direction over the circuit breaker, or it can be permitted to operate in both directions. Use the AutoEnerg and ManEnerg HMI setting to select the energising operation in:

- Both directions (Both)
- Dead line live bus (DLLB)
- Dead bus live line (DBLL)

The voltage check can also be set Off. A closing impulse is issued to the circuit breaker if one of the U-line or U-bus voltages is High and the other is Low, that is, when only one side is energised. The user can set AutoEnerg and ManEnerg to enable different conditions during automatic and manual closing of the circuit breaker.

In the manual mode it is also possible to allow closing when both sides of the breaker are dead. This is done by setting the parameter ManDBDL = “On” and ManEnerg to “DLLB”, “DBLL” or “Both”.

1.4 Voltage selection

The voltage selection function is used for the phasing and synchronism (SYN1) and energising check functions. When the terminal is used in a double bus, the voltage that should be selected depends on the positions of the breakers and/or disconnectors. By checking the position of the disconnectors and/or breakers auxiliary contacts, the terminal can select the right voltage for the synchronism and energising function. Select the type of voltage selection from the Synchro-check, Uselection, SingleBus or Dble-Bus on the HMI.

The configuration of internal signal inputs and outputs may be different for different busbar systems, and the actual configuration for the substation must be done during engineering of the terminal.

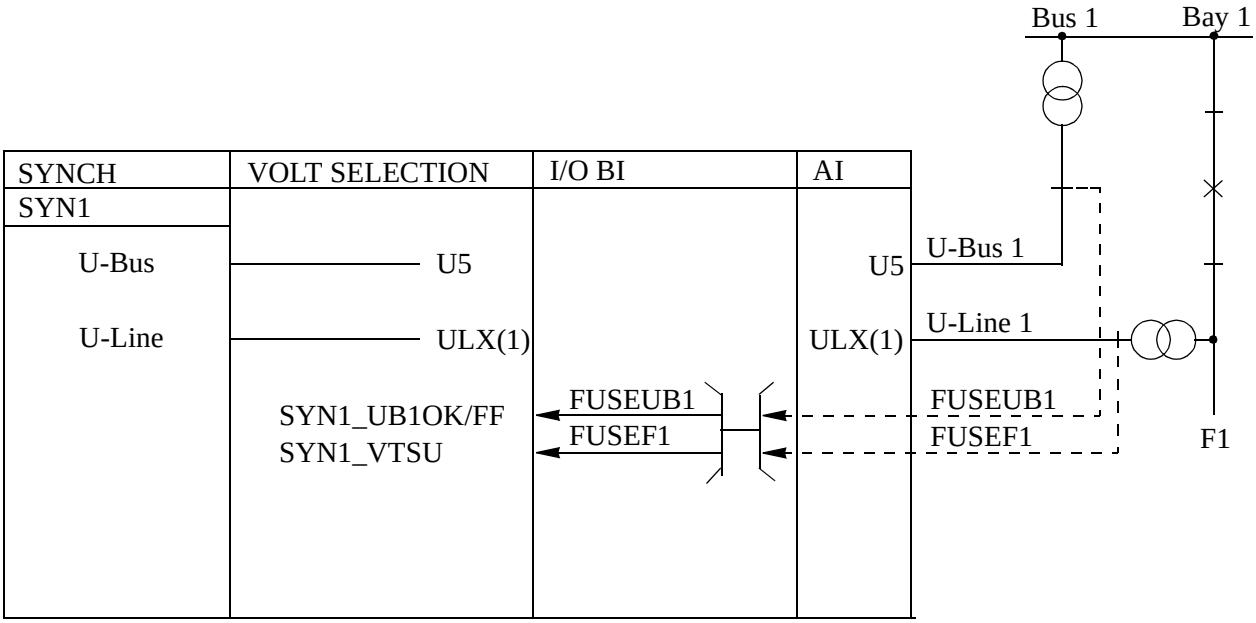

Figure 5: Voltage connection in a single busbar arrangement.

1.4.1 Voltage selection for a single busbar

Single bus is selected on the HMI. Figure 5: shows the principle for the connection arrangement. For the phasing, synchrocheck (SYN1) and energising check function, there is one voltage transformer at each side of the circuit breaker. The voltage transformer circuit connections are straight forward, no special voltage selection is needed.

For the phasing, synchrocheck and energising check, the voltage from Bus 1 (SYN1-U-Bus) is connected to the single phase analogue input (U5) on the terminal unit.

Fuse failure and Voltage OK signals

The external fuse-failure signals or signals from a tripped fuse switch/ MCB are connected to binary inputs configured to inputs of the synchro-check functions in the terminal. There are two alternative connection possibilities. Inputs named OK must be supplied if the voltage circuit is healthy. Inputs named FF must be supplied if the voltage circuit is faulty.

The SYN1-UB1OK and SYN1-UB1FF inputs are related to the busbar voltage. Configure them to the binary inputs that indicate the status of the external fuse failure of the busbar voltage. The SYN1-VTSU input is related to the line voltage from each line.

The user can use the FUSE-VTSU signal from the built-in optional selectable fuse-failure function as an alternative to the external fuse-failure signals.

In case of a fuse failure, the energising check (dead line check) is blocked via the inputs (SYN1-UB1OK/FF or SYN1-VTSU).

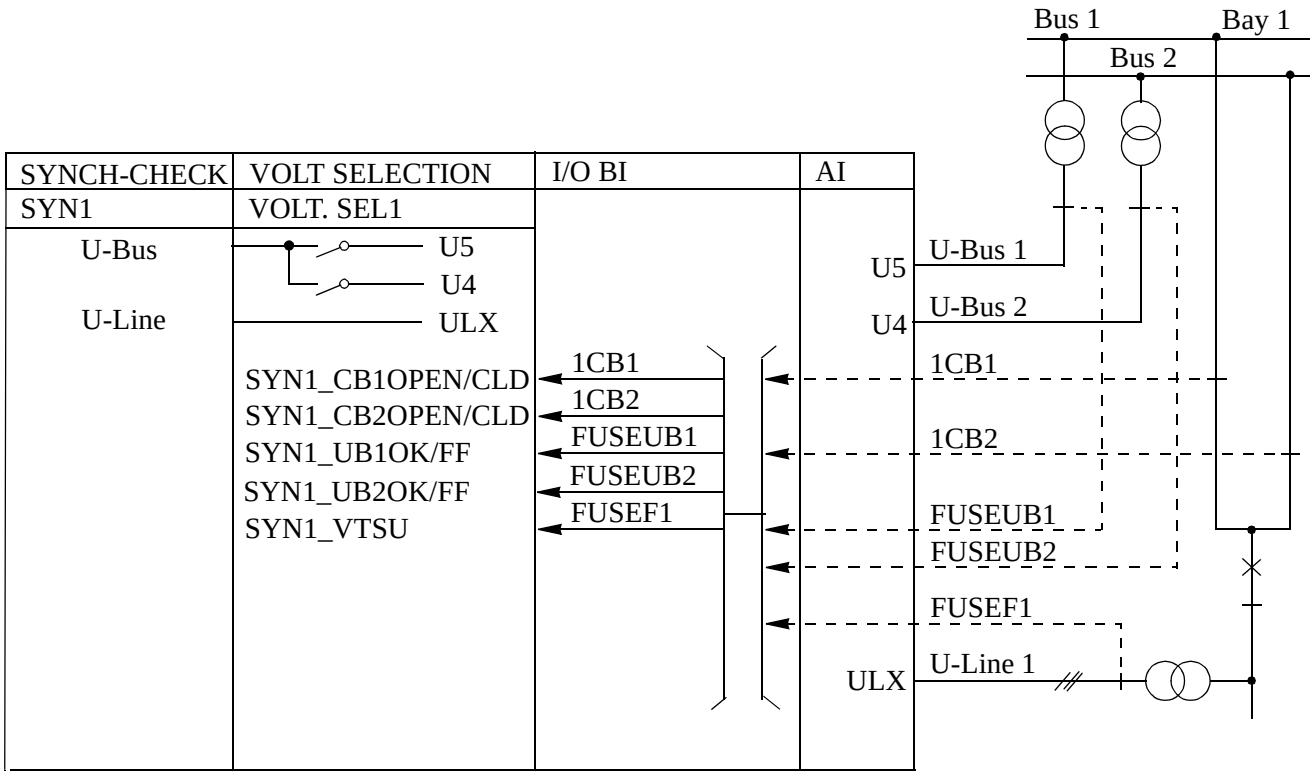

Figure 6: Voltage selection in a double bus arrangement.

1.4.2 Voltage selection for a double bus

Select DbleBus on the HMI. Figure 6: shows the principle for the connection arrangement. For the phasing and synchrocheck (SYN1) and energising check function, the voltages on the two busbars are selected by voltage selection (VOLT.SEL1) in the terminal unit. The bus voltage from

Bus 1 is fed to the U5 analogue single-phase input, and the bus voltage from Bus 2 is fed to the U4 analogue single-phase input. The line voltage transformers are connected as a three-phase voltage UL1, UL2, UL3 (ULx) to the input U-line.

The selection of the bus voltage is made by checking the position of the disconnectors' auxiliary contacts connected via binary inputs of the voltage selection logic inputs, SYN1-CB1OPEN (Disconnector section 1 open), SYN1-CB1CLD (Disconnector section 1 closed) and SYN1-CB2OPEN (Disconnector section 2 open), SYN1-CB2CLD (Disconnector section 2 closed).

1.4.2.1 Fuse failure and Voltage OK signals

The external fuse-failure signals or signals from a tripped fuse switch/ MCB are connected to binary inputs configured to inputs of the synchrocheck functions in the terminal. There are two alternative connection possibilities. Inputs named OK must be supplied if the voltage circuit is healthy. Inputs named FF must be supplied if the voltage circuit is faulty.

The SYN1-UB1(2)OK and SYN1-UB1(2)FF inputs are related to each busbar voltage. The SYN1-VTSU input is related to each line voltage. Configure them to the binary inputs that indicate the status of the external fuse failure of the busbar respectively the line voltage. Only the fuse failure of a selected voltage causes a blocking of the relevant energising check unit.

The user can use the FUSE-VTSU signal from the built-in optional selectable fuse-failure function as an alternative to the external fuse-failure signals.

In case of a fuse failure, the energising check (dead line check) is blocked via the inputs (SYN1-UB1OK/FF, SYN1-UB2OK/FF or SYN1-VTSU).

2 Theory of operation

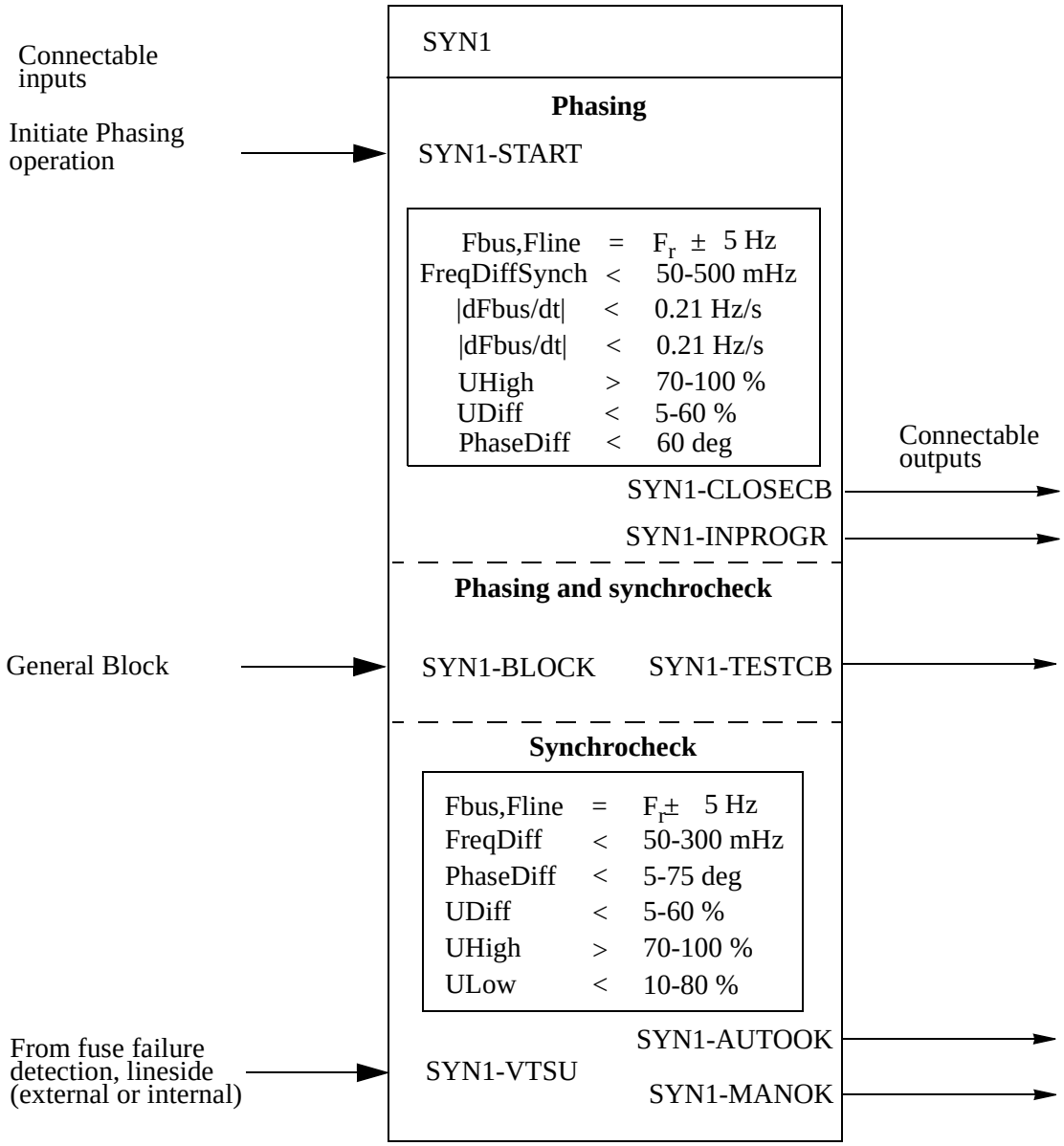

Figure 7: Input and output signals.

2.1 In- and output signals

Description of input and output signals for the phasing and synchrocheck function.

Input signals	Description
SYN1-BLOCK	General block input from any external condi tion, that should block the phasing and the synchrocheck.
SYN1-VTSU	The SYNC function cooperates with the FUSE-VTSU connected signal, which is the built-in optional fuse failure detection. It can also be

	connected to external condition for fuse failure. This is a blocking condition for the energising function.
SYN1-START	The signal initiates the phasing operation. When initiated the function continues until the SYN1-CLOSECB pulse is submitted or it is stopped by the SYN1-BLOCK signal. In test mode (SYN1-TESTCB) ends the phasing operation.

Output signals	**Description**
SYN1-TESTCB	Output when the function is in test mode. In test mode a complete phasing sequence is performed except for closing of the circuit breaker. The output signal SYN1-TESTCB indicates when the SYN1-CLOSECB signal would have been submitted from the phasing function or when the conditions for paralleling are fulfilled, from the synchro-check function
SYN1-CLOSECB	Close breaker command from phasing. Used to the circuit breaker or to be connected to the auto-reclosing function.
SYN1-INPROGR	The signal is high when a phasing operation is in progress, i.e from the moment a SYN1-START is received until the operation is terminated. The operation is teminated when SYN1-CLOSECB or SYN1-TESTCB has been submitted or if a SYN1-BLOCK is received.
SYN1-AUTOOK	Synchrocheck/energising OK. The output signal is high when the synchro-check conditions set on the HMI are fulfilled. It can also include the energising condition, if selected. The signal can be used to release the autorecloser before closing attempt of the circuit breaker. It can also be used as a free signal.
SYN1-MANOK	Same as above but with alternative settings of the direction for energising to be used during manual closing of the circuit breaker.

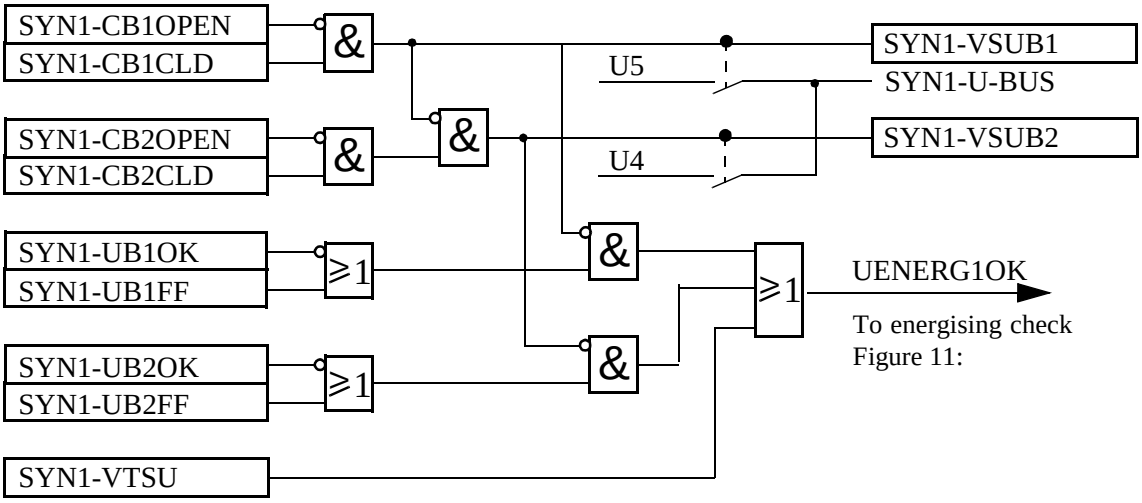

Figure 8: Simplified voltage selection logic in a double bus, single breaker arrangement.

Description of the input and output signals shown in the above simplified logic diagrams for voltage selection:

Input signal	**Description**
SYN1-CB1OPEN	Disconnector section 1 of Bay 1 open. Connected to the auxiliary contacts of a disconnector section in a double-bus, single breaker arrangement, to inform the voltage selection about the positions.
SYN1-CB1CLD	Disconnector section 1 of Bay 1 closed. Connected to the auxiliary contacts of a disconnector section in a double-bus, single breaker arrangement to inform the voltage selection about the positions.
SYN1-CB2OPEN	Same as above but for disconnector section 2.
SYN1-CB2CLD	Same as above but for disconnector section 2.
SYN1-UB1FF	External fuse failure input from busbar voltage Bus 1 (U5). This signal can come from a tripped fuse switch (MCB) on the secondary side of the voltage transformer. In case of a fuse failure, the energising check is blocked.
SYN1-UB1OK	No external voltage fuse failure (U5). Inverted signal.
SYN1-UB2FF	External fuse failure input from busbar voltage Bus 2 (U4). This signal can come from a tripped fuse switch (MCB) on the secondary side of the voltage transformer. In case of fuse failure, the energising check is blocked.

SYN1-UB2OK	No external voltage fuse failure (U4). Inverted signal.
SYN1-VTSU	Internal fuse failure detection or configured to a binary input indicating external fuse failure of the UL1, UL2, UL3 line-side voltage. Blocks the energising function.

Output signals	**Description**
SYN1-VSUB1	Signal for indication of voltage selection from Bus 1 voltage.
SYN1-VSUB2	Signal for indication of voltage selection from Bus 1 voltage.

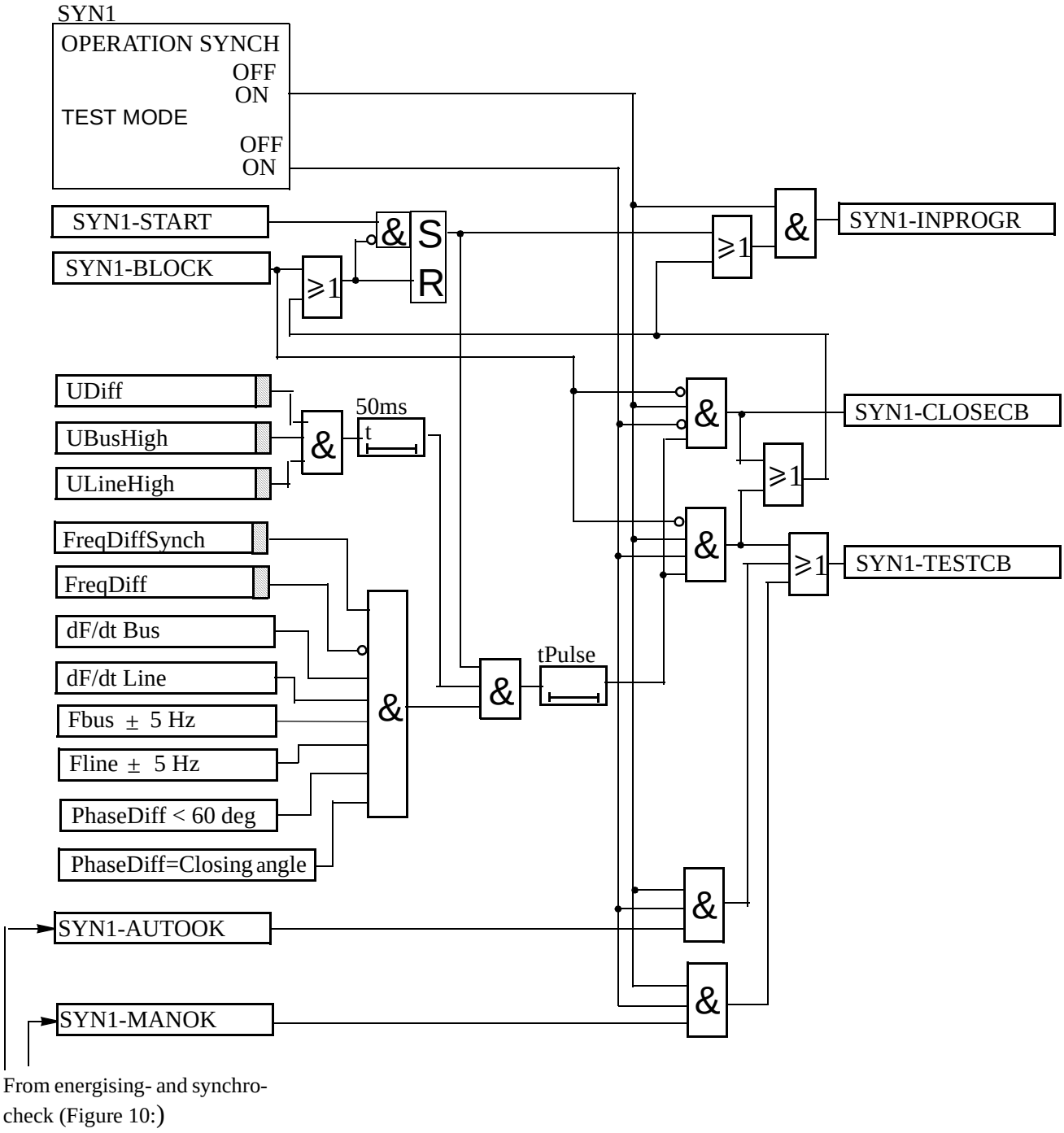

Figure 9: Simplified logic diagram - Phasing

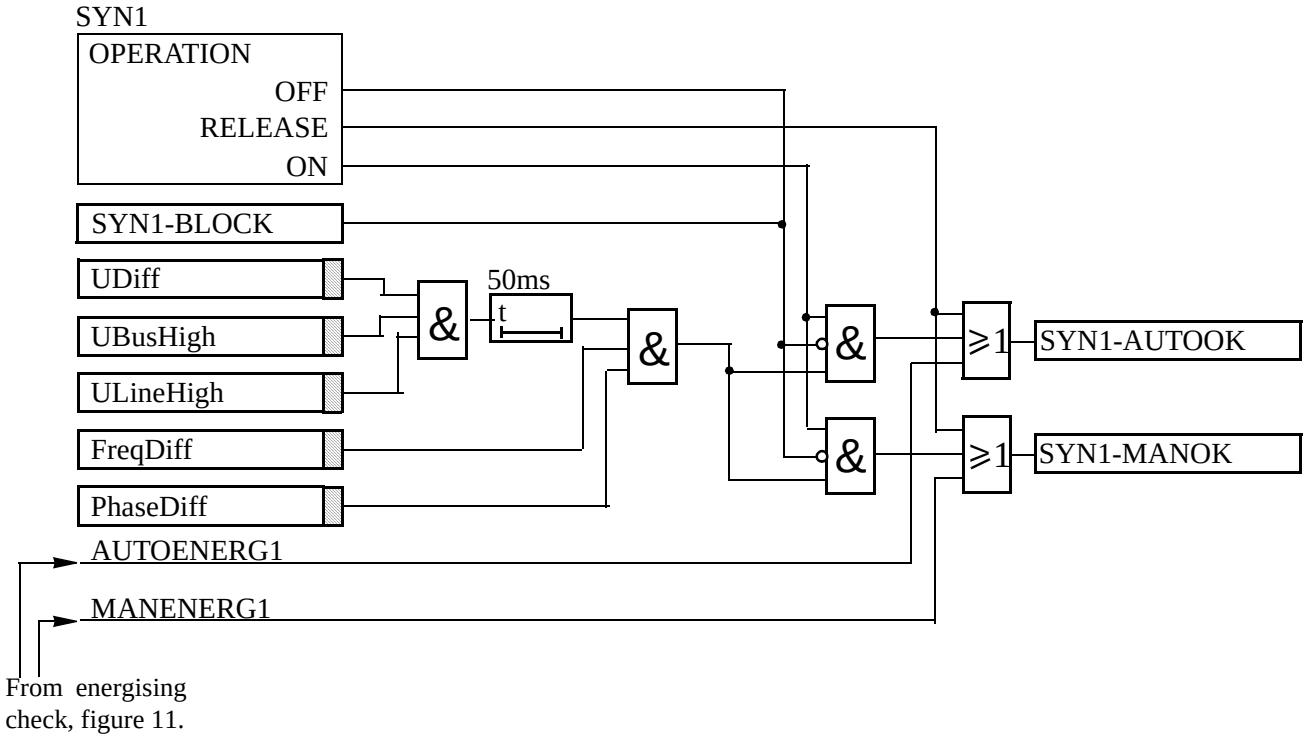

Figure 10: Simplified logic diagram - Synchrocheck

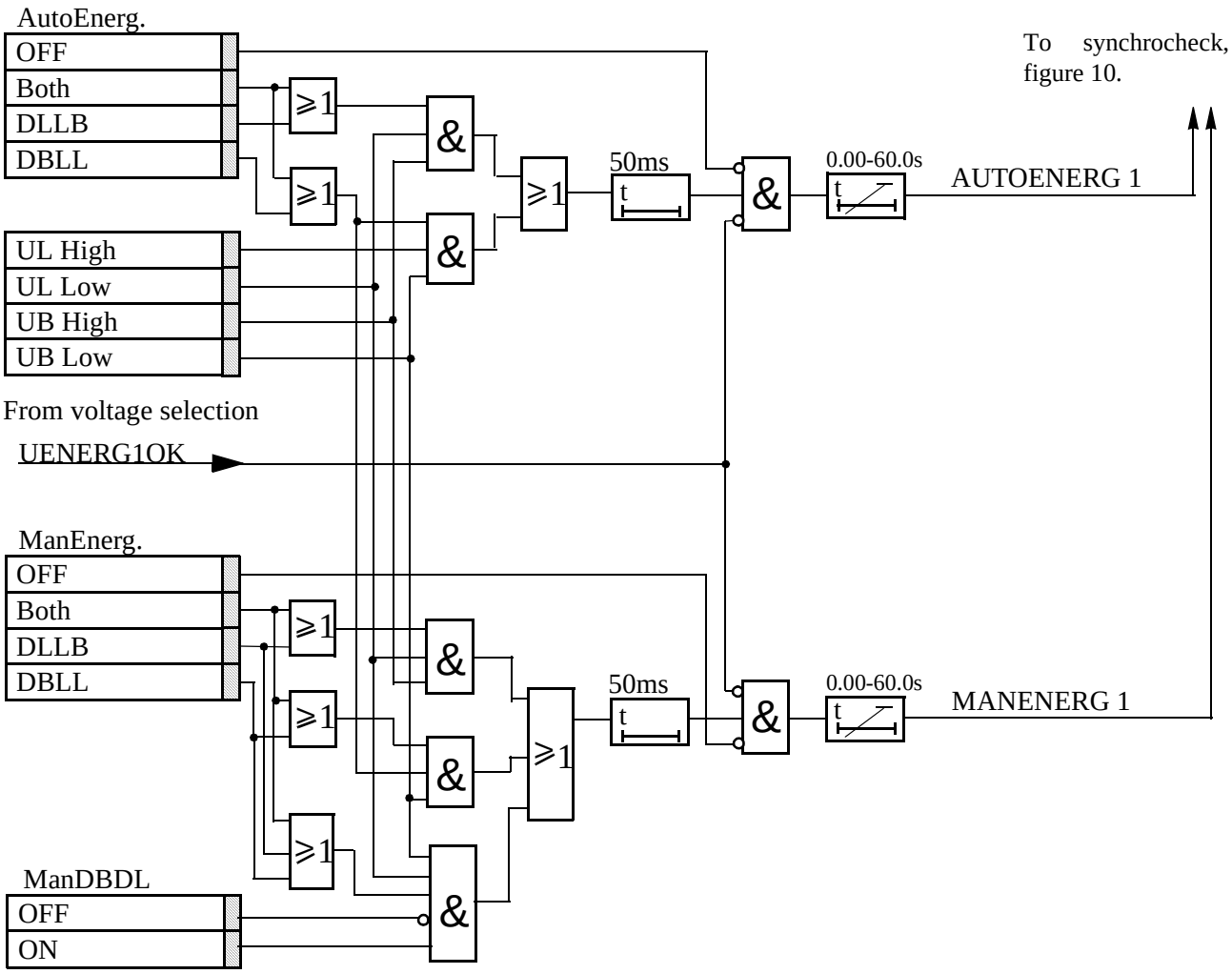

Figure 11: Simplified logic diagram - Energising check

3 Setting

The setting parameters are accessible through the HMI. The parameters for the phasing and synchrocheck function are found in the MMI tree under:

Settings
Functions
Group n (n=1-4)
SynchroCheck
SynchroCheck1

3.1 Operation

Off	The synchrocheck function is off and the output is low.
Release	There are fixed, high output signals SYN1-AUTOOK = 1 and SYN1-MANOK = 1.
On	The synchro-check function is in service and the output signal depends on the input conditions.

3.2 Input phase

The measuring phase of the UL1, UL2, UL3 line voltage, which can be of a single-phase (phase-neutral) or two-phases (phase-phase).

3.3 PhaseShift

This setting is used to compensate for a phase shift caused by a line transformer between the two measurement points for UBus and ULine. The set value is added to the measured phase difference. The bus voltage is reference voltage.

3.4 URatio

The URatio is defined as URatio=UBus/ULine. A typical use of the setting is to compensate for the voltage difference caused if wished to connect the UBus phase-phase and ULine phase-neutral. The “Input phase”-setting should then be set to phase-phase and the “URatio”-setting to sqr3=1.732. This setting scales up the line voltage to equal level with the bus voltage.

3.5 USelection

Selection of single or double bus voltage-selection logic.

3.6 AutoEnerg and ManEnerg

Two different settings can be used for automatic and manual closing of the circuit breaker.

Off	The energising condition is not used, only the synchrocheck.
DLLB	The line voltage U-line is low, below (10-80% U1b) and the bus voltage U-bus is high, above (70-100% U1b).

DBLL	The bus voltage U-bus is low, below (10-80% U1b) and the line voltage U-line is high, above (70-100% U1b).
Both	Energising can be done in both directions, DLLB or DBLL.
tAutoEnerg	The required consecutive time of fulfillment of the energising condition to achieve SYN1-AUTOOK.
tManEnerg	The required consecutive time of fulfillment of the energising condition to achieve SYN1-MANOK.

3.7 ManDBDL

If the parameter is set to “On”, closing is enabled when Both U-Line and U-bus are below ULow and ManEnerg is set to “DLLB”, “DBLL” or “Both”.

3.8 OperationSynch

Off	The phasing function is off and all outputs are low.
On	The phasing function is in service and the output signals depends on the input conditions.

3.9 ShortPulse

Off	The closing pulse issued to the circuit breaker will be of length=tPulse.
On	The closing pulse issued to the circuit breaker will be of length=one cycle time in the internal logic.

4 Testing

At periodical checks, the functions should preferably be tested with the used settings. To test a specific function, it might be necessary to change some setting parameters, for example:

- AutoEnerg = On/Off/DLLB/DBLL/Both
- ManEnerg = Off
- Operation = Off, On

The tests explained in section “Synchrocheck tests” on page 425 describe the settings, which can be used as references during testing, are presented before the final settings are specified. After testing, restore the equipment to the normal or desired settings.

4.1 Test equipment

A secondary injection test set with the possibility to alter the phase angle by regulation of the resistive and reactive components is needed. Here, the phase angle meter is also needed. To perform an accurate test of the frequency difference, a frequency generator at one of the input voltages is needed. The tests can also be performed with the computer-aided test system FREJA.

FREJA has a specially designed program for evaluating the synchrocheck function. Figure 12: shows the general test connection principle, which can be used during testing. This description describes the test of the version intended for one bay.

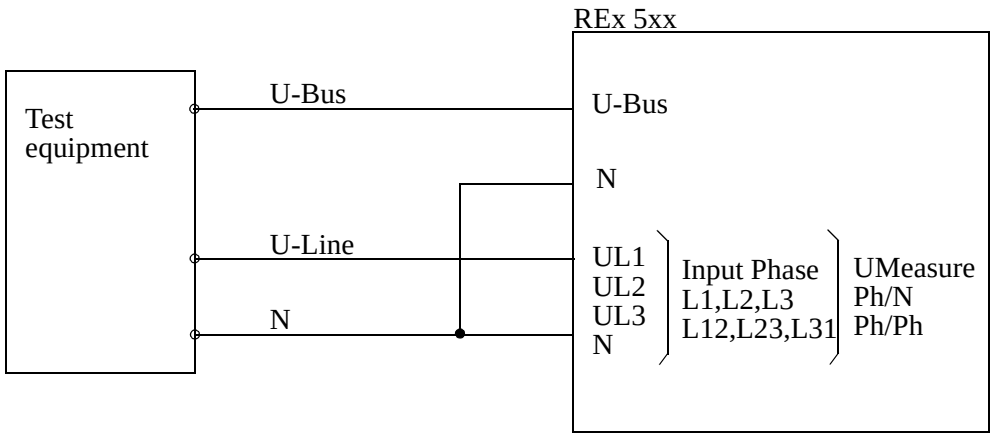

Figure 12: General test connection for phasing and synchrocheck with three-phase voltage connected to the line side.

4.2 Phasing tests

These voltage inputs are used:

U-line UL1, UL2 or UL3 voltage input on the terminal.

U-bus U5 voltage input on the terminal

These HMI settings can be used during the test if the final setting is not determined:

1 Set these HMI settings, which are found under:

Settings
Functions
Group n (n=1-4)
SynchroCheck
SynchroCheck1

Table 1: Test settings for phasing

Parameter:	**Setting:**
Operation	Off
InputPhase	UL1
USelection	SingleBus
PhaseShift	0 deg
URatio	1.00
AutoEnerg	Off
ManEnerg	Off
ManDBDL	Off
UHigh	70% U1b
ULow	40% U1b
FreqDiff	0.05 Hz
PhaseDiff	45°
UDiff	30% U1b
tAutoEnerg	0.5 s
tManEnerg	0.5 s
OperationSynch	On
ShortPulse	Off
FreqDiffSynch	0.40 Hz
tPulse	0.20 s
tBreaker	0.20 s

4.2.1 Test of frequency difference

The frequency difference is set at 0.40 Hz on the HMI, and the test should verify that operation is achieved when the FreqDiffSynch frequency difference is lower than 0.40 Hz.

- Apply voltages U-line (UL1) = 80% U1b, f-line=50.0 Hz and U-Bus (U5) = 80% U1b, f-bus=50.3 Hz
- Check that a closing pulse is submitted with length=0.20 sec. and at closing angle=360 * 0.20 * 0.40=29 deg
- Repeat with U-Bus (U5) = 80% U1b, f-bus=50.5 Hz to verify that the function doesn't operate when freq.diff is above limit.
- Repeat with different settings on tBreaker and FreqDiffSynch. Make sure that the calculated closing angle is less than 60 deg. Verify that closing command is issued at the correct phase angle when the frequency difference is less than the set value.

4.3 Synchrocheck tests

4.3.1 Test of voltage difference

Set the voltage difference at 30% U1b on the HMI, and the test should check that operation is achieved when the voltage difference UDiff is lower than 30% U1b.

These voltage inputs are used:

U-line UL1, UL2 or UL3 voltage input on the terminal.

U-bus U5 voltage input on the terminal

These HMI settings can be used during the test if the final setting is not determined:

1 Set these HMI settings, which are found under:

Settings
Functions
Group n (n=1-4)
SynchroCheck
SynchroCheck1

Table 2: Test settings for voltage difference

Parameter:	Setting:
Operation	On
InputPhase	UL1
USelection	SingleBus
PhaseShift	0 deg
URatio	1.00
AutoEnerg	Off

Table 2: Test settings for voltage difference

ManEnerg	Off
ManDBDL	Off
UHigh	70% U1b
ULow	40% U1b
FreqDiff	0.05 Hz
PhaseDiff	45°
UDiff	30% U1b
tAutoEnerg	0.5 s
tManEnerg	0.5 s
OperationSynch	Off
ShortPulse	Off
FreqDiffSynch	0.4 Hz
tPulse	0.2 s
tBreaker	0.2 s

2 **Test with UDiff = 0%**
- Apply voltages U-line (UL1) = 80% U1b and U-Bus (U5) = 80% U1b.
- Check that the SYN1-AUTOOK and SYN1-MANOK outputs are activated.
- The test can be repeated with different voltage values to verify that the function operates within UDiff <30%.

3 **Test with UDiff = 40%**
- Increase the U-bus (U5) to 120% U1b, and the U-line (UL1) = 80% U1b.
- Check that the two outputs are **NOT** activated.

4 **Test with UDiff = 20%, Uline < UHigh**
- Decrease the U-line (UL1) to 60% U1b and the U-bus (U5) to be equal to 80% U1b.
- Check that the two outputs are **NOT** activated.

5 **Test with URatio=0.20**
- Run the test under section 2 to 4 but with U-bus voltages 5 times lower.

6 **Test with URatio=5.00**
- Run the test under section 2 to 4 but with U-line voltages 5 times lower.

4.3.2 Test of phase difference

The phase difference is set at 45° on the HMI, and the test should verify that operation is achieved when the PhaseDiff (phase difference) is lower than 45°.

1 Set these HMI settings:

Table 3: Test settings for phase difference

PARAMETER:	SETTING:
Operation	On
InputPhase	UL1
USelection	SingleBus
PhaseShift	0 deg
URatio	1.00
AutoEnerg	Off
ManEnerg	Off
UHigh	70% U1b
ULow	40% U1b
FreqDiff	0.05 Hz
PhaseDiff	45°
UDiff	15% U1b
tAutoEnerg	0.5 s
tManEnerg	0.5 s
ManDBDL	Off
OperationSynch	Off
ShortPulse	Off
FreqDiffSynch	0.4 Hz
tPulse	0.2 s
tBreaker	0.2 s

2 **Test with PhaseDiff = 0°**
Apply voltages U-line (UL1) = 100% U1b and U-bus (U5) = 100% U1b, with a phase difference equal to 0° and a frequency difference that is lower than 50 mHz.
Check that the SYN1-AUTOOK and SYN1-MANOK outputs are activated.

3 The test can be repeated with other PhaseDiff values to verify that the function operates for values lower than the set ones. By changing the phase angle on U1 connected to U-bus, between +/- 45°. The user can check that the two outputs are activated for a PhaseDiff lower than 45°. It should not operate for other values. See Figure 13:.

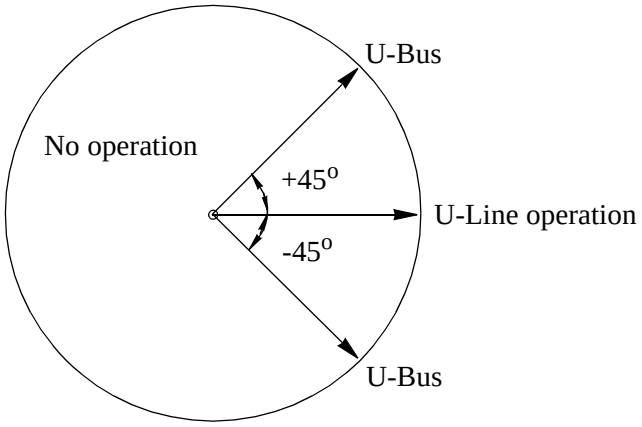

Figure 13: Test of phase difference.

4 Apply a PhaseShift setting of 10 deg. Change the phase angle between +55 and -35 and verify that the two outputs are activated for phase differences between these values but not for phase differences outside. See Figure 14:.

Change the PhaseShift setting to 350 deg. Change the phase angle between +35 and -55 and verify as above.

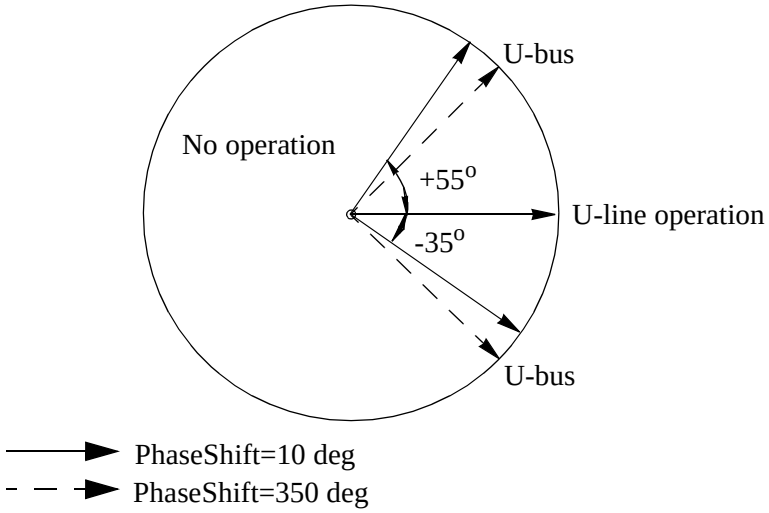

Figure 14: Test of phase difference.

4.3.3 Test of frequency difference

The frequency difference is set at 50 mHz on the HMI, and the test should verify that operation is achieved when the FreqDiff frequency difference is lower than 50 mHz.

1 Use the same HMI setting as in section “Test of phase difference” on page 426.

2 **Test with FreqDiff = 0 mHz**
Apply voltages U-Line (UL1) equal to 100% U1b and U-Bus (U5) equal to 100% U1b, with a frequency difference equal to 0 mHz and a phase difference lower than 45°. Check that the SYN1-AUTOOK and SYN1-MANOK outputs are activated.

3 **Test with FreqDiff = 1Hz**
Apply voltage to the U-line (UL1) equal to 100% U1b with a frequency equal to 50 Hz and voltage U-bus (U5) equal to 100% U1b, with a frequency equal to 49 Hz.
Check that the two outputs are **NOT** activated.

4 The test can be repeated with different frequency values to verify that the function operates for values lower than the set ones. If the FREJA program, *Test of synchronising relay*, is used the frequency can be changed continuously.

Note! A frequency difference also implies a floating mutual-phase difference. So the SYN1-AUTOOK and SYN1-MANOK outputs might NOT be stable, even though the frequency difference is within set limits, because the phase difference is not stable!

4.3.4 Test of reference voltage

1 Use the same basic test connection as in Figure 12:. The UDiff between the voltage connected to U-bus and U-line should be 0%, so that the SYN1-AUTOOK and SYN1-MANOK outputs are activated first.
Change the U-Line voltage connection to UL2 without changing the setting on the HMI
Check that the two outputs are **NOT** activated.

2 The test can also be repeated by moving the U-line to the UL3 input.

4.4 Test of energising check

Use these voltage inputs:

U-line = UL1, UL2 or UL3 voltage input on the terminal.

U-bus = U5 voltage input on the terminal.

4.4.1 Test of dead line live bus (DLLB)

The test should verify that the energising function operates for a low voltage on the U-Line and for a high voltage on the U-bus. This corresponds to an energising of a dead line to a live bus.

Use these HMI settings during the test if the final setting is not determined.

1 Set these HMI settings:

Table 4: Test settings for DLLB

Parameter:	Setting:
Operation	On
InputPhase	UL1
PhaseShift	0 deg
URatio	1.00
USelection	SingleBus
AutoEnerg	DLLB
ManEnerg	DLLB
ManDBDL	Off
UHigh	80% U1b
ULow	40% U1b
FreqDiff	0.05 Hz
PhaseDiff	45°
UDiff	15% U1b
tAutoEnerg	0.5 s
tManEnerg	0.5 s
OperationSynch	Off
ShortPulse	Off
FreqDiffSynch	0.4 Hz
tPulse	0.2 s
tBreaker	0.2 s

2 Apply a single-phase voltage 100% U1b to the U-bus (U5), and a single-phase voltage 30% U1b to the U-line (UL1).

3 Check that the SYN1-AUTOOK and SYN1-MANOK outputs are activated.

4 Increase the U-Line (UL1) to 60% U1b and U-Bus(U5) to be equal to 100% U1b. The outputs should **NOT** be activated.

5 The test can be repeated with different values on the U-Bus and the U-Line.

4.4.2 Dead bus live line (DBLL)

The test should verify that the energising function operates for a low voltage on the U-bus and for a high one on the U-line. This corresponds to an energising of a dead bus from a live line.

1 Change the HMI settings AutoEnerg and ManEnerg to DBLL**.**

2 Apply a single-phase voltage of 30% U1b to the U-bus (U5) and a single-phase voltage of 100% U1b to the U-line (UL1).

3 Check that the SYN1-AUTOOK and SYN1-MANOK outputs are activated.

4 Decrease the U-line to 60% U1b and keep the U-bus equal to 30% U1b.
The outputs should **NOT** be activated.

5 The test can be repeated with different values on the U-bus and the U-line.

4.4.3 Energising in both directions (DLLB or DBLL)

1 Change the HMI settings AutoEnerg and ManEnerg to Both.

2 Apply a single-phase voltage of 30% U1b to the U-line (UL1) and a single-phase voltage of 100% U1b to the U-bus (U5).

3 Check that the “SYN1-AUTOOK” and “SYN1-MANOK” outputs are activated.

4 Change the connection so that the U-line (UL1) is equal to100% U1b and the U-bus (U5) is equal to 30% U1b.

5 The outputs should still be activated.

6 The test can be repeated with different values on the U-bus and the U-line.

7 Restore the equipment to normal or desired settings.

4.4.4 Dead bus Dead line (DBDL)

The test should verify that the energising function operates for a low voltage on both the U-bus the U-line, i.e closing of the breaker in a non energised system.

1 Set AutoEnerg to Off and ManEnerg to DBLL.

Set ManDBDL to On.

2 Apply a single-phase voltage of 30% U1b to the U-bus (U5) and a single-phase voltage of 30% U1b to the U-line (UL1).

3 Check that the SYN1-MANOK output is activated.

4 Increase the U-bus to 80% U1b and keep the U-line equal to 30% U1b.
The outputs should **NOT** be activated.

5 Repeat the test with ManEnerg set to DLLB and Both, and different values on the U-bus and the U-line.

4.4.5 Test of voltage selection

This test should verify that the correct voltage is selected for the measurement in the energising function used in a double-bus arrangement. Apply a single-phase voltage of 30% U1b to the U-line (UL1) and a single-phase voltage of 100% U1b to the U-bus (U5).

If the SYN1-UB1/2OK inputs for the fuse failure are used, normally they must be activated, thus activated and deactivated must be inverted in the description of tests below.

1 Set these HMI settings:

Table 5: Test settings for voltage selection

Parameter	Setting
Operation	On
InputPhase	UL1
USelection	DbleBus
PhaseShift	0 deg
URatio	1.00
AutoEnerg	Both
ManEnerg	Both
ManDBDL	Off
UHigh	80% U1b
ULow	40% U1b
FreqDiff	0,05 Hz
PhaseDiff	45°
UDiff	15% U1b
tAutoEnerg	0.5 s
tManEnerg	0.5 s
OperationSynch	Off
ShortPulse	Off
FreqDiffSynch	0.4 Hz
tPulse	0.2 s
tBreaker	0.2 s

2 Connect the signals below to binary inputs and binary outputs. Apply signals according to the table and verify that correct output signals are generated.

Table 6: Signals

VOLTAGE FROM BUS1 U5	VOLTAGE FROM BUS2 U4	BINARY INPUTS	CB1OPEN	CB1CLD	CB2OPEN	CB2CLD	UB1FF	UB2FF	VTSU	BINARY OUTPUTS	AUTOOK	MANOK	VSUB1	VSUB2
1	0		1	0	1	0	0	0	0		1	1	1	0
1	0		0	1	1	0	0	0	0		1	1	1	0
1	0		0	1	1	0	1	0	0		0	0	1	0
1	0		0	1	1	0	0	1	0		1	1	1	0
1	0		0	1	1	0	0	0	1		0	0	1	0
1	0		0	1	0	1	0	0	0		1	1	1	0
1	0		1	0	0	1	0	0	0		0	0	0	1
0	1		0	1	1	0	0	0	0		0	0	1	0
0	1		0	1	0	1	0	0	0		0	0	1	0
0	1		1	0	0	1	0	0	0		1	1	0	1
0	1		1	0	0	1	1	0	0		1	1	0	1
0	1		1	0	0	1	0	1	0		0	0	0	1
0	1		1	0	0	1	0	0	1		0	0	0	1
0	1		0	1	0	1	0	0	0		0	0	1	0

5 Appendix

5.1 Function block

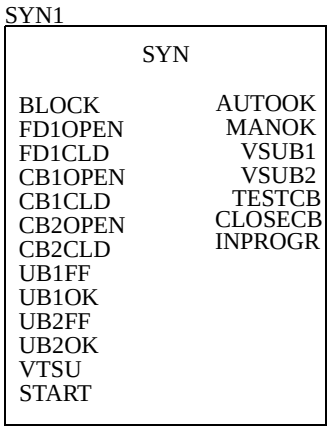

5.2 Signal list

Block	Signal	Type	Description
SYNx-	BLOCK	IN	Block of synchrocheck function x (x=1-4)
SYNx-	FD1OPEN	IN	Feeder disconnector 1 open
SYNx-	FD1CLD	IN	Feeder disconnector 1 closed
SYNx-	CB1OPEN	IN	Breaker section 1 open
SYNx-	CB1CLD	IN	Breaker section 1 closed
SYNx-	CB2OPEN	IN	Breaker section 2 open
SYNx-	CB2CLD	IN	Breaker section 2 closed
SYNx-	UB1FF	IN	External voltage fuse failure, bus 1
SYNx-	UB1OK	IN	External voltage fuse healthy, bus 1
SYNx-	UB2FF	IN	External voltage fuse failure, bus 2
SYNx-	UB2OK	IN	External voltage fuse healthy, bus 2
SYNx-	VTSU	IN	Block from internal fuse failure supervision or from external fuse failure of the line voltage.
SYNx-	START	IN	Initiate phasing operation
SYNx-	AUTOOK	OUT	Automatic synchronism/energising check OK
SYNx-	MANOK	OUT	Manual synchronism/energising check OK
SYNx-	VSUB1	OUT	Voltage selection from bus 1
SYNx-	VSUB2	OUT	Voltage selection from bus 2
SYNx-	TESTCB	OUT	Close circuit breaker test output
SYNx-	CLOSECB	OUT	Close circuit breaker pulse
SYNx-	INPROGR	OUT	Phasing operation in progress

5.3 Setting table

Parameter	Range	Unit	Default	Parameter description
Operation	Off, Release, On		Off	Synchrocheck function Off/Release/On
InputPhase	L1, L2, L3, L1-L2, L2-L3, L3-L1		L1	Select input voltage
UMeasure	Ph/N, Ph/Ph		Ph/N	Select input voltage Ph/N or Ph/Ph
PhaseShift	0-360	degrees	0	Phase shift between U-bus and U-line
URatio	0.20-5.00		1.00	Voltage ratio between U-bus and U-line
USelection	SingleBus, DbleBus		Single-Bus	Bus arrangement for voltage selection
AutoEnerg	Off, DLLB, DBLL, Both		Off	Auto energising/synchronising method
ManEnerg	Off, DLLB, DBLL, Both		Off	Manual energising/synchronising method
ManDBDL	Off, On		Off	Manual dead-bus and dead-line energising
UHigh	50-120	%	80	High voltage limit, as a percentage of Ub
ULow	10-100	%	40	Low voltage limit, as a percentage of Ub
FreqDiff	0.05-0.30	Hz	0.20	Frequency difference limit
PhaseDiff	5-75	degrees	20	Phase difference limit
UDiff	5-50	%	20	Voltage difference limit, as a percentage of Ub
tAutoEnerg	0.000-60.000	s	0.100	Auto energising time delay period
tManEnerg	0.000-60.000	s	0.100	Manual energising time delay period
Operation-Synch	Off, On		Off	Phasing function Off/On
ShortPulse	Off, On		Off	Short pulse Off/On
FreqDiff-Synch	0.05-0.50	Hz	00.30	Frequency diff limit for phasing
tPulse	0.000-60.000	s	0.200	Breaker closing pulse duration
tBreaker	0.02-0.50	s	0.20	Closing time of the breaker

1 Application

1.1 Phasing

The phasing function is used to close a circuit breaker when two asynchronous systems are going to be connected. The close breaker command is issued at the optimum time when conditions across the breaker are satisfied in order to avoid stress on the network and its components.

The systems are defined to be asynchronous when the frequency difference between bus and line is larger than an adjustable parameter. If the frequency difference is less than this treshold value the system is defined to have a parallel circuit and the synchro-check function is used.

The phasing function measures the difference between the U-line and the U-bus. It operates and issues a closing command to the circuit breaker when the calculated closing angle is equal to the measured phase angle and these conditions are simultaneously fulfilled.

- The voltages U-line and U-bus are higher than the set value for UHigh of the base voltage U1b.
- The difference in the voltage is smaller than the set value of UDiff.
- The difference in frequency is less than the set value of FreqDiff-Synch and larger than the set value of FreqDiff. If the frequency is less than FreqDiff the synchro-check is used. The bus and line frequencies must also be within a range of ±5 Hz from the rated frequency.
- The frequency rate of change is less than 0.21 Hz/s for both U-bus and U-line.
- The closing angle is less than approx. 60 degrees.

The phasing function compensates for measured slip frequency as well as the circuit breaker closing delay. The phase advance is calculated continuously by the following formula:

$$\textit{Closing angle} = 360° \cdot \textit{Meas. freq. diff.} \cdot \textit{tBreaker} \qquad \text{(Equation 1)}$$

Closing angle is the change in angle during breaker closing delay.

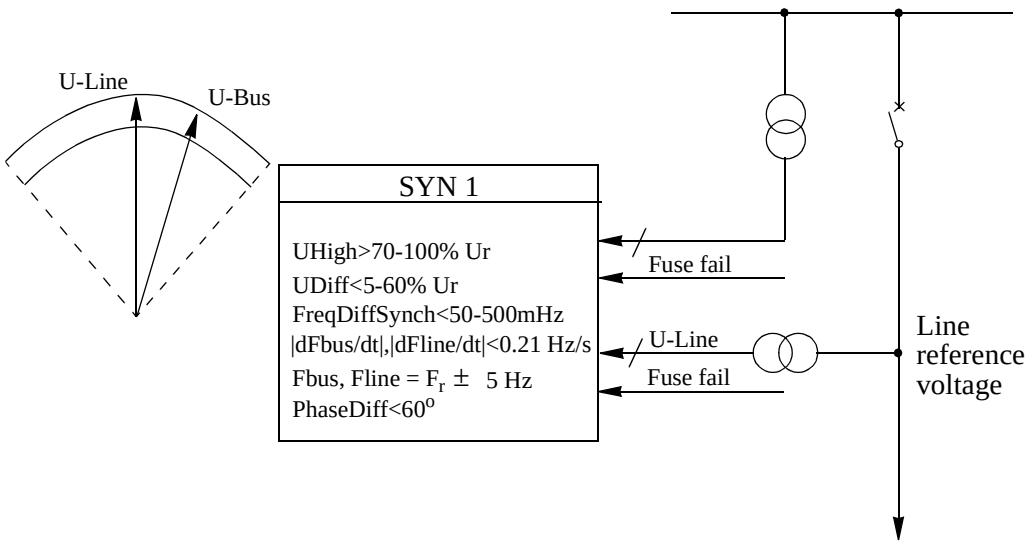

Figure 1: Phasing.

1.2 Synchrocheck

The synchrocheck function is used for controlled closing of a circuit in an interconnected network. When used, the function gives an enable signal at satisfied voltage conditions across the breaker to be closed. When there is a parallel circuit established, the frequency is normally the same at the two sides of the open breaker. At power swings, e.g. after a line fault, an oscillating difference can appear. Across the open breaker, there can be a phase angle and a voltage amplitude difference due to voltage drop across the parallel circuit or circuits. The synchrocheck function measures the difference between the U-line and the U-bus, regarding voltage (UDiff), phase angle (PhaseDiff), and frequency (FreqDiff). It operates and permits closing of the circuit breaker when these conditions are simultaneously fulfilled.

- The voltages U-line and U-bus are higher than the set value for UHigh of the base voltage U1b.
- The differences in the voltage and phase angles are smaller than the set values of UDiff and PhaseDiff.
- The difference in frequency is less than the set value of FreqDiff. The bus frequency must also be within a range of ±5 Hz from the rated frequency.

The function can be used as a condition to be fulfilled before the breaker is closed at manual closing and/or together with the autorecloser function.

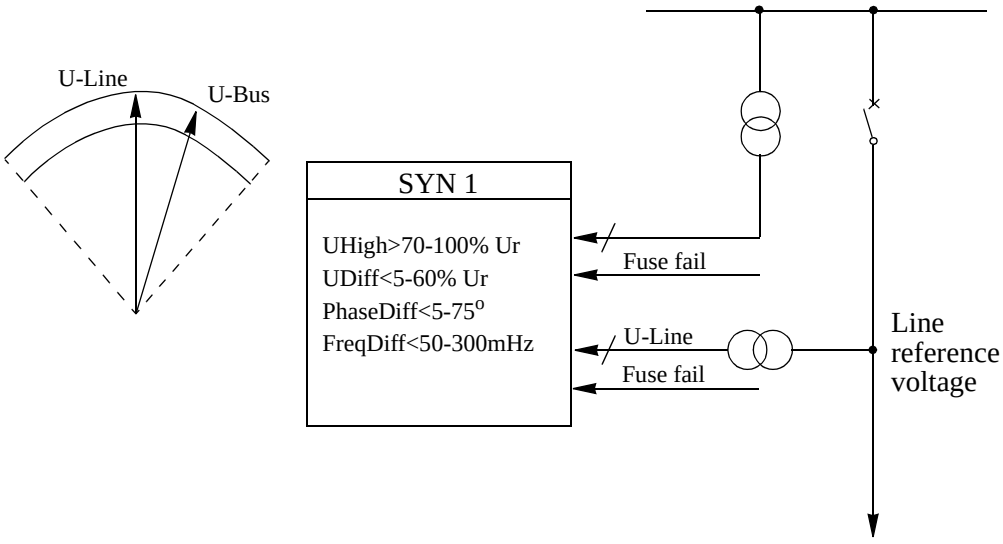

Figure 2: Synchrocheck

The voltage circuits are arranged differently depending on the number of synchrocheck functions that are included in the terminal.

The reference voltage can be single-phase L1, L2, L3 or phase-phase L1-L2, L2-L3, L3-L1. The U-bus voltage must then be connected to the same phase or phases as are chosen on the HMI. Figure 3: shows the voltage connection.

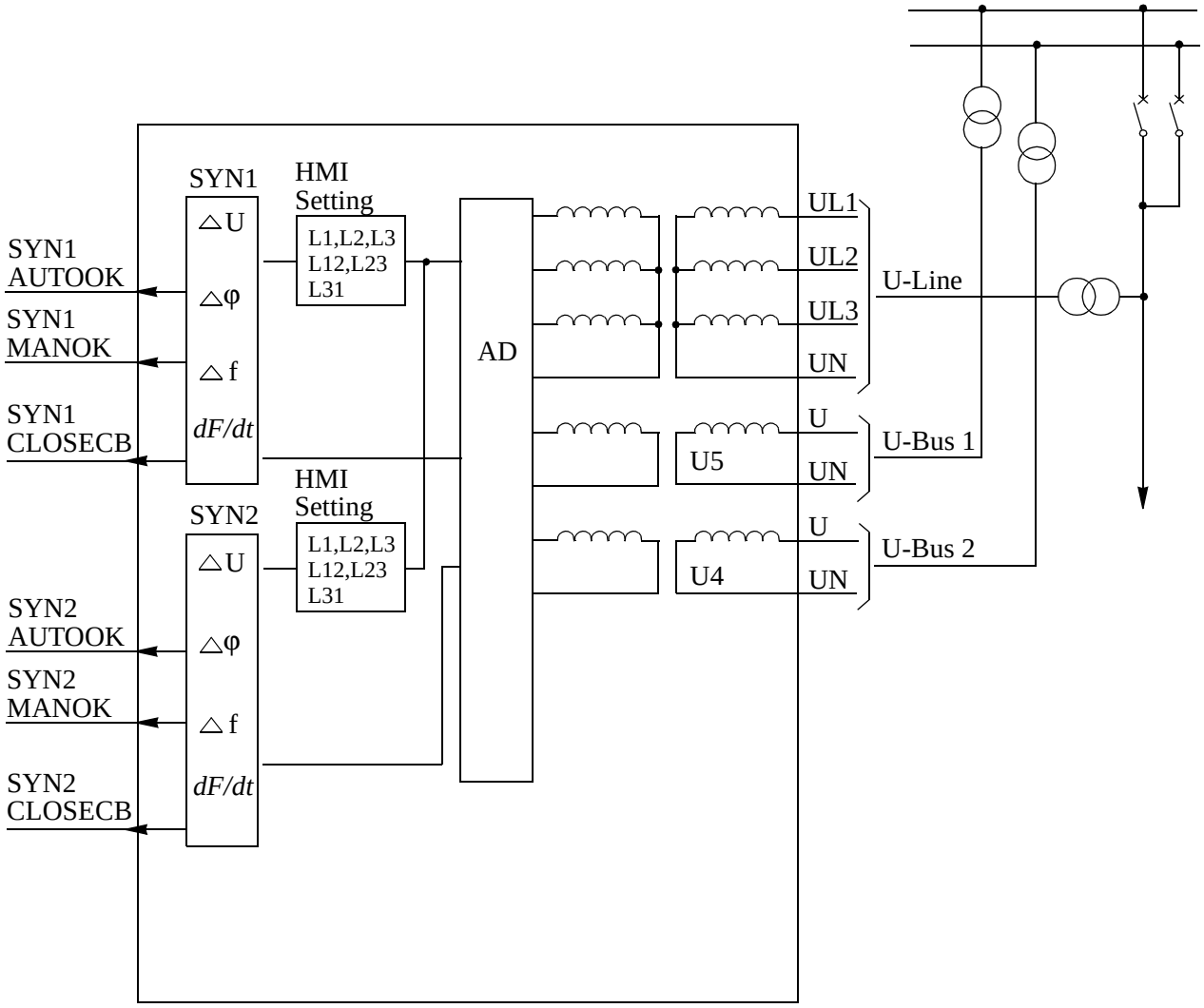

Figure 3: Connection of the phasing and synchrocheck function for one bay.

1.3 Energising check

The energising check is made when a disconnected line is to be connected to an energised section of a network, see Figure 4:. The check can also be set to allow energisation of the busbar or in both directions.

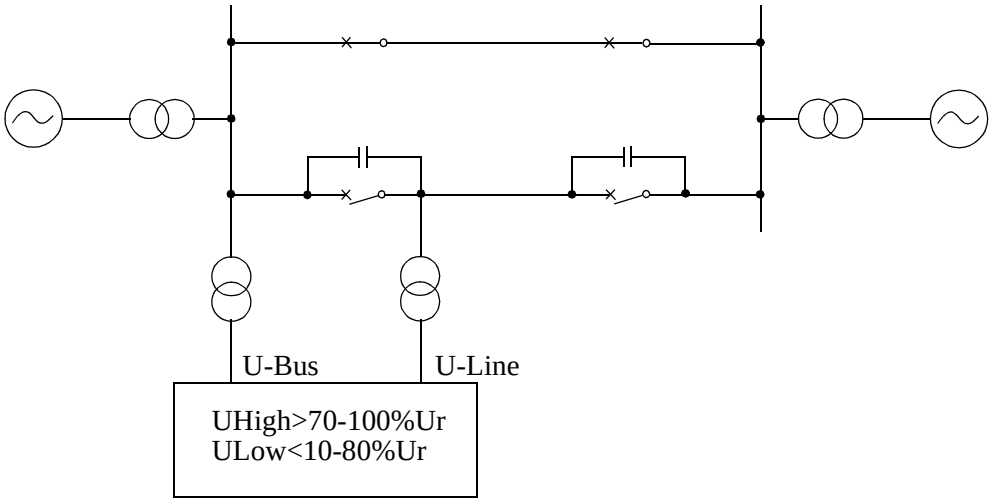

Figure 4: Principle for energising check.

The voltage level considered to be a non-energised bus or line is set on the HMI. An energising can occur — depending on the set direction of the energising function. There are separate settable limits for energised (live) condition, UHigh, and non-energised (dead) ULow conditions. The equipment is considered energised if the voltage is above the set value UHigh (e.g. 80% of base voltage), and non-energised if it is below the set value, ULow (e.g. 30% of the base voltage) The user can set the UHigh condition between 70-100% U1b and the ULow condition between 10-80% U1b.

A disconnected line can have a considerable potential due to, for instance, induction from a line running in parallel, or by being fed via the extinguishing capacitors in the circuit breakers. This voltage can be as high as 30% or more of the rated voltage of the line.

The energising operation can be set to operate in either direction over the circuit breaker, or it can be permitted to operate in both directions. Use the AutoEnerg and ManEnerg HMI setting to select the energising operation in:

- Both directions (Both)
- Dead line live bus (DLLB)
- Dead bus live line (DBLL)

The voltage check can also be set Off. A closing impulse is issued to the circuit breaker if one of the U-line or U-bus voltages is High and the other is Low, that is, when only one side is energised. The user can set AutoEnerg and ManEnerg to enable different conditions during automatic and manual closing of the circuit breaker.

In the manual mode it is also possible to allow closing when both sides of the breaker are dead. This is done by setting the parameter ManDBDL = “On” **and** ManEnerg to “DLLB”, “DBLL” or “Both”.

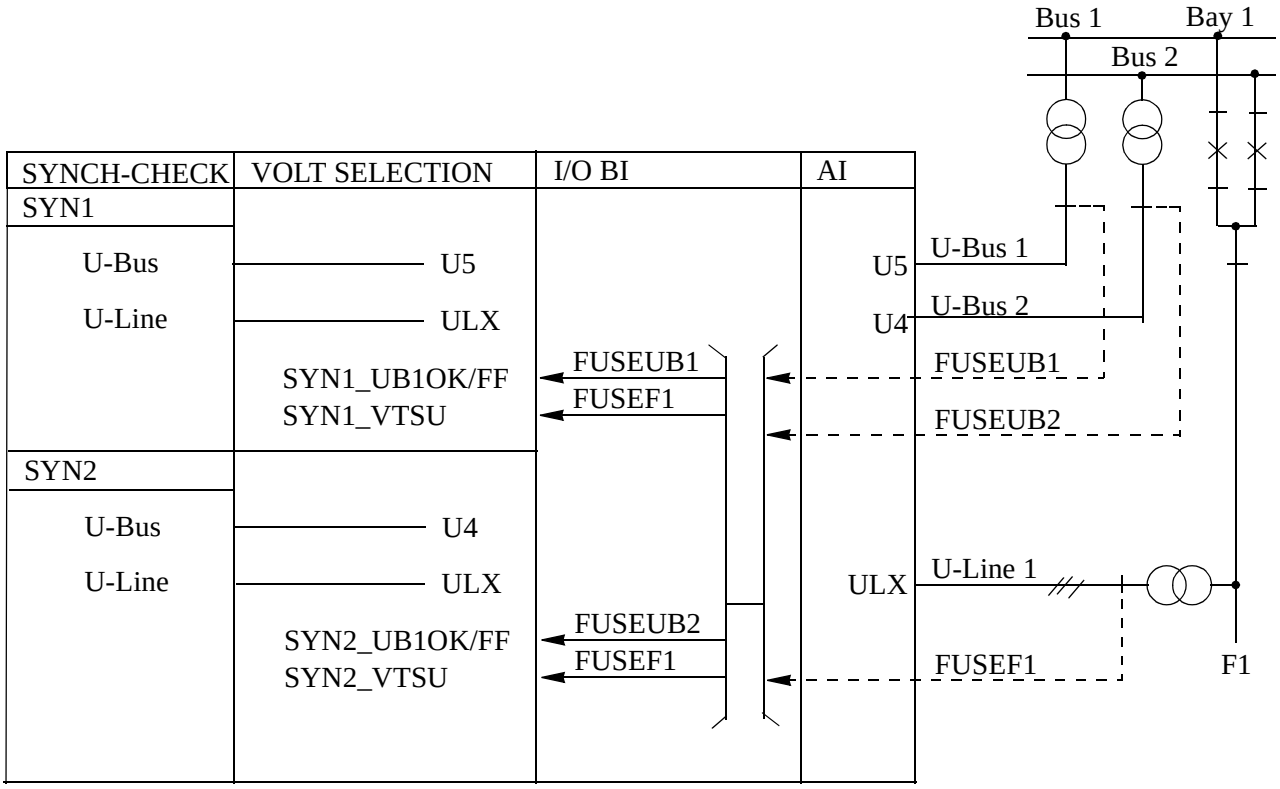

Figure 5: Voltage connection in a double busbar double breaker arrangement.

1.4 Voltage connection

The princip for the connection arrangement is shown in Figure 5:. One terminal unit is used for the two circuit breakers in one bay. There is one voltage transformer at each side of the circuit breaker, and the voltage transformer circuit connections are straight forward, without any special voltage selection.
For the synchrocheck and energising check, the voltage from Bus 1 (SYN1-U-bus) is connected to the single-phase analogue input (U5) on the terminal and the voltage from Bus 2 (SYN2-U-bus) is connected to the single-phase analogue input (U4).

The line voltage transformers are connected as a three-phase voltage to the analogue inputs UL1, UL2, UL3 (SYN1(2)-U-Line) voltage.

The synchronism condition is set on the HMI of the terminal unit, and the voltage is taken from Bus 1 and the Line or from Bus 2 and the Line (U-line). This means that the two synchro-check units are operating without any special voltage selection, but with the same line (U-line) voltage.

The configuration of internal signals, inputs, and outputs may be different for different busbar systems, and the actual configuration for the substation must be done during engineering of the terminal.

1.4.1 Fuse failure and Voltage OK signals

The external fuse-failure signals or signals from a tripped fuse switch/ MCB are connected to binary inputs configured to inputs of the synchro-check functions in the terminal. There are two alternative connection possibilities. Inputs named OK must be supplied if the voltage circuit is healthy. Inputs named FF must be supplied if the voltage circuit is faulty.

The SYNx-UB1OK and SYNx-UB1FF inputs are related to the busbar voltage. Configure them to the binary inputs that indicate the status of the external fuse failure of the busbar voltage. The SYNx-VTSU input is related to the line voltage from each line.

The user can use the FUSE-VTSU signal from the built-in optional selectable fuse-failure function as an alternative to the external fuse-failure signals.

In case of a fuse failure, the energising check (dead line- check) is blocked via the input (SYN1-UB1OK/FF or SYN1-VTSU).

2 Theory of operation

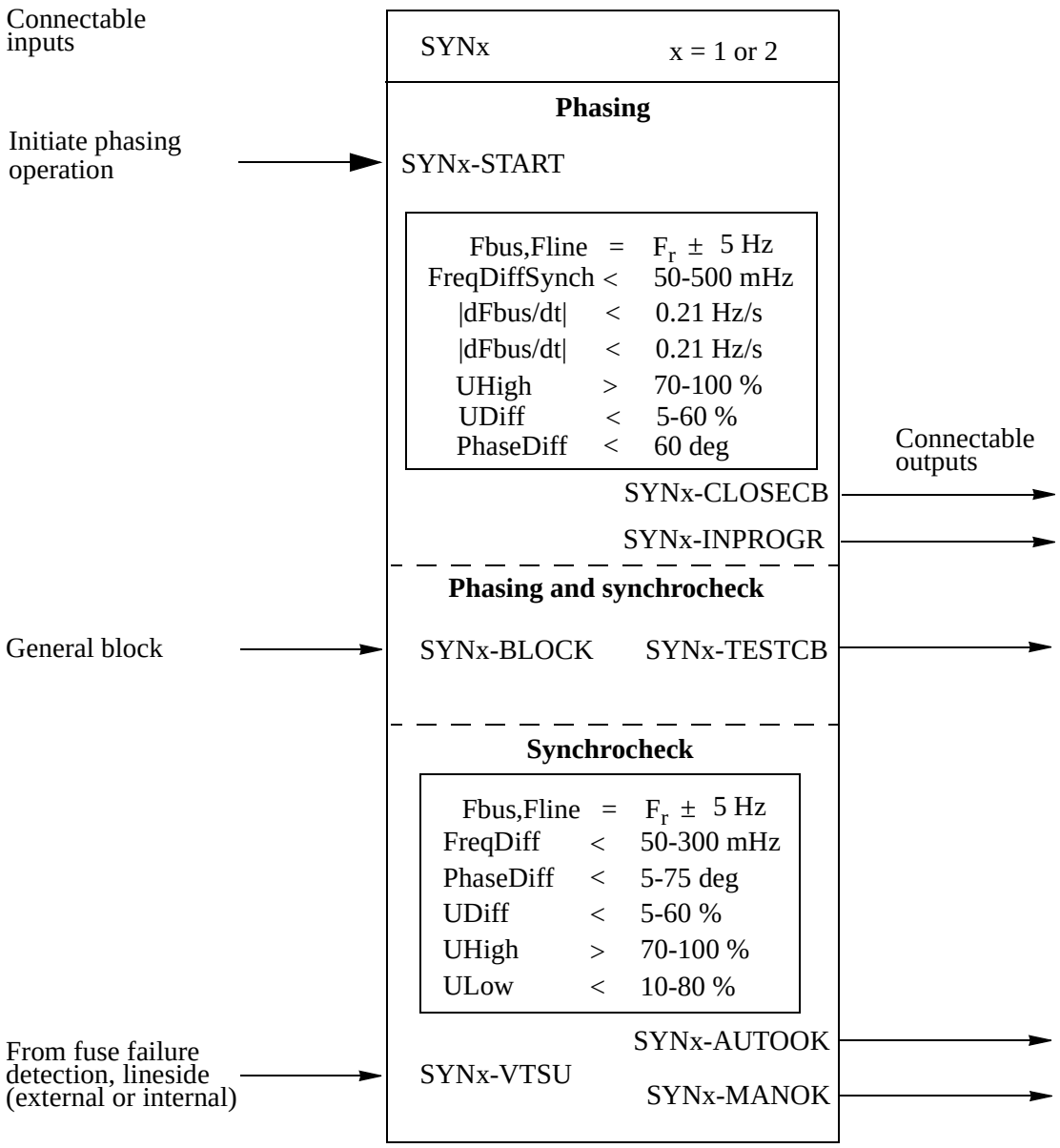

Figure 6: Input and output signals.

2.1 Input and output signals

Description of input and output signals for the phasing and synchro-check function.

Input signals	Description
SYNx-BLOCK	General block input from any external condi tion, that should block the phasing and the syn-chrocheck.
SYNx-VTSU	The SYNC function cooperates with the FUSE-VTSU connected signal, which is the built-in optional fuse failure detection. It can also be

	connected to external condition for fuse failure. This is a blocking condition for the energising function.
SYNx-UB1FF	External fuse failure input from busbar voltage Bus 1 (U5). This signal can come from a tripped fuse switch (MCB) on the secondary side of the voltage transformer. In case of a fuse failure the energising check is blocked.
SYNx-UB1OK	No external voltage fuse failure (U5). Inverted signal.
SYNx-START	The signal initiates the phasing operation. When initiated the function continues until the SYNx-CLOSECB pulse is submitted or it is stopped by the SYNx-BLOCK signal. In test mode SYNx-TESTCB ends the phasing operation.

Output signals	**Description**
SYNx-TESTCB	Output when the function is in test mode. In test mode a complete phasing sequence is performed except for closing of the circuit breaker. The output signal SYNx-TESTCB indicates when the SYNx-CLOSECB signal would have been submitted from the phasing function or when the conditions for paralleling are fulfilled, from the synchro-check function.
SYNx-CLOSECB	Close breaker command from phasing. Used to control the circuit breaker or to be connected to the auto-reclosing function.
SYNx-INPROGR	The signal is high when a phasing operation is in progress, i.e from the moment a SYNx-START is received until the operation is terminated. The operation is teminated when SYNx-CLOSECB or SYNx-TESTCB has been submitted or if a SYNx-BLOCK is received.
SYNx-AUTOOK	Synchrocheck/energising OK. The output signal is high when the synchrocheck conditions set on the HMI are fulfilled. It can also include the energising condition, if selected. The signal can be used to release the autorecloser before closing attempt of the circuit breaker. It can also be used as a free signal.
SYNx-MANOK	Same as above but with alternative settings of the direction for energising to be used during manual closing of the circuit breaker.

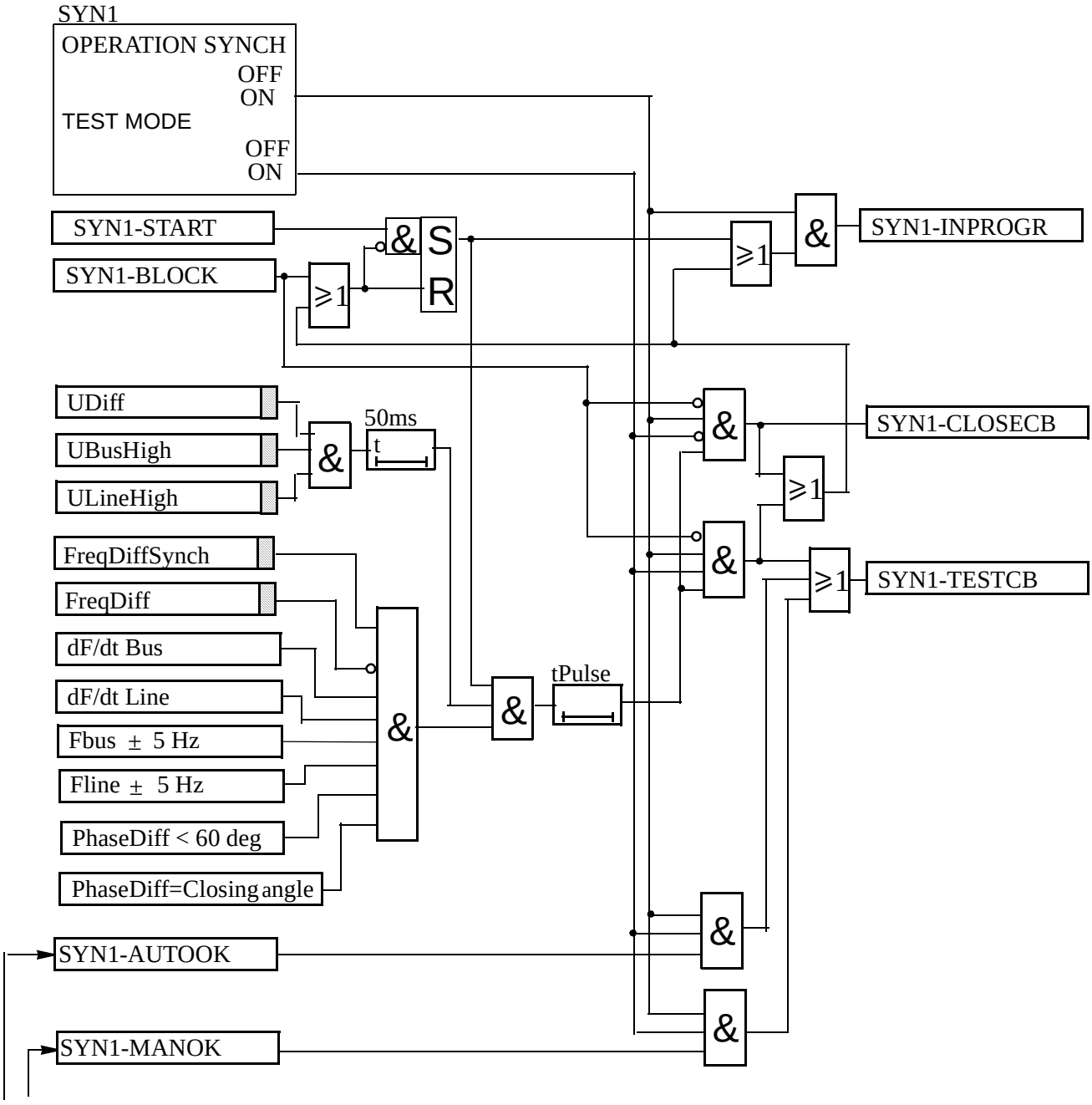

From energising and synchro-check (Figure 8:)

Figure 7: Simplified logic diagram - Phasing

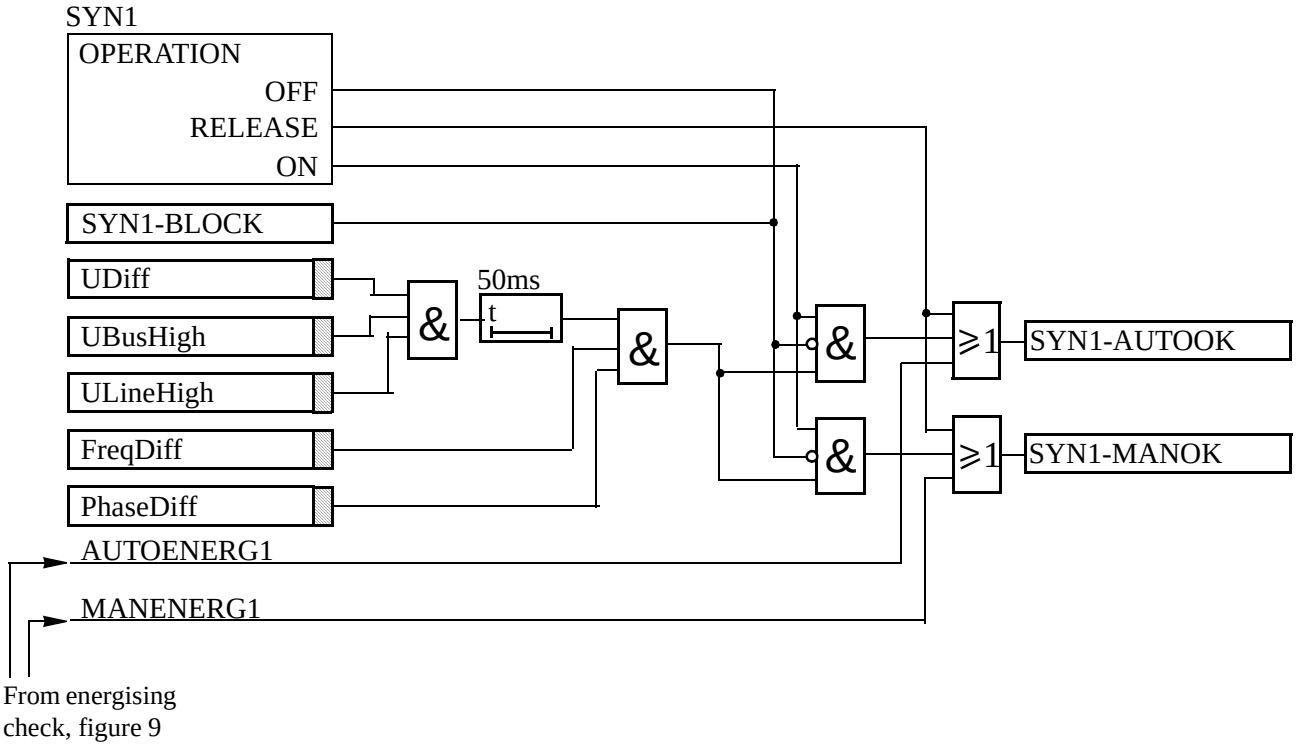

Figure 8: Simplified logic diagram - Synchrocheck

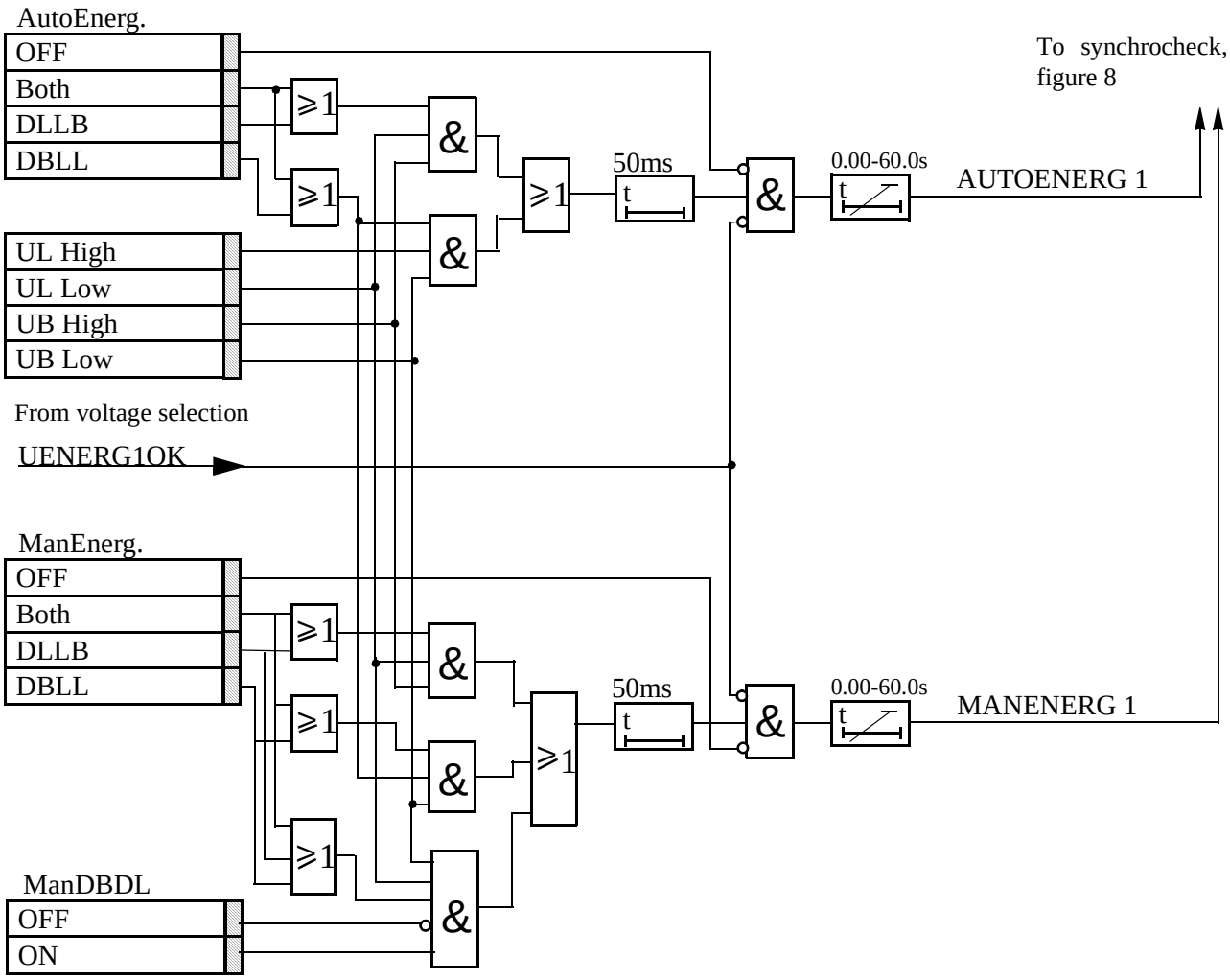

Figure 9: Simplified logic diagram - Energising check.

3 Setting

The setting parameters are accessible through the HMI. The parameters for the synchro-check function are found in the MMI tree under:

Settings
Functions
Group n (n=1-4)
SynchroCheck
SynchroCheck1 (and 2)

3.1 Operation

Off	The function is off and the output is low.
Release	There are fixed, high output signals SYN1-AUTOOK = 1 and SYN1-MANOK = 1.
On	The function is in service and the output signal depends on the input conditions.

3.2 Input phase

The measuring phase of the UL1, UL2, UL3 line voltage, which can be of a single-phase (phase-neutral) or two-phases (phase-phase).

3.3 PhaseShift

This setting is used to compensate for a phase shift caused by a line transformer between the two measurement points for UBus and ULine. The set value is added to the measured phase difference. The bus voltage is reference voltage.

3.4 URatio

The URatio is defined as URatio=UBus/ULine. A typical use of the setting is to compensate for the voltage difference caused if wished to connect the UBus phase-phase and ULine phase-neutral. The “Input phase”-setting should then be set to phase-phase and the “URatio”-setting to sqr3=1.732. This setting scales up the line voltage to equal level with the bus voltage.

3.5 AutoEnerg and ManEnerg

Two different settings can be used for automatic and manual closing of the circuit breaker.

Off	The energising condition is not used only the synchro-check.
DLLB	The line voltage U-line is low, below (10-80% U1b) and the bus voltage U-bus is high, above (70-100% U1b).
DBLL	The bus voltage U-bus is low, below (10-80% U1b) and the line voltage U-line is high, above (70-100% U1b).
Both	Energising can be done in both directions, DLLB or DBLL.

tAutoEnerg	The required consecutive time of fulfilment of the energising condition to achieve SYN1-AUTOOK.
tManEnerg	The required consecutive time of fulfilment of the energising condition to achieve SYN1-MANOK.

3.6 ManDBDL

If the parameter is set to “On”, closing is enabled when Both U-Line and U-bus are below ULow and ManEnerg is set to “DLLB”, “DBLL” or “Both”.

3.7 OperationSynch

Off	The phasing function is off and all outputs are low.
On	The phasing function is in service and the output signals depends on the input conditions.

3.8 ShortPulse

Off	The closing pulse issued to the circuit breaker will be of length=tPulse.
On	The closing pulse issued to the circuit breaker will be of length=one cycle time in the internal logic.

4 Testing

At periodical checks, the functions should preferably be tested with the used settings. To test a specific function, it might be necessary to change some setting parameters, for example:

- AutoEnerg = On/Off/DLLB/DBLL/Both
- ManEnerg = Off
- Operation = Off, On

The tests explained in section “Synchrocheck tests” on page 453“ describe the settings, which can be used as references during testing, are presented before the final settings are specified. After testing, restore the equipment to the normal or desired settings.

4.1 Test equipment

A secondary injection test set with the possibility to alter the phase angle by regulation of the resistive and reactive components is needed. Here, the phase angle meter is also needed. To perform an accurate test of the frequency difference, a frequency generator at one of the input voltages is needed. The tests can also be performed with the computer-aided test system FREJA.

FREJA has a specially designed program for evaluating the synchrocheck function. Figure 10: shows the general test connection principle, which the user can use during testing. This description describes the test of the version intended for one bay.

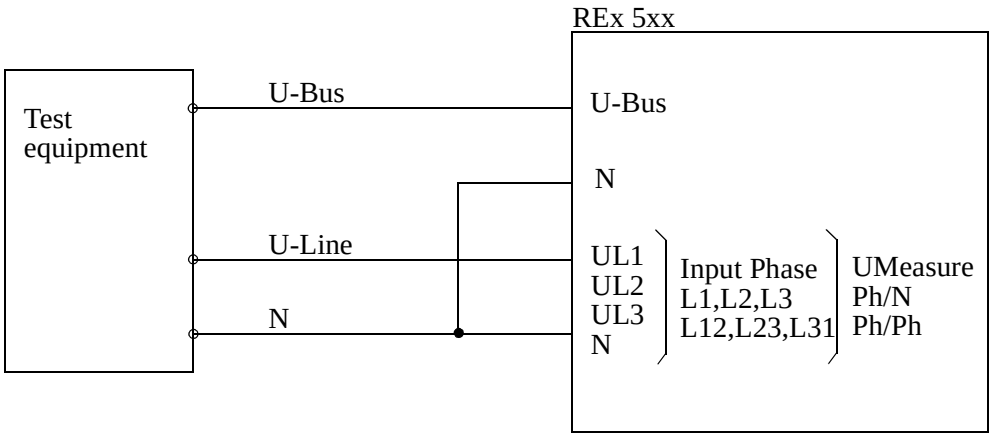

Figure 10: General test connection for synchrocheck with three-phase voltage connected to the line side.

4.2 Phasing tests

These voltage inputs are used:

U-line UL1, UL2 or UL3 voltage input on the terminal.

U-bus U5 voltage input on the terminal

These HMI settings can be used during the test if the final setting is not determined:

1 Set these HMI settings, which are found under:

Settings
Functions
Group n (n=1-4)
SynchroCheck
SynchroCheck1 (and 2)

Table 1: Test settings for phasing

PARAMETER:	SETTING:
Operation	Off
InputPhase	UL1
USelection	SingleBus
PhaseShift	0 deg
URatio	1.00
AutoEnerg	Off
ManEnerg	Off
ManDBDL	Off
UHigh	70% U1b
ULow	40% U1b
FreqDiff	0.05 Hz
PhaseDiff	45°
UDiff	30% U1b
tAutoEnerg	0.5 s
tManEnerg	0.5 s
OperationSynch	On
ShortPulse	Off
FreqDiffSynch	0.40 Hz
tPulse	0.20 s
tBreaker	0.20 s

4.2.1 Test of frequency difference

The frequency difference is set at 0.40 Hz on the HMI, and the test should verify that operation is achieved when the FreqDiffSynch frequency difference is lower than 0.40 Hz.

- Apply voltages U-line (UL1) = 80% U1b, f-line=50.0 Hz and U-Bus (U5) = 80% U1b, f-bus=50.3 Hz.
- Check that a closing pulse is submitted with length=0.20 sec. and at closing angle=360 * 0.20 * 0.40=29 deg.
- Repeat with U-Bus (U5) = 80% U1b, f-bus=50.5 Hz to verify that the function does not operate when freq.diff is above limit.
- Repeat with different settings on tBreaker and FreqDiffSynch. Make sure that the calculated closing angle is less than 60 deg. Verify that closing command is issued at the correct phase angle when the frequency difference is less than the set value.

4.3 Synchrocheck tests

4.3.1 Test of voltage difference

Set the voltage difference at 30% U1b on the HMI, and the test should check that operation is achieved when the voltage difference UDiff is lower than 30% U1b.

These voltage inputs are used:

U-line UL1, UL2 or UL3 voltage input on the terminal.

U-bus U5 voltage input on the terminal

These HMI settings can be used during the test if the final setting is not determined:

1 Set these HMI settings, which are found under:

Settings
Functions
Group n (n=1-4)
SynchroCheck
SynchroCheck1 (and 2)

Table 2: Test settings for voltage difference

Parameter	Setting
Operation	On
InputPhase	UL1
USelection	SingleBus
PhaseShift	0 deg
URatio	1.00
AutoEnerg	Off

Table 2: Test settings for voltage difference

ManEnerg	Off
ManDBDL	Off
UHigh	70% U1b
ULow	40% U1b
FreqDiff	0.05 Hz
PhaseDiff	45°
UDiff	30% U1b
tAutoEnerg	0.5 s
tManEnerg	0.5 s
OperationSynch	Off
ShortPulse	Off
FreqDiffSynch	0.4 Hz
tPulse	0.2 s
tBreaker	0.2 s

2 **Test with UDiff = 0%**
- Apply voltages U-line (UL1) = 80% U1b and U-Bus (U5) = 80% U1b, with no frequency or phase difference.
- Check that the SYN1-AUTOOK and SYN1-MANOK outputs are activated.
- The test can be repeated with different voltage values to verify that the function operates within UDiff <30%.

3 **Test with UDiff = 40%**
- Increase the U-bus (U5) to 120% U1b, and the U-line (UL1) = 80% U1b.
- Check that the two outputs are **NOT** activated.

4 **Test with UDiff = 20%, Uline < UHigh**
- Decrease the U-line (UL1) to 60% U1b and the U-bus (U5) to be equal to 80% U1b.
- Check that the two outputs are **NOT** activated.

5 **Test with URatio=0.20**
- Run the test under section 2 to 4 but with U-bus voltages 5 times lower.

6 **Test with URatio=5.00**
- Run the test under section 2 to 4 but with U-line voltages 5 times lower.

4.3.2 Test of phase difference

The phase difference is set at 45° on the HMI, and the test should verify that operation is achieved when the PhaseDiff (phase difference) is lower than 45°.

1 Set these HMI settings:

Table 3: Test settings for phase difference

Parameter	Setting
Operation	On
InputPhase	UL1
USelection	SingleBus
PhaseShift	0 deg
URatio	1.00
AutoEnerg	Off
ManEnerg	Off
ManDBDL	Off
UHigh	70% U1b
ULow	40% U1b
FreqDiff	0,05 Hz
PhaseDiff	45°
UDiff	15% U1b
tAutoEnerg	0.5 s
tManEnerg	0.5 s
OperationSynch	Off
ShortPulse	Off
FreqDiffSynch	0.4 Hz
tPulse	0.2 s
tBreaker	0.2 s

2 **Test with PhaseDiff = 0°**
Apply voltages U-line (UL1) = 100% U1b and U-bus (U5) = 100% U1b, with no frequency or phase difference.
Check that the SYN1-AUTOOK and SYN1-MANOK outputs are activated.

3 The test can be repeated with other PhaseDiff values to verify that the function operates for values lower than the set ones. By changing the phase angle on U1 connected to U-bus, between +/- 45°. The user can check that the two outputs are activated for a PhaseDiff lower than 45°. It should not operate for other values. See figure 11.

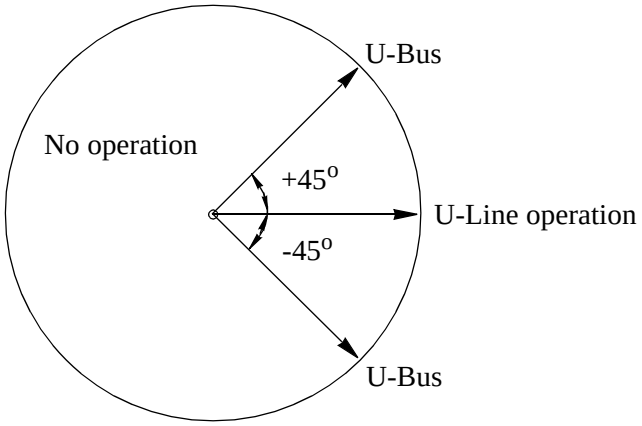

Figure 11: Test of phase difference.

4 Apply a PhaseShift setting of 10 deg. Change the phase angle between +55 and -35 and verify that the two outputs are activated for phase differences between these values but not for phase differences outside. See Figure 12:.

Change the PhaseShift setting to 350 deg. Change the phase angle between +35 and -55 and verify as above.

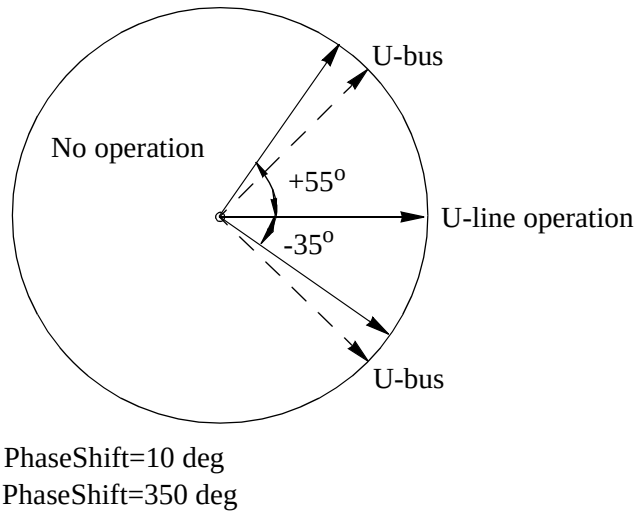

Figure 12: Test of phase difference.

4.3.3 Test of frequency difference

The frequency difference is set at 50 mHz on the HMI, and the test should verify that operation is achieved when the FreqDiff frequency difference is lower than 50 mHz.

1 Use the same HMI setting as in section “Test of phase difference” on page 454.

2 **Test with FreqDiff = 0 mHz**
Apply voltages U-Line (UL1) equal to 100% U1b and U-Bus (U5) equal to 100% U1b, with a frequency difference equal to 0 mHz and a phase difference lower than 45°. Check that the SYN1-AUTOOK and SYN1-MANOK outputs are activated.

3 **Test with FreqDiff = 1Hz**
Apply voltage to the U-line (UL1) equal to 100% U1b with a frequency equal to 50 Hz and voltage U-bus (U5) equal to 100% U1b, with a frequency equal to 49 Hz.
Check that the two outputs are **NOT** activated.

4 The test can be repeated with different frequency values to verify that the function operates for values lower than the set ones. If the FREJA program, *Test of synchronising relay*, is used the frequency can be changed continuously.

Note! A frequency difference also implies a floating mutual-phase difference. So the SYN1-AUTOOK and SYN1-MANOK outputs might NOT be stable, even though the frequency difference is within set limits, because the phase difference is not stable!

4.3.4 Test of reference voltage

1 Use the same basic test connection as in Figure 10:. The UDiff between the voltage connected to U-bus and U-line should be 0%, so that the SYN1-AUTOOK and SYN1-MANOK outputs are activated first.
Change the U-Line voltage connection to UL2 without changing the setting on the HMI.
Check that the two outputs are **NOT** activated.

2 The test can also be repeated by moving the U-line to the UL3 input.

4.4 Test of energising check

Use these voltage inputs:

U-line = UL1, UL2 or UL3 voltage input on the terminal.

U-bus = U5 voltage input on the terminal.

4.4.1 Test of dead line live bus (DLLB)

The test should verify that the energising function operates for a low voltage on the U-Line and for a high voltage on the U-bus. This corresponds to an energising of a dead line to a live bus.

Use these HMI settings during the test if the final setting is not determined.

1 Set these HMI settings:

Table 4: Test settings for DLLB

Parameter	Setting
Operation	On
InputPhase	UL1
USelection	SingleBus
PhaseShift	0 deg
URatio	1.00
AutoEnerg	DLLB
ManEnerg	DLLB
ManDBDL	Off
UHigh	80% U1b
ULow	40% U1b
FreqDiff	0,05 Hz
PhaseDiff	45°
UDiff	15% U1b
tAutoEnerg	0.5 s
tManEnerg	0.5 s
OperationSynch	Off
ShortPulse	Off
FreqDiffSynch	0.4 Hz
tPulse	0.2 s
tBreaker	0.2 s

2 Apply a single-phase voltage 100% U1b to the U-bus (U5), and a single-phase voltage 30% U1b to the U-line (UL1).

3 Check that the SYN1-AUTOOK and SYN1-MANOK outputs are activated.

4 Increase the U-Line (UL1) to 60% U1b and U-Bus(U5) to be equal to 100% U1b. The outputs should **NOT** be activated.

5 The test can be repeated with different values on the U-Bus and the U-Line.

4.4.2 Dead bus live line (DBLL)

The test should verify that the energising function operates for a low voltage on the U-bus and for a high one on the U-line. This corresponds to an energising of a dead bus from a live line.

1 Change the HMI settings AutoEnerg and ManEnerg to DBLL**.**

2 Apply a single-phase voltage of 30% U1b to the U-bus (U5) and a single-phase voltage of 100% U1b to the U-line (UL1).

3 Check that the SYN1-AUTOOK and SYN1-MANOK outputs are activated.

4 Decrease the U-line to 60% U1b and keep the U-bus equal to 30% U1b.
The outputs should **NOT** be activated.

5 The test can be repeated with different values on the U-bus and the U-line.

4.4.3 Energising in both directions (DLLB or DBLL)

1 Change the HMI settings AutoEnerg and ManEnerg to Both.

2 Apply a single-phase voltage of 30% U1b to the U-line (UL1) and a single-phase voltage of 100% U1b to the U-bus (U5).

3 Check that the “SYN1-AUTOOK” and “SYN1-MANOK” outputs are activated.

4 Change the connection so that the U-line (UL1) is equal to100% U1b and the U-bus (U5) is equal to 30% U1b.

5 The outputs should still be activated.

6 The test can be repeated with different values on the U-bus and the U-line.

7 Restore the equipment to normal or desired settings.

4.4.4 Dead bus Dead line (DBDL)

The test should verify that the energising function operates for a low voltage on both the U-bus the U-line, i.e closing of the breaker in a non energised system.

1 Set AutoEnerg to Off and ManEnerg to DBLL.

Set ManDBDL to On.

2 Apply a single-phase voltage of 30% U1b to the U-bus (U5) and a single-phase voltage of 30% U1b to the U-line (UL1).

3 Check that the SYN1-MANOK output is activated.

4 Increase the U-bus to 80% U1b and keep the U-line equal to 30% U1b.

The outputs should **NOT** be activated.

5 Repeat the test with ManEnerg set to DLLB and Both, and different values on the U-bus and the U-line.

5 Appendix

5.1 Function block

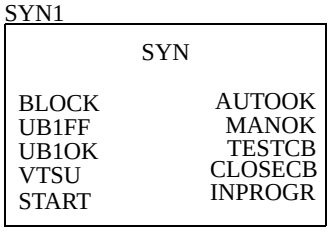

5.2 Signal list

Block	Signal	Type	Description
SYNx-	BLOCK	IN	Block of synchro- and energising check function x (x=1-2)
SYNx-	UB1FF	IN	External voltage fuse failure, bus 1
SYNx-	UB1OK	IN	External voltage fuse healthy, bus 1
SYNx-	VTSU	IN	Block from internal fuse failure supervision or from external fuse failure of the line voltage.
SYNx-	START	IN	Initiation of phasing operation
SYNx-	AUTOOK	OUT	Automatic synchro-/energising check OK
SYNx-	MANOK	OUT	Manual synchronism/energising check OK
SYNx-	TESTCB	OUT	Output from phasing and synchrocheck when SYNx is in test mode
SYNx-	CLOSECB	OUT	Close circuit breaker pulse from phasing
SYNx-	INPROGR	OUT	Phasing operation in progress

5.3 Setting table

Parameter	Range	Unit	Default	Parameter description
Operation	Off, Release, On		Off	Synchrocheck function Off/Release/On
InputPhase	L1, L2, L3, L1-L2, L2-L3, L3-L1		L1	Select input voltage
PhaseShift	0-360	degrees	0	Phase shift between U-bus and U-line
URatio	0.20-5.00		1.00	Voltage ratio between U-bus and U-line
AutoEnerg	Off, DLLB, DBLL, Both		Off	Auto energising/synchronising method
ManEnerg	Off, DLLB, DBLL, Both		Off	Manual energising/synchronising method
ManDBDL	Off, On		Off	Manual dead-bus and dead-line energising
UHigh	50-120	%	80	High voltage limit, as a percentage of Ub
ULow	10-100	%	40	Low voltage limit, as a percentage of Ub
FreqDiff	0.05-0.30	Hz	0.20	Frequency difference limit
PhaseDiff	5-75	degrees	20	Phase difference limit
UDiff	5-50	%	20	Voltage difference limit, as a percentage of Ub
tAutoEnerg	0.000-60.000	s	0.100	Auto energising time delay period
tManEnerg	0.000-60.000	s	0.100	Manual energising time delay period
Operation-Synch	Off, On		Off	Phasing function Off/On
ShortPulse	Off, On		Off	Short pulse Off/On
FreqDiff-Synch	0.05-0.50	Hz	00.30	Frequency diff limit for phasing
tPulse	0.000-60.000	s	0.200	Breaker closing pulse duration
tBreaker	0.02-0.50	s	0.20	Closing time of the breaker

1 Application

Automatic reclosing (AR) is a well-established method to restore the service of a power line after a transient line fault. The majority of line faults are flashover arcs, which are transient by nature. When the power line is switched off by operation of line protection and line breakers, the arc de-ionises and recovers voltage withstand at a somewhat variable rate. So a certain line *dead time* is needed. But then line service can resume by the auto-reclosing of the line breakers. Select the length of the dead time to enable good probability of fault arc de-ionisation and successful reclosing.

For the individual line breakers and auto-reclosing equipment, the Auto-reclose open time (AR open time) expression is used.
At simultaneous tripping and reclosing at the two line ends, Auto-reclose open time equals the dead time of the line. Otherwise these two times may differ.

In case of a permanent fault, the line protection trips again at reclosing to clear the fault. Figure 1: shows the operation sequence and some expressions.

The reclosing function can be selected to perform single-phase, two-phase and/or three-phase reclosing from six single-shot to multiple-shot reclosing programs. The three-phase auto-reclose open time can be set to give either high-speed auto-reclosing (HSAR) or delayed auto-reclosing (DAR).

Three-phase auto-reclosing can be performed with or without the use of synchro-check and energising check.

Single-phase tripping and single-phase reclosing is a way to limit the effect of a single-phase line fault to system operation. Especially at the higher voltages, the majority of line faults are of the single-phase type. The method is of particular value to maintain system stability in systems with limited meshing or parallel routing. It requires individual operation of each phase of the breakers, which is most common at the higher transmission voltages.

A somewhat longer dead time may be required at single-phase reclosing compared to high-speed three-phase reclosing, due to influence on the fault arc of the non-tripped phases.

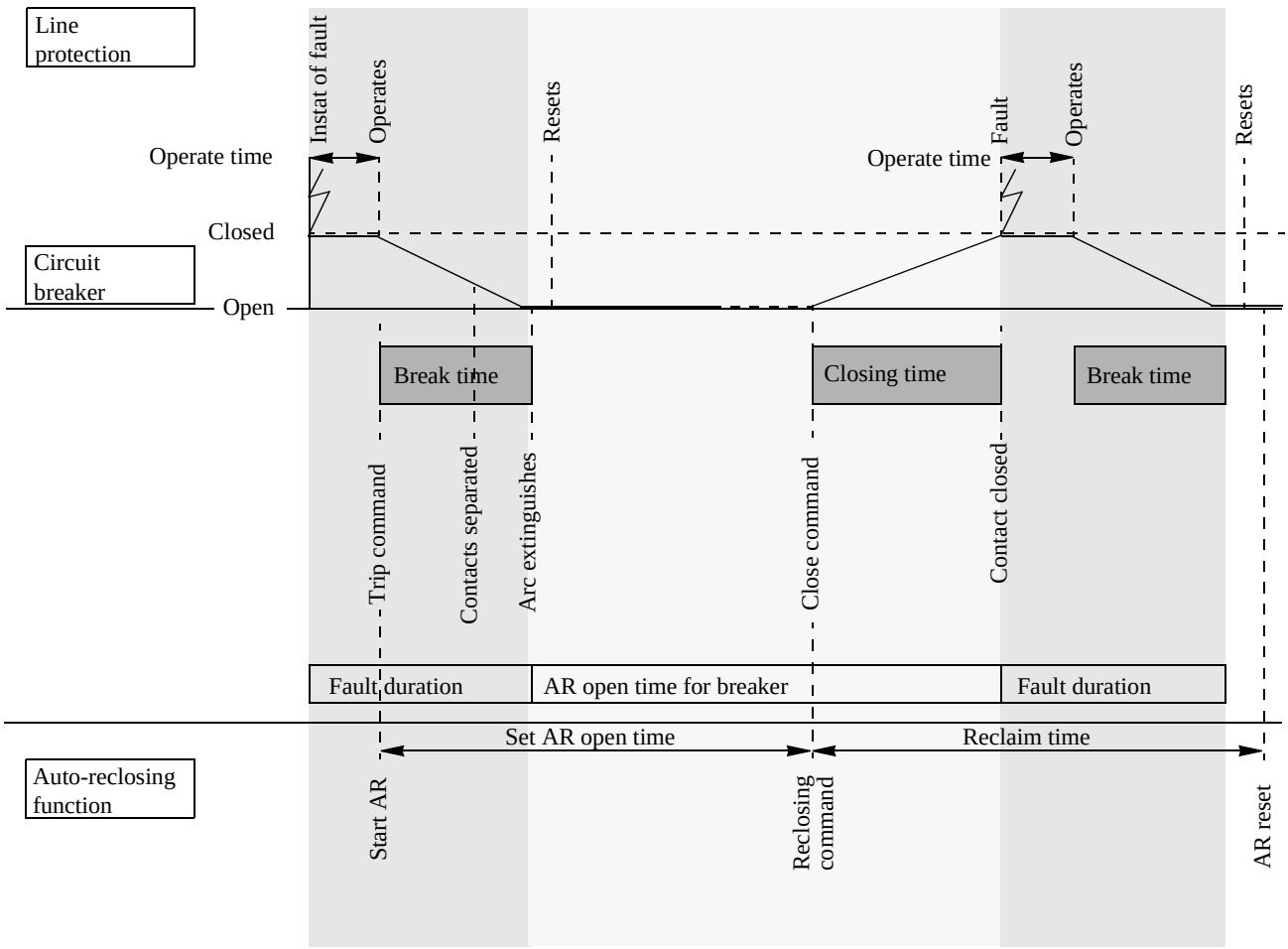

Figure 1: Single-shot auto-reclosing at a permanent fault.

2 Theory of operation

The auto-reclosing function first co-operates with the line protection functions, the trip function, the circuit-breaker and the synchro-check function. It can also be influenced by other protection functions such as shunt reactor protection through binary input signals and AR On/Off manual control. It can provide information to the disturbance and service report functions, event recording, indications, and reclosing operation counters.

The reclosing function outputs and counters can be viewed and reset on the local HMI at:

ServiceReport
Functions
AutoRecloser
AutoRecloser n

The auto-reclosing is a pure logical function that works with logical or binary signals, logical operations and timers.

2.1 Input and output signals, single breaker arrangement

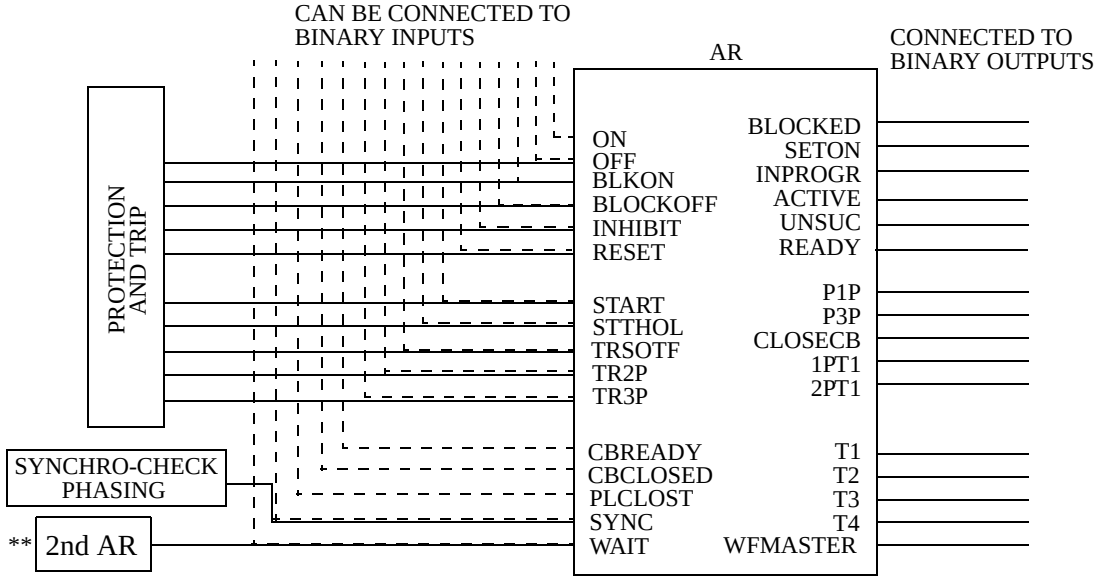

** ONLY IN SOME TERMINALS

Figure 2: Single-, two- and three-phase auto-reclosing; input and output signals.

The input signals can be connected to binary inputs or internal functions of the terminal. The output signals can be connected to binary output relays. It is also possible to connect the signals to free logic functions, for example OR-gates, and in that way add connection links.

The input and output signals which can be interfaced with the auto-recloser 1 are presented in this document. Data is the same for other auto-recloser functions (2 to 6) with signal prefix AR02- to AR06-.

Input signals:

AR01-ON	Switches the auto-reclosing On (at Operation = Stand-by).
AR01-OFF	Switches the auto-reclosing Off (at Operation =Stand-by).
AR01-BLKON	Sets the auto-recloser in blocked state.
AR01-BLOCKOFF	Releases the auto-recloser from the blocked state.
AR01-INHIBIT	Inhibits an auto-reclosing cycle. Interrupts and blocks auto-reclosing. The input can, for example, be activated by a shunt reactor, delayed back-up protection or breaker-failure protection. There is a tInhibit reset timer to ensure blocking during a few seconds after the signal is removed.
AR01-RESET	Resets the auto-recloser.
AR01-START	Auto-reclosing start by a protection trip signal. It also makes the reclosing program continue at a repeated trip, if multi-shot reclosing is selected.
AR01-STTHOL	Start of thermal overload protection. Will block the auto-reclosing.
AR01-TRSOTF	Protection trip switch-onto-fault. This signal alone does not start reclosing. But at a reclosing onto a permanent fault it may appear and let the function move on to AR01-UNSUC (unsuccessful) or second-shot reclosing as programmed.
AR01-TR2P	Two-phase trip. Status signal to the auto-reclosing function that a two-phase tripping occurred.
AR01-TR3P	Three-phase trip. Status signal to the auto-reclosing function that a three-phase tripping occurred.
AR01-CBREADY	A condition for the start of a reclosing cycle. The circuit breaker must have its operating gear ready (manoeuvre spring charged) for a Close-Open (CO) or an Open-Close-Open (OCO) operations to allow the start of an auto-reclosing cycle. This input can also be connected to circuits that monitor the breaker pressure. If it is not ready at start, it is unlikely that it is ready by the end of the AR open time.
AR01-CBCLOSED	Circuit breaker closed. A condition for the start of a reclosing cycle. The circuit breaker (CB) must be closed at least for five seconds to allow a new AR cycle to start. It prevents start at closing onto a fault. It also prevents the reclosing of a breaker that is open at the protection trip, which is possible in a multiple breaker arrangement.

AR01-PLCLOST	Power line carrier or other form of permissive signal lost. An optional input signal at loss of a communication channel in a permissive line protection scheme. Can extend the AR open time.
AR01-SYNC	Synchro-check fulfilled from the internal synchro-check/phasing function or an external device required for three-phase auto-reclosing.

Output signals:

AR01-BLOCKED	The auto-recloser is in blocked state.
AR01-SETON	Indicates that the AR operation is switched on, operative.
AR01-INPROGR	Auto-reclosing attempt in progress. Activated during the AR open time.
AR01-ACTIVE	Auto-reclosing cycle in progress.
AR01-UNSUC	Auto-reclosing unsuccessful. Activated at a new trip after the last programmed shot (selected number of reclosing shots), or at trip while reclosing is blocked. The output resets after the reclaim time.
AR01-READY	Indicates that the AR function is ready for a new AR cycle. It is On but not started or blocked. This output is high when the function is On, at rest, and prepared for operation. The signal can be used by a protection function to extend the reach before reclosing, when required.
AR01-P1P	Permit single-phase trip. Inverse signal to AR01-P3P.
AR01-P3P	Prepare three-phase trip. Control of the next trip operation.
AR01-CLOSECB	Close circuit-breaker command.
AR01-1PT1	Single-phase reclosing in progress.
AR01-2PT1	Two-phase reclosing in progress.
AR01-T1(T2 - T4)	Three-phase reclosing, Shot 1(2 - 4) in progress.

2.2 Multi-breaker arrangement

In stations with a 1 1/2-breaker, double breaker or ring bus arrangement, there are two breakers which switch that end of the line. The reclosing of the line breakers can be made in a sequential order. One breaker is reclosed first, and if the reclosing is successful, the second breaker is reclosed as well. In the case of a permanent fault, the second breaker need not to be reclosed. By fitting one REx 5xx terminal for each line breaker, and by a few interconnections between them, sequential reclosing can be achieved. See Figure 3:.

One terminal is selected as *Master* and given *high* reclosing *priority.* At line protection trip, the two reclosing functions are started, but the master issues a *Wait For Master* signal to the *Slave* (with *low* reclosing *priority*). At unsuccessful reclosing by the master, an *Inhibit* reclosing signal is sent to the slave terminal to interrupt and reset the reclosing function.

AR01-WAIT Signal to the low priority auto-reclosing function from the master in multi-breaker arrangements for sequential reclosing.

AR01-WFMASTER Wait for master. Issued by the high priority unit for sequential reclosing.

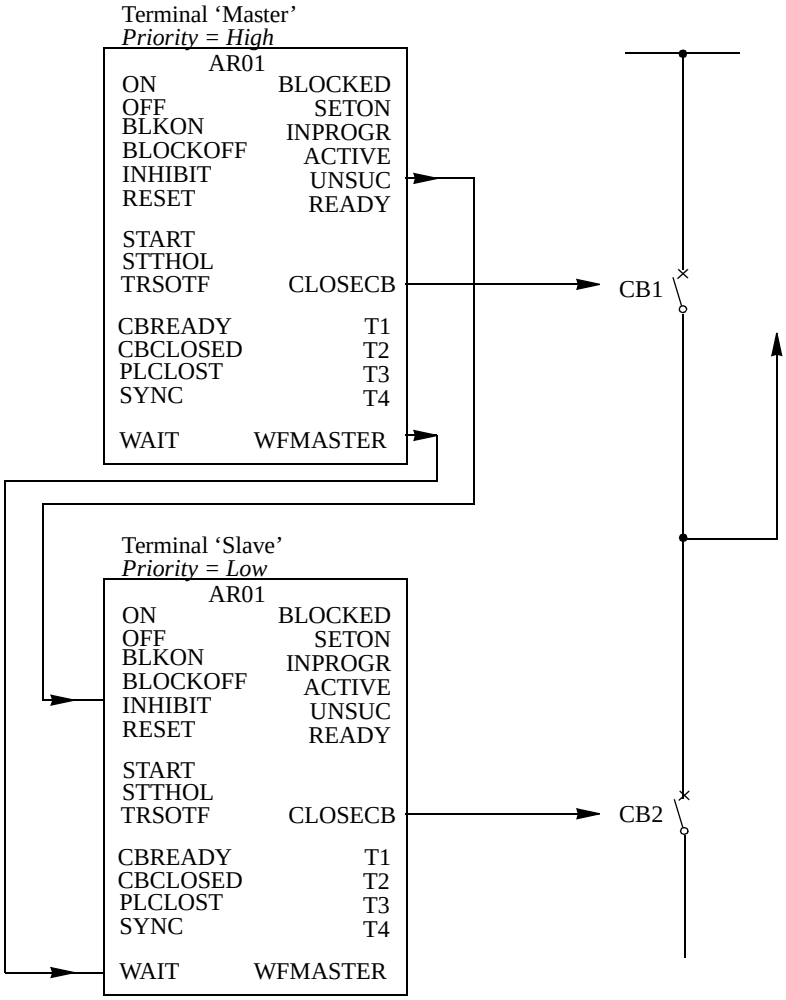

*) Other input/output signals as in previous single breaker arrangement.

Figure 3: Additional input and output signals at multi-breaker arrangement.

2.3 AR Operation

The user can control the auto-reclosing function from the local HMI. Use the parameter *Operation*, which can be set to Off, Stand-by or On. See Figure 6:.

Off deactivates the auto-recloser. *On* activates automatic reclosing. Stand-by enables On and Off Operation via input signal pulses.

3 Design

3.1 Start and control of the auto-reclosing

The automatic operation of the auto-reclosing function is controlled by the parameter *Operation* and the input signals as described above. When it is on, the AR01-SETON output is high (active). See Figure 6:.

The auto-reclosing function is activated at a protection trip by the AR01-START input signal. At repeated trips, this signal is activated again to make the reclosing program continue.

There are a number of conditions for the start to be accepted and a new cycle started. After these checks, the start signal is latched in and the *Started* state signal is activated. It can be interrupted by certain events.

3.2 Extended AR open time, shot 1

The purpose of this function is to adapt the length of the AR Open time to the possibility of non-simultaneous tripping at the two line ends. If a permissive communication scheme is used and the permissive communication channel (for example, PLC, power-line carrier) is out of service at the fault, there is a risk of sequential non-simultaneous tripping. To ensure a sufficient line dead time, the AR open time is extended by 0.4 s. The input signal AR01-PLCLOST is checked at tripping. See figure 7. Select this function (or not) by setting the Extended t1 parameter to On (or Off).

3.3 Long trip signal

During normal circumstances, the trip command resets quickly due to fault clearing. The user can set a maximum trip pulse duration by tTrip. At a longer trip signal, the AR open dead time is extended by Extend_t1. If the Extended t1 = Off, a long trip signal interrupts the reclosing sequence in the same way as AR01-INHIBIT.

3.4 Reclosing programs

The reclosing programs can be performed with up to maximum four reclosing attempts (shots), selectable with the NoOfReclosing parameter. The first program is used at pure 3-phase trips of breakers and the other programs are used at 1-, 2- or 3-phase trips of breakers.

The following reclosing programs can be selected through the parameter *FirstShot*, to fit actual application:

3ph 3-phase reclosing, one to four attempts.

1/2/3ph 1-phase, 2-phase or 3-phase reclosing (shot 1) followed by 3-phase reclosing (shot 2 - 4) if selected.

1/2ph 1-phase or 2-phase reclosing (shot 1) followed by 3-phase reclosing (shot 2 - 4) if selected. If the first trip is a 3-phase trip (TR3P high), the AR will be blocked.

1ph + 1*2ph 1-phase or 2-phase reclosing (shot 1). The 1-phase reclosing attempt can be followed by 3-phase reclosing (shot 2 - 4) if selected. A failure of a 2-phase reclosing attempt will block the AR. If the first trip is a 3-phase trip (TR3P high), the AR will be blocked.

1/2ph + 1*3ph 1-phase, 2-phase or 3-phase reclosing (shot 1). The 1-phase and 2-phase reclosing attempts can be followed by 3-phase reclosing (shot 2 - 4) if selected. A failure of a 3-phase reclosing attempt (at shot 1) will block the AR.

1ph + 1*2/3ph 1-phase, 2-phase or 3-phase reclosing (shot 1). The 1-phase reclosing attempt can be followed by 3-phase reclosing (shot 2 - 4) if selected. A failure of the 2-phase and 3-phase reclosing attempts will block the AR.

Below is a description of a *one-shot reclosing for single-phase, two-phase or three-phase.* The other programs are thereafter described more briefly.

3.4.1 1/2/3ph reclosing

For the example, one-shot reclosing for 1-phase, 2-phase or 3-phase, see Figures 6 and 12. Here, the AR function is assumed to be On and Ready. The breaker is closed and the operation gear ready (manoeuvre spring charged etc.). Only the 1-phase and 3-phase cases are described.

AR01-START is received and sealed-in at operation of the line protection. The AR01-READY output is reset (Ready for a new AR cycle).

If AR01-TR2P (2-phase trip) is low and AR01-TR3P (3-phase trip) is...

low, the timer for 1-phase reclosing open time t1 1Ph is started and the AR01-1PT1 output (auto-reclosing 1-phase, shot 1, in progress) is activated.
It can be used to suppress Pole disagreement and Earth-fault protection during the 1-phase open interval.

high, the timer for 3-phase AR open time, t1, is started (instead of t1 1Ph) and AR01-T1 is set (auto-reclosing 3-phase, shot 1, in progress). While either t1 1Ph or t1 is running, the output AR01-INPROGR is activated.

Immediately after the start-up of the reclosing and tripping of the breaker, the input (in Figure 6:) AR01-CBCLOSED is low (possibly also AR01-CBREADY at type OCO). The AR Open-time timer, t1 1Ph or t1, keeps on running.
At the end of the set AR open time, t1 1Ph or t1, the respective SPTO or TPTO (single-phase or three-phase AR time-out, Figure 9:) is activated and goes on to the output module for further checks and to give a closing command to the circuit breaker.

3.5 Evolving fault

A single-phase fault can result in a single-phase trip and start of t1 1Ph. The fault may evolve into another phase. At such an evolving fault, the protection must issue a three-phase trip at the second trip.

When the AR01-P3P appears, the t1 1Ph-timer is stopped and the timer for t1, the three-phase AR open time, starts.

3.6 AR01-P3P, Prepare three-phase trip

This output signal ensures that a possible coming trip operation is a three-phase operation. This is, for example, the case if the AR is set off, or blocked, or if it has performed the first reclosing shot.

Usually, the signal is reset when the reclaim time after a reclosing has expired and the function is once more ready for a single-phase reclosing,
Permit single-phase trip (P1P). It is the inverse of P3P and should be connected to a binary output relay. Should the unit with the auto-reclosing be inoperative, single-phase trip is thus not released. The external circuit can be connected to a make or break contact of an output relay depending on what is required: Permit single-phase or Prepare three-phase trip.

3.7 Blocking of a new reclosing cycle

A new start of a reclosing cycle is blocked for the reclaim time after the selected number of reclosing attempts are performed.

3.8 Reclosing checks and Reclaim timer

An AR open-time time-out signal is received from a program module.
At three-phase reclosing, a synchro-check and/or energising check or voltage check can be used. It is possible to use an internal or an external synchro-check function, configured to AR01-SYNC.
If a reclosing without check is preferred, configure the input AR01-SYNC to FIXD-ON (set to 1).

Another possibility is to set the output from the internal synchro-check function to a permanently active signal. Set Operation = Release in the synchro-check function. Then AR01-SYNC is configured to SYNx-AUTOOK.

At confirmation from the synchro-check or if the reclosing is of single-phase type, the signal passes on.

At AR01-CBREADY signal of the Close-Open (CO) type, it is checked that this signal is present to allow a reclosing.

The synchronising and energising check must be fulfilled within a certain period of time, tSync. If it does not, or if the other conditions are not fulfilled, the reclosing is interrupted and blocked.

The Reclaim-timer defines a period from the issue of a reclosing command, after which the reclosing function is reset. Should a new trip occur within this time, it is treated as a continuation of the first fault.
When a closing command is given (Pulse AR), the reclaim timer is started.

There is an AR State Control, Figure 9:, to track the actual state in the reclosing sequence.

3.9 Pulsing of CB closing command

The circuit breaker closing command, AR01-CLOSECB, is made as a pulse with a duration, set by the tPulse parameter. For circuit breakers without an anti-pumping function, the closing-pulse-cutting described below can be used. It is selected by means of the CutPulse parameter (set to On). In case of a new trip pulse, the closing pulse will be cut (interrupted). But the minimum length of the closing pulse is always 50 ms.

At the issue of a reclosing command, the associated reclosing operation counter is also incremented.
There is a counter for each type of reclosing and one for the total number of reclosings. See Figure 10:.

3.10 Transient fault

After the reclosing command, the reclaim timer keeps running for the set time. If no tripping occurs within this time, tReclaim, the auto-reclosing function will be reset. The circuit breaker remains closed and the operating gear ready (manoeuvre spring is recharged). AR01-CBCLOSED = 1 and AR01-CBREADY = 1.

After the reclaim time, the AR state control resets to original rest state, with AR01-SETON = 1, AR01-READY = 1 and AR01-P1P = 1 (depending on the selected program). The other AR01 outputs = 0.

3.11 Unsuccessful signal

Normally the signal AR01-UNSUC appears when a new start is received after the last reclosing attempt has been made. See Figure 11:. It can be programmed to appear at any stage of a reclosing sequence by setting the parameter *UnsucMode* = On. The UNSUC signal is attained after the time tUnsuc.

3.12 Permanent fault

If a new trip takes place after a reclosing attempt and a new AR01-START or AR01-TRSOTF signal appears, the AR01-UNSUC (Reclosing unsuccessful) is activated. The timers for the first reclosing attempt (t1 1Ph, t1 2Ph and t1) cannot be started (Figure 9:).

Depending on the PulseCut parameter setting, the closing command may be shortened at the second trip command.

After time-out of the reclaim timer, the auto reclosing function resets, but the circuit breaker remains open (AR01-CBCLOSED = 0, AR01-CBREADY = 1). Thus the reclosing function is not ready for a new reclosing cycle. See Figure 6: and Figure 12:.

3.13 Automatic confirmation of programmed reclosing attempts

The auto-recloser can be programmed to continue with reclosing attempts two to four (if selected) even if the start signals are not received from the protection functions, but the breaker is still not closed. See figure 8. This is done by setting the parameter *AutoCont* = On and the wait time *tAutoWait* to desired length.

3.14 More about reclosing programs

The reclosing programs are briefly described below concerning type of reclosing and number of attempts for different trips. Also see Table 1 in the end of this section.

3ph
3-phase reclosing, one to four attempts (NoOfReclosing parameter).
The output AR01-P3P is always high (=1).

A trip operation is made as a three-phase trip at all types of fault.
The reclosing is as a three-phase reclosing in program **1/2/3ph**, described above.

All signals, blockings, inhibits, timers, requirements etc. are the same as for the above described example.

1/2/3ph
1-phase, 2-phase or 3-phase reclosing in the first shot.

At any kind of trip, the operation is as already described, program **1/2/3ph**. If the first reclosing attempt fails, a 3-phase trip will be issued and 3-phase reclosings can follow, if selected. Maximum three additional attempts can be done (according to the NoOfReclosing parameter).

All signals, blockings, inhibits, timers, requirements etc. are the same as for the above described example.

1/2ph
1-phase or 2-phase reclosing in the first shot.

At 1-phase or 2-phase trip, the operation is as in above described example, program **1/2/3ph**. If the first reclosing attempt fails, a 3-phase trip will be issued and 3-phase reclosings can follow, if selected. Maximum three additional attempts can be done (according to the NoOfReclosing parameter).

At 3-phase trip, TR2P low and TR3P high, the AR will be blocked and no reclosing takes place.

All signals, blockings, inhibits, timers, requirements etc. are the same as for the above described example.

1ph + 1*2ph
1-phase or 2-phase reclosing in the first shot.

At 1-phase trip (TR2P low and TR3P low), the operation is as in above

described example, program **1/2/3ph**. If the first reclosing attempt fails, a 3-phase trip will be issued and 3-phase reclosings can follow, if selected. Maximum three additional attempts can be done (according to the NoOf-Reclosing parameter).

At 2-phase trip (TR2P high and TR3P low), the operation is similar as above. But, if the first reclosing attempt fails, a 3-phase trip will be issued and the AR will be blocked. No more attempts take place!

At 3-phase trip, TR2P low and TR3P high, the AR will be blocked and no reclosing takes place.

All signals, blockings, inhibits, timers, requirements etc. are the same as for the above described example.

1/2ph + 1*3ph
1-phase, 2-phase or 3-phase reclosing in the first shot.

At 1-phase or 2-phase trip, the operation is as described above. If the first reclosing attempt fails, a 3-phase trip will be issued and 3-phase reclosings can follow, if selected. Maximum three additional attempts can be done (according to the NoOfReclosing parameter).

At 3-phase trip, the operation is similar as above. But, if the first reclosing attempt fails, a 3-phase trip will be issued and the AR will be blocked. No more attempts take place!

All signals, blockings, inhibits, timers, requirements etc. are the same as for the above described example.

1ph + 1*2/3ph
1-phase, 2-phase or 3-phase reclosing in the first shot.

At 1-phase trip, the operation is as described above. If the first reclosing attempt fails, a 3-phase trip will be issued and 3-phase reclosings can follow, if selected. Maximum three additional attempts can be done (according to the NoOfReclosing parameter).

At 2-phase or 3-phase trip, the operation is similar as above. But, if the first reclosing attempt fails, a 3-phase trip will be issued and the AR will be blocked. No more attempts take place!

All signals, blockings, inhibits, timers, requirements etc. are the same as for the above described example.

Table 1: Type of reclosing for different programs

Program	1st attempt	2-4th attempt
3ph	3ph	3ph
1/2/3ph	1ph	3ph
	2ph	3ph
	3ph	3ph
1/2ph	1ph	3ph
	2ph	3ph
	No 3ph reclosing	No 3ph reclosing
1ph + 1*2ph	1ph	3ph
	2ph	No
	No 3ph reclosing	No 3ph reclosing
1/2ph + 1*3ph	1ph	3ph
	2ph	3ph
	3ph	No
1ph + 1*2/3ph	1ph	3ph
	2ph	No
	3ph	No

4 Configuration and setting

The signals are configured in the CAP 531 configuration tool.

The parameters for the auto-reclosing function are set through the local HMI at:

Settings
Functions
Group n
AutoRecloser
AutoRecloser n

4.1 Recommendations for input signals

See Figure 4: and the default configuration for examples.

AR01-ON and AR01-OFF
may be connected to binary inputs for external control.

AR01-START
should be connected to the protection function trip output which shall start the auto-recloser. It can also be connected to a binary input for start from an external contact. A logical OR gate can be used to multiply the number of start sources.

AR01-INHIBIT
can be connected to binary inputs, to block the AR from a certain protection, such as a line connected shunt reactor, transfer trip receive or back-up protection or breaker-failure protection.

AR01-CBCLOSED and **AR01-CBREADY**
must be connected to binary inputs, for pick-up of the breaker signals. If the external signals are of Breaker-not-ready type, uncharged etc., an inverter can be configured before CBREADY.

AR01-SYNC
is connected to the internal synchro-check function if required. It can also be connected to a binary input. If neither internal nor external synchronising or energising check (dead line check) is required, it can be connected to a permanent 1 (high), by connection to FIXD-ON.

AR01-PLCLOST
can be connected to a binary input, when required.

AR01-TRSOTF
can be connected to the internal line protection, distance protection, trip switch-onto-fault.

AR01-STTHOL
Start of thermal overload protection signal. Can be connected to OVLD-TRIP to block the AR at overload.

AR01-TR2P and AR01-TR3P
are connected to the function block TRIP or to binary inputs. The protection functions that give two-phase or three-phase trips are supposed to be routed via that function.

Other
The other input signals can be connected as required.

4.2 Recommendations for output signals

See Figure 4: and the default configuration for examples.

AR01-READY
can be connected to the Zone extension of a line protection. It can also be used for indication, if required.

AR01-1PT1 and 2PT1
1-phase and 2-phase reclosing in progress is used to temporarily block an Earth-fault protection and/or a Pole disagreement function during the 1-phase or 2-phase open intervals.

AR01-CLOSECB
connect to a binary output relay for circuit breaker closing command.

AR01-P3P
prepare 3-phase trip: Connect to TRIP-P3PTR.

AR01-P1P
permit 1-phase trip: Can be connected to a binary output for connection to external protection or trip relays. In case of total loss of auxiliary voltage, the output relay drops and does not allow 1-phase trip. If needed to invert the signal, it can be made by a breaking contact of the output relay.

Other
The other output signals can be connected for indication, disturbance recording etc., as required.

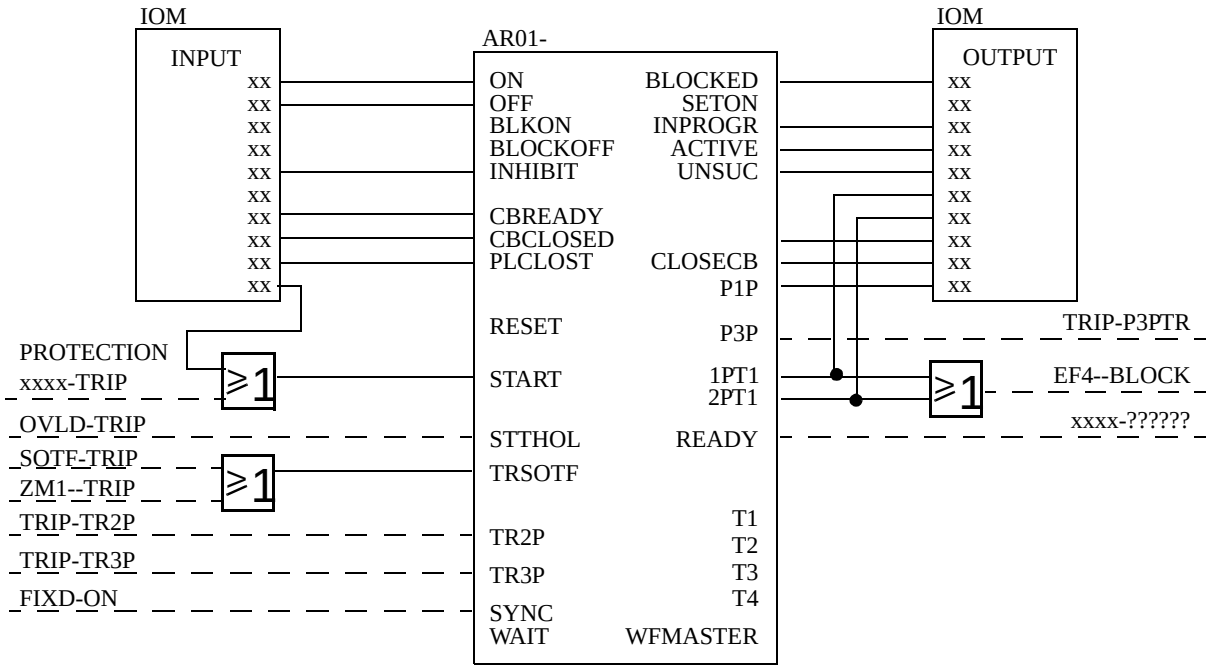

Figure 4: Recommendations for I/O-signal connections.

4.3 Recommendations for multi-breaker arrangement

Sequential reclosing at multi-breaker arrangement is achieved by giving the two line breakers different priorities. Refer to Figure 3:. At single breaker application, *Priority* is set to *No*, and this has no influence on the function. The signal *Started* is sent to the next function module. At double breaker and similar applications, *Priority* is set *High* for the Master terminal and *Priority = Low* for the Slave.

While reclosing is in progress in the master, it issues the signal -WFMASTER. A reset delay ensures that the -WAIT signal is kept high for the breaker closing time. After an unsuccessful reclosing, it is also maintained by the signal -UNSUC. For the slave terminal, the input signal -WAIT holds back a reclosing operation. A time *tWait* sets a maximum waiting time for the reset of the Wait signal. At time-out, it interrupts the reclosing cycle by a WM-INH, wait for master inhibit, signal.

5 Testing

The user can test the auto-reclosing function, for example, during commissioning or after a reconfiguration. The test can be performed with protection and trip functions, as the synchro-check function (with energising check), applied.

Figure 5: illustrates a recommended testing scenario, where the circuit breaker is simulated by an external bistable relay (BR), e.g. an RXMVB2 or an RXMVE1. These manual switches are available:

- Switch close (SC)
- Switch trip (ST)
- Switch ready (SRY).

SC and ST can be push-buttons with spring return. If no bistable relay is available, replace it with two self-reset auxiliary relays as in Figure 5:.

Use a secondary injection relay test set to operate the protection function. It is possible to use the BR to control the injected analogue quantities so that the fault only appears when the BR is picked up—simulating a closed breaker position.

To make the arrangement more elaborate, include the simulation of the operation gear condition, AR01-CBREADY, for the sequences Close-Open (CO) and Open-Close-Open (OCO).

The AR01-CBREADY condition at the CO sequence type is usually low for a recharging time of 5-10 s after a closing operation. Then it is high. The example shows that it is simulated with SRY, a manual switch.

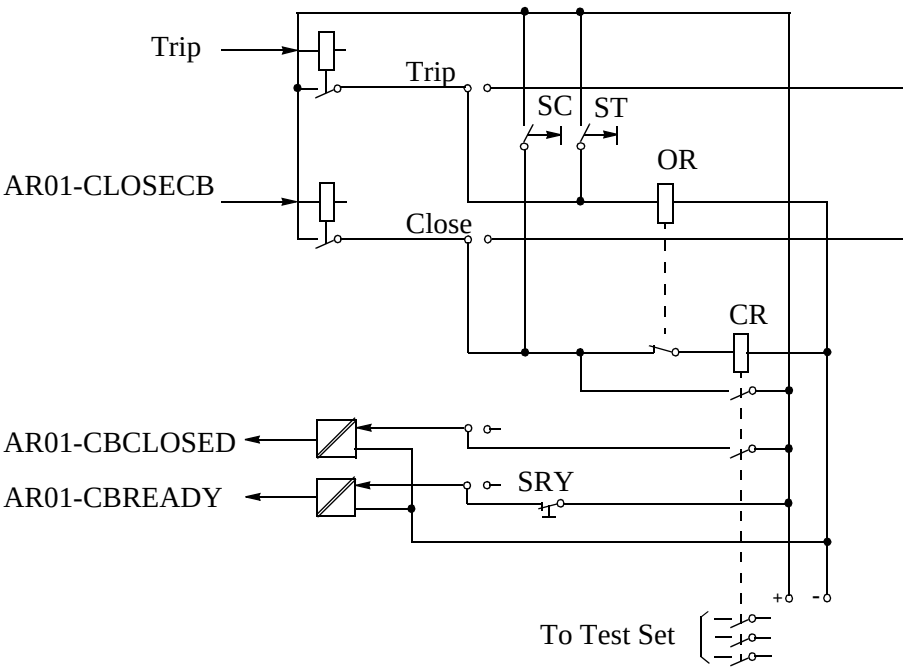

Figure 5: Simulating breaker operation with two auxiliary relays.

5.1 Suggested testing procedure

5.1.1 Preparations

1.1 Check the settings of the auto-reclosing (AR) function. The operation can be set at Stand-by (Off).

HMI tree:

Settings
Functions
Group n
AutoRecloser
AutoRecloser n

If any timer setting is changed so as to speed-up or facilitate the testing, they must be set to normal after the testing. A verification test has to be done afterwards.

1.2 Read and note the reclosing operate counters from the HMI tree:

ServiceReport
Functions
AutoRecloser
AutoRecloser n
Counters

1.3 Do the testing arrangements outlined above, for example, as in Figure 5:.

1.4 The AR01-CBCLOSED breaker position, the commands Trip and Closing, AR01-CLOSECB, and other signals should preferably be arranged for event recording provided with time measurements. Otherwise, a separate timer or recorder can be used to check the AR open time and other timers.

5.1.2 Check the AR functionality

2.1 Ensure that the voltage inputs to Synchro-check gives accepted conditions at open breaker (BR). They can, for example, be Live busbar and Dead line.

2.2 Set the operation at On.

2.3 Make a BR pickup by a closing pulse, the SC-pulse.

2.4 Close SRY, Breaker ready and leave it closed.

2.5 Inject AC quantities to give a trip and start AR.
Observe or record the BR operation. The BR relay should trip and reclose. After the closing operation, the SRY switch could be opened for about 5 s and then closed.
The AR open time and the operating sequence should be checked, for example, in the event recording.
Check the operate indications and the operate counters.

Should the operation not be as expected, the reason must be investigated. It could be due to an AR Off state or wrong program selection, or not accepted synchro-check conditions.

2.6 A few fault cases may be checked, for example, single-phase, two-phase and three-phase trips, transient, and permanent fault. The signal sequence diagrams in Figure 12: and 13 can be of guidance for the checking.

5.1.3 Check the reclosing requirements

The number of cases can be varied according to the application. Examples of selection cases are:

3.1 Inhibit input signal: Check that the function is operative and that the breaker conditions are okay. Apply an AR01-INHIBIT input signal and start the reclosing function. *No reclosing!*

3.2 Breaker open, closing onto a fault: Set the breaker simulating relay, BR, in position open. Then close it with the SC switch and start the AR within one second. *No reclosing!*

3.3 Breaker not ready: Close the BR breaker relay and see that everything except for AR01-CBREADY is in normal condition (SRY is open). Start the AR function. *No reclosing!*

3.4 Lack of verification from synchro-check: Check the function at non-acceptable voltage conditions. Wait for the time out, >5 s. *No reclosing!*

3.5 Operation Stand-by and Off: Check that no reclosing can occur with the function in Off state.

3.6 Depending on the program selection and the selected fault types that start and inhibit reclosing, a check of no unwanted reclosing can be made. For example, if only single-phase reclosing is selected, a test can verify that there is no reclosing after two-phase and three-phase trips.

5.1.4 Test of Master-Slave

If a multi-breaker arrangement is used for the application and priorities are given for the master (high) and slave (low) terminals, test that correct operation takes place and that correct signals are issued. The signals WFMASTER, UNSUC, WAIT and INHIBIT should be involved.

5.1.5 Termination of the test

After the test, restore the equipment to normal or desired state.

Especially check these items:

4.1 Reclosing operate counters: Check and record the counter contents. (Reset if it is the user's preference.)

HMI tree:

ServiceReport
Functions
AutoRecloser
AutoRecloser n
Counters
Clear Counters

4.2 Setting parameters and the Operation parameter as required.

4.3 Test switch or disconnected links of connection terminals.

4.4 Normal indications.

(If so preferred, the disturbance report may be cleared.)

HMI tree:

DisturbReport
ClearDistRep

6 Appendix

6.1 Function block

AR01

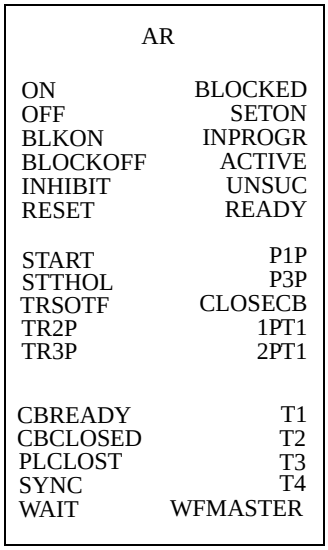

6.2 Function block diagrams

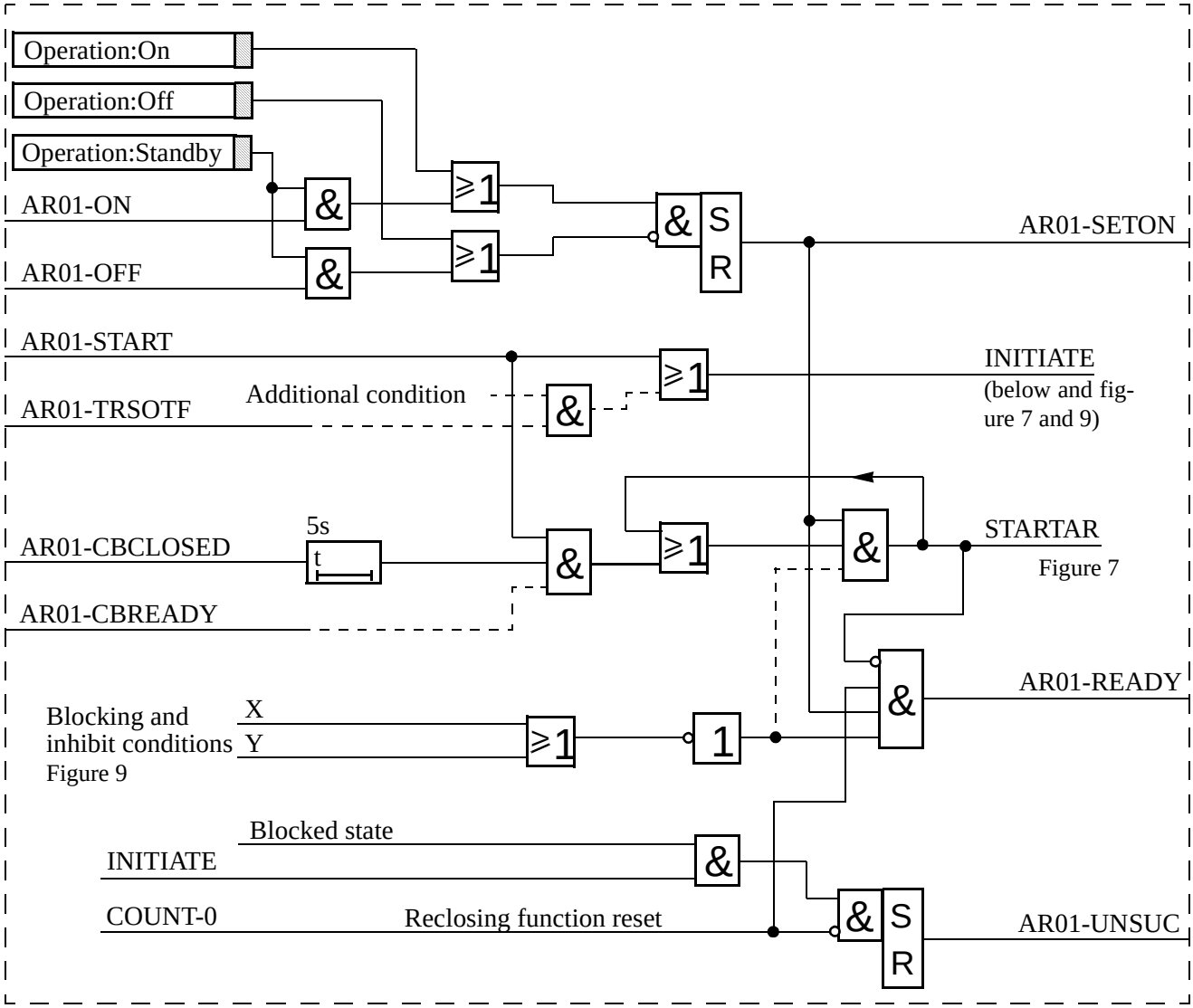

Figure 6: Auto-reclosing on/off control and start

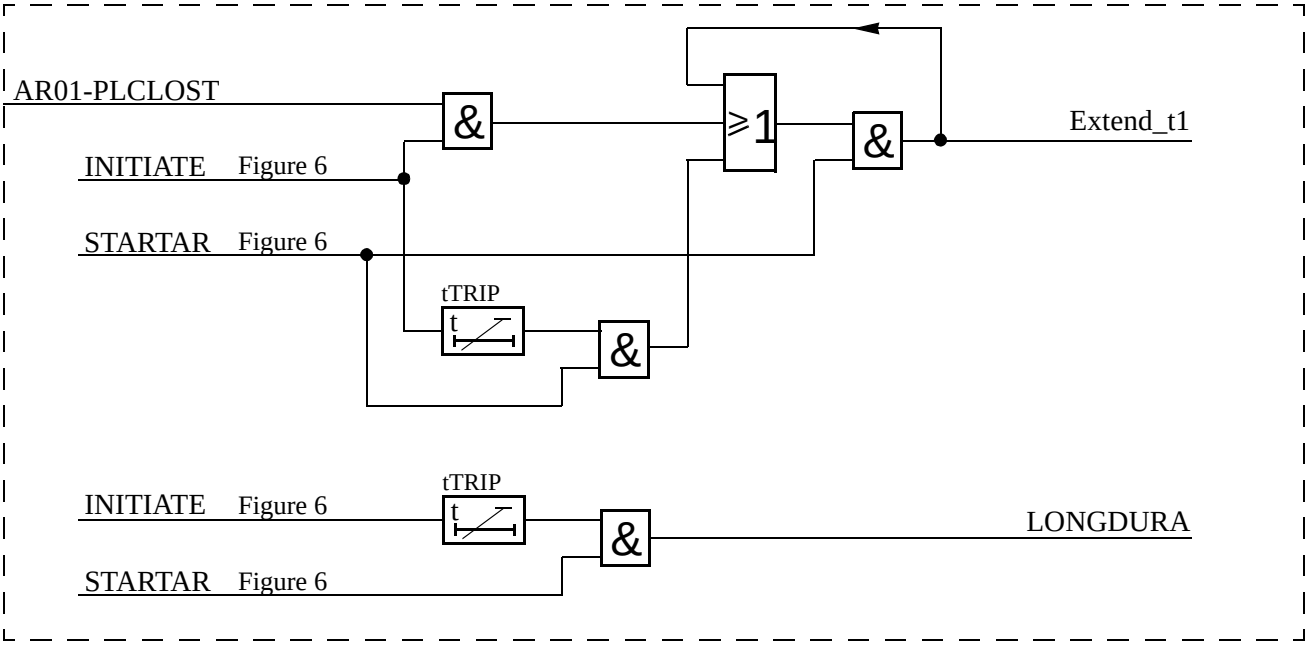

Figure 7: Control of extended AR open time, shot 1

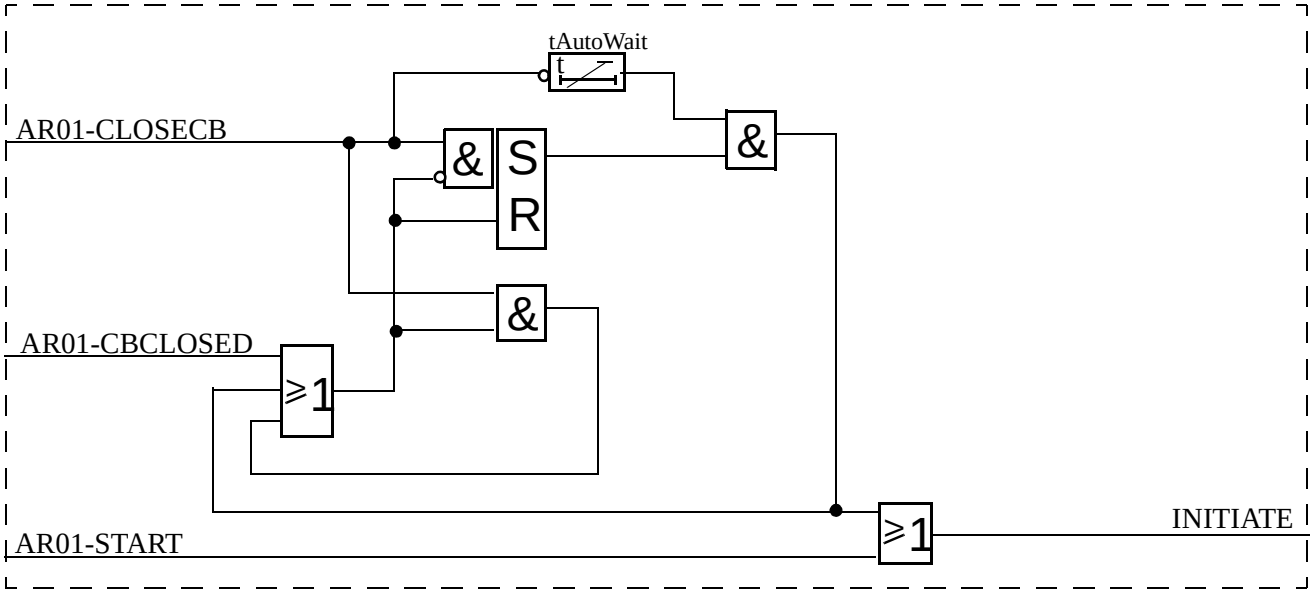

Figure 8: Automatic proceeding of shot 2 to 4

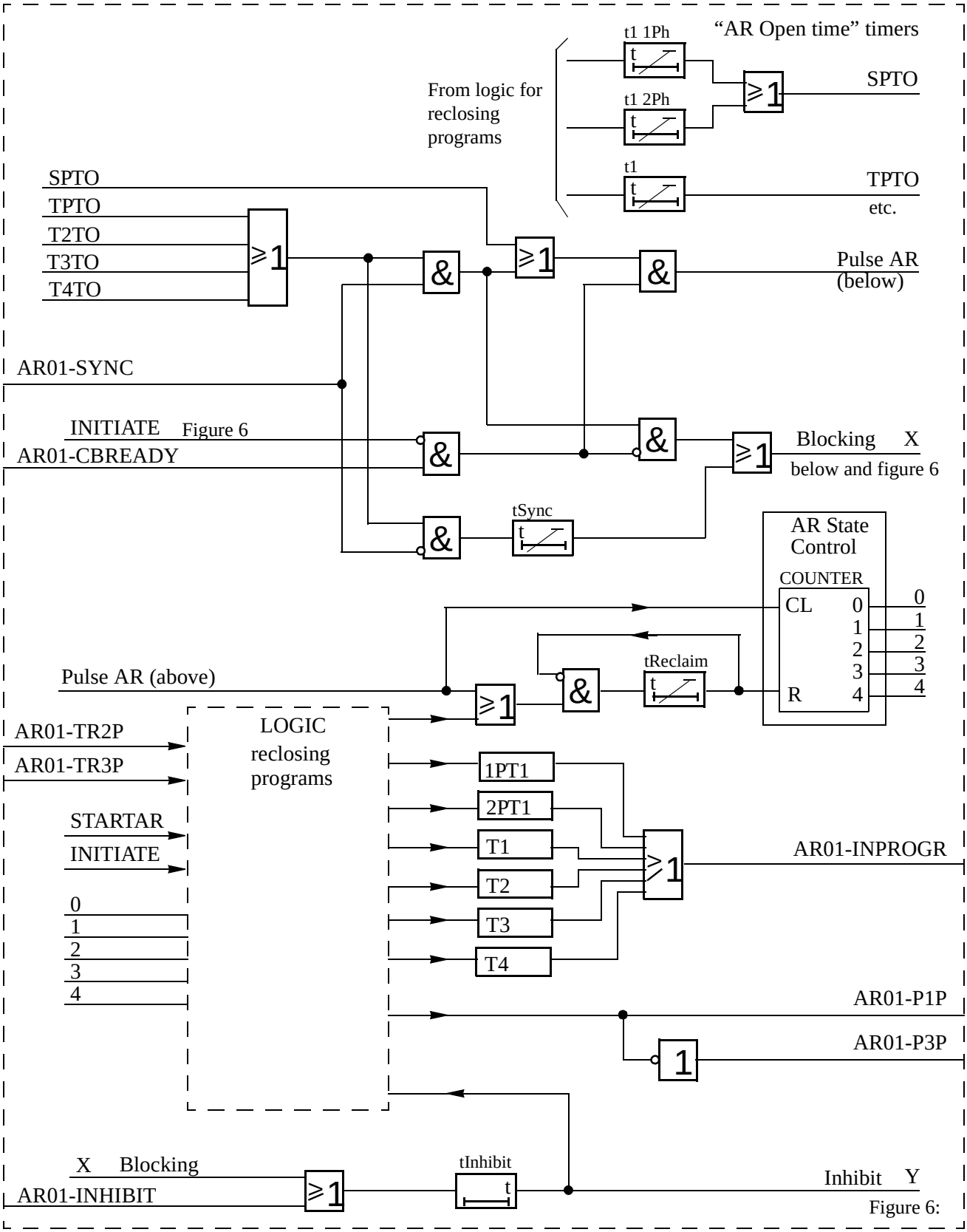

Figure 9: Reclosing checks and "Reclaim" and "Inhibit" timers.

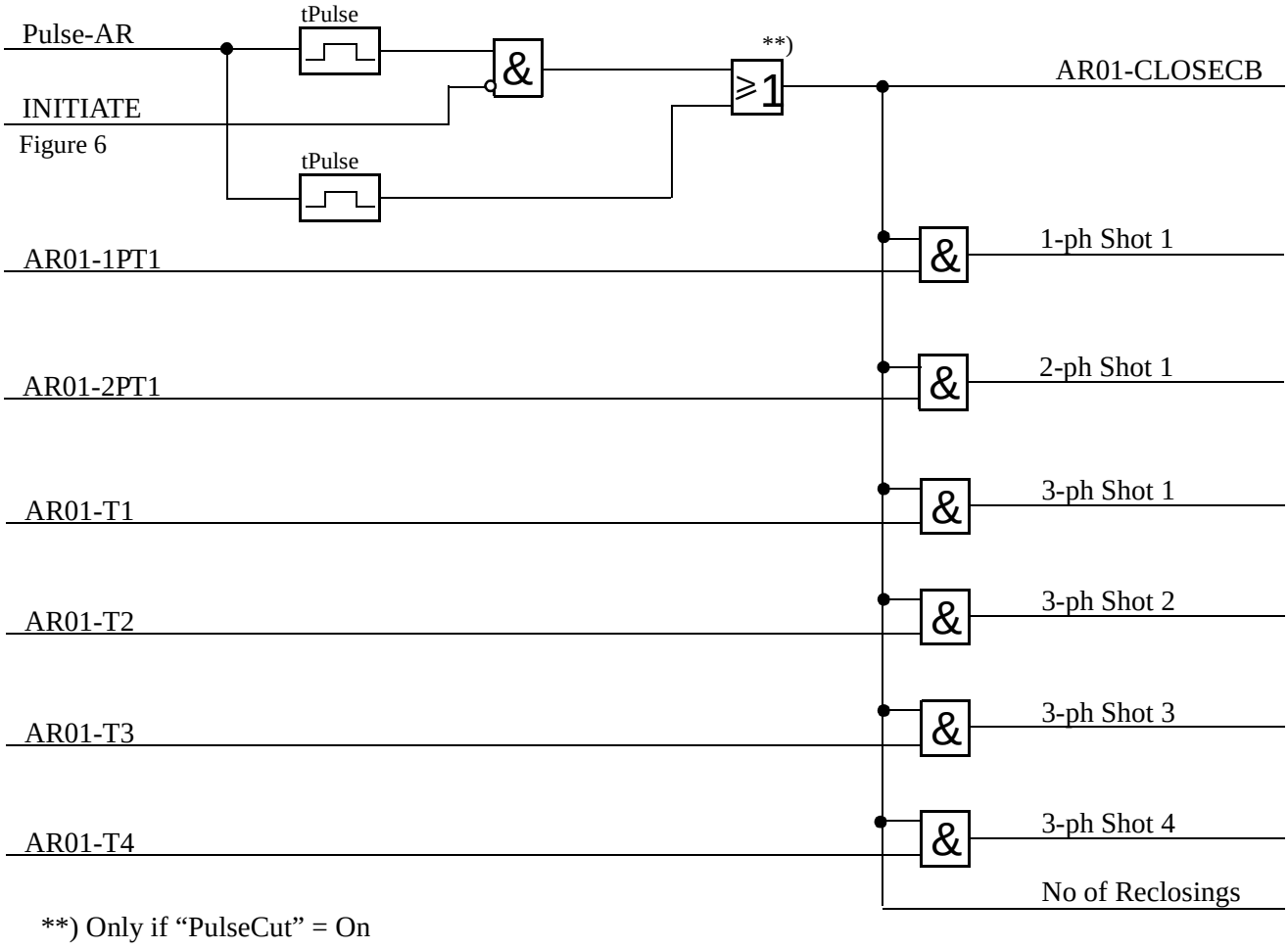

Figure 10: Pulsing of close command and driving of operation counters

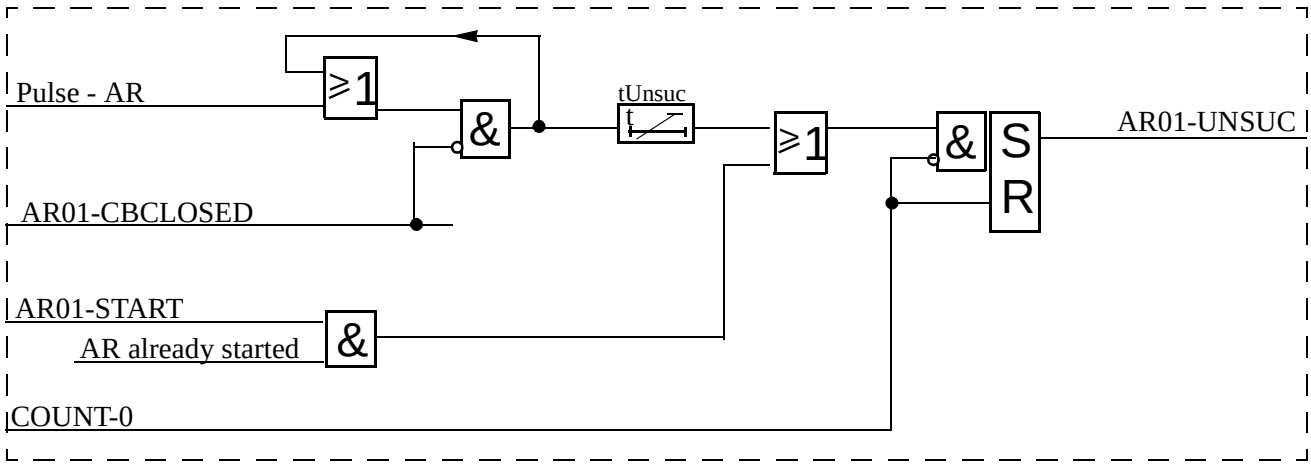

Figure 11: Issuing of the AR01-UNSUC signal

6.3 Sequence examples

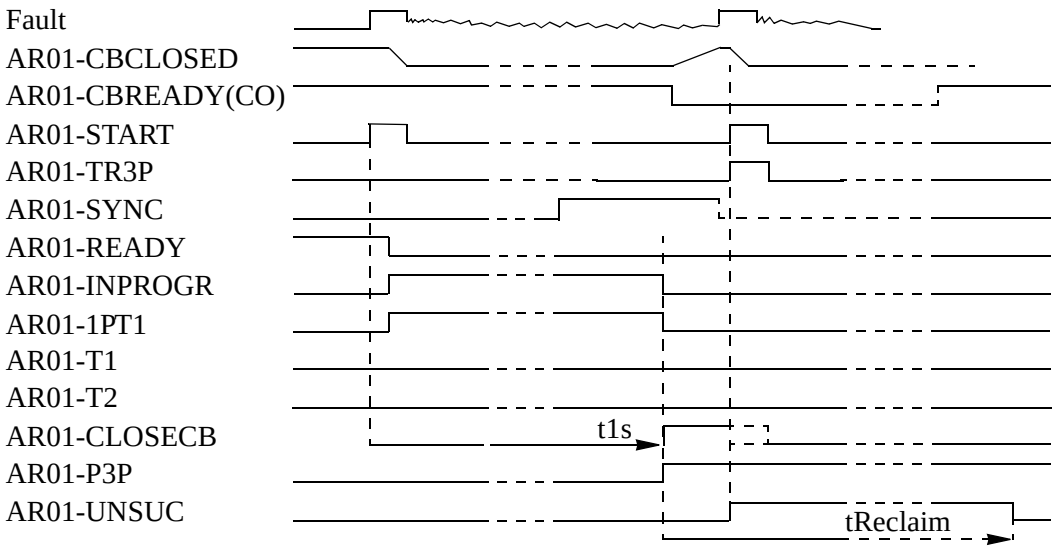

Figure 12: Permanent single-phase fault. Program 1/2/3ph, single-phase single-shot reclosing.

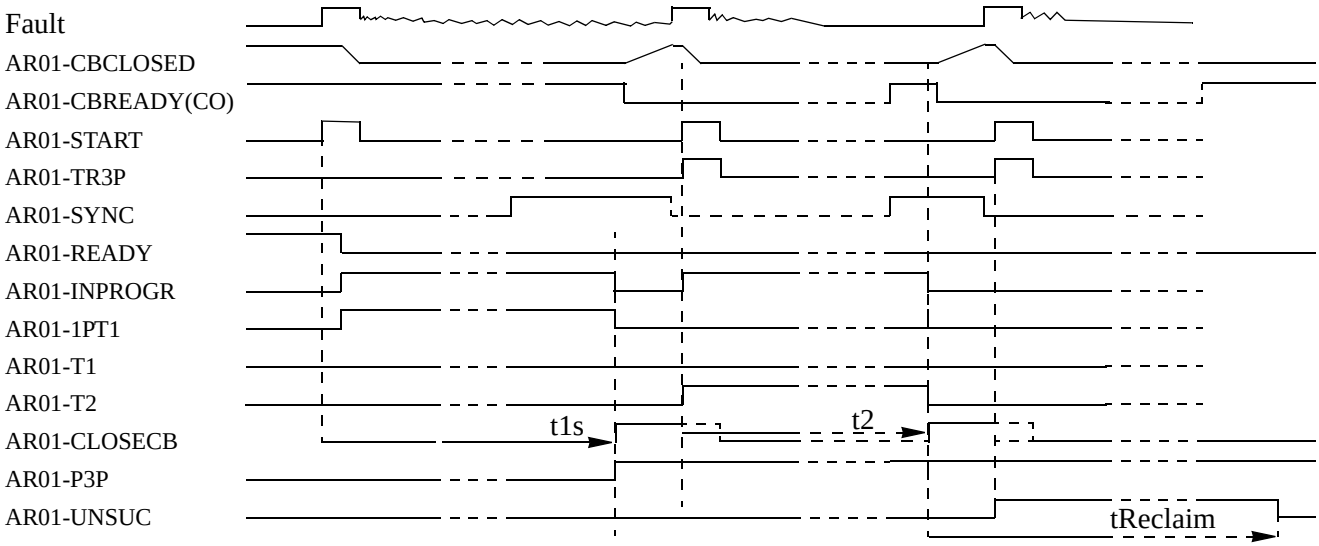

Figure 13: Permanent single-phase fault. Program 1ph + 3ph or 1/2ph + 3ph, two-shot reclosing.

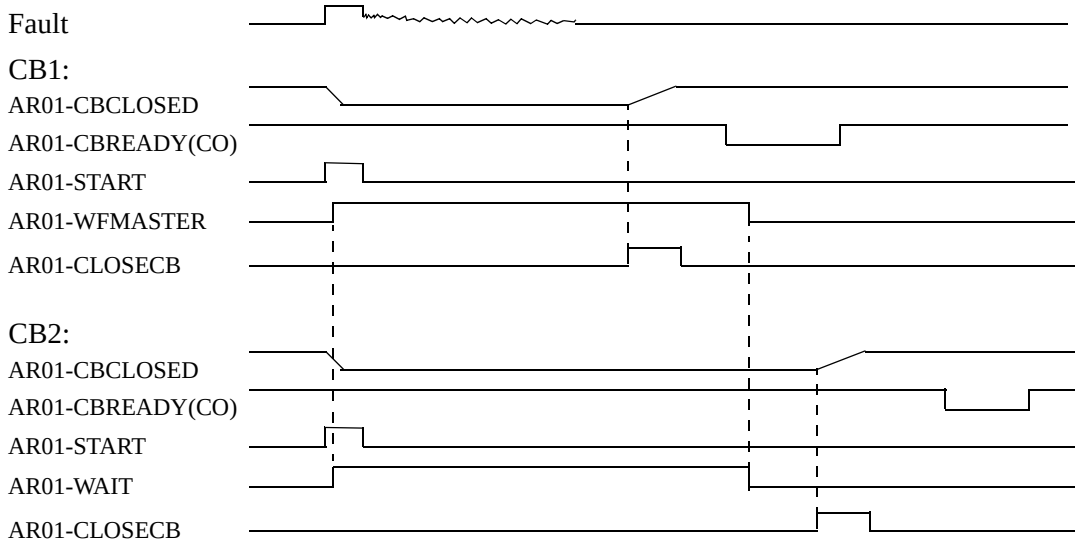

Figure 14: Sequential reclosing of two line breakers with priority.

6.4 Signal list

The signal list shows the input and output signals which can be interfaced with the auto-recloser 1. Data is same for other auto-recloser functions (2 to 6) with signal prefix AR02- to AR06-.

Table 2:

Block	Signal	Type	Description
AR01-	ON	IN	Enable auto-recloser operation
AR01-	OFF	IN	Disable auto-recloser operation
AR01-	BLKON	IN	Set auto-recloser in blocked state
AR01-	BLOCKOFF	IN	Release of auto-recloser in blocked state
AR01-	INHIBIT	IN	Inhibit auto-reclosing cycle
AR01-	RESET	IN	Resets auto-recloser
AR01-	START	IN	Start of auto-reclosing cycle
AR01-	STTHOL	IN	Start of thermal overload protection
AR01-	TRSOTF	IN	Start of auto-reclosing cycle from switch-onto-fault
AR01-	TR2P	IN	Two-phase trip
AR01-	TR3P	IN	Three-phase trip
AR01-	CBREADY	IN	Circuit breaker ready for operation
AR01-	CBCLOSED	IN	Circuit breaker closed
AR01-	PLCLOST	IN	Permissive communication channel out of service
AR01-	SYNC	IN	OK from external synchronising/energising unit
AR01-	WAIT	IN	Wait from master for sequential tripping
AR01-	BLOCKED	OUT	Auto-recloser in blocked state
AR01-	SETON	OUT	Auto-recloser switched on
AR01-	INPROGR	OUT	Auto-reclosing attempt in progress
AR01-	ACTIVE	OUT	Auto-reclosing cycle in progress
AR01-	UNSUC	OUT	Unsuccessful auto-reclosing
AR01-	READY	OUT	Auto-recloser prepared for reclose cycle
AR01-	P1P	OUT	Permit single-phase trip
AR01-	P3P	OUT	Prepare three-phase trip
AR01-	CLOSECB	OUT	Closing command for circuit breaker
AR01-	1PT1	OUT	Single-phase reclosing in progress
AR01-	2PT1	OUT	Two-phase reclosing in progress
AR01-	T1	OUT	Three-phase reclosing, shot 1 in progress
AR01-	T2	OUT	Three-phase reclosing, shot 2 in progress
AR01-	T3	OUT	Three-phase reclosing, shot 3 in progress
AR01-	T4	OUT	Three-phase reclosing, shot 4 in progress
AR01-	WFMASTER	OUT	Wait from master for sequential tripping

6.5 Setting table

Parameter	Range	Unit	Default	Parameter description
Operation	Off, Stand-by, On		Off	Auto-recloser Off/Stand-by/On
NoOfRe-closing	1-4		1	Maximum number of reclosing attempts
FirstShot	3 ph, 1/2/3 ph, 1/2 ph, 1 ph+1*2 ph, 1/2+1*3 ph, 1 ph+1*2/3 ph		3 ph	Restriction of fault type for first reclosing attempt
Extended t1	Off, On		Off	Extended dead time for loss of permissive channel
t1 1Ph	0.000-60.000	s	1.000	Open time for first auto-reclosing at single-phase
t1 2Ph	0.000-60.000	s	1.000	Open time for first auto-reclosing at two-phase
t1	0.000-60.000	s	1.000	Open time for first auto-reclosing at three-phase
t2	0.0-9000.0	s	30.0	Open time for second auto-reclosing
t3	0.0-9000.0	s	30.0	Open time for third auto-reclosing
t4	0.0-9000.0	s	30.0	Open time for fourth auto-reclosing
tSync	0.0-9000.0	s	2.0	Auto-recloser maximum wait time for sync
tPulse	0.000-60.000	s	0.200	Circuit breaker closing pulse length
CutPulse	Off, On		Off	Shorten closing pulse at a new trip
tReclaim	0.0-9000.0	s	60.0	Auto-recloser reclaim time
tInhibit	0.000-60.000	a	5.000	Inhibit reset time
CB Ready	CO, OCO		CO	Select type of circuit breaker ready signal
tTrip	0.000-60.000	s	1.000	Block auto-reclosing for long trip duration
Priority	None, Low, High		None	Priority selection between adjacent terminals
tWaitFor-Master	0.0-9000.0	s	60.0	Maximum wait time for Master
AutoCont	Off, On		Off	Continue with next reclosing attempt if breaker not closes
BlockUnsuc	Off, On		Off	Block auto-recloser at unsuccessful auto-reclosing
tAutoWait	0.000-60.000	s	2.000	Maximum wait time between shots
UnsucMode	NoCBCheck, CBCheck		NOCB-Check	Unsuccessful-signal mode
tUnsuc	0.0-9000.0	s	30	CB Check time before unsuc

1 Application

Automatic reclosing (AR) is a well-established method to restore the service of a power line after a transient line fault. The majority of line faults are flashover arcs, which are transient by nature. When the power line is switched off by operation of line protection and line breakers, the arc de-ionises and recovers voltage withstand at a somewhat variable rate. So a certain line *dead time* is needed. But then line service can resume by the auto-reclosing of the line breakers. Select the length of the dead time to enable good probability of fault arc de-ionisation and successful reclosing.

For the individual line breakers and auto-reclosing equipment, the Auto-reclose open time (AR open time) expression is used.
At simultaneous tripping and reclosing at the two line ends, Auto-reclose open time equals the dead time of the line. Otherwise these two times may differ.

In case of a permanent fault, the line protection trips again at reclosing to clear the fault. Figure 1: shows the operation sequence and some expressions.

The reclosing function can be selected to perform three-phase reclosing from single-shot to multiple-shot reclosing program. The three-phase auto-reclose open time can be set to give either high-speed auto-reclosing (HSAR) or delayed auto-reclosing (DAR).

Three-phase auto-reclosing can be performed with or without the use of synchro-check and energising check.

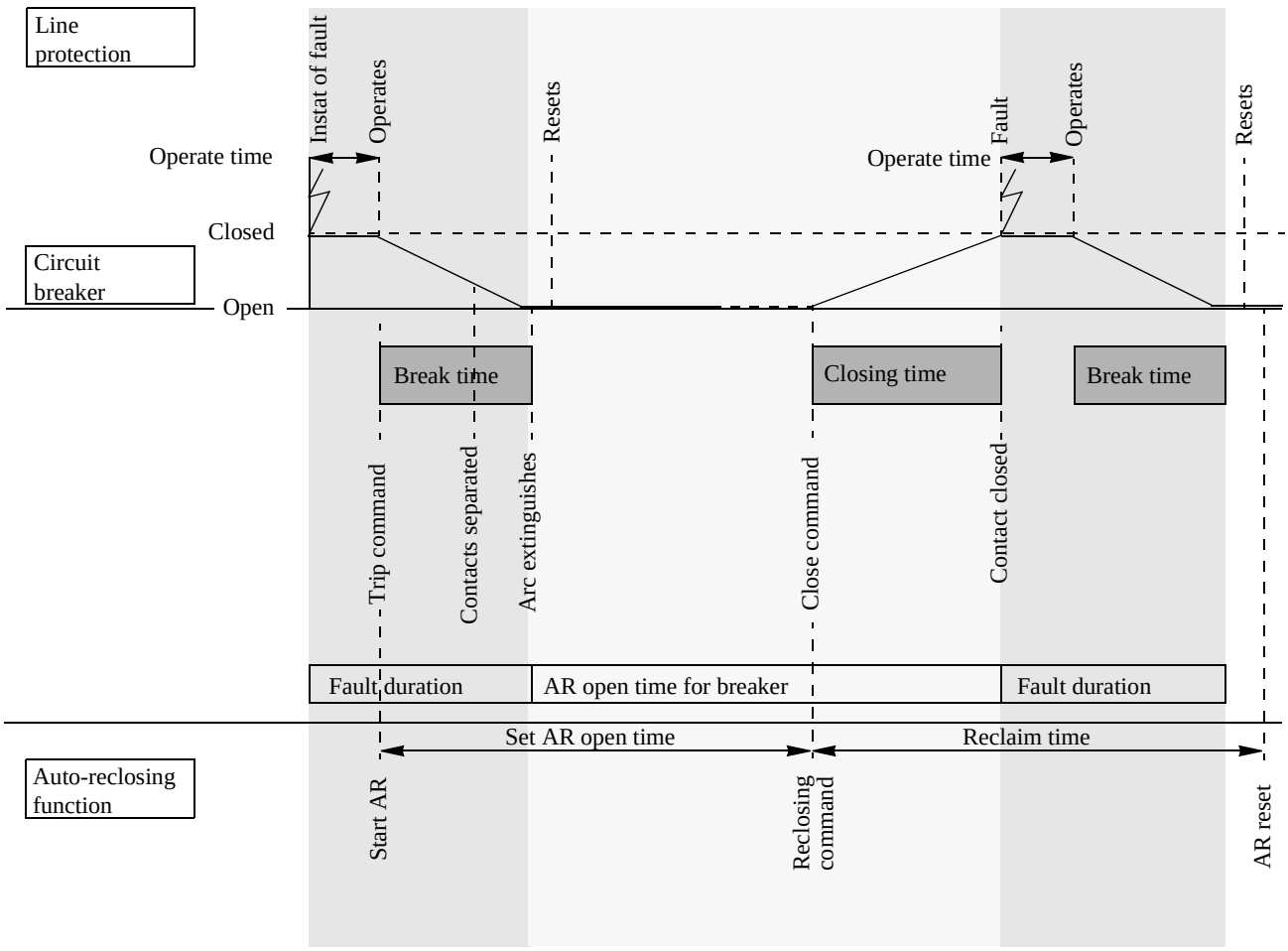

Figure 1: Single-shot auto-reclosing at a permanent fault.

2 Theory of operation

The auto-reclosing function first co-operates with the line protection functions, the trip function, the circuit-breaker and the synchro-check function. It can also be influenced by other protection functions such as shunt reactor protection through binary input signals and AR On/Off manual control. It can provide information to the disturbance and service report functions, event recording, indications, and reclosing operation counters.

The reclosing function outputs and counters can be viewed and reset on the local HMI at:

ServiceReport
Functions
AutoRecloser
AutoRecloser n

The auto-reclosing is a pure logical function that works with logical or binary signals, logical operations and timers.

2.1 Input and output signals, single breaker arrangement

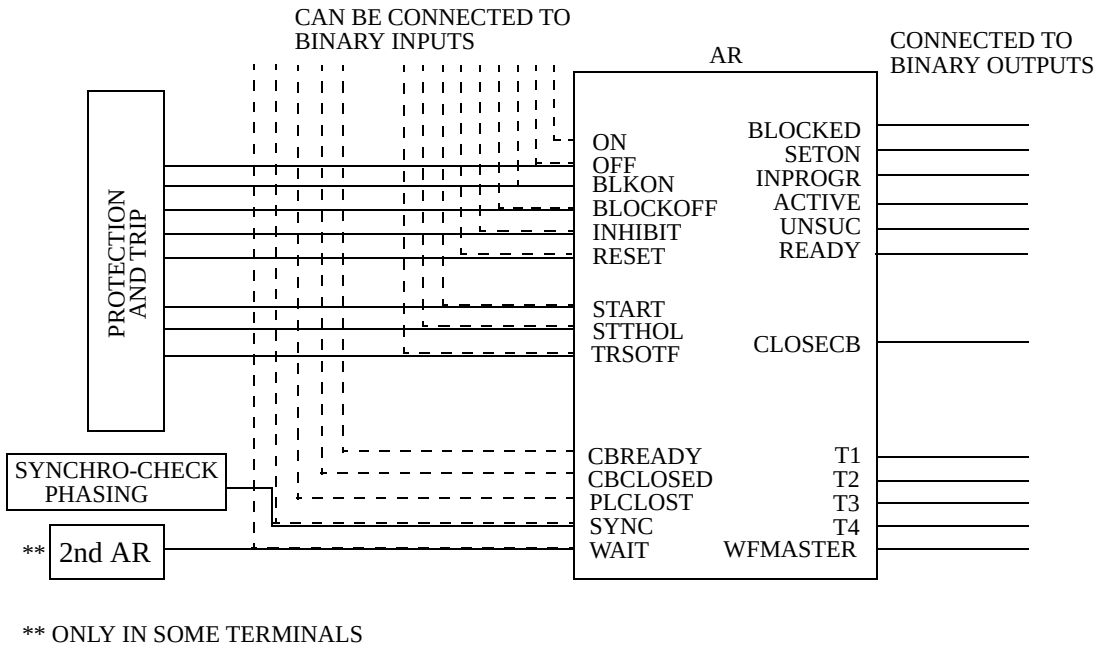

** ONLY IN SOME TERMINALS

Figure 2: Three-phase auto-reclosing; input and output signals.

The input signals can be connected to binary inputs or internal functions of the terminal. The output signals can be connected to binary output relays. It is also possible to connect the signals to free logic functions, for example OR-gates, and in that way add connection links.

The input and output signals which can be interfaced with the auto-recloser 1 are presented in this document. Data is the same for other auto-recloser functions (2 to 6) with signal prefix AR02- to AR06-.

Input signals:

AR01-ON	Switches the auto-reclosing On (at Operation = Stand-by).
AR01-OFF	Switches the auto-reclosing Off (at Operation =Stand-by).
AR01-BLKON	Sets the auto-recloser in blocked state.
AR01-BLOCKOFF	Releases the auto-recloser from the blocked state.
AR01-INHIBIT	Inhibits an auto-reclosing cycle. Interrupts and blocks auto-reclosing. The input can, for example, be activated by a shunt reactor, delayed back-up protection or breaker-failure protection. There is a tInhibit reset timer to ensure blocking during a few seconds after the signal is removed.
AR01-RESET	Resets the auto-recloser.
AR01-START	Auto-reclosing start by a protection trip signal. It also makes the reclosing program continue at a repeated trip, if multi-shot reclosing is selected.
AR01-STTHOL	Start of thermal overload protection. Will block the auto-reclosing.
AR01-TRSOTF	Protection trip switch-onto-fault. This signal alone does not start reclosing. But at a reclosing onto a permanent fault it may appear and let the function move on to AR01-UNSUC (unsuccessful) or second-shot reclosing as programmed.
AR01-CBREADY	A condition for the start of a reclosing cycle. The circuit breaker must have its operating gear ready (manoeuvre spring charged) for a Close-Open (CO) or an Open-Close-Open (OCO) operations to allow the start of an auto-reclosing cycle. This input can also be connected to circuits that monitor the breaker pressure. If it is not ready at start, it is unlikely that it is ready by the end of the AR open time.
AR01-CBCLOSED	Circuit breaker closed. A condition for the start of a reclosing cycle. The circuit breaker (CB) must be closed at least for five seconds to allow a new AR cycle to start. It prevents start at closing onto a fault. It also prevents the reclosing of a breaker that is open at the protection trip, which is possible in a multiple breaker arrangement.
AR01-PLCLOST	Power line carrier or other form of permissive signal lost. An optional input signal at loss of a communication channel in a permissive line protection scheme. Can extend the AR open time.

AR01-SYNC	Synchro-check fulfilled from the internal synchro-check/phasing function or an external device required for three-phase auto-reclosing.

Output signals:

AR01-BLOCKED	The auto-recloser is in blocked state.
AR01-SETON	Indicates that the AR operation is switched on, operative.
AR01-INPROGR	Auto-reclosing attempt in progress. Activated during the AR open time.
AR01-ACTIVE	Auto-reclosing cycle in progress.
AR01-UNSUC	Auto-reclosing unsuccessful. Activated at a new trip after the last programmed shot (selected number of reclosing shots), or at trip while reclosing is blocked. The output resets after the reclaim time.
AR01-READY	Indicates that the AR function is ready for a new AR cycle. It is On but not started or blocked. This output is high when the function is On, at rest, and prepared for operation. The signal can be used by a protection function to extend the reach before reclosing, when required.
AR01-CLOSECB	Close circuit-breaker command.
AR01-T1(T2 - T4)	Three-phase reclosing, Shot 1(2 - 4) in progress.

2.2 Multi-breaker arrangement

In stations with a 1 1/2-breaker, double breaker or ring bus arrangement, there are two breakers which switch that end of the line. The reclosing of the line breakers can be made in a sequential order. One breaker is reclosed first, and if the reclosing is successful, the second breaker is reclosed as well. In the case of a permanent fault, the second breaker need not to be reclosed. By fitting one REx 5xx terminal for each line breaker, and by a few interconnections between them, sequential reclosing can be achieved. See Figure 3:.

One terminal is selected as *Master* and given *high* reclosing *priority.* At line protection trip, the two reclosing functions are started, but the master issues a *Wait For Master* signal to the *Slave* (with *low* reclosing *priority*). At unsuccessful reclosing by the master, an *Inhibit* reclosing signal is sent to the slave terminal to interrupt and reset the reclosing function.

AR01-WAIT	Signal to the low priority auto-reclosing function from the master in multi-breaker arrangements for sequential reclosing.
AR01-WFMASTER	Wait for master. Issued by the high priority unit for sequential reclosing.

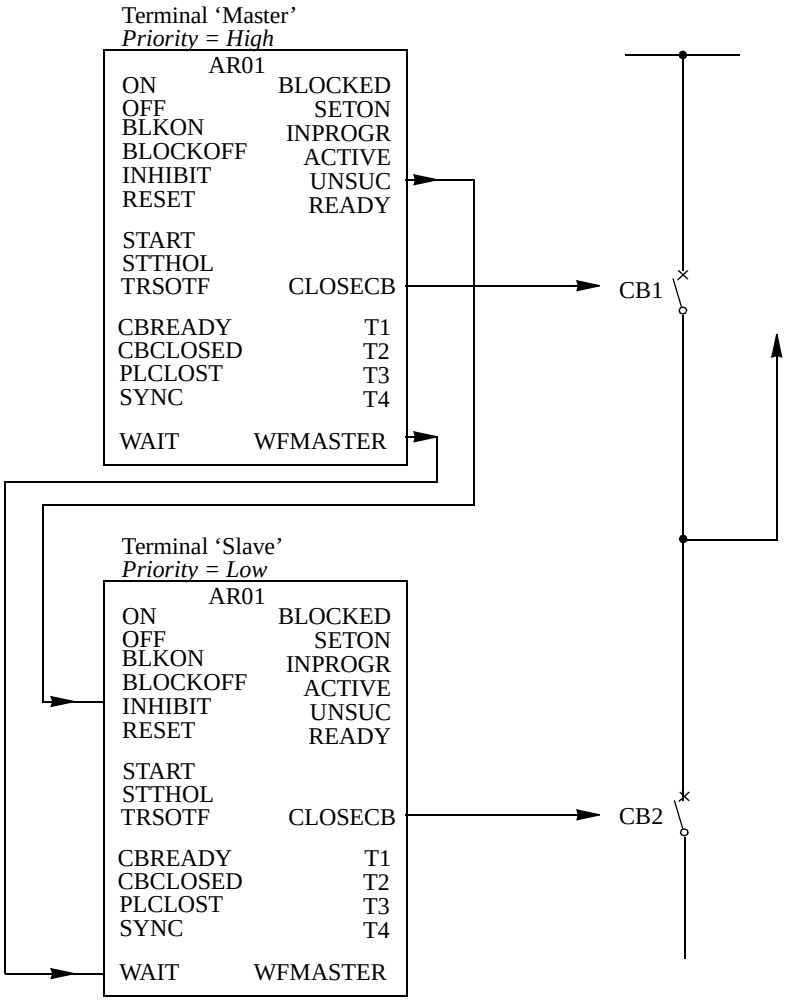

*) Other input/output signals as in previous single breaker arrangement.

Figure 3: Additional input and output signals at multi-breaker arrangement.

2.3 AR Operation

The user can control the auto-reclosing function from the local HMI. Use the parameter *Operation*, which can be set to Off, Stand-by or On. See Figure 6:.

Off deactivates the auto-recloser. *On* activates automatic reclosing. Stand-by enables On and Off Operation via input signal pulses.

3 Design

3.1 Start and control of the auto-reclosing

The automatic operation of the auto-reclosing function is controlled by the parameter *Operation* and the input signals as described above. When it is on, the AR01-SETON output is high (active). See Figure 6:.

The auto-reclosing function is activated at a protection trip by the AR01-START input signal. At repeated trips, this signal is activated again to make the reclosing program continue.

There are a number of conditions for the start to be accepted and a new cycle started. After these checks, the start signal is latched in and the *Started* state signal is activated. It can be interrupted by certain events.

3.2 Extended AR open time, shot 1

The purpose of this function is to adapt the length of the AR Open time to the possibility of non-simultaneous tripping at the two line ends. If a permissive communication scheme is used and the permissive communication channel (for example, PLC, power-line carrier) is out of service at the fault, there is a risk of sequential non-simultaneous tripping. To ensure a sufficient line dead time, the AR open time is extended by 0.4 s. The input signal AR01-PLCLOST is checked at tripping. See Figure 7:. Select this function (or not) by setting the Extended t1 parameter to On (or Off).

3.3 Long trip signal

During normal circumstances, the trip command resets quickly due to fault clearing. The user can set a maximum trip pulse duration by tTrip. At a longer trip signal, the AR open dead time is extended by Extend_t1. If the Extended t1 = Off, a long trip signal interrupts the reclosing sequence in the same way as AR01-INHIBIT.

3.4 Reclosing program

The three-phase reclosing program can be performed with up to maximum four reclosing attempts (shots), selectable with the NoOfReclosing parameter.

For the example (see Figures 6 and 12), the AR function is assumed to be *On* and *Ready.* The breaker is closed and the operation gear ready, manoeuvre spring charged etc.

AR01-START is received and sealed-in at operation of the line protection. The AR01-READY output is reset (Ready for a new AR cycle).

Immediately after the start-up of the reclosing and tripping of the breaker, the input (in Figure 6:) AR01-CBCLOSED is low (possibly also AR01-CBREADY at type OCO). The AR Open-time timer, t1, keeps on running.
At the end of the set AR open-time, the three-phase AR time-out (Figure 9:) is activated and goes on to the output module for further checks and to give a closing command to the circuit breaker.

3.5 Blocking of a new reclosing cycle

A new start of a reclosing cycle is blocked for the reclaim time after the selected number of reclosing attempts are performed.

3.6 Reclosing checks and Reclaim timer

An AR open-time time-out signal is received from a program module.
At three-phase reclosing, a synchro-check and/or energising check or voltage check can be used. It is possible to use an internal or an external synchro-check function, configured to AR01-SYNC.
If a reclosing without check is preferred, configure the input AR01-SYNC to FIXD-ON (set to 1).

Another possibility is to set the output from the internal synchro-check function to a permanently active signal. Set Operation = Release in the synchro-check function. Then AR01-SYNC is configured to SYNx-AUTOOK.

At confirmation from the synchro-check or if the reclosing is of single-phase type, the signal passes on.

At AR01-CBREADY signal of the Close-Open (CO) type, it is checked that this signal is present to allow a reclosing.

The synchronising and energising check must be fulfilled within a certain period of time, tSync. If it does not, or if the other conditions are not fulfilled, the reclosing is interrupted and blocked.

The Reclaim-timer defines a period from the issue of a reclosing command, after which the reclosing function is reset. Should a new trip occur within this time, it is treated as a continuation of the first fault.
When a closing command is given (Pulse AR), the reclaim timer is started.

There is an AR State Control, Figure 9:, to track the actual state in the reclosing sequence.

3.7 Pulsing of CB closing command

The circuit breaker closing command, AR01-CLOSECB, is made as a pulse with a duration, set by the tPulse parameter. For circuit breakers without an anti-pumping function, the closing-pulse-cutting described below can be used. It is selected by means of the CutPulse parameter (set to On). In case of a new trip pulse, the closing pulse will be cut (interrupted). But the minimum length of the closing pulse is always 50 ms.

At the issue of a reclosing command, the associated reclosing operation counter is also incremented.
There is a counter for each type of reclosing and one for the total number of reclosings. See Figure 10:.

3.8 Transient fault

After the reclosing command, the reclaim timer keeps running for the set time. If no tripping occurs within this time, tReclaim, the auto-reclosing function will be reset. The circuit breaker remains closed and the operating gear ready (manoeuvre spring is recharged). AR01-CBCLOSED = 1 and AR01-CBREADY = 1.

After the reclaim time, the AR state control resets to original rest state, with AR01-SETON = 1 and AR01-READY = 1. The other AR01 outputs = 0.

3.9 Unsuccessful signal

Normally the signal AR01-UNSUC appears when a new start is received after the last reclosing attempt has been made. See Figure 11:. It can be programmed to appear at any stage of a reclosing sequence by setting the parameter *UnsucMode* = On. The UNSUC signal is attained after the time tUnsuc.

3.10 Permanent fault

If a new trip takes place after a reclosing attempt and a new AR01-START or AR01-TRSOTF signal appears, the AR01-UNSUC (Reclosing unsuccessful) is activated. The timer for the first reclosing attempt, t1, cannot be started (Figure 9:).

Depending on the PulseCut parameter setting, the closing command may be shortened at the second trip command.

After time-out of the reclaim timer, the auto reclosing function resets, but the circuit breaker remains open (AR01-CBCLOSED = 0, AR01-CBREADY = 1). Thus the reclosing function is not ready for a new reclosing cycle. See Figure 6: and Figure 12:.

3.11 Automatic confirmation of programmed reclosing attempts

The auto-recloser can be programmed to continue with reclosing attempts two to four (if selected) even if the start signals are not received from the protection functions, but the breaker is still not closed. See Figure 8:. This is done by setting the parameter *AutoCont* = On and the wait time *tAutoWait* to desired length.

4 Configuration and setting

The signals are configured in the CAP 531 configuration tool.

The parameters for the auto-reclosing function are set through the local HMI at:

Settings
Functions
Group n
AutoRecloser
AutoRecloser n

4.1 Recommendations for input signals

See Figure 4: and the default configuration for examples.

AR01-ON and AR01-OFF
may be connected to binary inputs for external control.

AR01-START
should be connected to the protection function trip output which shall start the auto-recloser. It can also be connected to a binary input for start from an external contact. A logical OR gate can be used to multiply the number of start sources.

AR01-INHIBIT
can be connected to binary inputs, to block the AR from a certain protection, such as a line connected shunt reactor, transfer trip receive or back-up protection or breaker-failure protection.

AR01-CBCLOSED and **AR01-CBREADY**
must be connected to binary inputs, for pick-up of the breaker signals. If the external signals are of Breaker-not-ready type, uncharged etc., an inverter can be configured before CBREADY.

AR01-SYNC
is connected to the internal synchro-check function if required. It can also be connected to a binary input. If neither internal nor external synchronising or energising check (dead line check) is required, it can be connected to a permanent 1 (high), by connection to FIXD-ON.

AR01-PLCLOST
can be connected to a binary input, when required.

AR01-TRSOTF
can be connected to the internal line protection, distance protection, trip switch-onto-fault.

AR01-STTHOL
Start of thermal overload protection signal. Can be connected to OVLD-TRIP to block the AR at overload.

Other
The other input signals can be connected as required.

4.2 Recommendations for output signals

See Figure 4: and the default configuration for examples.

AR01-READY
can be connected to the Zone extension of a line protection. It can also be used for indication, if required.

AR01-CLOSECB
connect to a binary output relay for circuit breaker closing command.

Other
The other output signals can be connected for indication, disturbance recording etc., as required.

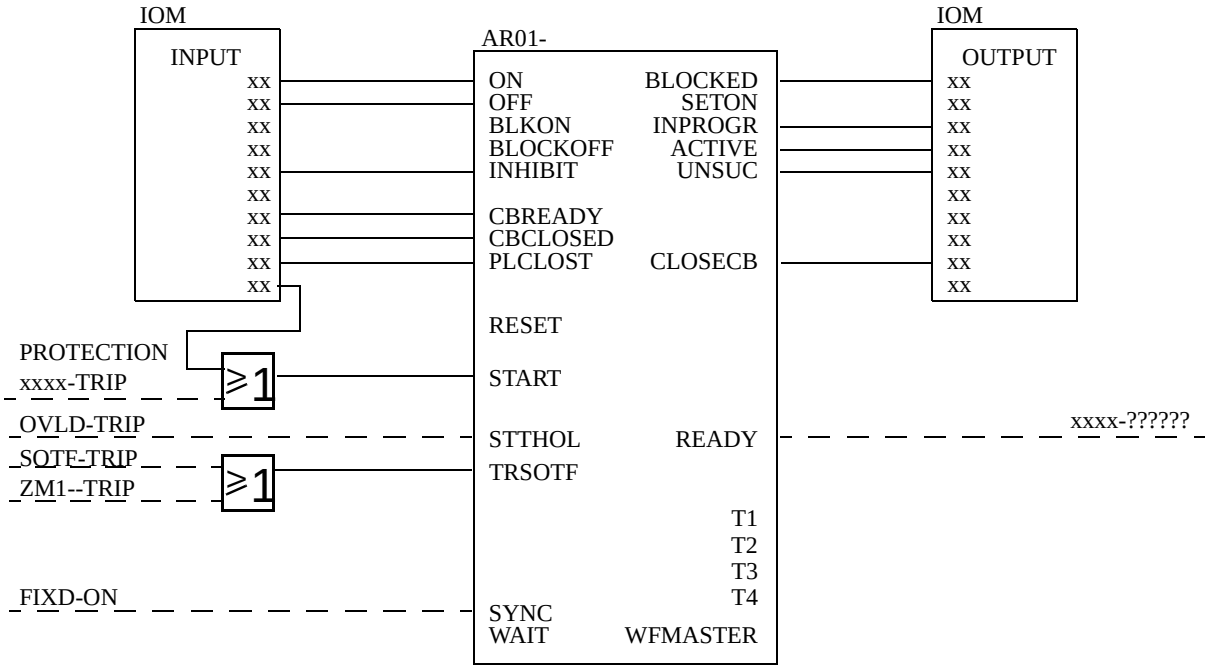

Figure 4: Recommendations for I/O-signal connections.

4.3 Recommendations for multi-breaker arrangement

Sequential reclosing at multi-breaker arrangement is achieved by giving the two line breakers different priorities. Refer to Figure 3:. At single breaker application, *Priority* is set to *No*, and this has no influence on the function. The signal *Started* is sent to the next function module. At double breaker and similar applications, *Priority* is set *High* for the Master terminal and *Priority = Low* for the Slave.

While reclosing is in progress in the master, it issues the signal -WFMASTER. A reset delay ensures that the -WAIT signal is kept high for the breaker closing time. After an unsuccessful reclosing, it is also maintained by the signal -UNSUC. For the slave terminal, the input signal -WAIT holds back a reclosing operation. A time *tWait* sets a maximum waiting time for the reset of the Wait signal. At time-out, it interrupts the reclosing cycle by a WM-INH, wait for master inhibit, signal.

5 Testing

The user can test the auto-reclosing function, for example, during commissioning or after a reconfiguration. The test can be performed with protection and trip functions, as the synchro-check function (with energising check), applied.

Figure 5: illustrates a recommended testing scenario, where the circuit breaker is simulated by an external bistable relay (BR), e.g. an RXMVB2 or an RXMVE1. These manual switches are available:

- Switch close (SC)
- Switch trip (ST)
- Switch ready (SRY).

SC and ST can be push-buttons with spring return. If no bistable relay is available, replace it with two self-reset auxiliary relays as in Figure 5:.

Use a secondary injection relay test set to operate the protection function. It is possible to use the BR to control the injected analogue quantities so that the fault only appears when the BR is picked up—simulating a closed breaker position.

To make the arrangement more elaborate, include the simulation of the operation gear condition, AR01-CBREADY, for the sequences Close-Open (CO) and Open-Close-Open (OCO).

The AR01-CBREADY condition at the CO sequence type is usually low for a recharging time of 5-10 s after a closing operation. Then it is high. The example shows that it is simulated with SRY, a manual switch.

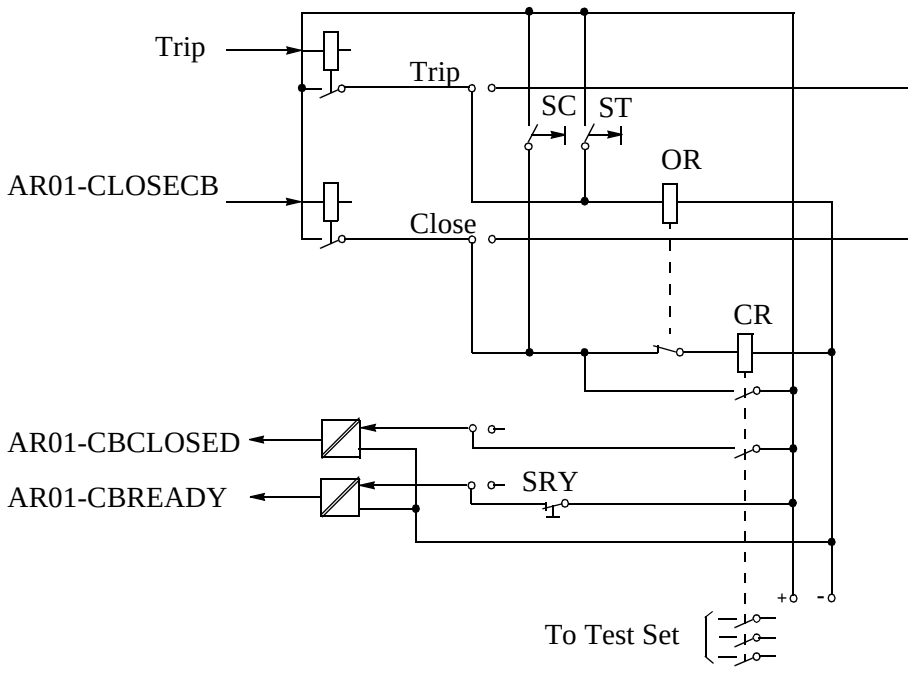

Figure 5: Simulating breaker operation with two auxiliary relays.

5.1 Suggested testing procedure

5.1.1 Preparations

1.1 Check the settings of the auto-reclosing (AR) function. The operation can be set at Stand-by (Off).

HMI tree:

Settings
Functions
Group n
AutoRecloser
AutoRecloser n

If any timer setting is changed so as to speed-up or facilitate the testing, they must be set to normal after the testing. A verification test has to be done afterwards.

1.2 Read and note the reclosing operate counters from the HMI tree:

ServiceReport
Functions
AutoRecloser
AutoRecloser n
Counters

1.3 Do the testing arrangements outlined above, for example, as in Figure 5:.

1.4 The AR01-CBCLOSED breaker position, the commands Trip and Closing, AR01-CLOSECB, and other signals should preferably be arranged for event recording provided with time measurements. Otherwise, a separate timer or recorder can be used to check the AR open time and other timers.

5.1.2 Check the AR functionality

2.1 Ensure that the voltage inputs to Synchro-check gives accepted conditions at open breaker (BR). They can, for example, be Live busbar and Dead line.

2.2 Set the operation at On.

2.3 Make a BR pickup by a closing pulse, the SC-pulse.

2.4 Close SRY, Breaker ready and leave it closed.

2.5 Inject AC quantities to give a trip and start AR.
Observe or record the BR operation. The BR relay should trip and reclose. After the closing operation, the SRY switch could be opened for about 5 s and then closed.
The AR open time and the operating sequence should be checked, for example, in the event recording.
Check the operate indications and the operate counters.

Should the operation not be as expected, the reason must be investigated. It could be due to an AR Off state or wrong program selection, or not accepted synchro-check conditions.

2.6 A few fault cases may be checked, for example, single-phase, two-phase and three-phase trips, transient, and permanent fault. The signal sequence diagrams in Figure 12: and fig12 can be of guidance for the checking.

5.1.3 Check the reclosing requirements

The number of cases can be varied according to the application. Examples of selection cases are:

3.1 Inhibit input signal: Check that the function is operative and that the breaker conditions are okay. Apply an AR01-INHIBIT input signal and start the reclosing function. *No reclosing!*

3.2 Breaker open, closing onto a fault: Set the breaker simulating relay, BR, in position open. Then close it with the SC switch and start the AR within one second. *No reclosing!*

3.3 Breaker not ready: Close the BR breaker relay and see that everything except for AR01-CBREADY is in normal condition (SRY is open). Start the AR function. *No reclosing!*

3.4 Lack of verification from synchro-check: Check the function at non-acceptable voltage conditions. Wait for the time out, >5 s. *No reclosing!*

3.5 Operation Stand-by and Off: Check that no reclosing can occur with the function in Off state.

3.6 Depending on the program selection and the selected fault types that start and inhibit reclosing, a check of no unwanted reclosing can be made. For example, if only single-phase reclosing is selected, a test can verify that there is no reclosing after two-phase and three-phase trips.

5.1.4 Test of Master-Slave

If a multi-breaker arrangement is used for the application and priorities are given for the master (high) and slave (low) terminals, test that correct operation takes place and that correct signals are issued. The signals WFMASTER, UNSUC, WAIT and INHIBIT should be involved.

5.1.5 Termination of the test

After the test, restore the equipment to normal or desired state.

Especially check these items:

4.1 Reclosing operate counters: Check and record the counter contents. (Reset if it is the user's preference.)

HMI tree:

ServiceReport
Functions
AutoRecloser
AutoRecloser n
Counters
Clear Counters

4.2 Setting parameters and the Operation parameter as required.

4.3 Test switch or disconnected links of connection terminals.

4.4 Normal indications.

(If so preferred, the disturbance report may be cleared.)

HMI tree:

DisturbReport
ClearDistRep

6 Appendix

6.1 Function block

AR01

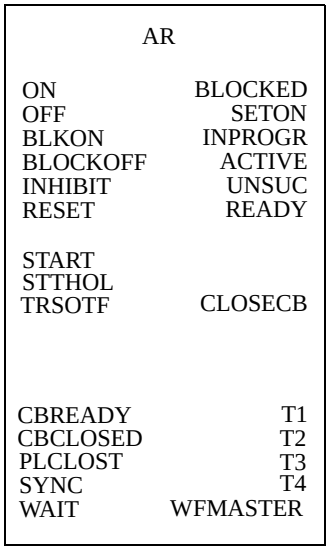

6.2 Function block diagrams

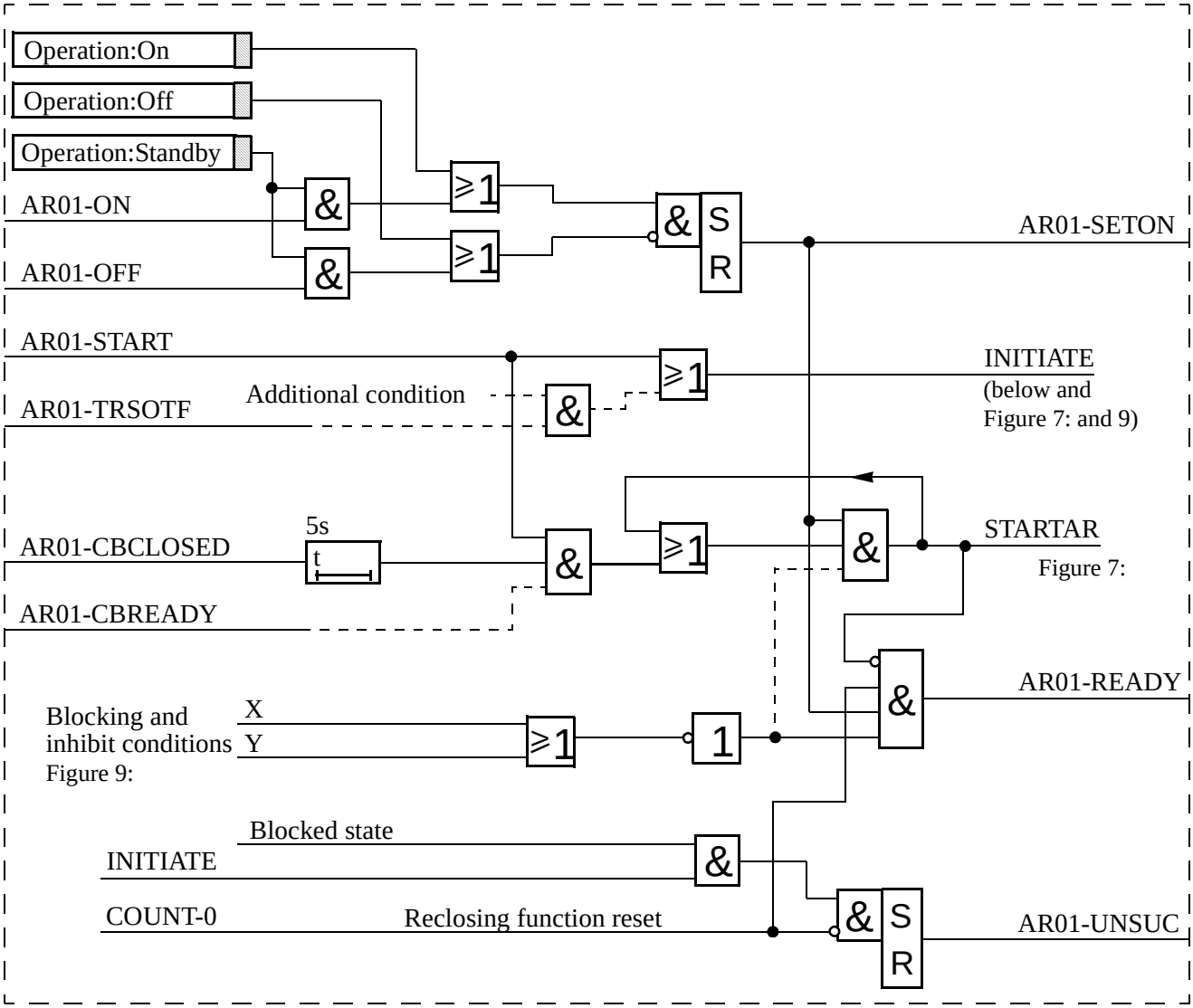

Figure 6: Auto-reclosing On/Off control and start. Simplified logic diagram.

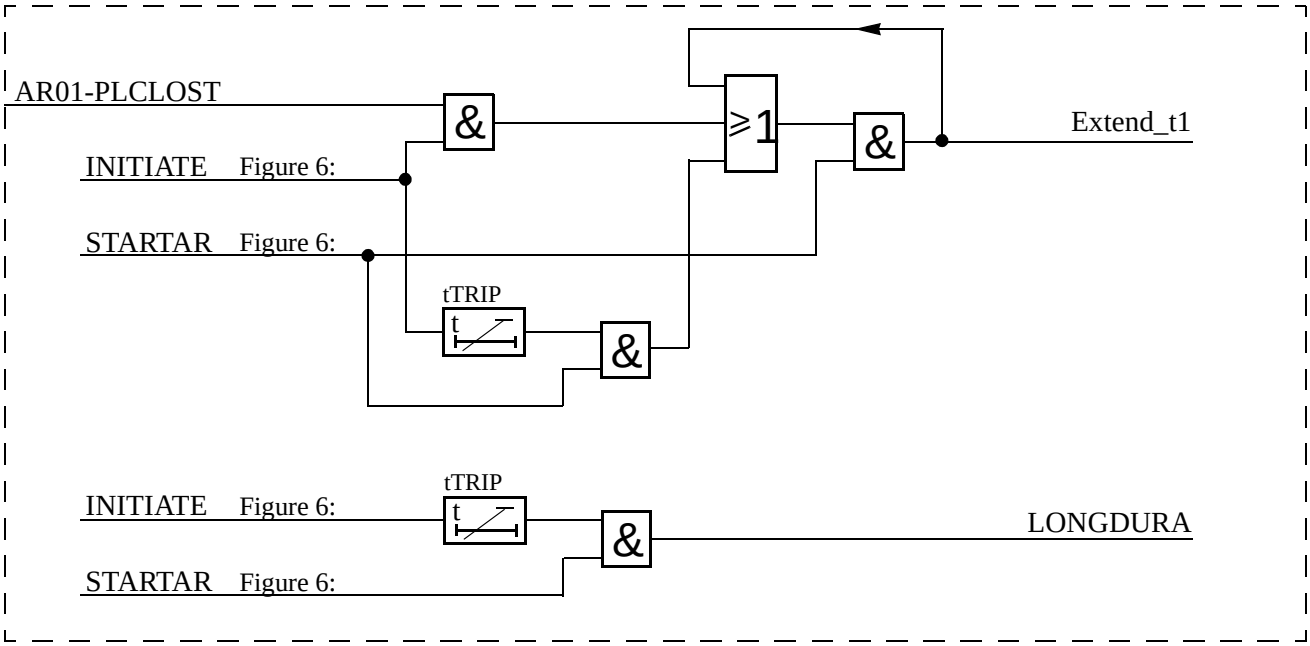

Figure 7: Control of extended “AR Open time, shot 1”. Simplified logic diagram.

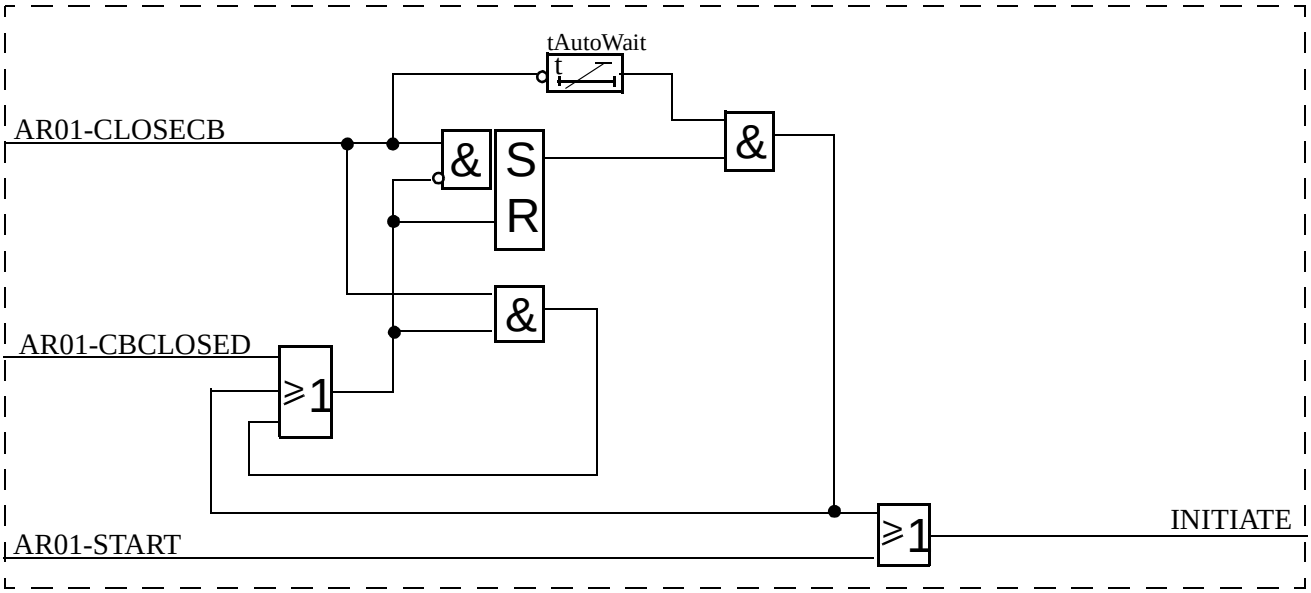

Figure 8: Automatic proceeding of shot two to four. Simplified logic diagram.

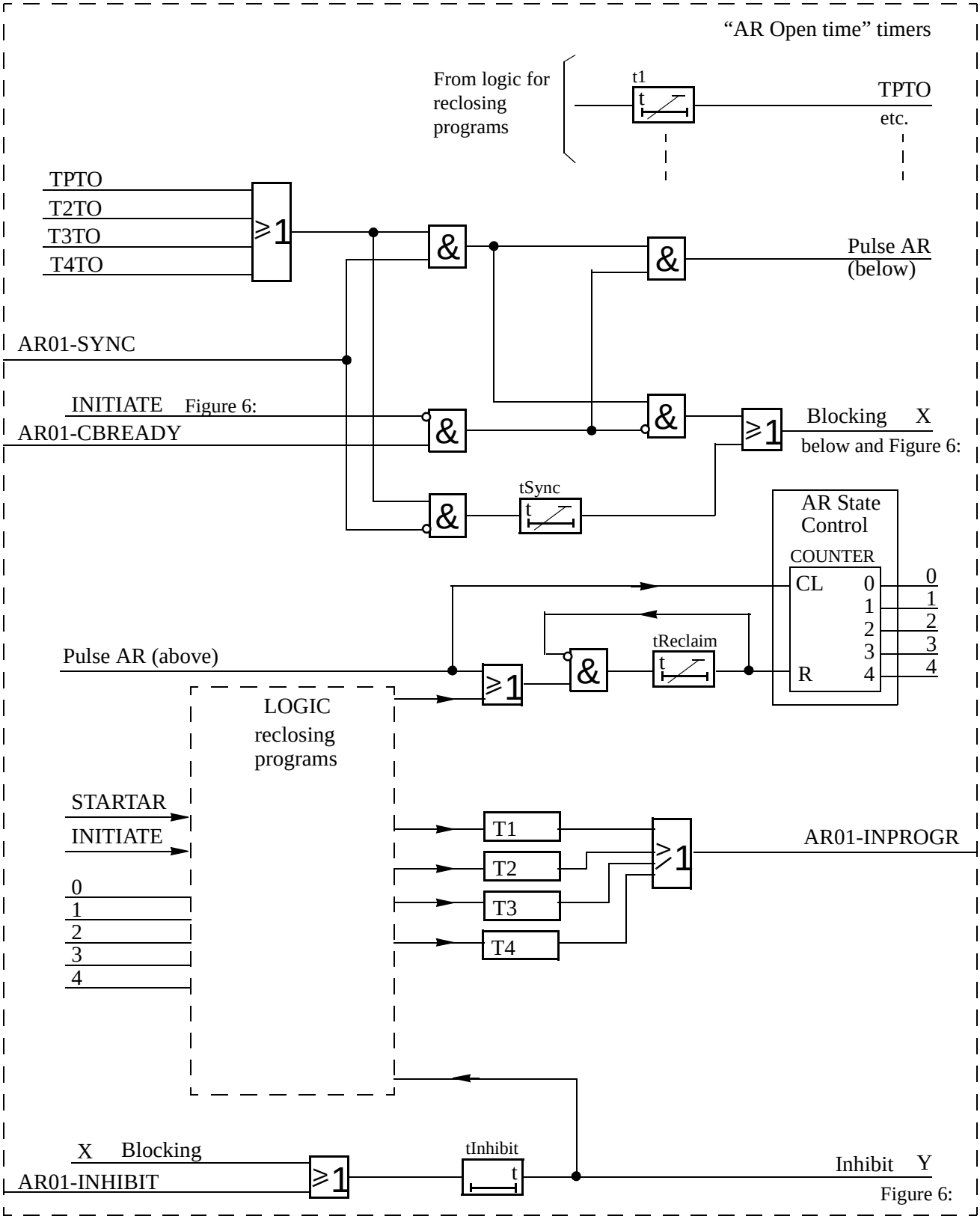

Figure 9: Reclosing checks and "Reclaim" and "Inhibit" timers. Simplified logic diagram.

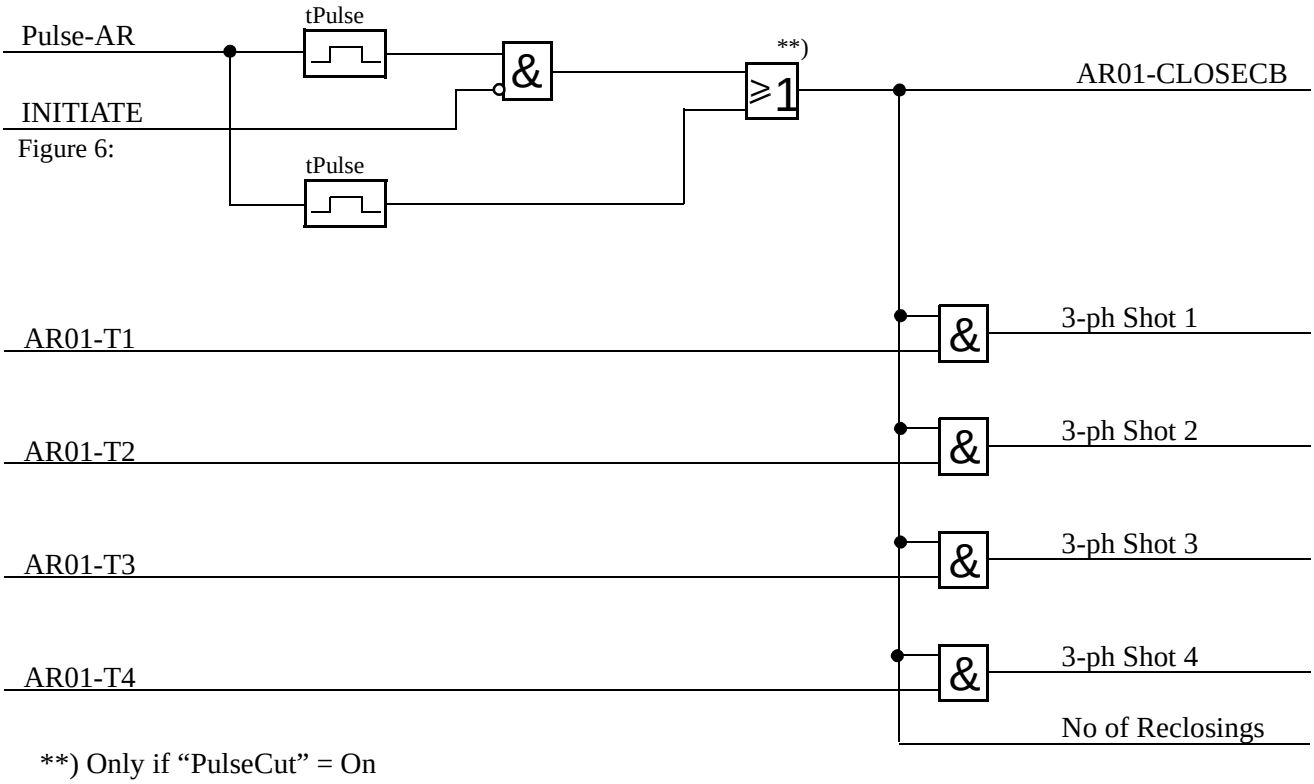

Figure 10: Pulsing of close command and driving of operation counters. Simplified logic diagram.

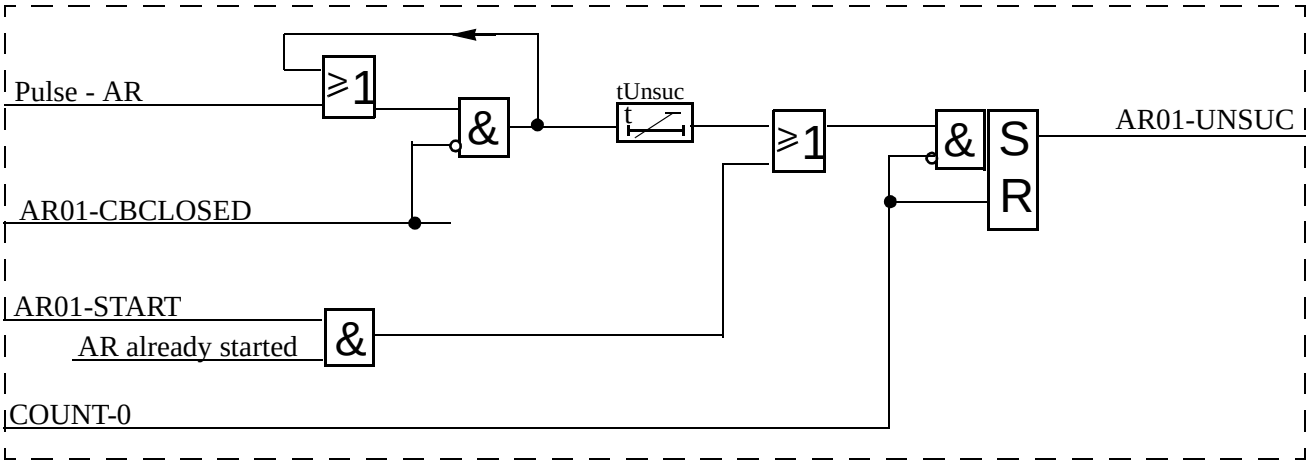

Figure 11: Issuing of the AR01-UNSUC signal. Simplified logic diagram.

6.3 Sequence examples

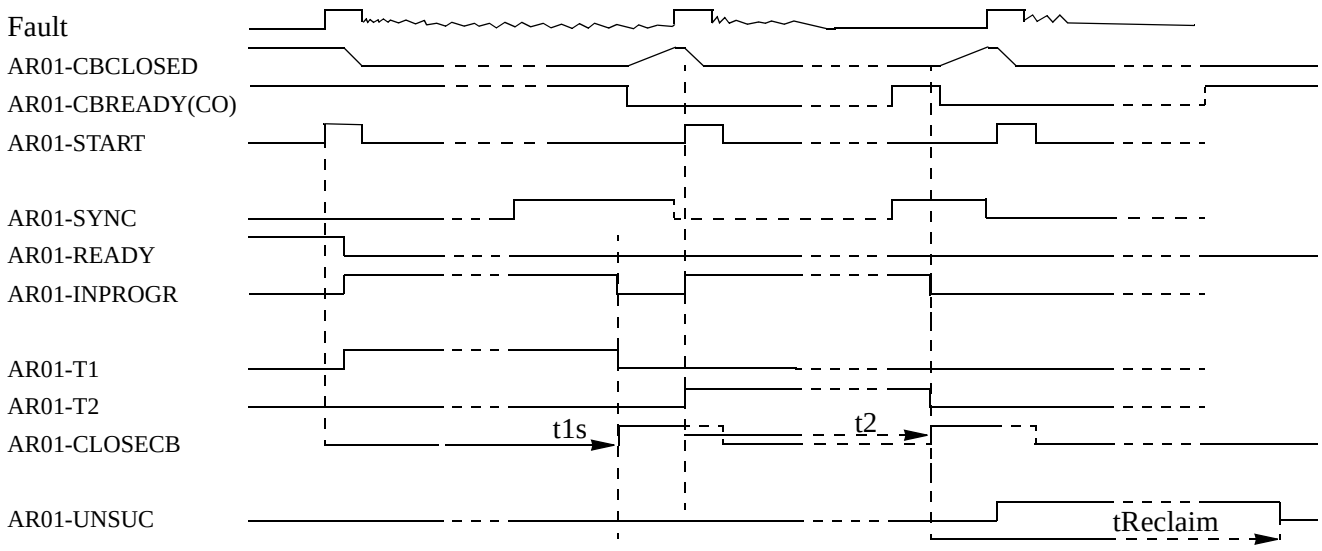

Figure 12: Example. Permanent three-phase fault, two-shot reclosing.

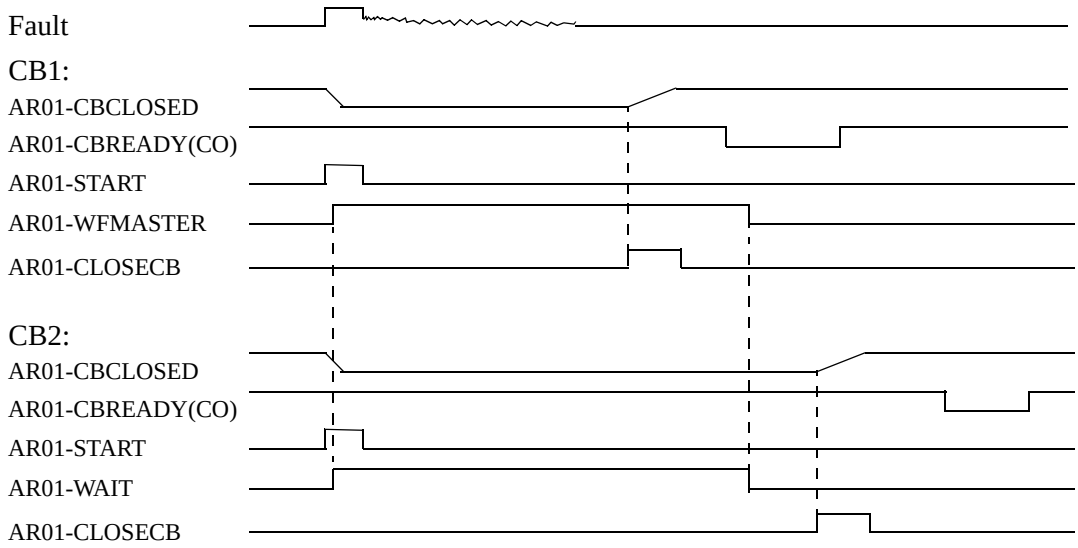

Figure 13: Sequential reclosing of two line breakers with priority.

6.4 Signal list

The signal list shows the input and output signals which can be interfaced with the auto-recloser 1. Data is same for other auto-recloser functions (2 to 6) with signal prefix AR02- to AR06-.

Table 1:

Block	Signal	Type	Description
AR01-	ON	IN	Enable auto-recloser operation
AR01-	OFF	IN	Disable auto-recloser operation
AR01-	BLKON	IN	Set auto-recloser in blocked state
AR01-	BLOCKOFF	IN	Release of auto-recloser in blocked state
AR01-	INHIBIT	IN	Inhibit auto-reclosing cycle
AR01-	RESET	IN	Resets auto-recloser
AR01-	START	IN	Start of auto-reclosing cycle
AR01-	STTHOL	IN	Start of thermal overload protection
AR01-	TRSOTF	IN	Start of auto-reclosing cycle from switch-onto-fault
AR01-	CBREADY	IN	Circuit breaker ready for operation
AR01-	CBCLOSED	IN	Circuit breaker closed
AR01-	PLCLOST	IN	Permissive communication channel out of service
AR01-	SYNC	IN	OK from external synchronising/energising unit
AR01-	WAIT	IN	Wait from master for sequential tripping
AR01-	BLOCKED	OUT	Auto-recloser in blocked state
AR01-	SETON	OUT	Auto-recloser switched on
AR01-	INPROGR	OUT	Auto-reclosing attempt in progress
AR01-	ACTIVE	OUT	Auto-reclosing cycle in progress
AR01-	UNSUC	OUT	Unsuccessful auto-reclosing
AR01-	READY	OUT	Auto-recloser prepared for reclose cycle
AR01-	CLOSECB	OUT	Closing command for circuit breaker
AR01-	T1	OUT	Three-phase reclosing, shot 1 in progress
AR01-	T2	OUT	Three-phase reclosing, shot 2 in progress
AR01-	T3	OUT	Three-phase reclosing, shot 3 in progress
AR01-	T4	OUT	Three-phase reclosing, shot 4 in progress
AR01-	WFMASTER	OUT	Wait from master for sequential tripping

6.5 Setting table

Parameter	Range	Unit	Default	Parameter description
Operation	Off, Stand-by, On		Off	Auto-recloser Off/Stand-by/On
NoOfRe-closing	1-4		1	Maximum number of reclosing attempts
Extended t1	Off, On		Off	Extended dead time for loss of permissive channel
t1	0.000-60.000	s	1.000	Open time for first auto-reclosing at three-phase
t2	0.0-9000.0	s	30.0	Open time for second auto-reclosing
t3	0.0-9000.0	s	30.0	Open time for third auto-reclosing
t4	0.0-9000.0	s	30.0	Open time for fourth auto-reclosing
tSync	0.0-9000.0	s	2.0	Auto-recloser maximum wait time for sync
tPulse	0.000-60.000	s	0.200	Circuit breaker closing pulse length
CutPulse	Off, On		Off	Shorten closing pulse at a new trip
tReclaim	0.0-9000.0	s	60.0	Auto-recloser reclaim time
tInhibit	0.000-60.000	a	5.000	Inhibit reset time
CB Ready	CO, OCO		CO	Select type of circuit breaker ready signal
tTrip	0.000-60.000	s	1.000	Block auto-reclosing for long trip duration
Priority	None, Low, High		None	Priority selection between adjacent terminals
tWaitFor-Master	0.0-9000.0	s	60.0	Maximum wait time for Master
AutoCont	Off, On		Off	Continue with next reclosing attempt if breaker not closes
BlockUnsuc	Off, On		Off	Block auto-recloser at unsuccessful auto-reclosing
tAutoWait	0.000-60.000	s	2.000	Maximum wait time between shots
UnsucMode	NoCBCheck, CBCheck		NOCB-Check	Unsuccessful-signal mode
tUnsuc	0.0-9000.0	s	30	CB Check time before unsuc

1 Application

The tripping logic in REx 5xx protection, control and monitoring terminals offers three different operating modes:

- Three-phase tripping for all kinds of faults (3ph operating mode)
- Single-phase tripping for single-phase faults and three-phase tripping for multi-phase and evolving faults (1ph/3ph operating mode). The logic also issues a three-phase tripping command when phase selection within the operating protection functions is not possible, or when external conditions request three-phase tripping.
- Single-phase tripping for single-phase faults, two-phase tripping for ph-ph and ph-ph-E faults and three-phase tripping for three-phase faults (1ph/2ph/3ph operating mode). The logic also issues a three-phase tripping command when phase selection within the operating protection functions is not possible or at evolving multi-phase faults.

2 Design

The function consists of the following basic logic parts:

- A three-phase front logic that is activated when the terminal is set into exclusive three-phase operating mode.
- A phase segregated front logic that is activated when the terminal is in 1ph/3ph or 1ph/2ph/3ph operating mode.
- An additional logic for evolving faults and three-phase tripping when the function operates in 1ph/3ph operating mode
- An additional logic for evolving faults and three-phase tripping when the function operates in 1ph/2ph/3ph operating mode.
- The final tripping circuits.

2.1 Three-phase front logic

Figure 1: shows a simplified block diagram of a three-phase front logic. Descriptions of different signals is available in signal list.

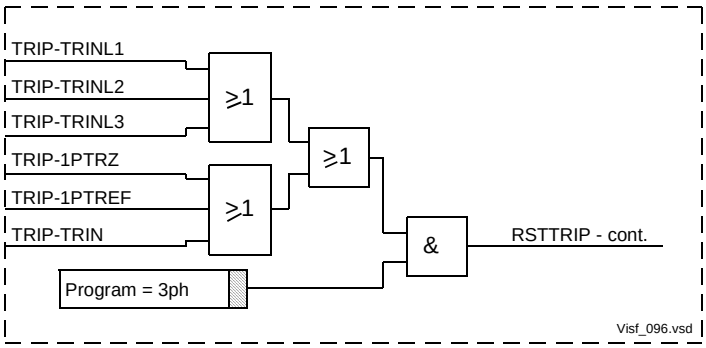

Figure 1: Three-phase front logic - simplified logic diagram

Any of active functional input signals activates the RSTTRIP internal signal, which influences the operation of the final tripping circuits.

2.2 Phase segregated front logic

The following input signals to the single-phase front logic influence the single-phase tripping of the terminal (see Figure 2:):

- Phase related tripping signals from different built-in protection functions that can operate on a phase segregated basis and are used in the terminal. The output signals of these functions should be configured to the TRIP-TRINLn (n = 1...3) functional inputs.
- Internal phase-selective tripping signals from different phase selection functions within the terminal, like PHS (phase selection for distance protection) or GFC (general fault criteria). The output signals of these functions should be configured to the TRIP-PSLn (n = 1...3) functional inputs. It is also possible to connect to these functional inputs different external phase selection signals.
- Single-phase tripping commands from line distance protection or carrier aided tripping commands from scheme communication logic for distance protection, which initiate single-phase tripping. These signals should be configured to the TRIP-1PTRZ functional input. It is also possible to configure a tripping output from an earth-fault overcurrent protection, to initiate the single-pole trip in connection with some external phase selection function. This signal should be configured to the TRIP-1PTREF functional input.

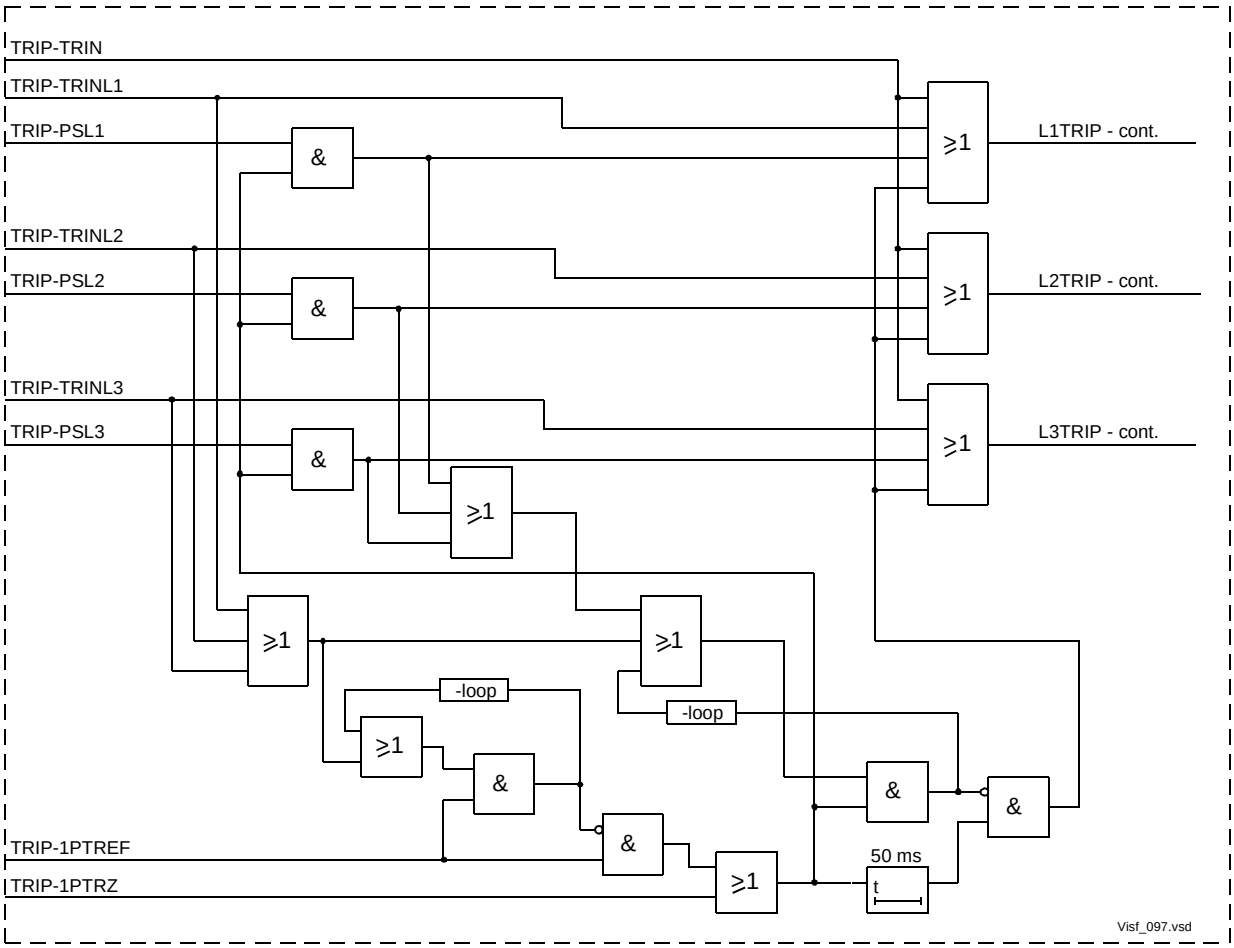

Figure 2: Phase segregated front logic

The TRIP-1PTRZ signal enables tripping corresponding to phase selection signals without any restriction while any phase selective external tripping signals prevent such tripping from the TRIP-1PTREF signal.

If any of these signals continues for more than 50 ms without the presence of any phase selection signals, three-phase tripping command is issued.

It is possible to configure the TRIP-1PTREF signal to the output signal of the EF---TRIP overcurrent, earth-fault, protection function (directional and nondirectional). This enables single-phase tripping when the faulty phase is detected by some other phase-selection element such as the phase selection in distance protection.

2.3 Additional logic for 1ph/3ph operating mode

Figure 3: presents the additional logic when the trip function is in 1ph/3ph operating mode. A TRIP-P3PTR functional input signal activates a three pole tripping if at least one phase within the front logic initiates a trip command.

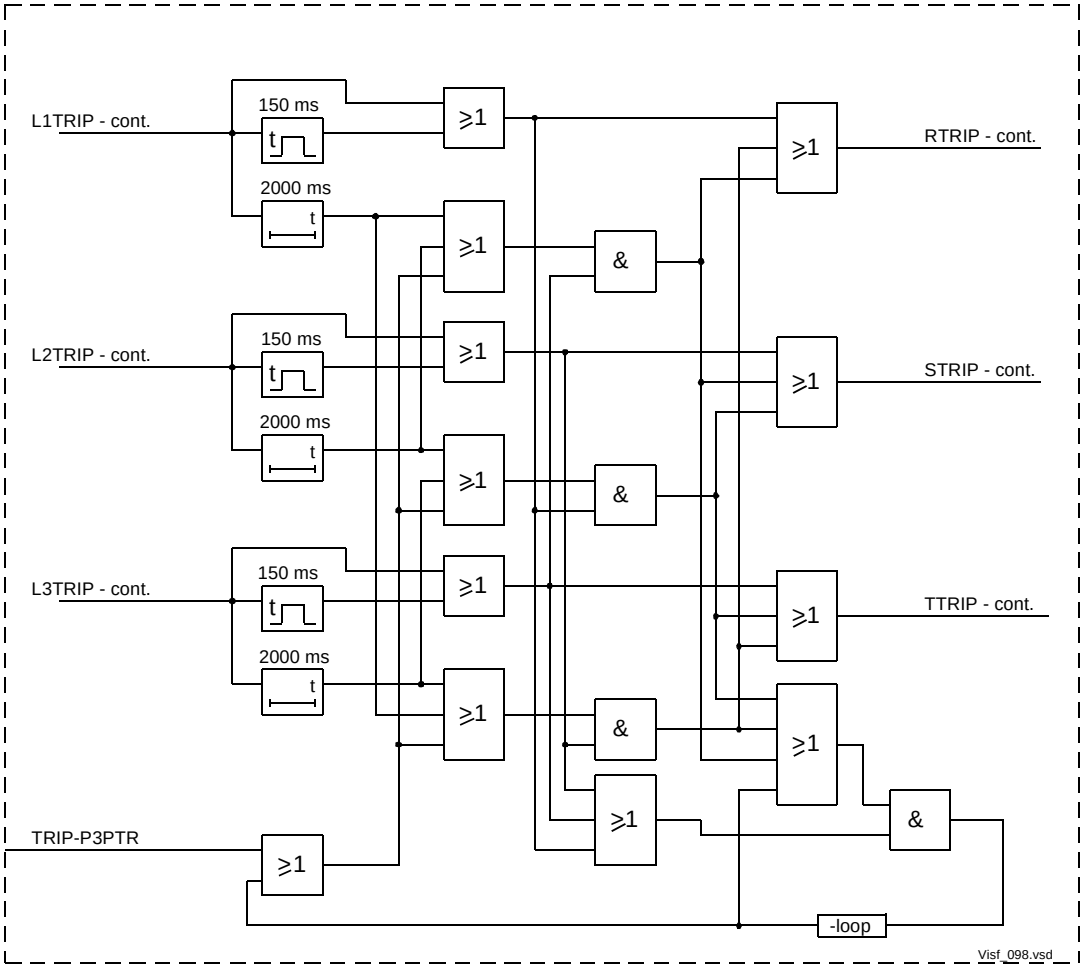

Figure 3: Additional logic for the 1ph/3ph operating mode

If only one of internal signals LnTRIP is present without the presence of a TRIP-P3PTR signal, a single pole tripping information is send to the final tripping circuits. A three-phase tripping command is initiated in all other cases.

Built-in drop-off delayed (two second) timers secure a three-phase tripping for evolving faults if the second fault occurs in different phase than the first one within a two second interval after initiation of a first tripping command.

2.4 Additional logic for 1ph/2ph/3ph operating mode

Figure 4: presents the additional logic, when the trip function is in 1ph/2ph/3ph operating mode. A TRIP-P3PTR functional input signal activates a three pole tripping if at least one phase within the front logic initiates a trip command.

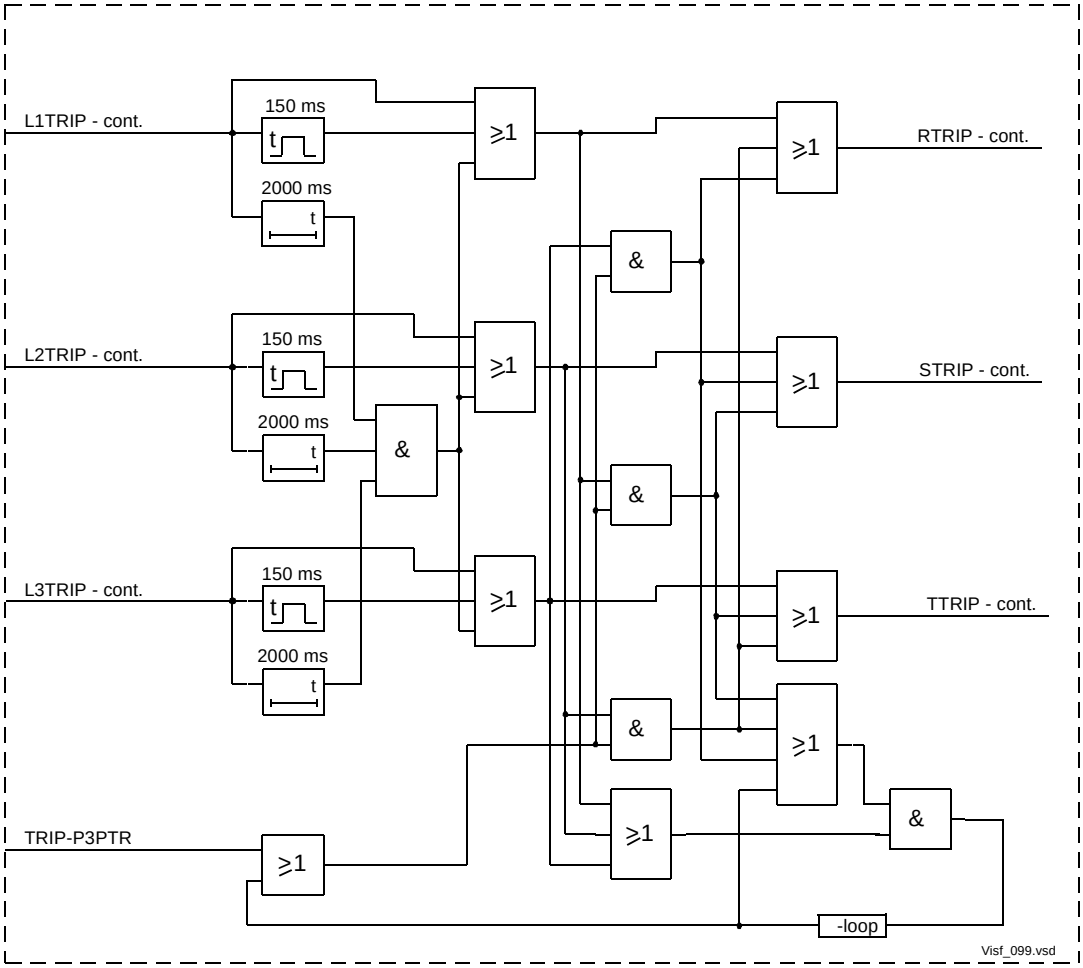

Figure 4: Additional logic for the 1ph/2ph/3ph operating mode

The logic initiates a single-phase tripping information to the final logic circuits, if only one of internal input signals (LnTRIP) is active. A two phase tripping information is send in case, when two out of three input signals LnTRIP are active. A three phase tripping information requires all three LnTRIP input signals to be active.

The built in drop-off delayed (two seconds) timers secure correct three-phase tripping information, when the faults are detected within two seconds in all three phases.

2.5 Final tripping circuits

Figure 5: present the final tripping circuits for a tripping function within the REx 5xx terminals. The TRIP-BLOCK functional input signal can block the operation of a function, so that no functional output signals become logical one. Detailed explanation of functional output signals is available in signal list.

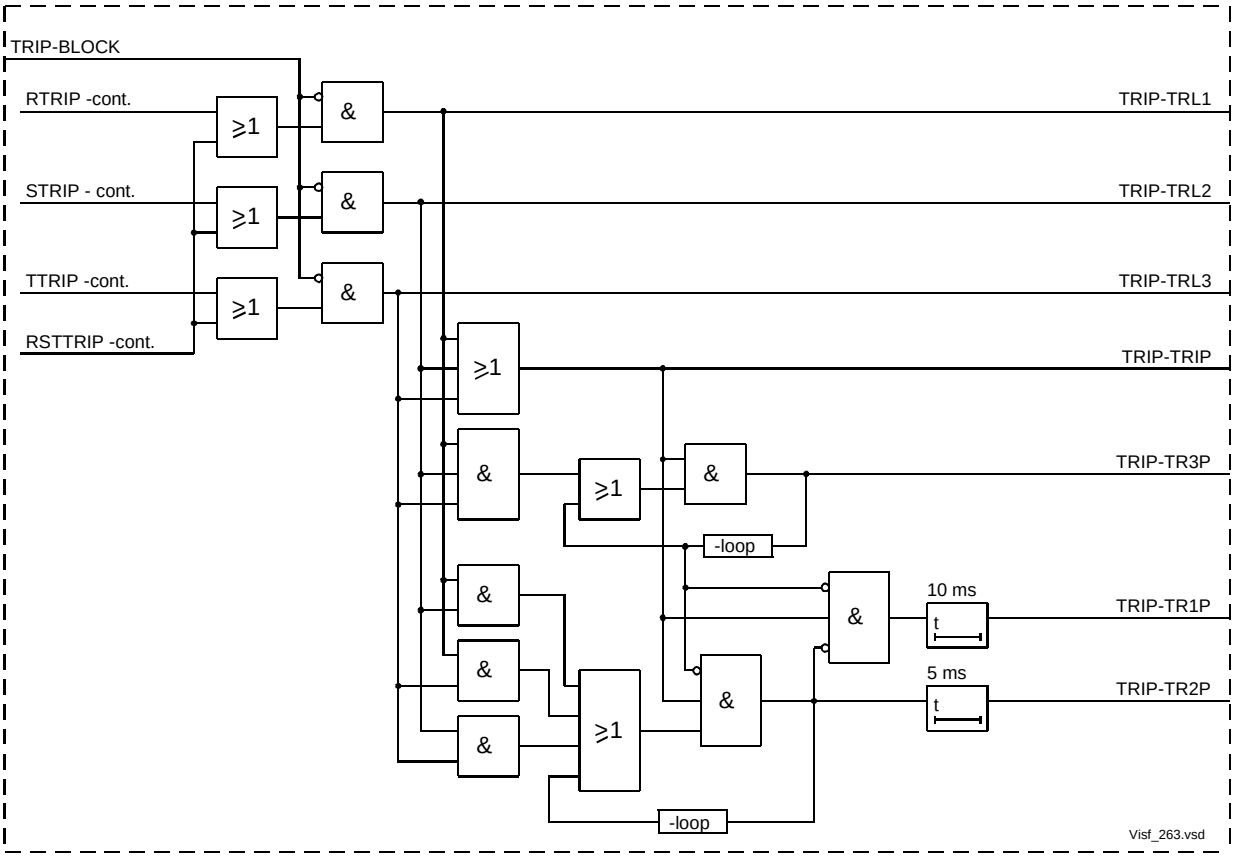

Figure 5: Final tripping circuits

3 Testing

The function can be disabled during the testing mode under these conditions:

- When the function is selected to be blocked under the testing conditions, select the functions, which should be blocked under the submenu:

  Test
  TestMode
  BlockFunctions

- Set the Operation parameter to On (Operation=On) to set the terminal in to testing mode. Select the operating mode under this submenu:

  Test
  TestMode
  Operation

- The terminal is switched to testing mode when the logical 1 is specified for the TEST-INPUT functional input.

Note: The function is blocked if the corresponding setting under the **BlockFunctions** submenu remains on and the TEST-INPUT signal remains active.

The function is tested functionally together with other protection functions (distance protection ZMn--, line differential protection DIFL-, earth-fault overcurrent protection IOC-- or TOC--, etc.) within the REx 5xx terminals. It is recommended to test the function together with the autoreclosing function, when built into the terminal or when a separate external unit is used for the reclosing purposes.

3.1 3ph operating mode

The function must issue a three-phase tripping in all cases, when tripping is initiated by any protection or some other built-in or external function. The following functional output signals must always appear simultaneously: TRIP-TRIP, TRIP-TRL1, TRIP-TRL2, TRIP-TRL3 and TRIP-TR3P.

3.2 1ph/3ph operating mode

The following tests should be carried out in addition to some other tests, which depends on the complete configuration of a terminal:

1.) Initiate one-by one different single-phase-to-earth faults. Consider sufficient time interval between the faults, to overcome a reclaim time of eventually activated autoreclosing function. Only a single-phase trip should occur for each separate fault and only one of the tripping outputs (TRIP-TRLn) should be activated at a time. Functional outputs TRIP-TRIP and TRIP-TR1P should be active at each fault. No other outputs should be active.

2.) Initiate different phase-to-phase and three-phase faults. Consider sufficient time interval between the faults, to overcome a reclaim time of eventually activated autoreclosing function. Only a three-phase trip should occur for each separate fault and all of the tripping outputs (TRIP-TRLn) should be activated at a time. Functional outputs TRIP-TRIP and TRIP-TR3P should be active at each fault. No other outputs should be active.

3.) Initiate a single-phase-to-earth fault and switch it off immediately when the tripping signal is issued for the corresponding phase. Initiate the same fault once again within the reclaim time of the used autoreclosing function. A three-phase tripping must be initiated for the second fault. Check that the corresponding tripping signals appear after both faults. If not the autoreclosing function is used the functional outputs TRIP-TRIP, TRIP-TR1P and the corresponding phase signal (TRIP-TRLn) should be active at each fault.

4.) Initiate a single-phase-to-earth fault and switch it off immediately when the tripping signal is issued for the corresponding phase. Initiate the second single-phase-to-earth fault in one of the remaining phases within the time interval, shorter than two seconds and shorter than the dead-time of the autoreclosing function, when included in protection scheme. Check that the second trip is a three-phase trip.

3.3 1ph/2ph/3ph operating mode

The following tests should be carried out in addition to some other tests, which depends on the complete configuration of a terminal:

1.) Initiate one-by one different single-phase-to-earth faults. Consider sufficient time interval between the faults, to overcome a reclaim time of eventually activated autoreclosing function. Only a single-phase trip should occur for each separate fault and only one of the tripping outputs (TRIP-TRLn) should be activated at a time. Functional outputs TRIP-TRIP and TRIP-TR1P should be active at each fault. No other outputs should be active.

2.) Initiate one-by one different phase-to-phase faults. Consider sufficient time interval between the faults, to overcome a reclaim time of eventually activated autoreclosing function. Only a two-phase trip should occur for each separate fault and only corresponding two tripping outputs (TRIP-TRLn) should be activated at a time. Functional outputs TRIP-TRIP and TRIP-TR2P should be active at each fault. No other outputs should be active.

3.) Initiate a three-phase fault. Consider sufficient time interval between the faults, to overcome a reclaim time of eventually activated autoreclosing function. Only a three-phase trip should occur for the fault and all tripping outputs (TRIP-TRLn) should be activated at the same time. Functional outputs TRIP-TRIP and TRIP-TR3P should be active at each fault. No other outputs should be active.

4.) Initiate a single-phase-to-earth fault and switch it off immediately when the tripping signal is issued for the corresponding phase. Initiate the same fault once again within the reclaim time of the used autoreclosing function. A three-phase tripping must be initiated for

the second fault. Check that the corresponding tripping signals appear after both faults. If not the autoreclosing function is used the functional outputs TRIP-TRIP, TRIP-TR1P and the corresponding phase signal (TRIP-TRLn) should be active at each fault.

5.) Initiate a single-phase-to-earth fault and switch it off immediately when the tripping signal is issued for the corresponding phase. Initiate the second single-phase-to-earth fault in one of the remaining phases within the time interval, shorter than two seconds and shorter than the dead-time of the autoreclosing function, when included in protection scheme. Check that the second trip is a single-phase trip in a second initiated phase.

6.) Initiate a phase-to-phase fault and switch it off immediately when the tripping signal is issued for the corresponding two phases. Initiate another phase-to-phase fault (not between the same phases) within the time, shorter than 2 seconds. Check, that the output signals, issued for the first fault, correspond to two-phase tripping for included phases. The output signals for the second fault must correspond to the three-phase tripping action.

4 Appendix

4.1 Function block

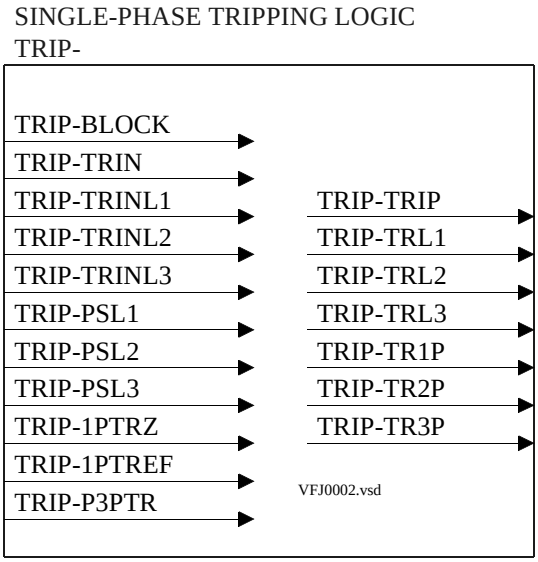

4.2 Signal list

Block:	Signal:	Type	Description:
TRIP-	TRIP	OUT	General trip output signal
TRIP-	TRL1	OUT	Trip output signal in phase L1
TRIP-	TRL2	OUT	Trip output signal in phase L2
TRIP-	TRL3	OUT	Trip output signal in phase L3

Block:	Signal:	Type	Description:
TRIP-	TR1P	OUT	Single pole tripping
TRIP-	TR2P	OUT	Two pole tripping
TRIP-	TR3P	OUT	Three pole tripping
TRIP-	BLOCK	IN	Block of Trip
TRIP-	TRIN	IN	Trip all phases
TRIP-	TRINL1	IN	Trip phase L1
TRIP-	TRINL2	IN	Trip phase L2
TRIP-	TRINL3	IN	Trip phase L3
TRIP-	PSL1	IN	Functional input for phase selection in phase L1
TRIP-	PSL2	IN	Functional input for phase selection in phase L2
TRIP-	PSL3	IN	Functional input for phase selection in phase L3
TRIP-	1PTRZ	IN	Functional input for impedance single pole trip
TRIP-	1PTREF	IN	Functional input for earth fault single pole trip
TRIP-	P3PTR	IN	Functional input for preparing for three phase trip

4.3 Setting table

Parameter:	Range:	Unit:	Default:	Parameter description:
Operation	Off / On	-	Off	Operation of trip logic
Program	3ph - 1/3ph - 1/2/3ph	-	3ph	Operating mode of trip logic

5 Application

The serial communication can be used for different purposes, which enable better access to the information stored in the terminals. The serial communication is also used for communication directly between terminals (bay-to-bay communication).

The serial communication can be used with a station monitoring system (SMS), via a substation automation system (SCS) or a SCADA system. Normally, SPA communication is used for SMS and SCS; LON communication is used for SCS. SPA communication is also applied when using the front communication port, but for this purpose, no special serial communication function is required in the terminal. Only the software in the PC and a special cable for front connection is needed.

As an alternative to the rear SPA communication port, a port intended for the IEC 870-5-103 is available. IEC 870-5-103 is a standard protocol for protection functions.

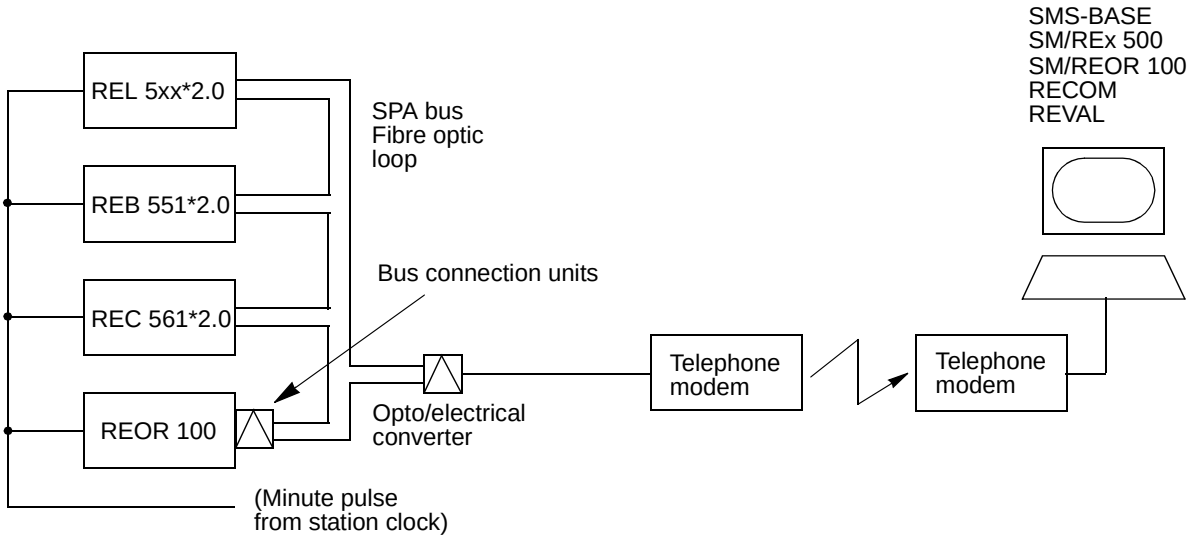

Figure 6: Example of SPA communication structure for a station monitoring system

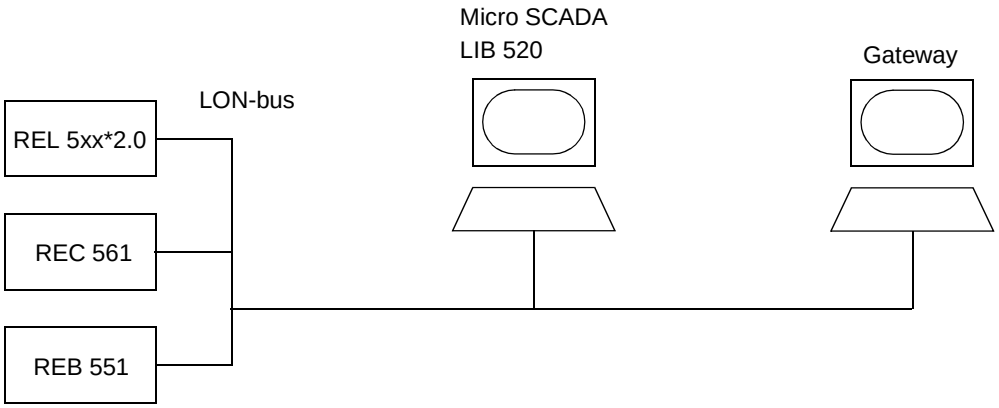

Figure 7: Example of LON communication structure for substation automation

6 Theory of operation

All serial communication to and from the terminal (including the front PC port communication) uses either the SPA-bus V 2.4 protocol, IEC 870-5-103 or the LonTalk protocol.

6.1 SPA operation

The SPA protocol is an ASCII-based protocol for serial communication. The communication is based on a master-slave principle, where the terminal is a slave, and the PC is the master. Only one master can be applied on each fibre optic loop. A program is needed in the master computer for interpretation of the SPA-bus codes, and for translation of the settings sent to the terminal. This program is called SMS-BASE with the SM/REx 500-module.

6.2 LON operation

The LON protocol is specified in the *LonTalkProtocol Specification Version 3* from Echelon Corporation. This protocol is designed for communication in control networks and is a peer-to-peer protocol where all the devices connected to the network can communicate with each other directly. For more information of the bay-to-bay communication, refer to the documents *Event function* and *Binary signal interbay communication*.

6.3 IEC 870-5-103 operation

The IEC 870-5-103 is an unbalanced (master-slave) protocol for coded-bit serial communication exchanging information with a control system. In IEC terminology a primary station is a master and a secondary station is a slave. The communication is based on a point to point principle. The master must have a program that can interpret the IEC 870-5-103 communication messages. For detailed information about IEC 870-5-103, refer to the part 5: Transmission protocols, and to the section 103: Companion standard for the informative interface of protection equipment, in the IEC 870 standard.

7 Design

The serial communication use optical fibres for transfer of data within a station. For this purpose, a fibre optic bus input can be available on the rear of the terminal, one for LON communication, and one for SPA or IEC communication. The principle of two independent communication ports is used.

7.1 SPA design

When communicating locally with a Personal Computer (PC) in the station, using the rear SPA port, the only hardware needed for a station monitoring system is:

- Optical fibres
- Opto/electrical converter for the PC
- PC

When communicating remotely with a PC using the rear SPA port, the same hardware is needed plus telephone modems.

The software needed in the PC, either local or remote, is:

- SMS-BASE (Ver. 2.0 or higher)
- SM/REx 500 for terminals ver. 2.0
- RECOM (Ver 1.3 or higher) if disturbance recorder data is transferred to a PC
- REVAL (Ver 1.1 or higher) for evaluation of this disturbance recorder data

When communicating to a front-connected PC, the only hardware required is the special front-connection cable. The software needed in a front connected PC is:

- SMS-BASE (Ver 2.0 or higher)
- SM/REx 500 for terminals ver. 2.0. The SM/REx 500 includes one small part of RECOM, which lets you collect disturbance recorder data via the front port.
- REVAL (Ver 1.1 or higher) is also required if the same PC is used for evaluation of the disturbance recorder data.

7.2 LON design

The hardware needed for applying LON communication depends on the application, but one very central unit needed is the LON Star Coupler and optic fibres connecting the star coupler to the terminals. To communicate with the terminals from MicroSCADA, the application library LIB 520 is needed.

The HV/Control and the HV/REx 500 software modules are included in the LIB 520 high-voltage process package, which is a part of the Application Software Library within MicroSCADA applications.

The HV/Control software module is intended to be used for control functions in REx 5xx terminals. This module contains the process picture, dialogues and process database for the control application in the MicroSCADA.

The HV/REx 500 software module is used to present Station Monitoring information on the MicroSCADA screen.

7.3 IEC 870-5-103 design

7.3.1 General

The protocol implementation in REx 5xx consists of these functions:

- Event handling
- Report of analog service values (measurands)
- Fault location
- Command handling
  - Autorecloser ON/OFF
  - Teleprotection ON/OFF
  - Protection ON/OFF
  - LED reset
  - Characteristics 1 - 4 (Setting groups)
- File transfer (disturbance files)
- Time synchronisation

7.3.2 Hardware

When communicating locally with a Personal Computer (PC) or a Remote Terminal Unit (RTU) in the station, using the IEC port, the only hardware needed is:

- Optical fibres, glass/plastic
- Opto/electrical converter for the PC/RTU
- PC/RTU

7.3.3 Events

The events created in the terminal available for the IEC 870-5-103 protocol are based on the event function EV01 - EV06 available in the terminal. These event function blocks include the function type and the information number for each event input, which can be found in the IEC-document. See also document *Event function.*

7.3.4 Measurands

The measurands can be included as type 3.1, 3.2, 3.3, 3.4 and type 9 according to the standard.

7.3.5 Fault location

The fault location is expressed in reactive ohms. In relation to the line length in reactive ohms, it gives the fault distance in percent. The data is available and reported when the fault locator function is included in the terminal.

7.3.6 Commands

The commands defined in the IEC 870-5-103 protocol are represented in a dedicated function block. This block has output signals according to the protocol for all commands. The function block for the IEC commands can be found in the appendix.

7.3.7 File transfer

As for file transfer functionality it is based on the *Disturbance recorder function*. The analog and binary signals recorded will be reported to the master. The eight last disturbances that is recorded is available for transfer to the master. Though a file is transferred and acknowledged by the master it cannot be transferred again.

The analog channels that are reported are the first four current inputs and the first four voltage inputs.

8 Setting

The SPA and the IEC use the same rear communication port. To define the protocol to be used, a setting is done on the local HMI under the menu:

Configuration
TerminalCom
SPA-IECPort

When the type of communication protocol is defined, the power to the terminal has to be switched off and on.

8.1 SPA setting

The most important settings in the terminal for SPA communication are the slave number and baud rate (communication speed). These settings are absolutely essential for all communication contact to the terminal.

These settings can **only** be done on the local HMI for rear channel communication at:

Configuration
TerminalCom
SPAComm
Rear

and for front connection at:

Configuration
TerminalCom
SPAComm
Front

The slave number can be set to any value from 1 to 899, as long as the slave number is unique within the used SPA loop.

The baud rate, which is the communication speed, can be set to between 300 and 38400 bits/s. The baud rate should be the same for the whole station, although different baud rates in a loop are possible. If different baud rates in the same fibre optical loop are used, consider this when making the communication setup in the communication master, the PC. The maximum baud rate of the front connection is limited to 9600 bit/s.

For local communication, 19200 or 38400 bit/s is the normal setting. If telephone communication is used, the communication speed depends on the quality of the connection and on the type of modem used. But remember that the terminal does not adapt its speed to the actual communication conditions, because the speed is set on the HMI of the terminal.

8.2 LON setting

Use the LNT, LON Network Tool to set the LON communication. This is a software tool applied as one node on the LON bus. In order to communicate via LON, the terminals need to know which node addresses the other connected terminals have, and which network variable selectors should be used. This is organised by the LNT.

The node address is transferred to the LNT via the local HMI at:

Configuration
TerminalCom
LONComm
ServicePinMsg

By setting YES, the node address is sent to the LNT via the LON bus. Or, the LNT can scan the network for new nodes.

The speed of the LON bus is set to the default of 1.25 MHz. This can be changed by the LNT.

If the LON communication from the terminal stops, caused by setting of illegal communication parameters (outside the setting range) or by another disturbance, it is possible to reset the LON port of the terminal. This is performed at the local HMI at:

Configuration
TerminalCom
LONComm
LONDefault

By setting YES, the LON communication is reset in the terminal, and the addressing procedure can start from the beginning again.

There are a number of session timers which can be set via the local HMI. These settings are only for advanced use and should only be changed after recommendation from ABB Network Partner AB. The time values below are the default settings. The settings can be found at:

Configuration
TerminalCom
LONComm
SessionTimers

8.3 IEC 870-5-103 setting

8.3.1 Settings from the local HMI

The settings for IEC 870-5-103 communication are the following:

- Individually blocking of commands
- Setting of measurand type
- Setting of main function type and activation of main function type
- Settings for slave number and baud rate (communication speed)
- Command for giving Block of information command

The settings for individually blocking of commands can be found on the local HMI at:

Configuration
TerminalCom
IECCom
Commands

Each command has its own blocking setting and the state can be set to OFF or ON. The OFF state corresponds to non-blocked state and ON corresponds to blocked state.

The settings for type of measurand can be found on the local HMI at:

Configuration
TerminalCom
IECCom
Measurands

The type of measurands can be set to report standardised types, Type 3.1, Type 3.2, Type 3.3, Type 3.4 or Type 9.

The use of main function type is to facilitate the engineering work of the terminal. The settings for main function type and the activation of main function type can be found on the local HMI at:

Configuration
TerminalCom
IECCom
FunctionType

The main function type can be set to values according to the standard, this is, between 1 and 255. The value zero is used as default and corresponds to not used.

The setting for activation of main function type can be set to OFF or ON. The OFF state corresponds to non-activated state and ON corresponds to activated state. Upon activated the main function type overrides all other settings for function type within the terminal, that is, function type settings for event function and disturbance recorder function. When set to OFF, function type settings for event function and disturbance recorder function use their own function type settings made on the function blocks for the event function and disturbance recorder respectively. Though for all other functions they use the main function type even when set to OFF.

The settings for communication parameters slave number and baud rate can be found on the local HMI at:

Configuration
TerminalCom
IECCom
Communication

The slave number can be set to any value between 0 to 255.

The baud rate, the communication speed, can be set either to 9600 bits/s or 19200 bits/s.

The settings for issuing a block-of-information command can be found on the local HMI at:

Configuration
TerminalCom
IECCom
BlockOfInfo

Issuing the BlockOfInformation command with the value *one (1)* blocks all information sent to the master and abort any GI procedure or any file transfer in process. Thus issuing the command with the value set to *zero (0)* will allow information to be polled by the master.

The dialogue to operate the output from the BlockOfInformation command function is performed from different state as follows:

1. Selection active; select the:
   - C button, and then the No box activates.
   - Up arrow, and then New: 0 changes to New: 1. The up arrow changes to the down arrow.
   - E button, and then the Yes box activates.

2. Yes box active; select the:
   - C button to cancel the action and return to the BlockOfInfo window.
   - E button to confirm the action and return to the BlockOfInfo window.
   - Right arrow to activate the No box.

3. No box active; select the:
   - C button to cancel the action and return to the BlockOfInfo window.
   - E button to confirm the action and return to the BlockOfInfo window.
   - Left arrow to activate the Yes box.

8.3.2 Settings from the CAP 531 tool

8.3.2.1 Event

For each input of the *Event function* there is a setting for the information number of the connected signal. The information number can be set to any value between 0 and 255. In order to get proper operation of the sequence of events the event masks in the event function shall be set to ON_CHANGE. For single-command signals, the event mask shall be set to ON_SET.

In addition there is a setting on each event block for function type. Refer to description of the Main Function type set on the local HMI.

8.3.2.2 Commands

As for the commands defined in the protocol there is a dedicated function block with eight output signals. The configuration of these signals are made by using the CAP 531 tool.

To realise the BlockOfInformation command, which is operated from the local HMI, the output BLKINFO on the IEC command function block ICOM has to be connected to an input on an event function block. This input shall have the information number 20 (monitor direction blocked) according to the standard.

8.3.2.3 File transfer

For each input of the *Disturbance recorder function* there is a setting for the information number of the connected signal. The information number can be set to any value between 0 and 255.

Furthermore there is a setting on each input of the *Disturbance recorder function* for the function type. Refer to description of Main Function type set on the local HMI.

9 Appendix

9.1 Function block

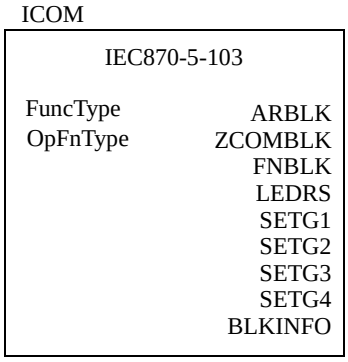

9.2 Signal list

Block	Signal	Type	Description
ICOM-	ARBLK	OUT	Output from ARBLK command, to be used for switching autorecloser on/off.
ICOM-	FNBLK	OUT	Output from FNBLK command, to be used for switching protection on/off.
ICOM-	BLKINFO	OUT	Output from BLKINFO command. Signal to block all information sent to master.
ICOM-	LEDRS	OUT	Output from LEDRS command, to be used for resetting the LEDs.
ICOM-	SETG1	OUT	Output from SETG1 command, to be used for activation of setting group 1.
ICOM-	SETG2	OUT	Output from SETG2 command, to be used for activation of setting group 2.
ICOM-	SETG3	OUT	Output from SETG3 command, to be used for activation of setting group 3.
ICOM-	SETG4K	OUT	Output from SETG4 command, to be used for activation of setting group 4.
ICOM-	ZCOMBLK	OUT	Output from ZCOMBLK command, to be used for switching teleprotection on/off.

9.3 Setting table

Table 1: Setting table for the IEC 870-5-103 command function block ICOM

Parameter	Range	Unit	Default	Parameter description
FuncType	0-255		0	Main function type for terminal
OpFnType	Off, On		Off	Main function type operation for terminal

Table 2: Setting table for SPA communication

PARAMETER	SETTING RANGE	DESCRIPTION
Rear comm. port:		
SlaveNo	(1 - 899)	SPA-bus identification number
BaudRate	300, 1200, 2400, 4800, 9600, 19200, 38400 Baud	Communication speed
RemoteChActgrp	Open, Block	Open=Access right to change between active groups (both rear ports)
RemoteChSet	Open, Block	Open=Access right to change any parameter (both rear ports)
Front comm. port:		
SlaveNo	(1 - 899)	SPA-bus identification number
BaudRate	300, 1200, 2400, 4800, 9600 Baud	Communication speed

1 Application

The REx 5xx terminals may be provided with output functions that can be controlled either from a Substation Control System or from other terminals via the LON bus. Together with the configuration logic circuits, the user can govern pulses or steady output signals for control purposes within the terminal or via binary outputs. Command function blocks for 16 binary signals are used to receive information over the LON bus from the operator station and from other REx 5xx terminals. The other terminals must have a corresponding event function block to send the information.

2 Design

2.1 General

Seventy-nine multiple command function blocks with slow execution time is included in basic. One multiple command function block with fast execution time is available as an option.

The output signals can be of the types Off, Steady, or Pulse. The setting is done on the MODE input, common for the whole block, from the CAP 531 configuration tool.

0=Off sets all outputs to 0, independent of the values sent from the station level, that is, the operator station or remote-control gateway.

1=Steady sets the outputs to a steady signal 0 or 1, depending on the values sent from the station level.

2=Pulse gives a pulse with one execution cycle duration, if a value sent from the station level is changed from 0 to 1. That means that the configured logic connected to the command function blocks may not have a cycle time longer than the execution cycle time for the command function block.

The multiple command function block has 16 outputs combined in one block, which can be controlled from the operator station or from other terminals. One common name, with a maximum of 19 characters for the block, is set from the configuration tool CAP 531.

The output signals, here CMxx-OUT1 to CMxx-OUT16, are then available for configuration to built-in functions or via the configuration logic circuits to the binary outputs of the terminal.

2.2 Binary signal interbay communication

The multiple command function block can also be used to receive information over the LON bus from other REx 5xx terminals. The most common use is to transfer interlocking information between different bays. That can be performed by an Event function block as the send block and with a multiple command function block as the receive block. The configuration for the communication between terminals is made by the LON Network Tool.

The MODE input is set to Steady at communication between terminals and then the data are mapped between the terminals.

The command function also has a supervision function, which sets the output VALID to 0 if the block did not receive data within an INTERVAL time, that could be set. This function is applicable only during communication between terminals over the LON bus. The INTERVAL input time is set a little bit longer than the interval time set on the Event function block (see the document *Event function*). If INTERVAL=0, then VALID will be 1, that is, not applicable.

3 Configuration

The configuration of the signal outputs from the multiple command function in REx 5xx is made by the CAP 531 configuration tool.

4 Setting

The setting parameters for the multiple command function are set from the CAP 531 configuration tool.

The multiple command function has a common name setting (CmdOut) for the block. The MODE input sets the outputs to be one of the types Off, Steady, or Pulse. INTERVAL is used for the supervision of the cyclical receiving of data.

The appendix shows the parameters and their setting ranges.

5 Testing

Test of the multiple command function block is recommended to be performed in a system, that is, either in a complete delivery system as an acceptance test (FAT/SAT) or as parts of that system, because the command function blocks are connected in a delivery-specific way between bays and the station level.

Command function blocks included in the operation of different built-in functions must be tested at the same time as their corresponding functions.

6 Appendix

6.1 Function block

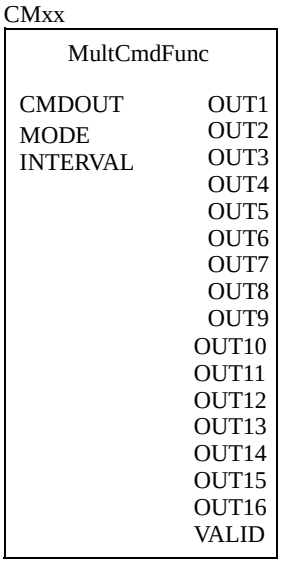

6.2 Signal list

Block	Signal	Type	Description
CMxx-(xx=01-80)	OUTy	OUT	Command output y (y=1-16)
CMxx-	VALID	OUT	Received data. 0: invalid, 1: valid
CMxx-	CMDOUT		See settings table
CMxx-	INTERVAL		See settings table
CMxx-	MODE		See settings table

6.3 Setting table

Parameter	Range	Unit	Default	Parameter description
CMDOUT	User def. string	String	CMxx-CMD-OUT	User defined common name for all outputs of function block CMxx (xx=01-80).String length up to 19 characters. Can only be set from CAP 531 configuration tool
INTERVAL	0-60	s	0	Time interval for supervision of recieved data. Can only be set from CAP 531 configuration tool
MODE	0, 1, 2		0	Operation mode. 0: Off, 1: Not pulsed (steady), 2: Pulsed. Can only be set from CAP 531 configuration tool

1 Application

When using a Substation Automation system, events can be continuously sent or polled from the terminal. These events can come from any available signal in the terminal that is connected to the event function block. The event function block can also handle double indication, that is normally used to indicate positions of high-voltage apparatus. With this event function block in the REx 5xx terminal, data can be sent to other terminals over the LON bus.

2 Theory of operation

The events can come from both internal logical signals and binary input channels. The internal signals are time tagged in the main processing module, while the binary input channels are time tagged directly on each I/O module. The events are produced according to the set-event masks. The event masks are treated commonly for both the LON and SPA channels. All events according to the event mask are stored in a buffer, which contains up to 1000 events. If new events appear before the oldest event in the buffer is read, the oldest event is overwritten and an overflow alarm appears.

The outputs from the event function block are formed by the reading of status and events by the station HMI on either every single input or double input. The user-defined name for each input is intended to be used by the station HMI.

Twelve of the event function blocks are executed with fast cyclicity. That means that the time-tagging resolution on the events that are emerging from internal logical signals, created from configurable logic, is the same as the cyclicity of this logic. The time tagging resolution on the events that are emerging from binary input signals have a resolution of 1 ms.

Two special signals for event registration purposes are available in the terminal, *Terminal restarted* and *Event buffer overflow.*

3 Design

3.1 General

As basic, 12 event function blocks running with a fast cyclicity, 6 ms, are available in REx 5xx. When the function Apparatus control is used, additional 24 event function blocks, running with a slower cyclicity, 200 ms, are available. Optionally, eight additional event blocks can be used in the variant of REC 561 applicable for up to 12 bays.

Each event function block has 16 connectables corresponding to 16 inputs EVxx-INPUT1 to EVxx-INPUT16. Every input can be given a name with up to 19 characters from the CAP 531 configuration tool.

The inputs can be used as individual events or can be defined as double indication events.

The inputs can be set individually from the Station Monitoring System (SMS) under the Mask-Event function as:

- No events
- OnSet, at
- OnReset, at
- OnChange, at

Also an input PrColxx (xx=01-44) is available on the function block to define on which protocol the events shall be sent.

The event function blocks EV01-EV06 have inputs for information numbers and function type, which are used to define the events according to the communication standard IEC 870-5-103. For more information see document *Remote communication.*

3.2 Double indication

Double indications are used to handle a combination of two inputs at a time, for example, one input for the open and one for the close position of a circuit breaker or disconnector. The double indication consists of an odd and an even input number. When the odd input is defined as a double indication, the next even input is considered to be the other input. The odd inputs has a suppression timer to suppress events at 00 states.

To be used as double indications the odd inputs are individually set from the SMS under the Mask-Event function as:

- Double indication
- Double indication with midposition suppression

Here, the settings of the corresponding even inputs have no meaning.

These states of the inputs generate events. The status is read by the station HMI on the status indication for the odd input:

- 00 generates an intermediate event with the read status 0
- 01 generates an close event with the read status 1
- 10 generates an open event with the read status 2
- 11 generates an undefined event with the read status 3

3.3 Communication between terminals

The BOUND and INTERVAL inputs are available on the event function block in REx 5xx terminal.

The BOUND input set to 1 means that the output value of the event block is bound to another control terminal on the LON bus. The event function block is then used to send data over the LON bus to other REx 5xx terminals. The most common use is to transfer interlocking information between different bays. That can be performed by an event function block used as a send block and with a Multiple Command function block used

as a receive block. In document *Apparatus Control* describes how to transfer the interlocking information. The configuration of the communication between control terminals is made by the LON Network Tool.

The INTERVAL input is applicable only when the BOUND input is set to 1. The INTERVAL is intended to be used for cyclic sending of data to other control terminals via the LON bus with the interval time as set. This cyclic sending of data is used as a backup of the event-driven sending, which is always performed. With cyclic sending of data, the communication can be supervised by a corresponding INTERVAL input on the Multiple Command function block in another control terminal connected to the LON bus. This INTERVAL input time is set a little bit longer than the interval time set on the event function block (see document *Binary signal interbay communication*. With INTERVAL=0, only event-driven sending is performed.

4 Setting

The event reporting can be set from the SMS as:

- Use event masks
- Report no events
- Report all events

Use of event masks is the normal reporting of events, that is, the events are reported as defined in the database.

An event mask can be set individually for each available signal in the terminal. The setting of the event mask can only be performed from the SMS.

All event mask settings are treated commonly for all communication channels of the terminal.

Report no events means blocking of all events in the terminal.

Report all events means that all events, that are set to OnSet/OnReset/OnChange are reported as OnChange, that is, both at set and reset of the signal. For double indications when the suppression time is set, the event ignores the timer and is reported directly. Masked events are still masked.

Parameters to be set for the event function block are:

- T_SUPRyy including the suppression time for double indications.
- NAMEyy including the name for each input.
- PrColxx including the type of protocol for sending the events.
- INTERVAL used for the cyclic sending of data.
- BOUND telling that the block has connections to other terminals over the LON bus.
- FuncTEVx (for EV01-EV06) including the function type for sending events via IEC 870-5-103.
- InfoNoyy (for EV01-EV06) including the information number for the events sending via IEC 870-5-103.

These parameters are set from the CAP 531 configuration tool. When the BOUND parameter is set, the settings of the event masks have no meaning. The INTERVAL and BOUND inputs are not available in REL 531.

The appendix describes the parameters and their setting ranges.

5 Testing

During testing, the terminal can be set in Test Mode from the SMS. The functionality of the event reporting during Test Mode is set from the SMS as follows:

- Use event masks
- Report no events
- Report all events

See the explanation in section “Setting” on page 547.

In Test Mode, individually event blocks can be blocked from the SMS.

Individually event blocks can also be blocked from the local HMI under the menu:

Test
TestMode
BlockEventFunc

6 Appendix

6.1 Function blocks

EVxx

xx = 01 - 06

EVENT

INPUT1
INPUT2
INPUT3
INPUT4
INPUT5
INPUT6
INPUT7
INPUT8
INPUT9
INPUT10
INPUT11
INPUT12
INPUT13
INPUT14
INPUT15
INPUT16
T_SUPR01
T_SUPR03
T_SUPR05
T_SUPR07
T_SUPR09
T_SUPR11
T_SUPR13
T_SUPR15
NAME01
NAME02
NAME03
NAME04
NAME05
NAME06
NAME07
NAME08
NAME09
NAME10
NAME11
NAME12
NAME13
NAME14
NAME15
NAME16
PrColxx
INTERVAL
BOUND
FuncTEVx
InfoNo01
InfoNo02
InfoNo03
InfoNo04
InfoNo05
InfoNo06
InfoNo07
InfoNo08
InfoNo09
InfoNo10
InfoNo11
InfoNo12
InfoNo13
InfoNo14
InfoNo15
InfoNo16

Figure 1: Function block EV01 - EV06

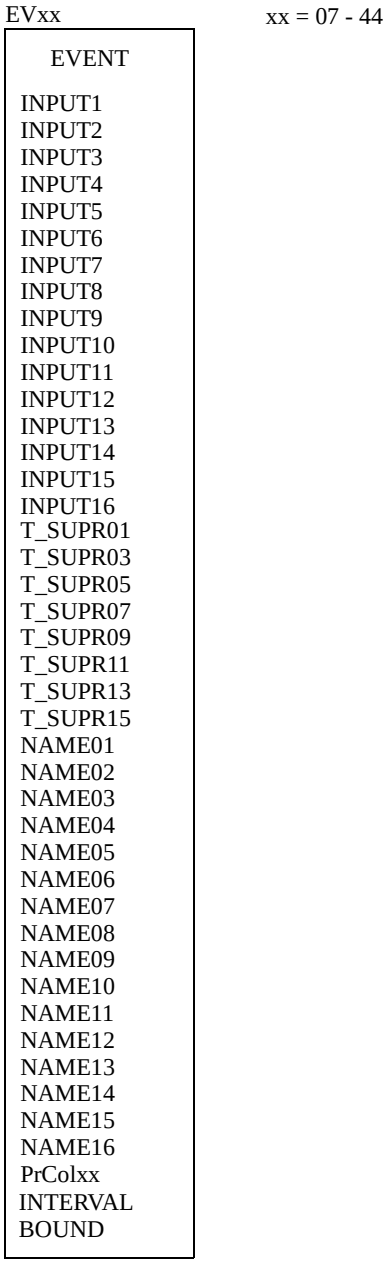

Figure 2: Function block EV07 - EV44

6.2 Signal list

Block	Signal	Type	Description
EVxx-(xx=01-44)	INPUT1	IN	Event input 1
EVxx-	INPUT2	IN	Event input 2
EVxx-	INPUT3	IN	Event input 3
EVxx-	INPUT4	IN	Event input 4
EVxx-	INPUT5	IN	Event input 5
EVxx-	INPUT6	IN	Event input 6
EVxx-	INPUT7	IN	Event input 7
EVxx-	INPUT8	IN	Event input 8
EVxx-	INPUT9	IN	Event input 9
EVxx-	INPUT10	IN	Event input10
EVxx-	INPUT11	IN	Event input 11
EVxx-	INPUT12	IN	Event input 12
EVxx-	INPUT13	IN	Event input 13
EVxx-	INPUT14	IN	Event input 14
EVxx-	INPUT15	IN	Event input 15
EVxx-	INPUT16	IN	Event input 16
EVxx-	NAME01		See settings table
EVxx-	NAME02		See settings table
EVxx-	NAME03		See settings table
EVxx-	NAME04		See settings table
EVxx-	NAME05		See settings table
EVxx-	NAME06		See settings table
EVxx-	NAME07		See settings table
EVxx-	NAME08		See settings table
EVxx-	NAME09		See settings table
EVxx-	NAME10		See settings table
EVxx-	NAME11		See settings table
EVxx-	NAME12		See settings table
EVxx-	NAME13		See settings table
EVxx-	NAME14		See settings table
EVxx-	NAME15		See settings table
EVxx-	NAME16		See settings table
EVxx-	T_SUPR01		See settings table
EVxx-	T_SUPR03		See settings table
EVxx-	T_SUPR05		See settings table
EVxx-	T_SUPR07		See settings table
EVxx-	T_SUPR09		See settings table
EVxx-	T_SUPR11		See settings table

Block	Signal	Type	Description
EVxx-	T_SUPR13		See settings table
EVxx-	T_SUPR15		See settings table
EVxx-	InfoNo01		See settings table (Signal only present in blocks EV01-EV06)
EVxx-	InfoNo02		See settings table (Signal only present in blocks EV01-EV06)
EVxx-	InfoNo03		See settings table (Signal only present in blocks EV01-EV06)
EVxx-	InfoNo04		See settings table (Signal only present in blocks EV01-EV06)
EVxx-	InfoNo05		See settings table (Signal only present in blocks EV01-EV06)
EVxx-	InfoNo06		See settings table (Signal only present in blocks EV01-EV06)
EVxx-	InfoNo07		See settings table (Signal only present in blocks EV01-EV06)
EVxx-	InfoNo08		See settings table (Signal only present in blocks EV01-EV06)
EVxx-	InfoNo09		See settings table (Signal only present in blocks EV01-EV06)
EVxx-	InfoNo10		See settings table (Signal only present in blocks EV01-EV06)
EVxx-	InfoNo11		See settings table (Signal only present in blocks EV01-EV06)
EVxx-	InfoNo12		See settings table (Signal only present in blocks EV01-EV06)
EVxx-	InfoNo13		See settings table (Signal only present in blocks EV01-EV06)
EVxx-	InfoNo14		See settings table (Signal only present in blocks EV01-EV06)
EVxx-	InfoNo15		See settings table (Signal only present in blocks EV01-EV06)
EVxx-	InfoNo16		See settings table (Signal only present in blocks EV01-EV06)
EVxx-	INTERVAL		See settings table
EVxx-	BOUND		See settings table
EVxx-	PrColxx		See settings table
EVxx-	FuncTEVxx		See settings table (Signal only present in blocks EV01-EV06)

6.3 Setting table

Parameter	Range	Unit	Default	Parameter description
INTERVAL	0 - 60	s	0	Cyclic sending of data. Can only be set from CAP 531 configuration tool
BOUND	0, 1		0	Event connected to other terminals on the network, 0: not connected, 1: connected. Can only be set from CAP 531 configuration tool
PrColxx	0-7		0	Protocol for event block xx (xx=01-06). 0: Not used, 1: SPA, 2: LON, 3: SPA+LON, 4: IEC, 5: IEC+SPA, 6: IEC+LON, 7: IEC+LON+SPA. Range valid only for blocks EV01-EV06. Can only be set from CAP 531 configuration tool
	0-3		0	Protocol for event block xx (xx=07-44). 0: Not used, 1: SPA, 2: LON, 3: SPA+LON Range valid only for blocks EV07-EV44. Can only be set from CAP 531 configuration tool
FuncTEVxx	0-255		0	Function type for event block xx (xx=01-06), used for IEC protocol communication. Only present in blocks EV01-EV06
InfoNo01	0-255		0	Information number for event input 1, used for IEC protocol communication. Only present in blocks EV01-EV06

Parameter	Range	Unit	Default	Parameter description
InfoNo02	0-255		0	Information number for event input 2, used for IEC protocol communication. Only present in blocks EV01-EV06
InfoNo03	0-255		0	Information number for event input 3, used for IEC protocol communication. Only present in blocks EV01-EV06
InfoNo04	0-255		0	Information number for event input 4, used for IEC protocol communication. Only present in blocks EV01-EV06
InfoNo05	0-255		0	Information number for event input 5, used for IEC protocol communication. Only present in blocks EV01-EV06
InfoNo06	0-255		0	Information number for event input 6, used for IEC protocol communication. Only present in blocks EV01-EV06
InfoNo07	0-255		0	Information number for event input 7, used for IEC protocol communication. Only present in blocks EV01-EV06
InfoNo08	0-255		0	Information number for event input 8, used for IEC protocol communication. Only present in blocks EV01-EV06
InfoNo09	0-255		0	Information number for event input 9, used for IEC protocol communication. Only present in blocks EV01-EV06
InfoNo10	0-255		0	Information number for event input 10, used for IEC protocol communication. Only present in blocks EV01-EV06
InfoNo11	0-255		0	Information number for event input 11, used for IEC protocol communication. Only present in blocks EV01-EV06
InfoNo12	0-255		0	Information number for event input 12, used for IEC protocol communication. Only present in blocks EV01-EV06
InfoNo13	0-255		0	Information number for event input 13, used for IEC protocol communication. Only present in blocks EV01-EV06
InfoNo14	0-255		0	Information number for event input 14, used for IEC protocol communication. Only present in blocks EV01-EV06
InfoNo15	0-255		0	Information number for event input 15, used for IEC protocol communication. Only present in blocks EV01-EV06
InfoNo16	0-255		0	Information number for event input 16, used for IEC protocol communication. Only present in blocks EV01-EV06
T_SUPR03	0.000-60.000	s	0.000	Suppression time for event input 3. Can only be set using the CAP 531 configuration tool
T_SUPR05	0.000-60.000	s	0.000	Suppression time for event input 5. Can only be set using the CAP 531 configuration tool
T_SUPR07	0.000-60.000	s	0.000	Suppression time for event input 7. Can only be set using the CAP 531 configuration tool
T_SUPR09	0.000-60.000	s	0.000	Suppression time for event input 9. Can only be set using the CAP 531 configuration tool
T_SUPR11	0.000-60.000	s	0.000	Suppression time for event input 11. Can only be set using the CAP 531 configuration tool
T_SUPR13	0.000-60.000	s	0.000	Suppression time for event input 13. Can only be set using the CAP 531 configuration tool
T_SUPR15	0.000-60.000	s	0.000	Suppression time for event input 15. Can only be set using the CAP 531 configuration tool

Parameter	Range	Unit	Default	Parameter description
EventMask 1	No events, OnSet, OnReset, OnChange, Double Ind., Double Ind. with midpos supr.		No events	Event mask for input 1. Can only be set from SMS
EventMask 2	No events, OnSet, OnReset, OnChange, Double Ind., Double Ind. with midpos supr.		No events	Event mask for input 2. Can only be set from SMS
EventMask 3	No events, OnSet, OnReset, OnChange, Double Ind., Double Ind. with midpos supr.		No events	Event mask for input 3. Can only be set from SMS
EventMask 4	No events, OnSet, OnReset, OnChange, Double Ind., Double Ind. with midpos supr.		No events	Event mask for input 4. Can only be set from SMS
EventMask 5	No events, OnSet, OnReset, OnChange, Double Ind., Double Ind. with midpos supr.		No events	Event mask for input 5. Can only be set from SMS
EventMask 6	No events, OnSet, OnReset, OnChange, Double Ind., Double Ind. with midpos supr.		No events	Event mask for input 6. Can only be set from SMS

Parameter	Range	Unit	Default	Parameter description
EventMask 7	No events, OnSet, OnReset, OnChange, Double Ind., Double Ind. with midpos supr.		No events	Event mask for input 7. Can only be set from SMS
EventMask 8	No events, OnSet, OnReset, OnChange, Double Ind., Double Ind. with midpos supr.		No events	Event mask for input 8. Can only be set from SMS
EventMask 9	No events, OnSet, OnReset, OnChange, Double Ind., Double Ind. with midpos supr.		No events	Event mask for input 9. Can only be set from SMS
EventMask 10	No events, OnSet, OnReset, OnChange, Double Ind., Double Ind. with midpos supr.		No events	Event mask for input 10. Can only be set from SMS
EventMask 11	No events, OnSet, OnReset, OnChange, Double Ind., Double Ind. with midpos supr.		No events	Event mask for input 1. Can only be set from SMS
EventMask 12	No events, OnSet, OnReset, OnChange, Double Ind., Double Ind. with midpos supr.		No events	Event mask for input 1. Can only be set from SMS

Parameter	Range	Unit	Default	Parameter description
EventMask 13	No events, OnSet, OnReset, OnChange, Double Ind., Double Ind. with midpos supr.		No events	Event mask for input 1. Can only be set from SMS
EventMask 14	No events, OnSet, OnReset, OnChange, Double Ind., Double Ind. with midpos supr.		No events	Event mask for input 14. Can only be set from SMS
EventMask 15	No events, OnSet, OnReset, OnChange, Double Ind., Double Ind. with midpos supr.		No events	Event mask for input 15. Can only be set from SMS
EventMask 16	No events, OnSet, OnReset, OnChange, Double Ind., Double Ind. with midpos supr.		No events	Event mask for input 16. Can only be set from SMS

1 General overview

The aim of the disturbance report is to contribute to the highest possible quality of electrical supply. This is done by a continuous collection of system data and, upon occurrence of a fault, by storing a certain amount of pre-fault, fault, and post-fault data.

The stored data can be used for analysis and decision making to find and eliminate possible system and equipment weaknesses.

The disturbance report is a common name for several facilities to supply the operator with more information about the disturbances and the system. Some of the facilities are basic and some are optional in the different products. For some products not all facilities are available.

The facilities included in the disturbance report are:

- General disturbance information
- Indications
- Event recorder
- Fault locator
- Trip values (phase values)
- Disturbance recorder

The whole disturbance report can contain information for up to 10 disturbances, each with the data coming from all the parts mentioned above, depending on the options installed. All information in the disturbance report is stored in non-volatile flash memories. This implies that no information is lost in case of loss-of-power supply.

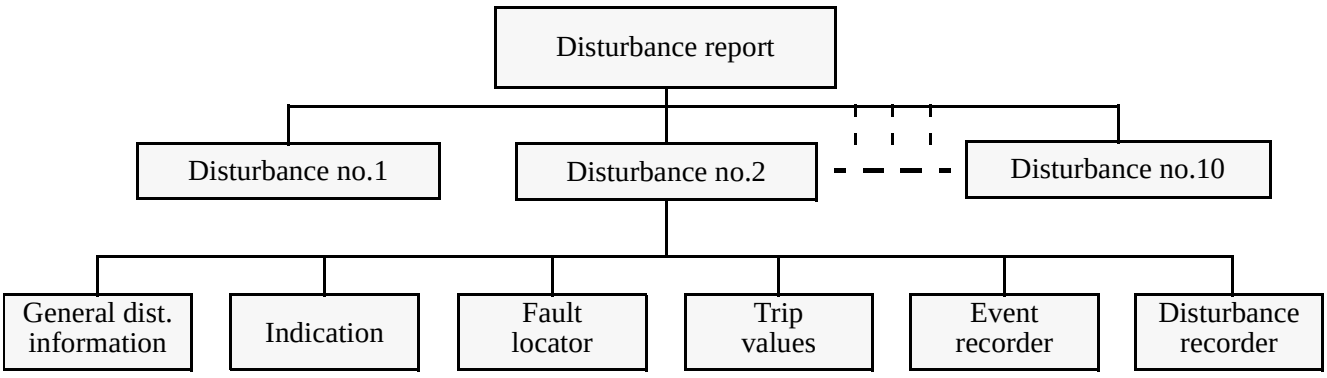

Figure 1: Disturbance report structure.

Up to 10 disturbances can always be stored. If a new disturbance is to be recorded when the memory is full, the oldest disturbance is over-written by the new one. The nominal memory capacity for the disturbance recorder is measured with 10 analogue and 48 binary signals recorded, which means that in the case of long recording times, fewer than 10 disturbances are stored. If fewer analogue signals are recorded, a longer total recording time is available. This memory limit does not affect the rest of the disturbance report.

1.1 General disturbance information

Disturbance overview is a summary of all the stored disturbances. The overview is available only on a front-connected PC or via the Station Monitoring System (SMS). The overview contains:

- Disturbance index
- Date and time
- Trip signals
- Trig signal that activated the recording
- Distance to fault (requires Fault locator)
- Fault loop selected by the Fault locator (requires Fault locator)

Disturbance Summary is automatically scrolled on the human-machine interface (HMI). Here the two latest disturbances (DisturbSummary 1, which is the latest and DisturbSummary 2 which is the second latest) are presented with:

- Date and time
- Selected indications (set with the Indication mask)
- Distance to fault and fault loop selected by the Fault locator

Disturbance data on the HMI is presented at:

DisturbReport
Disturbances
Disturbance n (1 - 10)

The date and time of the disturbance, the trig signal, the indications, the fault locator result and the trip values are available, provided that the corresponding functions are installed.

1.2 Indications

Indications is a list of signals that were activated during the fault time of the disturbance. A part (or all) of these signals are automatically scrolled on the local HMI after a disturbance.

1.3 Event recorder

The event recorder contains an event list with time-tagged events. In the Station Monitoring System, this list is directly connected to a disturbance.

1.4 Fault locator

The fault locator contains information about the distance to the fault and about the measuring loop that was selected for the calculation. After changing the system parameters in the terminal, a recalculation of the distance to the fault can be made in the protection.

1.5 Trip values

Trip values includes phasors of currents and voltages before the fault and during the fault.

1.6 Disturbance recorder

The disturbance recorder records analogue and binary signal data before, during and after the fault.

On the local HMI, the indications, the fault locator result (when applicable), and the trip values are available. For a complete disturbance report, front communication with a PC or remote communication with SMS is required.

2 Recording times

The recording times are valid for the whole disturbance report. The disturbance recorder and the event recorder register disturbance data and events during *tRecording*, the total recording time. However, indications are only registered during the fault time.

The total recording time, *tRecording*, of a recorded disturbance is:

tRecording = tPre + tFault + tPost, or tPre + tLim, depending on which criterion stops the current disturbance recording.

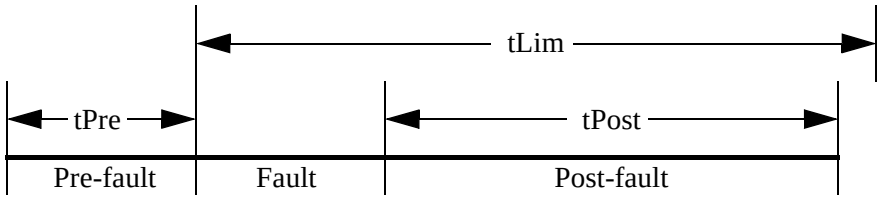

Figure 2: Recording times relationship.

The different time periods are described below:

Period	Is the ...
tPre	Pre-fault recording time. More correctly it should be called pre-triggering time, because it consists of not only a pre-fault time but also the operating time for the trigger itself.
tFault	Fault time of the recording. The fault time cannot be set and continues as long as any valid trigger condition, binary or analogue, persists (unless limited by tLim the limit time, see below).
tPost	Post-fault recording time. When all activated triggers during the fault time are reset, the current disturbance recording continues according to the set post-fault time.
tLim	Limit time, which is the maximum recording time after the disturbance recording was triggered. The limit time is used to eliminate the consequences of a faulty trigger that does not reset within a reasonable time interval. It limits the maximum recording time of a recording and prevents subsequent overwriting of already stored disturbances.

3 Analogue signals

Up to 10 analogue signals (five voltages and five currents from the transformer module) can be selected for recording and trig if the disturbance recorder function is installed. If fewer than 10 signals are selected, the maximum storing capacity in the flash memories, regarding total recording time are increased.

A user-defined name for each of the signals can be programmed in the terminal.

For each of the 10 analogue signals, *Operation* = *On* means that it is recorded by the disturbance recorder. The triggering itself is independent of the setting of *Operation*, and triggers even if operation is set to *Off*. Both undervoltage and overvoltage can be used as trig condition. The same applies for the current signals.

The check of the trig condition is based on peak-to-peak values. When this is found, the absolute average value of these two peak values is calculated. If the average value is above the threshold level for an overvoltage or overcurrent trig, this trig is indicated with a greater than (>) sign with the user-defined name.

If the average value is below the set threshold level for an undervoltage or undercurrent trig, this trig is indicated with a less than (<) sign with its name. The procedure is separately performed for each channel.

This method of checking the analogue start conditions gives a function which is insensitive to DC offset in the signal. The operating time for this start is typically in the range of one cycle, 20 ms for a 50 Hz network.

The analogue signals are presented only in the disturbance recording, but they affect the entire disturbance report when being used for triggering.

4 Binary signals

Up to 48 binary signals can be selected from the signal list, where all available signals are grouped under each function. The 48 signals can be selected from among internal logical signals and binary input signals. For each of the 48 signals, it is also possible to select if the signal is to be used as a trigger of the disturbance report, and if the trig should be activated on a 1 or a 0. A binary signal can be selected to activate the red LED on the local HMI.

A user-defined name for each of the signals can be programmed in the terminal.

The selected 48 signals are presented in the event list and the disturbance recording. But they affect the whole disturbance report when they are used for triggering.

The indications, that are to be automatically scrolled on the HMI when a disturbance has been recorded are also selected from these 48 signals with the HMI Indication Mask.

4.1 Trig signals

The trig conditions affect the entire disturbance report. As soon as a trig condition is fulfilled, a complete disturbance report is recorded. On the other hand, if no trig condition is fulfilled, there is no disturbance report, no calculation of distance to fault, no indications, and so on. This implies the importance of choosing the right signals as trig conditions.

A trig can be of type:

- Manual trig
- Binary-signal trig
- Analogue-signal trig (over/under function)

4.1.1 Manual trig

Manual trig starts from the local HMI or from a front-connected PC (or SMS). This is found on the HMI menu tree at:

DisturbReport
ManualTrig

4.1.2 Binary trig

A trig on a binary signal can be activated on either a logical 1 or a logical 0. When a binary input is used as trig, the signal must stay for at least 15 ms to be picked up.

Note that when a binary signal is programmed to trig on a logical 0, this signal is not presented as an indication in the disturbance report.

4.1.3 Analogue trig

All analogue signals are available for trigger purposes, no matter if they are recorded in the disturbance recorder or not. But the disturbance recorder function must be installed in the terminal.

1 Introduction

The main part of the settings for the Disturbance Report is found on the local human-machine interface (HMI) at:

Settings
DisturbReport

The settings include:

Operation	Disturbance Report (On/Off)
	Re-trig during post-fault state (On/Off)
SequenceNo	Sequence number (0-255) (normally not necessary to set)
RecordingTimes	Recording times for the Disturbance Report and the event/indication logging, including pre-fault time, post-fault time, and limit time for the entire disturbance
BinarySignals	Selection of binary signals, trig conditions, HMI indication mask and HMI red LED option
AnalogSignals	Recording mask and trig conditions
FaultLocator	Distance measurement unit (km/miles/%)

User-defined names of analogue signals can be set at:

Configuration
AnalogInputs

The user-defined names of binary signals can be set at:

Configuration
DisturbReport
Input n (n=1-48)

The analogue and binary signals appear with their user-defined names.

1.1 Settings during normal conditions

Table 1: How the settings affect different functions in the disturbance report

HMI Setting menu	Function	Disturbance summary (on HMI)	Disturbance recorder	Indica-tions	Event list (SMS)	Trip values	Fault locator
Operation	Operation (On/ Off)	Yes	Yes	Yes	Yes	Yes	Yes
Recording times	Recording times (tPre, tPost, tLim)	No	Yes	No	Yes	No	No
Binary signals	Trig operation and trig level	Yes	Yes	Yes	Yes	Yes	Yes
	Indication mask (for automatic scrolling)	Yes	No	No	No	No	No
Analogue signals	Operation (On/ Off)	No	Yes	No	No	Yes	Yes
	Trig over/under function	Yes	Yes	Yes	Yes	Yes	Yes
Fault Locator	Fault locator set-tings (Distance Unit)	No	No	No	No	No	Yes

2 Operation

HMI submenu:

Settings
DisturbReport
Operation

Operation can be set to *On* or *Off*. If *Off* is selected, note that no disturbance report is registered, including indications, fault locator, event recorder, and disturbance recorder.

Operation = Off:

- Disturbances are not stored.
- LED information (yellow - start, red - trip) is not stored or changed.
- No disturbance summary is scrolled on the local HMI.

Operation = On:

- Disturbances are stored, disturbance data can be read from the local HMI and from a front-connected PC or Station Monitoring System (SMS).
- LED information (yellow - start, red - trip) is stored.
- The disturbance summary is automatically scrolled on the local HMI for the two latest registered disturbances, until cleared.

Post re-trig can be set to On or Off

Postretrig = On:
Re-trig during the set post-fault time is enabled.

Postretrig = Off
Re-trig during the set post fault time is not accepted.

2.1 Sequence number

HMI submenu:

Settings
DisturbReport
SequenceNo

Normally, this setting option is seldom used. Each disturbance is assigned a number in the disturbance report. The first disturbance each day normally receives *SequenceNo = 0*. The value of *SequenceNo* that can be read in the service report is the number that will be assigned to the next disturbance registered during that day.

In normal use, the sequence number is increased by one for each new disturbance until it is reset to zero each midnight.

2.2 Recording times

HMI submenu:

Settings
DisturbReport
RecordingTimes

Under this submenu, the different recording times for the disturbance report are set (the pre-fault time, post-fault time, and limit time). These recording times affect the disturbance recorder and event recorder functions. The total recording time, *tRecording*, of a recorded disturbance is:

tRecording = tPre + tFault + tPost, or tPre + tLim, depending on which criterion stops the current disturbance recording.

2.3 Binary signals

HMI submenu:

Configuration
DisturbReport
Input n (n=1-48)

Up to 48 binary signals can be selected from the signal list, where all available signals are grouped function by function. The 48 signals can be selected among internal logical signals and binary input signals. Each selected signal is registered by the disturbance recorder, event recorder, and indication functions during a recording.

A user-defined name for each of the signals can be entered. This name can comprise up to 13 characters.

HMI submenu:

Settings
DisturbReport
BinarySignals

For each of the 48 signals, it is also possible to select if the signal is to be used as a trigger for the start of the disturbance report (*TrigOperation*), and if the trig should be activated at a logical 1 or 0 level (*TrigLevel*).

The indications in the disturbance summary, that are automatically scrolled on the HMI when a disturbance is registered, are also selected from these 48 signals using the indication mask.

2.4 Analogue signals

HMI-submenu:

Settings
DisturbReport
AnalogSignals

This HMI submenu is only available when the disturbance recorder option is installed.
For each of the 10 analogue signals (five voltages and five currents), *Operation = On* means that it is recorded by the disturbance recorder. If fewer than 10 signals are selected, the maximum storing capacity in the flash memories for total recording time becomes longer.

Both undervoltage and overvoltage can be used as triggering condition. The same applies for the current signals. The triggering is independent of the setting of *Operation* and triggers even if *Operation = Off*.

A user-defined name for each of the signals can be entered. It can consist of up to 13 characters. It is found at:

Configuration
AnalogInputs

3 Settings during test

3.1 Test mode

During testing, the operation of the disturbance report is required. The setting of this operation is found at the HMI submenu:

Test
Test Mode
DisturbReport
Operation, DisturbSummary

When *TestMode* is set to *On* (Operation = On), the setting of the disturbance report parameters have the following impact:

Operation = Off DisturbSummary = Off

- Disturbances are not stored.
- LED information is not shown on the HMI and not stored.
- No Disturbance Summary is scrolled on the HMI.

Operation = Off DisturbSummary = On

- Disturbances are not stored.
- LED information (yellow - start, red - trip) are shown on the local HMI, but not stored in the terminal.
- Disturbance summary is automatically scrolled on the local HMI for the two latest registered disturbances, until cleared. The information is not stored in the terminal.

Operation = On DisturbSummary = Off or On

- The disturbance report works as in normal mode.
- Disturbances are stored. Data can be read from the local HMI, a front-connected PC, or SMS.
- LED information (yellow - start, red - trip) is stored.
- Disturbance summary is automatically scrolled on the local HMI for the two latest registered disturbances, until cleared.
- All disturbance data stored during test mode remains in the terminal when returning to normal mode.

3.2 Activation of manual triggering

A disturbance report can be manually triggered from the local HMI, a front-connected PC, or SMS. When the trig is activated, the manual trig signal is generated. This feature is especially useful for testing.

4 Appendix

4.1 Function block

DRP1-

CLRLEDS	OFF
INPUT1	RECSTART
INPUT2	RECMADE
INPUT3	MEMUSED
INPUT4	CLEARED
INPUT5	
INPUT6	
INPUT7	
INPUT8	
INPUT9	
INPUT10	
INPUT11	
INPUT12	
INPUT13	
INPUT14	
INPUT15	
INPUT16	
NAME01	
NAME02	
NAME03	
NAME04	
NAME05	
NAME06	
NAME07	
NAME08	
NAME09	
NAME10	
NAME11	
NAME12	
NAME13	
NAME14	
NAME15	
NAME16	
FuncT01	
FuncT02	
FuncT03	
FuncT04	
FuncT05	
FuncT06	
FuncT07	
FuncT08	
FuncT09	
FuncT10	
FuncT11	
FuncT12	
FuncT13	
FuncT14	
FuncT15	
FuncT16	
InfoNo01	
InfoNo02	
InfoNo03	
InfoNo04	
InfoNo05	
InfoNo06	
InfoNo07	
InfoNo08	
InfoNo09	
InfoNo10	
InfoNo11	
InfoNo12	
InfoNo13	
InfoNo14	
InfoNo15	
InfoNo16	

There are three different disturbance function blocks. The diagram above shows the first one, DRP1-. The other two (DRP2- and DRP3-) only contains the inputs, numbered 17 to 32 and 33 to 48 respectively.

4.2 Signal list

Block	Signal	Type	Description
DRP1-	CLRLEDS	IN	Disturbance Report-Clear front panel LEDs
DRP1-	INPUT1	IN	Select binary signal to be recorded as signal no. 1.
DRP1-	INPUT2	IN	Select binary signal to be recorded as signal no. 2.
DRP1-	INPUT3	IN	Select binary signal to be recorded as signal no. 3.
DRP1-	INPUT4	IN	Select binary signal to be recorded as signal no. 4.
DRP1-	INPUT5	IN	Select binary signal to be recorded as signal no. 5.
DRP1-	INPUT6	IN	Select binary signal to be recorded as signal no. 6.
DRP1-	INPUT7	IN	Select binary signal to be recorded as signal no. 7.
DRP1-	INPUT8	IN	Select binary signal to be recorded as signal no. 8.
DRP1-	INPUT9	IN	Select binary signal to be recorded as signal no. 9.
DRP1-	INPUT10	IN	Select binary signal to be recorded as signal no. 10.
DRP1-	INPUT11	IN	Select binary signal to be recorded as signal no. 11.
DRP1-	INPUT12	IN	Select binary signal to be recorded as signal no. 12.
DRP1-	INPUT13	IN	Select binary signal to be recorded as signal no. 13.
DRP1-	INPUT14	IN	Select binary signal to be recorded as signal no. 14.
DRP1-	INPUT15	IN	Select binary signal to be recorded as signal no. 15.
DRP1-	INPUT16	IN	Select binary signal to be recorded as signal no. 16.
DRP1-	NAME01-16	IN	See the setting table
DRP1-	FuncT01-16	IN	See the setting table
DRP1-	InfoNo01-16	IN	See the setting table
DRP1-	CLEARED	OUT	All disturbances in Disturbance Report cleared
DRP1-	MEMUSED	OUT	More than 80% of recording memory used
DRP1-	OFF	OUT	Disturbance Report function turned off
DRP1-	RECMADE	OUT	Disturbance recording made
DRP1-	RECSTART	OUT	Disturbance recording started

4.3 Setting table

Parameter	Range	Unit	Default	Parameter description
Disturbance report				
Operation	Off, On		On	Disturbance report deactivated/activated (off/on)
PostRetrig	Off, On		Off	Postfault retrig off/on
RecordingTime				
tPre	0.05 - 0.30	s	0.10	Prefault recording time
tPost	0.1 - 3.0	s	0.5	Postfault recording time
tLim	0.5 - 4.0	s	1.0	Fault recording time limit
Binary signals (x=1-48) (Settings to be set for each input)				
TrigOpera-tion	Off, On		Off	On/Off: The binary signal is used as recordning trigger (On) or not used (Off)
TrigLevel	High-to-low, Low-to-high		High-to-low	Selects the signal transition used for triggering. From-1-to-0 or from-0-to-1
Indication-Mask	Hide, show		Hide	Show: The signal is displayed (and automatically scrolled) on the local HMI
SetLed	Off, On		Off	On: When trigger conditions is satisfied, the red HMI LED is lit
NAMEx	Usr def. string		Input x	User defined name of binary input. The name can only be set using the CAP 531 configuration tool
Analogue voltage signals (U1b-U5b) (Settings to be set for each input)				
Operation	Off, On		On	On: The signal is recorded in the disturbance recorder (if present)
<TrigLevel	0-110	%	90	Undervoltage (U<) trigger level in % of voltage signal (U1b-U5b)
>TrigLevel	0-200	%	110	Overvoltage (U>) trigger level in % of voltage signal (U1b-U5b)
<TrigOpera-tion	Off, On		Off	On: Undervoltage recording trigger is active
>TrigOpera-tion	Off, On		Off	On: Overvoltage recording trigger is active
Analogue current signals (I1b-I5b) (Settings to be set for each input)				
Operation	Off, On		On	On: The signal is recorded in the disturbance recorder (if present)
<TrigLevel	0-200	%	50	Undercurrent (I<) trigger level in % of current signal (I1b-I5b)
>TrigLevel	0-5000	%	200	Overcurrent (I>) trigger level in % of current signal (I1b-I5b)
<TrigOpera-tion	Off, On		Off	On: Undercurrent recording trigger is active
>TrigOpera-tion	Off, On		Off	On: Overcurrent recording trigger is active
Sequence number				

Parameter	Range	Unit	Default	Parameter description
Sequen-ceNo	0 - 255		0	Disturbance sequence number
Function block setting inputs				
FuncT01	0-255		0	Function type 1
FuncT02	0-255		0	Function type 2
FuncT03	0-255		0	Function type 3
FuncT04	0-255		0	Function type 4
FuncT05	0-255		0	Function type 5
FuncT06	0-255		0	Function type 6
FuncT07	0-255		0	Function type 7
FuncT08	0-255		0	Function type 8
FuncT09	0-255		0	Function type 9
FuncT10	0-255		0	Function type 10
FuncT11	0-255		0	Function type 11
FuncT12	0-255		0	Function type 12
FuncT13	0-255		0	Function type 13
FuncT14	0-255		0	Function type 14
FuncT15	0-255		0	Function type 15
FuncT16	0-255		0	Function type 16
InfoNo01	0-255		0	Information number 1
InfoNo02	0-255		0	Information number 2
InfoNo03	0-255		0	Information number 3
InfoNo04	0-255		0	Information number 4
InfoNo05	0-255		0	Information number 5
InfoNo06	0-255		0	Information number 6
InfoNo07	0-255		0	Information number 7
InfoNo08	0-255		0	Information number 8
InfoNo09	0-255		0	Information number 9
InfoNo10	0-255		0	Information number 10
InfoNo11	0-255		0	Information number 11
InfoNo12	0-255		0	Information number 12
InfoNo13	0-255		0	Information number 13
InfoNo14	0-255		0	Information number 14
InfoNo15	0-255		0	Information number 15
InfoNo16	0-255		0	Information number 16
NAME01	0-13		Input1	Signal 1 user name 13 char. for disturbance presentations
NAME02	0-13		Input2	Signal 2 user name 13 char. for disturbance presentations
NAME03	0-13		Input3	Signal 3 user name 13 char. for disturbance presentations
NAME04	0-13		Input4	Signal 4 user name 13 char. for disturbance presentations
NAME05	0-13		Input5	Signal 5 user name 13 char. for disturbance presentations

Parameter	Range	Unit	Default	Parameter description
NAME06	0-13		Input6	Signal 6 user name 13 char. for disturbance presentations
NAME07	0-13		Input7	Signal 7 user name 13 char. for disturbance presentations
NAME08	0-13		Input8	Signal 8 user name 13 char. for disturbance presentations
NAME09	0-13		Input9	Signal 9 user name 13 char. for disturbance presentations
NAME10	0-13		Input10	Signal 10 user name 13 char. for disturbance presentations
NAME11	0-13		Input11	Signal 11 user name 13 char. for disturbance presentations
NAME12	0-13		Input12	Signal 12 user name 13 char. for disturbance presentations
NAME13	0-13		Input13	Signal 13 user name 13 char. for disturbance presentations
NAME14	0-13		Input14	Signal 14 user name 13 char. for disturbance presentations
NAME15	0-13		Input15	Signal 15 user name 13 char. for disturbance presentations
NAME16	0-13		Input16	Signal 16 user name 13 char. for disturbance presentations

1 Application

The indications from all the 48 selected binary signals are shown on the local human-machine interface (HMI) and on the Station Monitoring System (SMS) for each recorded disturbance in the disturbance report. The LEDs on the front of the terminal display start and trip indications.

2 Theory of operation

The indications shown on the HMI and SMS give an overview of the status of the 48 event signals during the fault. On the HMI, the indications for each recorded disturbance are presented at:

DisturbReport
Disturbances
Disturbance n (n=1-10)
Indications

All selected signals can be internally produced signals or emerge from binary input channels.

The indications are registered only during the fault time of a recorded disturbance, as long as any trigger condition is activated. A part or all of these indications can be automatically scrolled on the local HMI after a disturbance is recorded, until acknowledged with the C button on the HMI. They are selected with the indication mask.

The signal name for internal logical signals presented on the screen follows the signal name, which can be found in the signal list in each function description of this user's guide. Binary input signals are displayed with their user-defined names.

The LED indications display this information:

Green LED :

- Steady light In service
- Flashing light Internal fail, the INT--FAIL internal signal is high
- Dark No power supply

Yellow LED :

- Steady light A disturbance report is triggered
- Flashing light The terminal is in test mode or in configuration mode

Red LED :

- Steady light Trig on binary signal with HMI red LED option set.
- Flashing light The terminal is in configuration mode.

3 Setting

The signals to be displayed as indications are selected in the disturbance report setting. This can be found on the local HMI at:

Settings
DisturbReport
BinarySignals
Input n (n=1-48)

4 Testing

If TestMode is activated and TestMode/DisturbReport/ is set to ...		**Then the disturbances ...**
Operation = On	DisturbSummary = On or Off	Are stored as usual in the terminal.
Operation = Off	DisturbSummary = On	Summary scrolls. No indications. No storage of LED information.
Operation = Off	DisturbSummary = Off	Are not stored. LED information not stored.

1 Application

The aim of disturbance recording is to provide a means for better understanding of the behaviour of the power network and related primary and secondary equipment during and after a disturbance. An analysis of the recorded data provides valuable information that can be used to improve existing equipment. This information can also be used when planning for and designing new installations.

Most of the built-in disturbance recorders offered by various manufacturers operate only in connection with the operation of the protective functions and they have a very limited capacity for recording times and the number of recordings.

This is not the case with the disturbance recorders built into the REx 5xx terminals. These disturbance recorders are characterised by great flexibility as far as starting conditions and recording times, and large storage capacity are concerned. Thus, the disturbance recorders are not dependent on the operation of protective functions, and they can record disturbances that were not discovered by protective functions for one reason or another.

The disturbance recording function in the REx 5xx terminals is fully adequate for the recording of disturbances for the protected object.

1.1 Recording capacity

The recording function can record all analogue inputs in the transformer module and up to 48 binary signals. To maximise the use of the memory, the number of analogue channels to be recorded is user-selectable by programming and can be set individually for each analogue input. The recorded binary signals can be either true binary input signals or internal logical signals created by the protective functions.

1.2 Memory capacity

The maximum number of recordings stored in the memory is 10. So depending on the set recording times and the recording of the enabled number of channels, the memory can contain a minimum of six and a maximum of 10 disturbance recordings comprising of both header part and data part. But the header part for the last 10 recordings is always available.

1.3 Recording times

The recording times for the pre- and post-fault period, tPre and tPost, are user-programmable with wide setting ranges.

To avoid uncontrolled recording and subsequent erasing of previous recordings, in case a trigger should not reset within a reasonable time, a limit time, tLim, can be set to limit the total duration of a recording.

1.4 Triggers

Any of the recorded binary signals can be programmed to act as a trigger. The analogue channels have programmable threshold levels for triggering. Both overlevels and underlevels are available. Manual triggering is also available. This provides a convenient test possibility.

1.5 Time tagging

The terminal has a built-in, real-time clock and calendar. This function is used for time tagging of the recorded disturbances. The time tagging refers to the activation of the trigger that starts the disturbance recording.

2 Theory of operation

Disturbance recording is based on the continuous collection of network data, currents and binary signals, in a cyclic buffer. The buffer operates according to the FIFO principle, old data will be overwritten as new data arrives when the buffer is full. The size of this buffer is determined by the set pre-fault recording time.

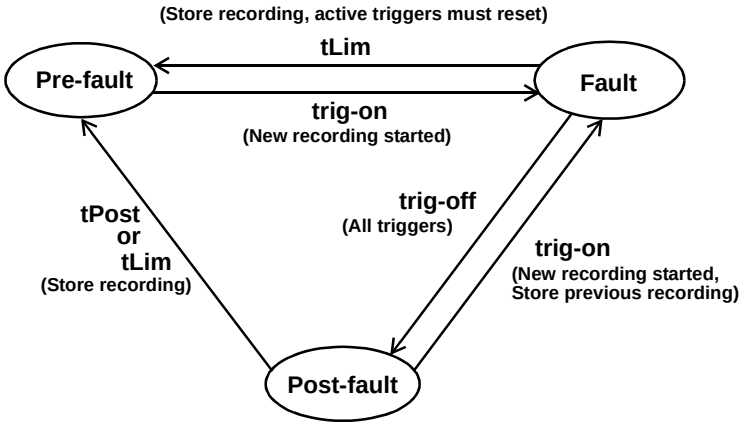

Figure 1: State transition diagram governing the recording modes.

Upon detection of a fault condition (triggering), the data storage continues in another part of the memory. The storing goes on as long as the fault condition prevails - plus a certain additional time. The length of this additional part is called the post-fault time and it can be set in the disturbance recorder. The above mentioned two parts form a disturbance recording. The whole memory acts as a cyclic buffer and when it is full, the oldest recording is overwritten.

The recordings can be retrieved to the PC with RECOM, the data collection software, and analysed and evaluated manually by using the REVAL evaluation software, which is also used for printouts of recorded disturbances. For automatic evaluation of the recordings, the RESDA software package is available.

The recordings can be divided into two parts, the header and the data part. The data part contains the numerical values for the recorded analogue and binary channels. The header contains clearly written basic information on the disturbance. A part of this information is also used by REVAL to reproduce the analogue and binary signals in a correct and user-friendly way. Such information is, primary and secondary instrument transformer ratings.

This information is included in the header:

Table 1: Contents of the header

Type of information Parameter	Stored in parameter database	Stored with disturbance
General		
Station, object & unit ID	x	-
Date and time	-	x
Sequence number	-	x
CT earthing	x	-
Time synchronisation source	x	-
Recording times tPre, tPost, tLim	-	x
Pre-fault Uph-ph, I (RMS)	-	x
Trig signal and test mode flag	-	x
Analogue signals		
Signal name	x	-
Primary and secondary instr. transformer rating	x	-
Undertrig: level and operation	x	-
Overtrig: level and operation	x	-
Undertrig status at time of trig	-	x
Overtrig status at time of trig	-	x
Instantaneous Uph-0 at time of trig	-	x
Instantaneous Iph-0 at time of trig	-	x
Uph-0/Iph-0 (RMS) before trig (pre-fault)	-	x
Uph-0/Iph-0 (RMS) after trig (fault)	-	x
Binary signals		

Table 1: Contents of the header

Type of information Parameter	Stored in parameter database	Stored with disturbance
Signal name	-	x
Type of contact (trig level)	x	-
Trig operation	x	-
Signal status at time of trig	-	x
Trig status at time of trig	-	x

Table 1 is a summary. For detailed information, see the "*User's Guide for REVAL*".

3 Design

The disturbance recording function is an optional function in the REx 5xx terminals. The processing of analogue signals is handled by a dedicated DSP (digital signal processor). Other functions are implemented in the main CPU. The memory is shared with other functions.

The numerical signals coming from the A/D conversion module in serial form are converted to parallel form in a dedicated DSP. The analogue trig conditions are also checked in the DSP.

A check of the start conditions is performed by searching for a maximum value. This is a positive peak. The function also seeks a minimum value, which is the negative peak.

When this is found, the absolute average value is calculated. If this value is above the set threshold level for the *overfunction* on the channel in question, an *overfunction* start on that channel is indicated. The *overfunction* is indicated with a greater than (>) sign.

Similarly, if the average value is below the set threshold level for *underfunction* on the channel in question, an *underfunction* start on that channel is indicated. The *underfunction* is indicated with a less than (<) sign.

The procedure is separately performed for each channel. This method of checking the analogue start conditions gives a function that is insensitive to DC offset in the signal. The operating time for this start is typically in the range of one cycle, 20 ms in a 50 Hz network.

The numerical data, along with the result of the trigger condition evaluation, are transmitted to the main CPU. The main CPU handles these functions:

- Evaluation of the manual start condition
- Evaluation of the binary start condition, both for true binary input signals and for internally created logical signals
- Storage of the numerical values for the analogue channels

The numerical data for the analogue channels are stored in a cyclic pre-fault buffer in a RAM. When a trigger is activated, the data storage is moved to another area in the RAM, where the data for the fault and the subsequent post-fault period are stored. Thus, a complete disturbance recording comprises the stored data for the pre-fault, fault, and post-fault period.

The RAM area for temporary storage of recorded data is divided into sub-areas, one for each recording. The size of a subarea is governed by the sum of the set pre-fault (tPre) and maximum post-triggering (tLim) time. There is a sufficient memory capacity for at least four consecutive recordings with a maximum number of analogue channels recorded and with maximum time settings. Should no such area be free at the time of a new triggering, the oldest recording stored in the RAM is overwritten.

When a recording is completed, a post recording processing occurs.

This post-recording processing comprises:

- Merging the data for analogue channels with corresponding data for binary signals stored in an event buffer
- Compression of the data, which is performed without losing any data accuracy
- Storing the compressed data in a non-volatile memory (flash memory)

The recorded disturbance is now ready for retrieval and evaluation. The recording comprises the stored and time-tagged disturbance data along with relevant data from the database for configuration and parameter set-up.

Some parameters in the header of a recording are stored with the recording, and some are retrieved from the parameter database in connection with a disturbance. Table 1 indicates where the various parameters are stored. This means that if a parameter that is retrieved from the parameter database was changed between the time of recording and retrieval, the collected information is not correct in all parts. For this reason, all recordings should be transferred to the Station Monitoring System (SMS) workstation and then deleted in the terminal before any such parameters are changed.

4 Setting

The setting parameters specific for the disturbance recording function are available in the menu tree under:

Settings
- **DisturbReport**
  - **Operation**
  - **SequenceNo**
  - **RecordingTimes**
  - **BinarySignals**
  - **AnalogSignals**

The list of parameters in the appendix attached to the document “Disturbance report - Settings”, explains the meaning of the abbreviations used in connection with setting ranges.

Remember that values of parameters set elsewhere in the menu tree are linked to the information on a recording. Such parameters are, for example, station and object identifiers, CT and PT ratios.

The sequence number of the recordings is a specific parameter for the disturbance recorder and is used to identify the different recordings. By combining the date and the sequence number for a recording, the recording can be uniquely identified. The sequence number is also shown under:

ServiceReport
- **DisturbReport**
  - **SequenceNo**

The read value on the local human-machine interface (HMI) display is the sequence number that the next recorded disturbance receives. The number is automatically increased by one for each new recording and is reset to zero at each midnight. The sequence number can also be set manually.

5 Testing

Evaluation of the results from the disturbance recording function requires access to an SMS workstation either permanently connected to the terminal or temporarily connected to the serial port on the front. The following software packages must be installed in the workstation:

Package:	**For:**
SMS-BASE	Common functions
RECOM	Collection of the disturbance data
REVAL	Evaluation and printouts of the recorded data

It could be useful to have a printer for hard copies. The behavior of the disturbance recording function can be checked when protective functions of the terminal are tested.

When the terminal is set to operate in test mode, there is a separate setting for operation of the disturbance report, which also affects the disturbance recorder.

A manual trig can be started any time. This results in a *snap-shot* of the actual values of all recorded channels.

1 Application

When using a front-connected PC or Station Monitoring System (SMS), an event list can be available for each of the recorded disturbances in the disturbance report. Each list can contain up to 150 time-tagged events. These events are logged during the total recording time, which depends on the set recording times (pre-fault, post-fault and limit time) and the actual fault time. During this time, the first 150 events for all the 48 selected binary signals are logged and time tagged. This list is a useful instrument for evaluating a fault and is a complement to the disturbance recorder.

To obtain this event list, the event recorder function (basic in some terminals and optional in others) must be installed.

2 Theory of operation

When one of the trig conditions for the disturbance report is activated, the events are collected by the main processing unit, from the 48 selected binary signals. The events can come from both internal logical signals and binary input channels. The internal signals are time tagged in the main processing module, while the binary input channels are time tagged directly on each I/O module. The events are collected during the total recording time, *tRecording*, and they are stored in the disturbance report memory at the end of each recording.

The name of the binary input signal that appears in the event list is the user-defined name that can be programmed in the terminal.

The time tagging of events emerging from internal logical signals and binary input channels have a resolution of 1 ms.

3 Setting

The settings of the event recorder consist of the signal selection and the recording times. It is possible to select up to 48 binary signals, either internal signals or signals coming from binary input channels. These signals coincide with the binary signals recorded by the disturbance recorder. The disturbance summary indications that are to scroll automatically on the local human-machine interface (HMI), can only be selected from these 48 event channels.

The signal selection is found at:

Settings
DisturbReport
BinarySignals
Input n (n=1-48)

Each of the up to 48 event channels can be selected from the signal list, consisting of all available internal logical signals and all binary input channels.

For each of the binary input and output signals, a user-defined name can be programmed at:

Configuration
I/O
Slotnn-XXXX (ex. Slot15-BOM3)

4 Testing

During testing, the event recorder can be switched off if desired. This is found in the SMS or Substation Control System (SCS).

1 Application

The main objective of line protection and monitoring terminals is fast, selective and reliable operation for faults on a protected object. Besides this, information on the values of the currents and voltages before and during the fault is valuable to understand the severity of the fault.

The trip value recorder in the REx 5xx series of terminals provides this information. The function is an optional software module in the terminal.

The function calculates the pre-fault and fault values of currents and voltages and presents them as phasors with amplitude and argument.

2 Design

Pre-fault and fault phasors of currents and voltages are filtered from disturbance data stored in digital sample buffers.

When the disturbance report function is triggered, the trip value recorder function starts to calculate the frequency of the analogue channel U1. If the calculation fails, a default frequency is read from database to ensure further execution of the function.

Then the sample for the fault interception is looked for by checking the non-periodic changes. The channel search order is U1, U2, U3, I1, I2, I3, I4, I5 and U5.

If no error sample is found, the trig sample is used as the start sample for the Fourier estimation of the complex values of currents and voltages. The estimation uses samples during one period before the trig sample. In this case the calculated values are used both as pre-fault and fault values.

If an error sample is found the Fourier estimation of the prefault values starts 1.5 period before the fault sample. The estimation uses samples during one period. The postfault values are calculated using the Recursive Least Squares (RLS) method. The calculation starts a few samples after the fault sample and uses samples during 1/2 - 2 periods depending on the shape of the signals.

The pre-fault time (tPre) should be at least 0.1 s to ensure enough samples for the estimation of pre-fault trip values.

3 Displaying pre-fault and fault phasors of the currents and voltages

When the Trip value recorder function is built into the REx 5xx terminals, it records and displays:

- The pre-fault phasors
- The fault phasors

Figure 1: shows typical examples of the corresponding data windows. The appendix in this document contains explanations of the different parameter names.

```
.TripVal/PreFlt
U1=
57.35 kV
     0.00 deg
```

a)

```
.TripVal/Flt
I1=
4560 A
     87.0 deg
```

b)

Figure 1: Typical data windows, which display the phasors of voltages and currents.

The phasors of the pre-fault and fault voltages and currents are available under the menu:

DisturbReport
Disturbances
Disturbance n (n=1-10)
TripValues
PreFault (Fault)

Figure 1:a and 1b shows typical data windows. The first row indicates if the pre-fault or the fault value of the phasor is presented. The name of the phasor is located in the second row. Its RMS value appears in the third row, while the fourth row displays information about the relative phase position compared, as a reference, to the voltage in the L1 phase.

3.1 Setting of the user-defined names for phasors

Customer specific names for all the ten analogue inputs (five currents and five voltages) can be entered. Each name can have up to 13 alphanumeric characters. These names are common for all functions within the disturbance report functionality. See the document "*Terminal identification*" for further description and settings of the analogue inputs.

The user-defined names for the analogue inputs are set under the menu:

Configuration
AnalogInputs
U1 (U2..U5, I1..I5)

4 Appendix

Table 1: List of phasors

Default parameter:	Description:
	Phasors of the pre-fault primary voltages and currents for the disturbance n = 1 to 10; **Menu tree:** Disturb.Report—Disturbances—Disturbance n—TripValues—PreFault
U1	Phase value of the phase L1 voltage—RMS value and relative phase angle
U2	Phase value of the phase L2 voltage—RMS value and relative phase angle
U3	Phase value of the phase L3 voltage—RMS value and relative phase angle
U4	Residual voltage 3Uo—RMS value and relative phase angle
U5	Phase value of the busbar voltage, used for the purposes of synchro-check and dead-line-check function—RMS value and relative phase angle
I1	Phase value of the phase L1 current—RMS value and relative-phase angle
I2	Phase value of the phase L2 current—RMS value and relative-phase angle
I3	Phase value of the phase L3 current—RMS value and relative-phase angle
I4	Residual current 3Io - RMS value and relative-phase angle
I5	Residual current 3Io from the parallel line for the fault location function only—RMS value and relative-phase angle
Frequency	Frequency before the disturbance
	Phasors of the fault primary voltages and currents for the disturbance n = 1 to 10; **Menu tree:** Disturb.Report—Disturbances—Disturbance n—TripValues—Fault
U1	Phase value of the phase L1 voltage—RMS value and relative-phase angle
U2	Phase value of the phase L2 voltage—RMS value and relative-phase angle
U3	Phase value of the phase L3 voltage—RMS value and relative-phase angle
U4	Residual voltage 3Uo—RMS value and relative phase angle
U5	Phase value of the busbar voltage, used for the purposes of synchro-check and dead-line-check function—RMS value and relative phase angle
I1	Phase value of the phase L1 current—RMS value and relative-phase angle
I2	Phase value of the phase L2 current—RMS value and relative-phase angle
I3	Phase value of the phase L3 current—RMS value and relative-phase angle
I4	Residual current 3Io—RMS value and relative-phase angle
I5	Residual current 3Io from the parallel line for the purposes of a fault location function only—RMS value and relative-phase angle

1 Application

Fast, reliable supervision of different analogue quantities is of vital importance during the normal operation of a power system.

Operators in the control centres can, for example:

- Continuously follow active and reactive power flow in the network
- Supervise the busbar voltage level and frequency

Different measuring methods are available for different quantities. Current and voltage instrument transformers provide the basic information on measured phase currents and voltages in different points within the power system. At the same time, currents and voltages serve as the input measuring quantities to power and energy meters, protective devices and so on.

Further processing of this information occurs within different control, protection, and monitoring terminals and within the higher hierarchical systems in the secondary power system.

The REx 5xx protection, control, and monitoring terminals have a built-in option to measure and further process information about up to five input currents and five input voltages. The number of processed alternate measuring quantities depends on the type of terminal and built-in options. Additional information are also available:

- Mean values of measured currents I in the first, three current-measuring channels
- Mean values of measured voltages U in the first, three voltage-measuring channels
- Three-phase active power P as measured by the first, three current- and voltage-measuring channels
- Three-phase reactive power Q as measured by the first, three current- and voltage-measuring channels
- Frequency f

The accuracy of measurement depends on the requirements. Basic accuracy satisfies the operating (information) needs. An additional calibration of measuring channels is necessary and must be ordered separately when the requirements on accuracy of the measurement are higher. Refer to the technical data and ordering particulars, for the particular terminal.

The information on measured quantities are then available to the user on different locations:

- Locally by means of the local human-machine interface (HMI) unit
- Locally by means of a front-connected personal computer (PC)
- Remotely over the LON bus to the station control system (SCS)
- Remotely over the SPA port to the station monitoring system (SMS)

1.1 User-defined measuring ranges

Each measuring channel has an independent measuring range from the others. This allows the users to select the most suitable measuring range for each measuring quantity on each monitored object of the power system. In doing so, they optimize the functionality of the power system.

1.2 Continuous monitoring of the measured quantity

Users can continuously monitor the measured quantity in each channel by means of four built-in operating thresholds (figure 1). The monitors operate in two different modes of operation:

- Overfunction, when the measured current exceeds the **HiWarn** or **HiAlarm** pre-set values
- Underfunction, when the measured current decreases under the **LowWarn** or **LowAlarm** pre-set values

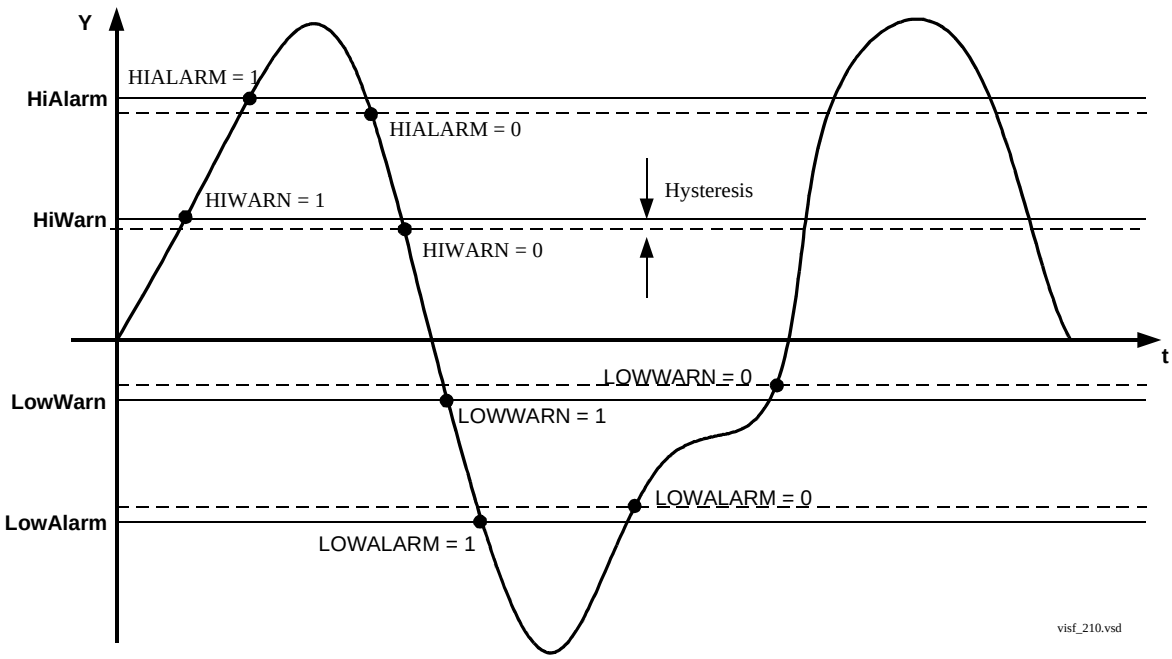

Figure 1: Presentation of the operating limits

Each operating level has its corresponding functional output signal:

- HIWARN
- HIALARM
- LOWWARN
- LOWALARM

The logical value of the functional output signals changes according to figure 1.

The user can set the hysteresis, which determines the difference between the operating and reset value at each operating point, in wide range for each measuring channel separately. The hysteresis is common for all operating values within one channel.

1.3 Continuous supervision of the measured quantity

The actual value of the measured quantity is available locally and remotely. The measurement is continuous for each channel separately, but the reporting of the value to the higher levels (control processor in the unit, HMI and SCS) depends on the selected reporting mode. The following basic reporting modes are available:

- Periodic reporting
- Periodic reporting with dead-band supervision in parallel
- Periodic reporting with dead-band supervision in series
- Dead-band reporting

Users can select between two types of dead-band supervision:

- Amplitude dead-band supervision (ADBS)
- Integrating dead-band supervision (IDBS)

1.3.1 Amplitude dead-band supervision

If the changed value —compared to the last reported value— is larger than the ± ΔY predefined limits that are set by users, and if this is detected by a new measuring sample, then the measuring channel reports the new value to a higher level. This limits the information flow to a minimum necessary. Figure 2 shows an example of periodic reporting with the amplitude dead-band supervision. The picture is simplified: the process is not continuous but the values are evaluated with a time interval of one second from each others.

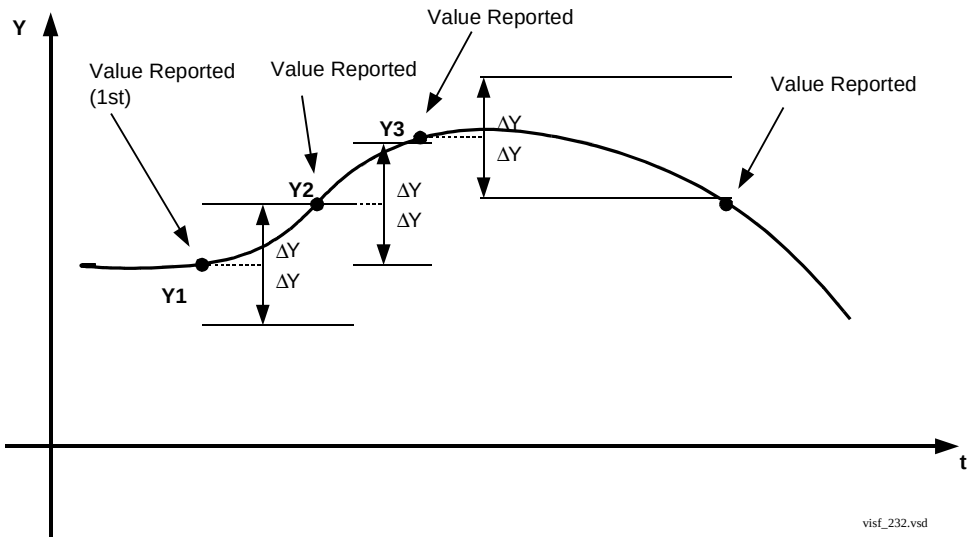

Figure 2: Amplitude dead-band supervision reporting

After the new value is reported, the new ± ΔY limits for dead-band are automatically set around it. The new value is reported only if the measured quantity changes more than defined by the new ±ΔY set limits.

1.3.2 Integrating dead-band supervision

The measured value is updated if the time integral of all changes exceeds the pre-set limit (figure 3), where an example of reporting with integrating dead-band supervision is shown. The picture is simplified: the process is not continuous but the values are evaluated with a time interval of one second from each others.

The last value reported (Y1 in figure 3) serves as a basic value for further measurement. A difference is calculated between the last reported and the newly measured value during new sample and is multiplied by the time increment (discrete integral). The absolute values of these products are added until the pre-set value is exceeded. This occurs with the value Y2 that is reported and set as a new base for the following measurements (as well as for the values Y3, Y4 and Y5).

The integrating dead-band supervision is particularly suitable for monitoring signals with low variations that can last for relatively long periods.

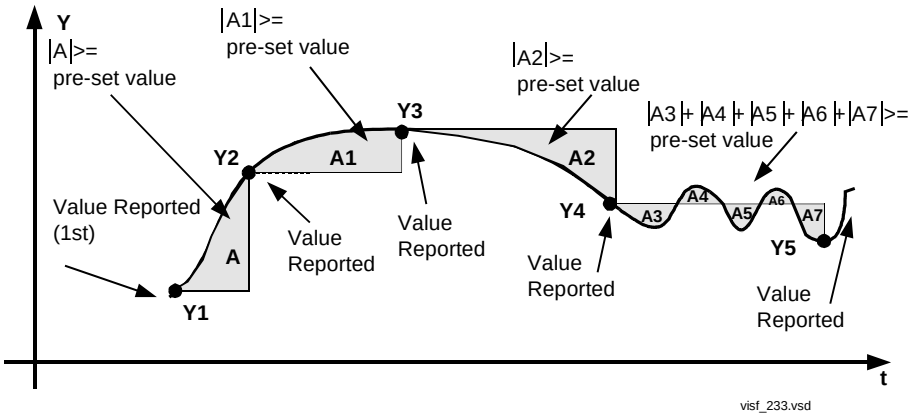

Figure 3: Reporting with integrating dead-band supervision

1.3.3 Periodic reporting

The user can select the periodic reporting of measured value in time intervals between 1 and 3600 s. The measuring channel reports the value even if it has not changed for more than the set limits of amplitude or integrating dead-band supervision. To disable periodic reporting, set the reporting time interval to 0 s (figure 4).

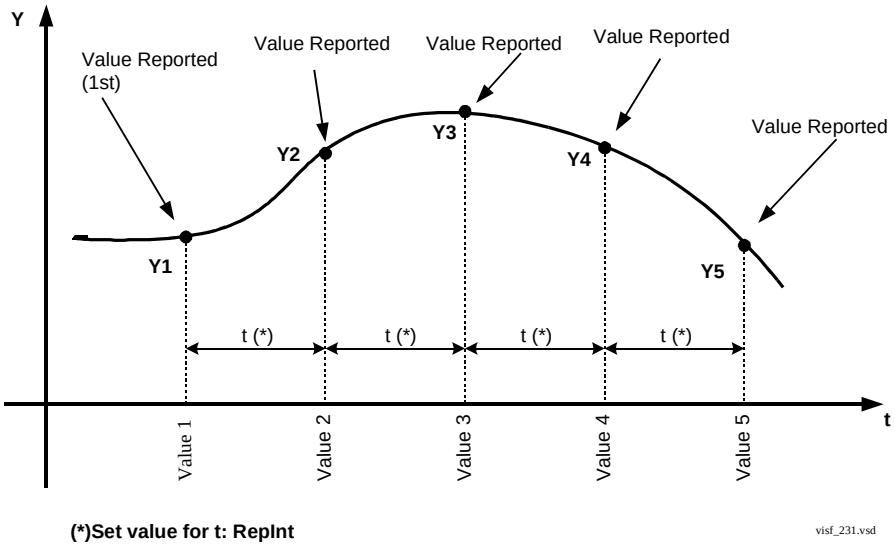

Figure 4: Periodic reporting

1.3.4 Periodic reporting with parallel dead-band supervision

The newly measured value is reported:

- After each time interval for the periodic reporting expired, **OR**
- When the new value is detected by the dead-band supervision function

The amplitude dead-band and the integrating dead-band can be selected. The periodic reporting can be set in time intervals between 1 and 3600 seconds.

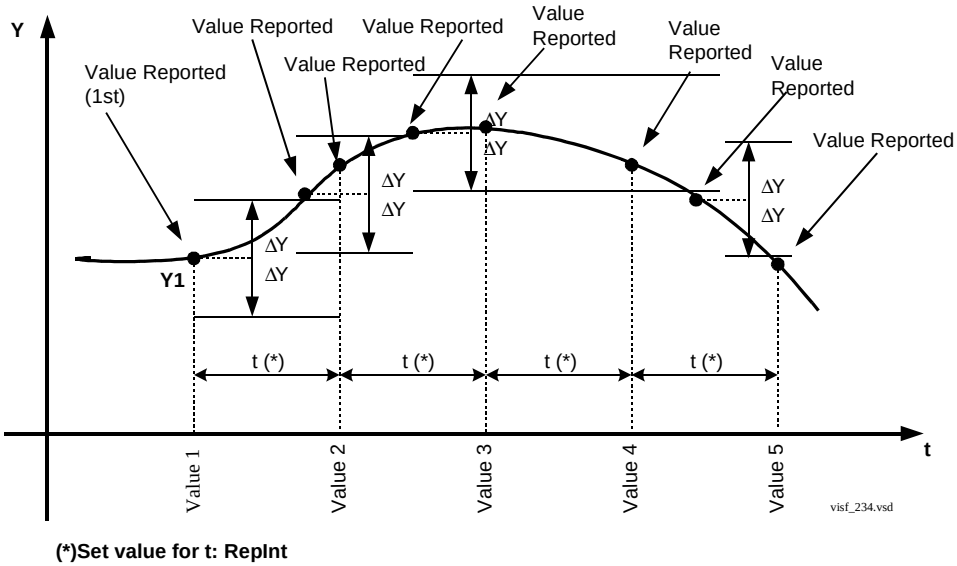

Figure 5: Periodic reporting with amplitude dead-band supervision in parallel

1.3.5 Periodic reporting with serial dead-band supervision

Periodic reporting can operate serially with the dead-band supervision. This means that the new value is reported only if the set time period expired **AND** if the dead-band limit was exceeded during the observed

time (figures 6 and 7). The amplitude dead-band and the integrating dead-band can be selected. The periodic reporting can be set in time intervals between 1 and 3600 seconds.

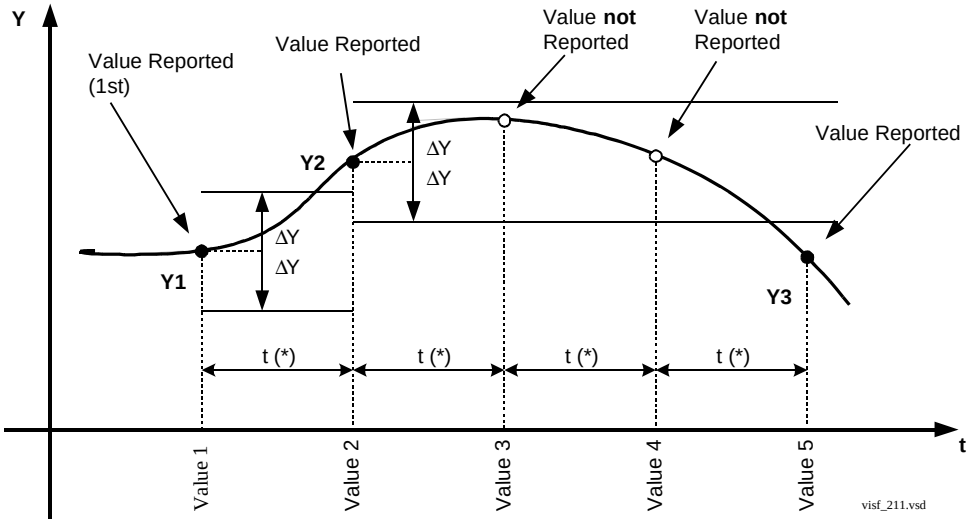

(*)Set value for t: RepInt

Figure 6: Periodic reporting with amplitude dead-band supervision in series

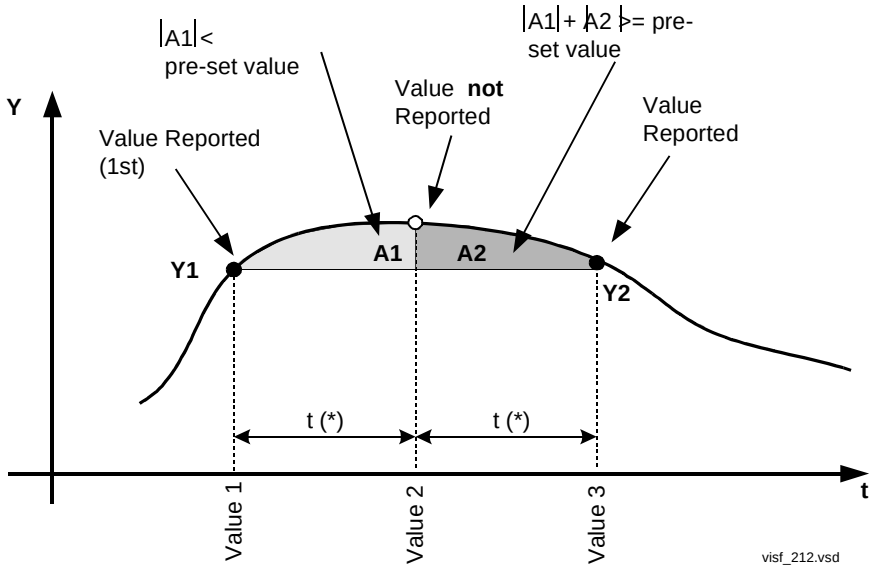

(*)Set value for t: RepInt

Figure 7: Periodic reporting with integrating dead-band supervision in series

1.3.6 Combination of periodic reportings

The reporting of the new value depends on setting parameters for the dead-band and for the periodic reporting. Table 1 presents the dependence between different settings and the type of reporting for the new value of a measured quantity.

Table 1: Dependence of reporting on different setting parameters:

EnDeadB*	EnIDeadB*	EnDeadBP*	RepInt*	Reporting of the new value
Off	Off	Off	0	No measured values is reported
Off	On	On	t>0	The new measured value is reported only if the time t period expired and if, during this time, the integrating dead-band limits were exceeded (periodic reporting with integrating dead-band supervision in series)
On	Off	On	t>0	The new measured value is reported only if the time t period has expired and if, during this time, the amplitude dead-band limits were exceeded (periodic reporting with amplitude dead-band supervision in series)
On	On	On	t>0	The new measured value is reported only if the time t period expired and if at least one of the dead-band limits were exceeded (periodic reporting with dead-band supervision in series)
Off	On	Off	0	The new measured value is reported only when the integrated dead-band limits are exceeded
On	Off	Off	0	The new measured value is reported only when the amplitude dead-band limits were exceeded
On	On	Off	0	The new measured value is reported only if one of the dead-band limits was exceeded
x	x	Off	t>0	The new measured value is updated at least after the time t period expired. If the dead-band supervision is additionally selected, the updating also occurs when the corresponding dead-band limit was exceeded (periodic reporting with parallel dead-band supervision)

* please, refer to the setting table for the explanation

2 Theory of operation and Design

The design of the alternating quantities measuring function follows the design of all REx 5xx-series protection, control, and monitoring terminals that have distributed functionality, where the decision levels are placed as closely as possible to the process.

The measuring function uses the same input current and voltage signals as other protection and monitoring functions within the terminals (figure 8 on page 596). The number of input current and voltage transformers depends on the type of terminal and options included. The maximum possible configuration comprises five current and five voltage input channels.

Measured input currents and voltages are first filtered in analogue filters and then converted to numerical information by an A/D converter, which operates with a sampling frequency of 2 kHz.

The numerical information on measured currents and voltages continues over a serial link to one of the built-in digital signal processors (DSP). An additional Fourier filter numerically filters the received information, and the DSP calculates the corresponding values for the following quantities:

- Five input measured voltages (U1, U2, U3, U4, U5). RMS values
- Five input measured currents (I1, I2, I3, I4, I5). RMS Values
- Mean RMS value, U, of the three phase-to-phase voltages calculated from the first three phase-to-earth voltages U1, U2 and U3
- Mean RMS value, I, of the first three measured RMS values I1, I2, and I3
- Three-phase active power, P, related to the first three measured currents and voltages (I1, U1, I2, U2, I3, U3)
- Three-phase, reactive power, Q, related to the first three measured currents and voltages (I1, U1, I2, U2, I3, U3)
- Mean value of frequencies, f, as measured with voltages U1, U2, and U3

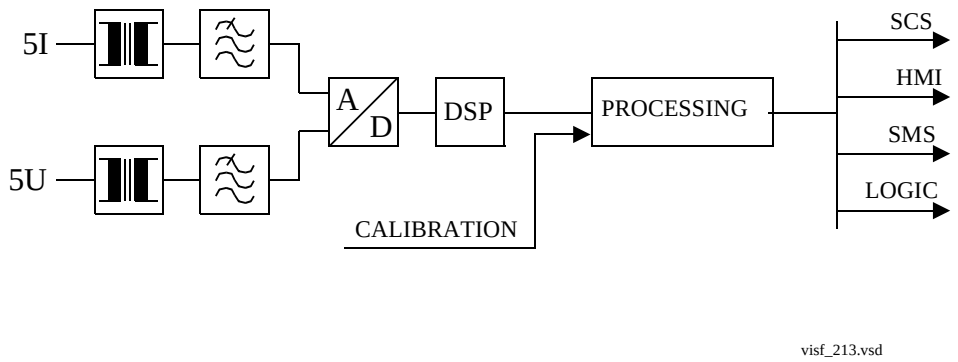

Figure 8: Simplified diagram for the function

This information is available to the user for operational purposes.

3 Setting instructions

The basic terminal parameters can be set from the HMI under the submenu:

Configuration
AnalogInputs
General
fr, CTEarth

So users can determine the rated parameters for the terminal:

- Rated frequency fr
- Position of the earthing point of the main CTs (CTEarth), which determines whether the CT earthing point is towards the protected object or the busbar.

The other basic terminal parameters, related to any single analog input, can be set under the submenu:

Configuration
AnalogInputs
U1, U2, U3, U4, U5, I1, I2, I3, I4, I5, U, I, P, Q, f

So the users can determine the base values, the primary CTs and VTs ratios, and the user-defined names for the analog inputs of the terminal.

Under U1:

- ac voltage base value for analog input U1: U1b
- voltage transformer input U1 nominal primary to secondary scale value: U1Scale
- Name (of up to 13 characters) of the analog input U1: Name

Under U2:

- ac voltage base value for analog input U2: U2b
- voltage transformer input U2 nominal primary to secondary scale value: U2Scale
- Name (of up to 13 characters) of the analog input U2: Name

Under U3:

- ac voltage base value for analog input U3: U3b
- voltage transformer input U3 nominal primary to secondary scale value: U3Scale
- Name (of up to 13 characters) of the analog input U3: Name

Under U4:

- ac voltage base value for analog input U4: U4b
- voltage transformer input U4 nominal primary to secondary scale value: U4Scale
- Name (of up to 13 characters) of the analog input U4: Name

Under U5:

- ac voltage base value for analog input U5: U5b
- voltage transformer input U5 nominal primary to secondary scale value: U5Scale
- Name (of up to 13 characters) of the analog input U5: Name

Under I1:

- ac current base value for analog input I1: I1b
- current transformer input I1 nominal primary to secondary scale value: I1Scale
- Name (of up to 13 characters) of the analog input I1: Name

Under I2:

- ac current base value for analog input I2: I2b
- current transformer input I2 nominal primary to secondary scale value: I2Scale
- Name (of up to 13 characters) of the analog input I2: Name

Under I3:

- ac current base value for analog input I3: I3b
- current transformer input I3 nominal primary to secondary scale value: I3Scale
- Name (up to 13 characters) of the analog input I3: Name

Under I4:

- ac current base value for analog input I4: I4b
- current transformer input I4 nominal primary to secondary scale value: I4Scale
- Name (of up to 13 characters) of the analog input I4: Name

Under I5:

- ac current base value for analog input I5: I5b
- current transformer input I5 nominal primary to secondary scale value: I5Scale
- Name (up to 13 characters) of the analog input I5: Name

Under U:

- Name (up to 13 characters) of the phase to phase voltage U: Name

Under I:

- Name (up to 13 characters) of the average current I: Name

Under P:

- Name (up to 13 characters) of the active power P: Name

Under Q:

- Name (up to 13 characters) of the reactive power Q: Name

Under f:

- Name (up to 13 characters) of the frequency value f: Name

The names of the first 10 quantities automatically appears in the REVAL evaluation program for each reported disturbance.

SMS and the CAP 531 configuration tool have to be used in order to set all remaining parameters that are related to different alternating measuring quantities.

In the settings menu it is possible to set all monitoring operating values and the hysteresis directly in the basic units of the measured quantities for each channel and for each quantity:

Settings
DisturbReport
AnalogSignals

The dead-band limits can be set directly in the corresponding units of the observed quantity for the:

- Amplitude dead-band supervision (ADBS)
- Integrating dead-band supervision (IDBS)

The IDBS area is defined by the following formula:

$$IDBS = \frac{IDeadB}{ReadFreq} = IDeadB \cdot ts \qquad \text{(Equation 1)}$$

where:

$IDeadB$ is a set operating value for IDBS in corresponding unit

$ReadFreq$ is the reading frequency. It has a constant value of 1Hz

$ts = \frac{1}{ReadFreq}$ is the time between two samples (fixed to 1s).

The setting value for IDBS is IDeadB, and is expressed in the measuring unit of the monitored quantity (kV, A, MW, Mvar or Hz). The value is reported if the time integral area is greater than the value IDBS.

If a 0.1 Hz variation in the frequency for 10 minutes (600 s) is the event that should cause the reporting of the frequency monitored value, than the set value for IDeadB is 60 Hz.

The hysteresis can be set under the setting Hysteres.

Alarm and warning thresholds have to be set respectively under the settings HiAlarm (LowAlarm) and HiWarn (LowWarn).

The setting table lists all the setting parameters.

Note: It is important to set the time for periodic reporting and deadband in an optimised way to minimise the load on the station bus.

4 Testing

Stabilized ac current and voltage generators and corresponding current, voltage, power and frequency meters with very high accuracy are necessary for testing the alternating quantity measuring function. The operating ranges of the generators must correspond to the rated alternate current and voltage of each terminal.

Connect the generators and instruments to the corresponding input terminals of a unit under test. Check that the values presented on the HMI unit correspond to the magnitude of input measured quantities within the limits of declared accuracy. The mean service values are available under the submenu:

Service Report
ServiceValues

The phasors of up to five input currents and voltages are available under the submenu:

Service Report
Phasors
Primary

The operation of ADBS or IDBS function can be checked separately with the RepInt = 0 setting. The value on the HMI follows the changes in the input measuring quantity continuously.

Configure the monitoring output signals (see the signal list) to the corresponding output relays. Check the operating monitoring levels by changing the magnitude of input quantities and observing the operation of the corresponding output relays.

The output contact changes its state when the changes in the input measuring quantity are higher than the set values HIWARN, HIALARM, or lower than the set values LOWWARN, LOWALARM.

5 Appendix

5.1 Function block

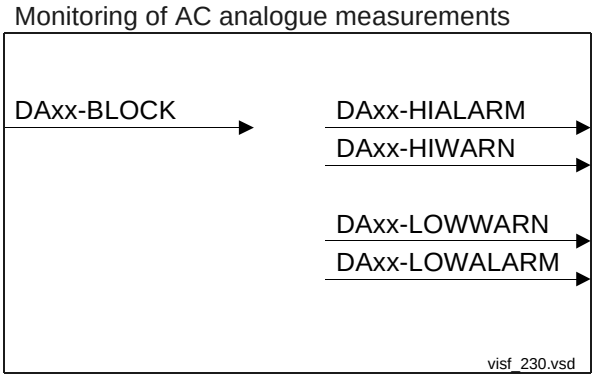

5.2 Signal list

Table 2:

Block	Signal	Type	Description
DAxx-	BLOCK	IN	Block updating of value for U1
DAxx-	HIALARM	OUT	High Alarm U1
DAxx-	HIWARN	OUT	High Warning U1
DAxx-	LOWALARM	OUT	Low Alarm U1
DAxx-	LOWWARN	OUT	Low Warning U1

*1) The xx within the signal name corresponds to the following measuring quantities:

xx = 01 input measuring voltage U1

xx = 02 input measuring voltage U2

xx = 03 input measuring voltage U3

xx = 04 input measuring voltage U4

xx = 05 input measuring voltage U5

xx = 06 input measuring current I1

xx = 07 input measuring current I2

xx = 08 input measuring current I3

xx = 09 input measuring current I4

xx = 10 input measuring current I5

xx = 11 mean value U of the three phase to phase voltages calculated from the first three phase voltages U1, U2 and U3

xx = 12 mean value I of first three currents I1, I2 and I3

xx = 13 three phase active power P measured by first three voltage and current inputs

xx = 14 three phase reactive power Q measured by first three voltage and current inputs

xx = 15 mean value of frequency f as measured by first three voltage inputs U1, U2 and U3

5.3 Setting table

Table 3:

Parameter	Range	Unit	Default	Parameter description
				For each voltage input channels U1 - U5:
Operation	Off, On		Off	Direct Analogue Input U1 - U5 Off/On
Hysteres	0.0-1999.9	kV	5.0	Alarm hysteresis for U1 - U5 in kV
EnAlRem	Off, On		On	Immediate event when an alarm is disabled for U1 - U5 (produces an immediate event at reset of any alarm monitoring element, when On)

Table 3:

Parameter	Range	Unit	Default	Parameter description
EnAlarms	Off, On		On	Set to 'On' to activate alarm supervision for U1 - U5 (produces an immediate event at operation of any alarm monitoring element, when On)
HiAlarm	0.0-1999.9	kV	220.0	High Alarm level for U1 - U5 in kV
HiWarn	0.0-1999.9	kV	210.0	High Warning level for U1 - U5 in kV
LowWarn	0.0-1999.9	kV	170.0	Low Warning level for U1 - U5 in kV
LowAlarm	0.0-1999.9	kV	160.0	Low Alarm level for U1 - U5 in kV
RepInt	0-3600	s	0	Time between reports for U1 - U5 in seconds. Zero = Off (duration of time interval between two reports at periodic reporting function. Setting to 0 disables the periodic reporting)
EnDeadB	Off, On		Off	Enable amplitude dead band supervision for U1 - U5
DeadBand	0.0-1999.9	kV	5.0	Amplitude dead band for U1 - U5 in kV
EnIDeadB	Off, On		Off	Enable integrating dead band supervision for U1 - U5
IDeadB	0.0-1999.9	kV	10.0	Integrating dead band for U1 - U5 in kV
EnDeadBP	Off, On		Off	Enable periodic dead band reporting U1 - U5
				For each voltage input channels I1 - I5:
Operation	Off, On		Off	Direct Analogue Input I1 - I5 Off/On
Hysteres	0-99999	A	50	Alarm hysteresis for I1 - I5 in A
EnAlRem	Off, On		On	Immediate event when an alarm is disabled for I1 - I5 (produces an immediate event at reset of any alarm monitoring element, when On)
EnAlarms	Off, On		Off	Set to 'On' to activate alarm supervision for I1 - I5 (produces an immediate event at operation of any alarm monitoring element, when On)
HiAlarm	0-99999	A	900	High Alarm level for I1 - I5 in A
HiWarn	0-99999	A	800	High Warning level for I1 - I5 in A
LowWarn	0-99999	A	200	Low Warning level for I1 - I5 in A
LowAlarm	0-99999	A	100	Low Alarm level for I1 - I5 in A
RepInt	0-3600	s	0	Time between reports for I1 - I5 in seconds. Zero = Off (duration of time interval between two reports at periodic reporting function. Setting to 0 disables the periodic reporting)
EnDeadB	Off, On		Off	Enable amplitude dead band supervision for I1 - I5
DeadBand	0-99999	A	50	Amplitude dead band for I1 - I5 in A
EnIDeadB	Off, On		Off	Enable integrating dead band supervision for I1 - I5
IDeadB	0-99999	A	10000	Integrating dead band for I1 - I5 in A
EnDeadBP	Off, On		Off	Enable periodic dead band reporting I1 - I5
				Mean phase-to-phase voltage measuring channel U:
Operation	Off, On		Off	Direct Analogue Input U Off/On
Hysteres	0.0-1999.9	kV	5.0	Alarm hysteresis for U in kV

Table 3:

Parameter	Range	Unit	Default	Parameter description
EnAlRem	Off, On		On	Immediate event when an alarm is disabled for U (produces an immediate event at reset of any alarm monitoring element, when On)
EnAlarms	Off, On		On	Set to 'On' to activate alarm supervision for U (produces an immediate event at operation of any alarm monitoring element, when On)
HiAlarm	0.0-1999.9	kV	220.0	High Alarm level for U in kV
HiWarn	0.0-1999.9	kV	210.0	High Warning level for U in kV
LowWarn	0.0-1999.9	kV	170.0	Low Warning level for U in kV
LowAlarm	0.0-1999.9	kV	160.0	Low Alarm level for U in kV
RepInt	0-3600	s	0	Time between reports for U in seconds. Zero = Off (duration of time interval between two reports at periodic reporting function. Setting to 0 disables the periodic reporting)
EnDeadB	Off, On		Off	Enable amplitude dead band supervision for U
DeadBand	0.0-1999.9	kV	5.0	Amplitude dead band for U in kV
EnIDeadB	Off, On		Off	Enable integrating dead band supervision for U
IDeadB	0.0-1999.9	kV	10.0	Integrating dead band for U in kV
EnDeadBP	Off, On		Off	Enable periodic dead band reporting U
				Mean current measuring channel I:
Operation	Off, On		Off	Direct Analogue Input I Off/On
Hysteres	0-99999	A	50	Alarm hysteresis for I in A
EnAlRem	Off, On		On	Immediate event when an alarm is disabled for I (produces an immediate event at reset of any alarm monitoring element, when On)
EnAlarms	Off, On		Off	Set to 'On' to activate alarm supervision for I (produces an immediate event at operation of any alarm monitoring element, when On)
HiAlarm	0-99999	A	900	High Alarm level for I in A
HiWarn	0-99999	A	800	High Warning level for I in A
LowWarn	0-99999	A	200	Low Warning level for I in A
LowAlarm	0-99999	A	100	Low Alarm level for I in A
RepInt	0-3600	s	0	Time between reports for I in seconds. Zero = Off (duration of time interval between two reports at periodic reporting function. Setting to 0 disables the periodic reporting)
EnDeadB	Off, On		Off	Enable amplitude dead band supervision for I
DeadBand	0-99999	A	50	Amplitude dead band for I in A
EnIDeadB	Off, On		Off	Enable integrating dead band supervision for I
IDeadB	0-99999	A	10000	Integrating dead band for I in A
EnDeadBP	Off, On		Off	Enable periodic dead band reporting I
				Active power measuring channel P:
Operation	Off, On		Off	Direct Analogue Input P Off/On

Table 3:

Parameter	Range	Unit	Default	Parameter description
Hysteres	0.0-9999.9	MW	5.0	Alarm hysteresis for P in MW
EnAlRem	Off, On		On	Immediate event when an alarm is disabled for P (produces an immediate event at reset of any alarm monitoring element, when On)
EnAlarms	Off, On		Off	Set to 'On' to activate alarm supervision for P (produces an immediate event at operation of any alarm monitoring element, when On)
HiAlarm	0.0-9999.9	MW	300.0	High Alarm level for P in MW
HiWarn	0.0-9999.9	MW	200.0	High Warning level for P in MW
LowWarn	0.0-9999.9	MW	80.0	Low Warning level for P in MW
LowAlarm	0.0-9999.9	MW	50.0	Low Alarm level for P in MW
RepInt	0-3600	s	0	Time between reports for P in seconds. Zero = Off (duration of time interval between two reports at periodic reporting function. Setting to 0 disables the periodic reporting)
EnDeadB	Off, On		Off	Enable amplitude dead band supervision for P
DeadBand	0.0-9999.9	MW	1.0	Amplitude dead band for P in MW
EnIDeadB	Off, On		Off	Enable integrating dead band supervision for P
IDeadB	0.0-9999.9	MW	10.0	Integrating dead band for P in MW
EnDeadBP	Off, On		Off	Enable periodic dead band reporting P
				Reactive power measuring channel Q:
Operation	Off, On		Off	Direct Analogue Input Q Off/On
Hysteres	0.0-9999.9	Mvar	5.0	Alarm hysteresis for Q in Mvar
EnAlRem	Off, On		On	Immediate event when an alarm is disabled for Q (produces an immediate event at reset of any alarm monitoring element, when On)
EnAlarms	Off, On		Off	Set to 'On' to activate alarm supervision for Q (produces an immediate event at operation of any alarm monitoring element, when On)
HiAlarm	0.0-9999.9	Mvar	300.0	High Alarm level for Q in Mvar
HiWarn	0.0-9999.9	Mvar	200.0	High Warning level for Q in Mvar
LowWarn	0.0-9999.9	Mvar	80.0	Low Warning level for Q in Mvar
LowAlarm	0.0-9999.9	Mvar	50.0	Low Alarm level for Q in Mvar
RepInt	0-3600	s	0	Time between reports for Q in seconds. Zero = Off (duration of time interval between two reports at periodic reporting function. Setting to 0 disables the periodic reporting)
EnDeadB	Off, On		Off	Enable amplitude dead band supervision for Q
DeadBand	0.0-9999.9	Mvar	1.0	Amplitude dead band for Q in Mvar
EnIDeadB	Off, On		Off	Enable integrating dead band supervision for Q
IDeadB	0.0-9999.9	Mvar	10.0	Integrating dead band for Q in Mvar
EnDeadBP	Off, On		Off	Enable periodic dead band reporting Q
				Frequency measuring channel f:

Table 3:

Parameter	Range	Unit	Default	Parameter description
Operation	Off, On		Off	Direct Analogue Input f Off/On
Hysteres	0.0-99.9	Hz	1.0	Alarm hysteresis for f in Hz
EnAlRem	Off, On		On	Immediate event when an alarm is disabled for f (produces an immediate event at reset of any alarm monitoring element, when On)
EnAlarms	Off, On		Off	Set to 'On' to activate alarm supervision for f (produces an immediate event at operation of any alarm monitoring element, when On)
HiAlarm	0.0-99.9	Hz	55.0	High Alarm level for f in Hz
HiWarn	0.0-99.9	Hz	53.0	High Warning level for f in Hz
LowWarn	0.0-99.9	Hz	47.0	Low Warning level for f in Hz
LowAlarm	0.0-99.9	Hz	45.0	Low Alarm level for f in Hz
RepInt	0-3600	s	0	Time between reports for f in seconds. Zero = Off (duration of time interval between two reports at periodic reporting function. Setting to 0 disables the periodic reporting)
EnDeadB	Off, On		Off	Enable amplitude dead band supervision for f
DeadBand	0.0-99.9	Hz	1.0	Amplitude dead band for f in Hz
EnIDeadB	Off, On		Off	Enable integrating dead band supervision for f
IDeadB	0.0-99.9	Hz	5	Integrating dead band for f in Hz
EnDeadBP	Off, On		Off	Enable periodic dead band reporting f
				Reporting of events to the station control system (SCS) through LON port
EventMask U1	No Events, Report Events			Enables (Report Events) or disables (No Events) the reporting of events from channel DA01 to the SCS
EventMask U2	No Events, Report Events			Enables (Report Events) or disables (No Events) the reporting of events from channel DA02 to the SCS
EventMask U3	No Events, Report Events			Enables (Report Events) or disables (No Events) the reporting of events from channel DA03 to the SCS
EventMask U4	No Events, Report Events			Enables (Report Events) or disables (No Events) the reporting of events from channel DA04 to the SCS
EventMask U5	No Events, Report Events			Enables (Report Events) or disables (No Events) the reporting of events from channel DA05 to the SCS
EventMask I1	No Events, Report Events			Enables (Report Events) or disables (No Events) the reporting of events from channel DA06 to the SCS
EventMask I2	No Events, Report Events			Enables (Report Events) or disables (No Events) the reporting of events from channel DA07 to the SCS
EventMask I3	No Events, Report Events			Enables (Report Events) or disables (No Events) the reporting of events from channel DA08 to the SCS
EventMask I4	No Events, Report Events			Enables (Report Events) or disables (No Events) the reporting of events from channel DA09 to the SCS
EventMask I5	No Events, Report Events			Enables (Report Events) or disables (No Events) the reporting of events from channel DA10 to the SCS

Table 3:

Parameter	Range	Unit	Default	Parameter description
EventMask U	No Events, Report Events			Enables (Report Events) or disables (No Events) the reporting of events from channel DA11 to the SCS
EventMask I	No Events, Report Events			Enables (Report Events) or disables (No Events) the reporting of events from channel DA12 to the SCS
EventMask P	No Events, Report Events			Enables (Report Events) or disables (No Events) the reporting of events from channel DA13 to the SCS
EventMask Q	No Events, Report Events			Enables (Report Events) or disables (No Events) the reporting of events from channel DA14 to the SCS
EventMask f	No Events, Report Events			Enables (Report Events) or disables (No Events) the reporting of events from channel DA15 to the SCS

1 Application

Fast, reliable supervision of different analogue quantities is of vital importance during the normal operation of a power system. Operators in the control centres can, for example:

- Continuously follow active and reactive power flow in the network
- Supervise the busbar voltages
- Check the temperature of power transformers, shunt reactors
- Monitor the gas pressure in circuit breakers

Different measuring methods are available for different quantities. Current and voltage instrument transformers provide the basic information on measured phase currents and voltages in different points within the power system. At the same time, currents and voltages serve as the input measuring quantities to power and energy meters.

Different measuring transducers provide information on electrical and non-electrical measuring quantities such as voltage, current, temperature, and pressure. In most cases, the measuring transducers change the values of the measured quantities into the direct current. The current value usually changes within the specified mA range—in proportion to the value of the measured quantity.

Further processing of the direct currents obtained on the outputs of different measuring converters occurs within different control, protection, and monitoring terminals and within the higher hierarchical systems in the secondary power system.

The REx 5xx control, protection and monitoring terminal have a built-in option to measure and further process information from 6 up to 36 different direct current information from different measuring transducers. Six independent measuring channels are located on each independent mA input module and the REx 5xx terminals can accept from one up to six independent mA input modules, depending on the case size. Refer to the technical data and ordering particulars for the particular terminal.

Information about the measured quantities are then available to the user on different locations:

- Locally by means of the local human-machine-interface (HMI)
- Locally by means of a front-connected personal computer (PC)
- Remotely over the LON bus to the station control system (SCS)
- Remotely over the SPA port to the station monitoring system (SMS)

1.1 User-defined measuring ranges

The measuring range of different direct current measuring channels is settable by the user independent on each other within the range between -25 mA and +25 mA in steps of 0.01 mA. It is only necessary to select the upper operating limit **I_max** higher than the lower one **I_min**.

The measuring channel can have a value of 2% of the whole range I_max - I_min above the upper limit I_max or below the lower limit I_min, before an out-of-range error occurs. This means that with a nominal range of 0-10 mA, no out-of-range event will occur with a value between -0.2 mA and 10.2 mA.

User can this way select for each measuring quantity on each monitored object of a power system the most suitable measuring range and this way optimise a complete functionality together with the characteristics of the used measuring transducer.

1.2 Continuous monitoring of the measured quantity

The user can continuously monitor the measured quantity in each channel by means of six built-in operating limits (figure 1). Two of them are defined by the operating range selection: **I_Max** as the upper and **I_Min** as the lower operating limit. The other four operating limits operate in two different modes:

- Overfunction, when the measured current exceeds the **HiWarn** or **HiAlarm** pre-set values
- Underfunction, when the measured current decreases under the **Low-Warn** or **LowAlarm** pre-set values

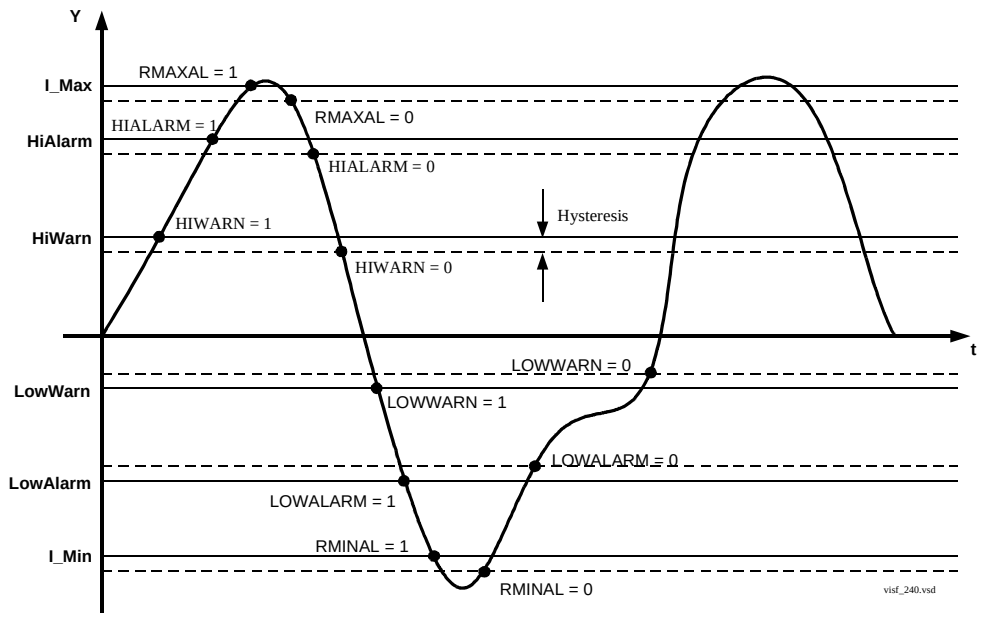

Figure 1: Presentation of the operating limits

Each operating level has its corresponding functional output signal:

- RMAXAL
- HIWARN
- HIALARM
- LOWWARN

- LOWALARM
- RMINAL

The logical value of the functional output signals changes according to figure 1 on page 608.

The user can set the hysteresis, which determines the difference between the operating and reset value at each operating point, in wide range for each measuring channel separately. The hysteresis is common for all operating values within one channel.

1.3 Continuous supervision of the measured quantity

The actual value of the measured quantity is available locally and remotely. The measurement is continuous for each channel separately, but the reporting of the value to the higher levels (control processor in the unit, HMI and SCS) depends on the selected reporting mode. The following basic reporting modes are available:

- Periodic reporting
- Periodic reporting with dead-band supervision in parallel
- Periodic reporting with dead-band supervision in series
- Dead-band reporting

Users can select between two types of dead-band supervision:

- Amplitude dead-band supervision (ADBS)
- Integrating dead-band supervision (IDBS)

1.3.1 Amplitude dead-band supervision

If the changed value —compared to the last reported value— is larger than the ± ΔY predefined limits that are set by users, and if this is detected by a new measuring sample, then the measuring channel reports the new value to a higher level. This limits the information flow to a minimum necessary. Figure 2 on page 610 shows an example of periodic reporting with the amplitude dead-band supervision.

The picture is simplified: the process is not continuous but the values are evaluated at a time intervals depending on the sampling frequency chosen by the user (SampRate setting).

After the new value is reported, the new ± ΔY limits for dead-band are automatically set around it. The new value is reported only if the measured quantity changes more than defined by the new ±ΔY set limits.

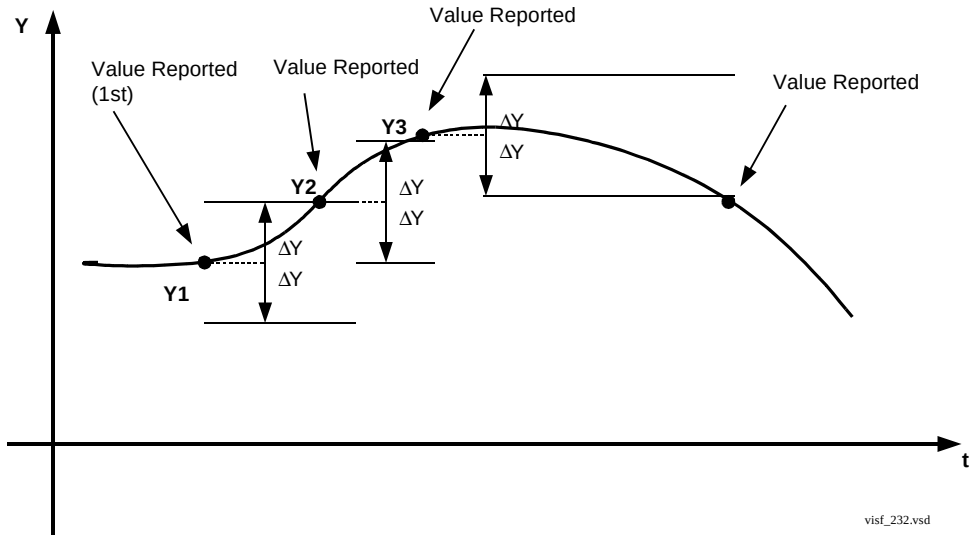

Figure 2: Amplitude dead-band supervision reporting

1.3.2 Integrating dead-band supervision

The measured value is updated if the time integral of all changes exceeds the pre-set limit (figure 3), where an example of reporting with integrating dead-band supervision is shown. The picture is simplified: the process is not continuous but the values are evaluated with a time interval of one second from each others.

The last value reported (Y1 in figure 3) serves as a basic value for further measurement. A difference is calculated between the last reported and the newly measured value during new sample and is multiplied by the time increment (discrete integral). The absolute values of these products are added until the pre-set value is exceeded. This occurs with the value Y2 that is reported and set as a new base for the following measurements (as well as for the values Y3, Y4 and Y5).

The integrating dead-band supervision is particularly indicate for monitoring signals with low variations that can last for relatively long periods.

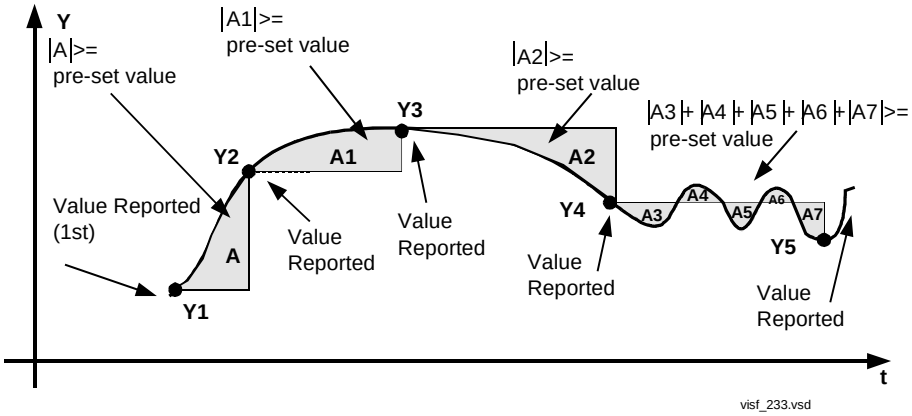

Figure 3: Reporting with integrating dead-band supervision

1.3.3 Periodic reporting

The user can select the periodic reporting of measured value in time intervals between 1 and 3600 s (setting RepInt). The measuring channel reports the value even if it has not changed for more than the set limits of amplitude or integrating dead-band supervision (figure 4). To disable the periodic reporting, set the reporting time interval to 0 s .

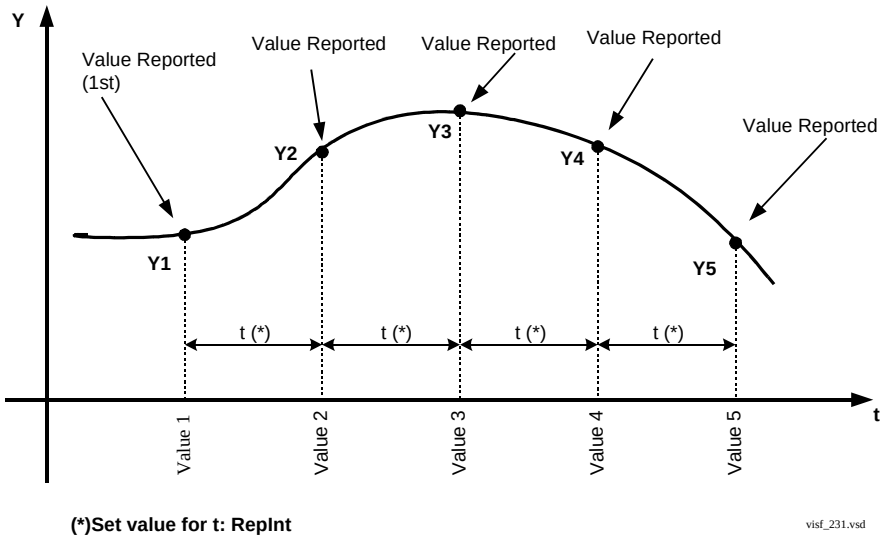

Figure 4: Periodic reporting

1.3.4 Periodic reporting with parallel dead-band supervision

The newly measured value is reported:

- After each time interval for the periodic reporting expired, **OR**
- When the new value is detected by the dead-band supervision function

Both amplitude and integrating dead-bands can be selected. The periodic reporting can be set in time intervals between 1 and 3600 seconds.

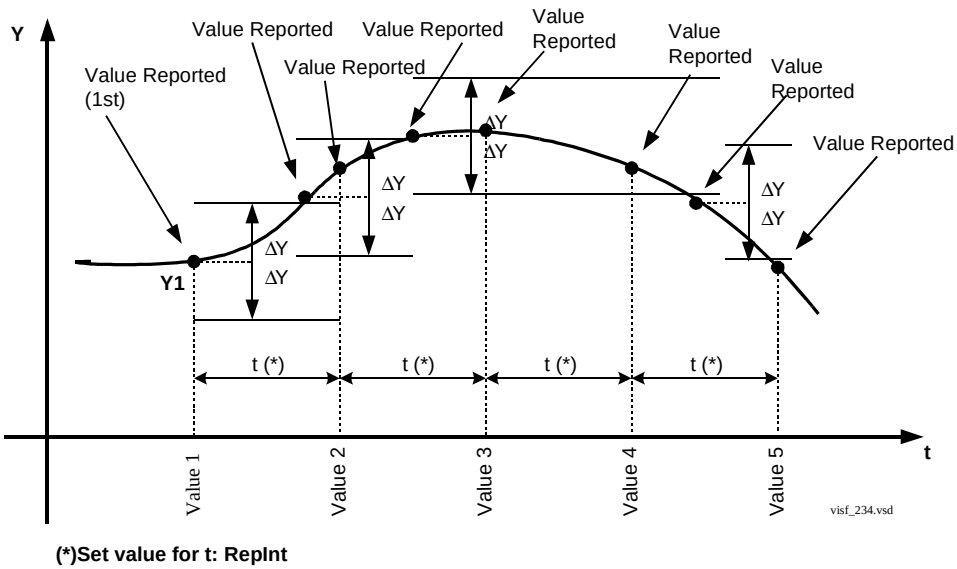

Figure 5: Periodic reporting with amplitude dead-band supervision in parallel

1.3.5 Periodic reporting with serial dead-band supervision

Periodic reporting can operate serially with the dead-band supervision. This means that the new value is reported only if the set time period expired **AND** if the dead-band limit was exceeded during the observed time (figures 6 and 7). The amplitude dead-band and the integrating dead-band can be selected. The periodic reporting can be set in time intervals between 1 and 3600 seconds.

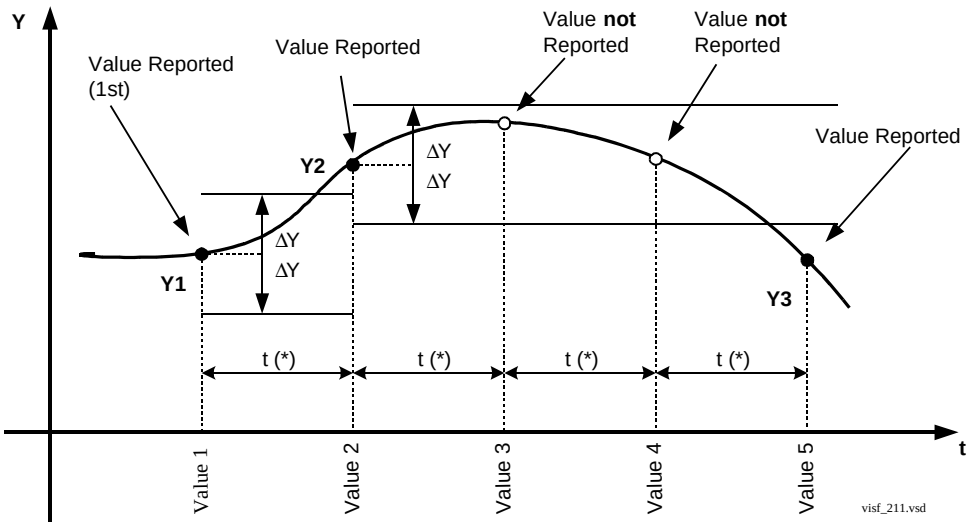

(*)Set value for t: RepInt

Figure 6: Periodic reporting with amplitude dead-band supervision in series

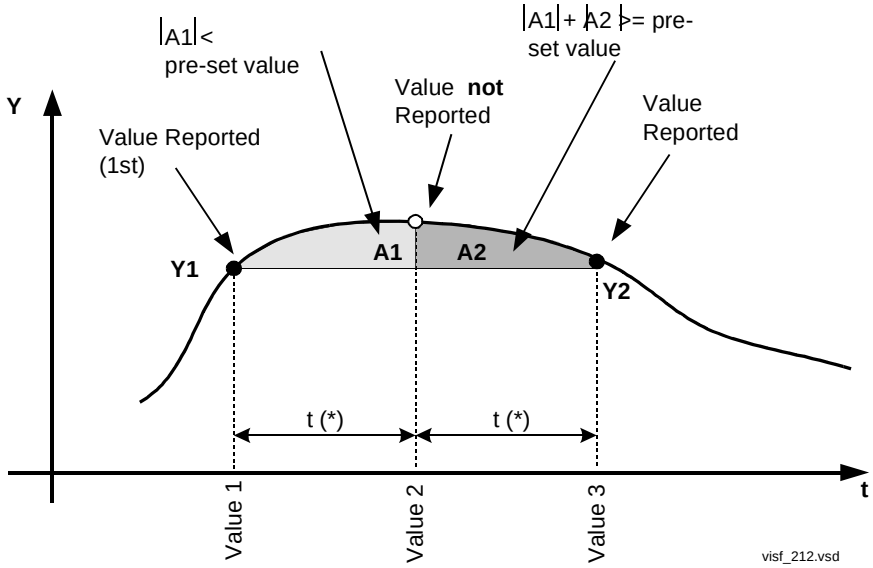

(*)Set value for t: RepInt

Figure 7: Periodic reporting with integrating dead-band supervision in series

1.3.6 Combination of periodic reportings

The reporting of the new value depends on setting parameters for the dead-band and for the periodic reporting. Table 1 presents the dependence between different settings and the type of reporting for the new value of a measured quantity.

Table 1: Dependence of reporting on different setting parameters:

EnDeadB*	EnIDeadB*	EnDeadBP*	RepInt*	**Reporting of the new value**
Off	Off	Off	0	No measured values is reported
Off	On	On	t>0	The new measured value is reported only if the time t period expired and if, during this time, the integrating dead-band limits were exceeded (periodic reporting with integrating dead-band supervision in series)
On	Off	On	t>0	The new measured value is reported only if the time t period has expired and if, during this time, the amplitude dead-band limits were exceeded (periodic reporting with amplitude dead-band supervision in series)
On	On	On	t>0	The new measured value is reported only if the time t period expired and if at least one of the dead-band limits were exceeded (periodic reporting with dead-band supervision in series)
Off	On	Off	0	The new measured value is reported only when the integrated dead-band limits are exceeded
On	Off	Off	0	The new measured value is reported only when the amplitude dead-band limits were exceeded
On	On	Off	0	The new measured value is reported only if one of the dead-band limits was exceeded
x	x	Off	t>0	The new measured value is updated at least after the time t period expired. If the dead-band supervision is additionally selected, the updating also occurs when the corresponding dead-band limit was exceeded (periodic reporting with parallel dead-band supervision)

* please, refer to the setting table for the explanation

2 Theory of operation and Design

The design of the mA input modules follows the design of all REx 5xx-series protection, control, and monitoring terminals that have distributed functionality, where the decision levels are placed as closely as possible to the process.

Each independent measuring module contains all necessary circuitry and functionality for measurement of six independent measuring quantities related to the corresponding measured direct currents.

On the accurate input shunt resistor (R), the direct input current (from the measuring converter) is converted into a proportional voltage signal (the voltage drop across the shunt resistor is in proportion to the measured current). Later, the voltage signal is processed within one differential type of measuring channel (figure 8).

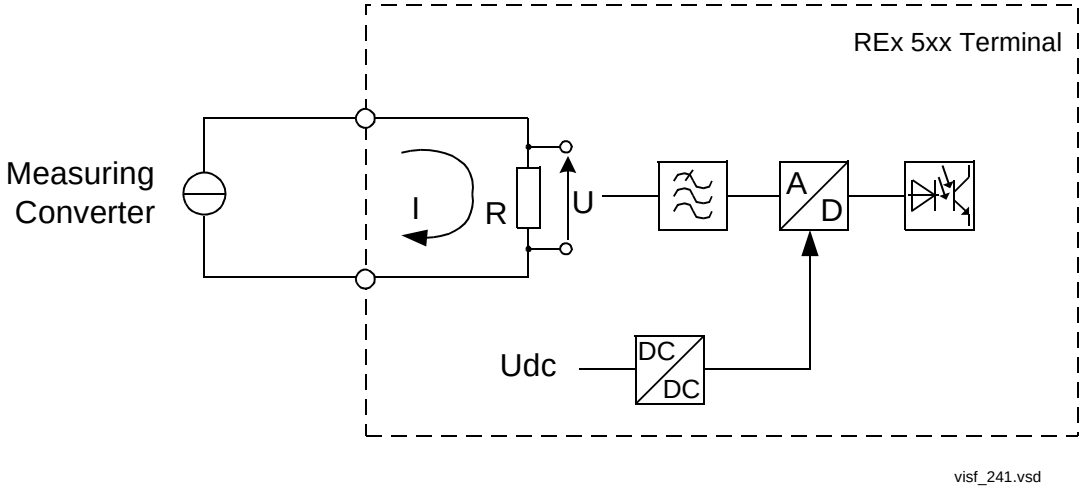

Figure 8: Simplified diagram for the function

The measured voltage is filtered by the low-pass analogue filter before entering the analogue to digital converter (A/D). Users can set the sampling frequency of the A/D converter between 5 Hz and 255 Hz to adapt to different application requirements as best as possible.

The digital information is filtered by the digital low-pass filter with the $(\sin x/x)^3$ response. The filter notch frequency automatically follows the selected sampling frequency. The relation between the frequency corresponding to the suppression of -3 dB and the filter notch frequency corresponds to the equation:

$$f_{-3dB} = 0,262 \cdot f_{notch}$$

Using optocouplers and DC/DC conversion elements that are used separately for each measuring channel, the input circuitry of each measuring channel is galvanically separated from:

- The internal measuring circuits
- The control microprocessor on the board

A microprocessor collects the digitized information from each measuring channel. The microprocessor serves as a communication interface to the main processing module (MPM).

All processing of the measured signal is performed on the module so that only the minimum amount of information is necessary to be transmitted to and from the MPM. The measuring module receives information from the MPM on setting and the command parameters; it reports the measured values and additional information—according to needs and values of different parameters.

Each measuring channel is calibrated very accurately during the production process. The continuous internal zero offset and full-scale calibration during the normal operation is performed by the A/D converter. The calibration covers almost all analogue parts of the A/D conversion, but neglects the shunt resistance.

Each measuring channel has built in a zero-value supervision, which greatly rejects the noise generated by the measuring transducers and other external equipment. The value of the measured input current is reported equal to zero (0) if the measured primary quantity does not exceed ±0.5% of the maximum measuring range.

The complete measuring module is equipped with advanced self-supervision. Only the outermost analogue circuits cannot be monitored. The A/D converter, optocouplers, digital circuitry, and DC/DC converters, are all supervised on the module. Over the CAN bus, the measuring module sends a message to the MPM for any detected errors on the supervised circuitry.

3 Setting instructions

SMS and the CAP 531 configuration tool have to be used in order to set all the parameters that are related to different DC analogue quantities.

Users can set the 13 character name for each measuring channel.

All the monitoring operating values and the hysteresis can be set directly in the mA of the measured input currents from the measuring transducers.

The measured quantities can be displayed locally and/or remotely according to the corresponding modules that are separately set for each measuring channel by the users (five characters).

The relation between the measured quantity in the power system and the setting range of the direct current measuring channel corresponds to this equation:

$$Value = ValueMin + (I - IMin) \cdot \frac{ValueMax - ValueMin}{IMax - IMin} \qquad \text{(Equation 1)}$$

Where:

$IMin$ is the set value for the minimum operating current of a channel in mA

IMax is the set value for the maximum operating current of a channel in mA

ValueMin is the value of the primary measuring quantity corresponding to the set value of minimum operating current of a channel, *IMin*

ValueMax is the value of the primary measuring quantity corresponding to the set value of maximum operating current of a channel, *IMax*

Value is the actual value of the primary measured quantity

Figure 9 shows the relationship between the direct mA current I and the actual value of the primary measured quantity, *Value* .

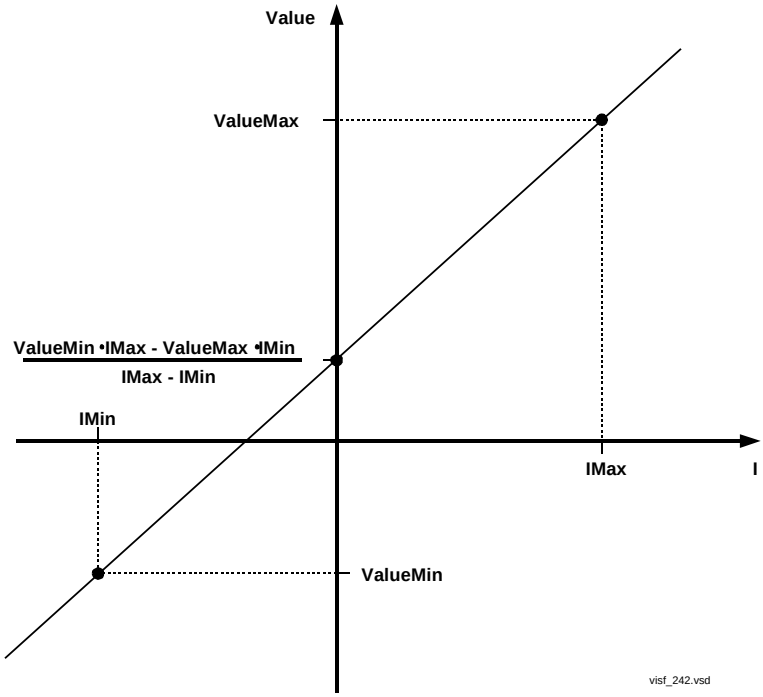

Figure 9: Relationship between the direct current (I) and the measured quantity primary value (Value)

The dead-band limits can be set directly in the mA of the input direct current for:

- Amplitude dead-band supervision ADBS
- Integrating dead-band supervision IDBS

The *IDBS* area [mAs] is defined by the following equation:

$$IDBS = \frac{IDeadB}{SampRate} = IDeadB \cdot ts \qquad \text{(Equation 2)}$$

where:

IDeadB is the set value of the current level for IDBS in mA

$SampRate$ is the sampling rate (frequency) set value, in Hz

$ts = \frac{1}{SampRate}$ is the time between two samples in s.

If a 0.1 mA variation in the monitored quantity for 10 minutes (600 s) is the event that should cause the trigger of the IDBS monitoring (reporting of the value because of IDBS threshold operation) and the sampling frequency (SampRate) of the monitored quantity is 5 Hz, than the set value for IDBS (IDeadB) will be 300 mA:

$$IDBS = 0.1 \cdot 600 = 60[mA\ s] \quad \text{(Equation 3)}$$

$$IDeadB = IDBS \cdot SampRate = 60 \cdot 5 = 300[mA] \quad \text{(Equation 4)}$$

The polarity of connected direct current input signal can be changed by setting the ChSign to On or Off. This way it is possible to compensate by setting the eventually wrong connection of the direct current leeds between the measuring converter and the input terminals of the REx 5xx series unit.

The setting table lists all setting parameters with additional explanation.

Note: It is important to set the time for periodic reporting and deadband in an optimised way to minimise the load on the station bus.

4 Testing

A stabilized direct current generator and mA meter with very high accuracy for measurement of direct current is needed in order to test the dc measuring module. The generator operating range and the measuring range of the mA meter must be at least between -25 and 25 mA.

Connect the current generator and mA meter to the corresponding direct current input terminals. Check that the values presented on the HMI module corresponds to the magnitude of input direct current within the limits of declared accuracy. The service value is available under the submenu:

Service Report
I/O
Slotnm-MIMx
MIxy-Value

where:

nm represents the serial number of a slot with tested mA input module

x represents the serial number of a mA input module in a terminal

y represents the serial number of a measuring channel on module x.

The operation of ADBS or IDBS function can be checked separately with the setting of RepInt = 0. The value on the HMI must change only when the changes in input current (compared to the present value) are higher than the set value for the selected dead band.

Configure the monitoring output signals (see the signal list) to the corresponding output relays. Check the operating monitoring levels by changing the magnitude of input current and observing the operation of the corresponding output relays.

The output contact changes its state when the changes in the input measuring quantity are higher than the set values RMAXAL, HIWARN, HIALARM, or lower than the set values LOWWARN, LOWALARM, RMINAL.

5 Appendix

5.1 Function blocks

Monitoring of DC analogue measurements
Channel Input 1 of Module x (x=1...MAXMOD)

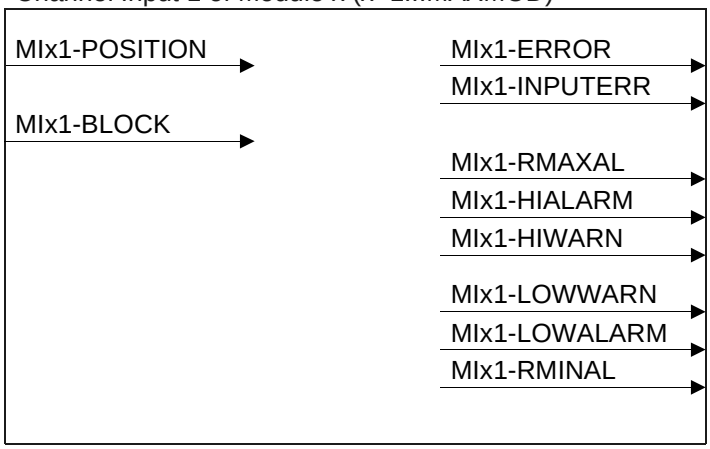

Monitoring of DC analogue measurements
Channel Inputs 2 to 6 (y) of Module x (x=1...MAXMOD)

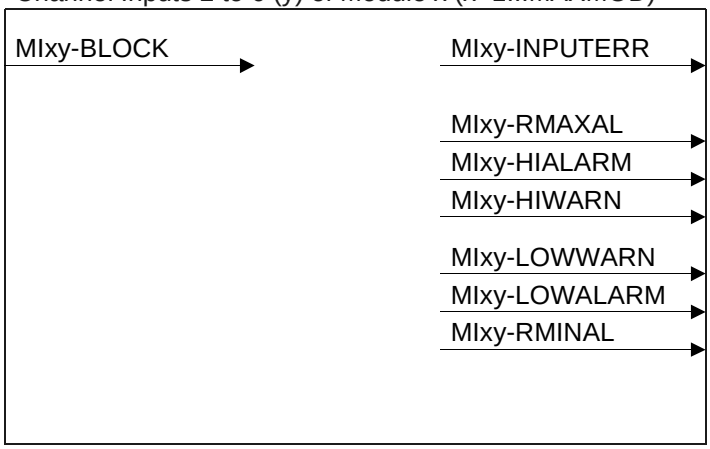

visf_243.vsd

MAXMOD: REx 5xx terminals can accept from one up to six independent mA input modules, depending on the case size. Refer to the technical data and ordering particulars for the particular terminal.

5.2 Signal list

Table 2:

Block	Signal	Type	Description
			Module signals and input 1
MIx1-	POSITION	IN	Position of module number x
MIx1-	BLOCK	IN	Block updating of values input 1
MIx1-	ERROR	OUT	Board Error on module number x. It signalises also the wrong module on the specified position.
MIx1-	INPUTERR	OUT	Error on input 1
MIx1-	RMAXAL	OUT	Rangemax Alarm input 1
MIx1-	HIALARM	OUT	High Alarm input 1
MIx1-	HIWARN	OUT	High Warning input 1
MIx1-	LOWWARN	OUT	Low Warning input 1
MIx1-	LOWALARM	OUT	Low Alarm input 1
MIx1-	RMINAL	OUT	Rangemin Alarm input 1
			Input 2
MIx2	BLOCK	IN	Block updating of values input 2
MIx2-	INPUTERR	OUT	Error on input 2
MIx2-	RMAXAL	OUT	Rangemax Alarm input 2
MIx2-	HIALARM	OUT	High Alarm input 2
MIx2-	HIWARN	OUT	High Warning input 2
MIx2-	LOWWARN	OUT	Low Warning input 2
MIx2-	LOWALARM	OUT	Low Alarm input 2
MIx2-	RMINAL	OUT	Rangemin Alarm input 2
			Input 3
MIx3	BLOCK	IN	Block updating of values input 3
MIx3-	INPUTERR	OUT	Error on input 3
MIx3-	RMAXAL	OUT	Rangemax Alarm input 3
MIx3-	HIALARM	OUT	High Alarm input 3
MIx3-	HIWARN	OUT	High Warning input 3
MIx3-	LOWWARN	OUT	Low Warning input 3
MIx3-	LOWALARM	OUT	Low Alarm input 3
MIx3-	RMINAL	OUT	Rangemin Alarm input 3
			Input 4
MIx4	BLOCK	IN	Block updating of values input 4
MIx4-	INPUTERR	OUT	Error on input 4
MIx4-	RMAXAL	OUT	Rangemax Alarm input 4
MIx4-	HIALARM	OUT	High Alarm input 4
MIx4-	HIWARN	OUT	High Warning input 4
MIx4-	LOWWARN	OUT	Low Warning input 4
MIx4-	LOWALARM	OUT	Low Alarm input 4

Table 2:

Block	Signal	Type	Description
MIx4-	RMINAL	OUT	Rangemin Alarm input 4
			Input 5
MIx5	BLOCK	IN	Block updating of values input 5
MIx5-	INPUTERR	OUT	Error on input 5
MIx5-	RMAXAL	OUT	Rangemax Alarm input 5
MIx5-	HIALARM	OUT	High Alarm input 5
MIx5-	HIWARN	OUT	High Warning input 5
MIx5-	LOWWARN	OUT	Low Warning input 5
MIx5-	LOWALARM	OUT	Low Alarm input 5
MIx5-	RMINAL	OUT	Rangemin Alarm input 5
			Input 6
MIx6	BLOCK	IN	Block updating of values input 6
MIx6-	INPUTERR	OUT	Error on input 6
MIx6-	RMAXAL	OUT	Rangemax Alarm input 6
MIx6-	HIALARM	OUT	High Alarm input 6
MIx6-	HIWARN	OUT	High Warning input 6
MIx6-	LOWWARN	OUT	Low Warning input 6
MIx6-	LOWALARM	OUT	Low Alarm input 6
MIx6-	RMINAL	OUT	Rangemin Alarm input 6

The x within the block name corresponds to the module number.

5.3 Setting table

Table 3: Setting table for a generic input module

Parameter	Range	Unit	Default	Parameter description
				Module Parameter
SampRate	5-255	Hz	5	Sampling Rate for mA Input Module x
				Input 1
Name	Usr def. string	String	MI61-Value	Use defined name for input 1. String length up to 13 characters, all characters available on the HMI can be used
Operation	Off, On		Off	Input 1 On/Off
Calib	Off, On		On	Set to ’On’ to use production calibration for Input 1
ChSign	Off, On		Off	Set to ’On’ if sign of Input 1 shall be changed
Unit	0-5		Unit1	State a 5 character unit name for Input 1
Hysteres	0.0-20.0	mA	1.0	Alarm hysteresis for Input 1 in mA
EnAlRem	Off, On		Off	Immediate event when an alarm is removed for Input 1
I_Max	-25.00-25.00	mA	20.00	Max current of transducer to Input 1 in mA
I_Min	-25.00-25.00	mA	4.00	Min current of transducer to Input 1 in mA

Table 3: Setting table for a generic input module

Parameter	Range	Unit	Default	Parameter description
EnAlarm	Off, On		Off	Set to 'On' to activate alarm supervision for Input 1
HiAlarm	-25.00-25.00	mA	19.00	High Alarm level for Input 1 in mA
HiWarn	-25.00-25.00	mA	18.00	High Warning level for Input 1 in mA
LowWarn	-25.00-25.00	mA	6.00	Low warning level for Input 1 in mA
LowAlarm	-25.00-25.00	mA	5.00	Low Alarm level for Input 1 in mA
RepInt	0-3600	s	0	Time between reports for Input 1 in seconds
EnDeadB	Off, On		Off	Enable amplitude dead band supervision for Input 1
DeadBand	0.00-20.00	mA	1.00	Amplitude dead band for Input 1 in mA
EnIDeadB	Off, On		Off	Enable integrating dead band supervision for Input 1
IDeadB	0.00-1000.00	mA	2.00	Integrating dead band for Input 1 in mA
EnDeadBP	Off, On		Off	Enable periodic dead band reporting Input 1
MaxValue	-1000.00-1000.00	(*)	20.00	Max primary value corr. to I_Max, Input 1. It determines the maximum value of the measuring transducer primary measuring quantity, which corresponds to the maximum permitted input current I_Max
MinValue	-1000.00-1000.00	(*)	4.00	Min primary value corr. to I_Min, Input 1. It determines the minimum value of the measuring transducer primary measuring quantity, which corresponds to the minimum permitted input current I_Min
				Input 2
Name	Usr def. string	String	MI62-Value	Use defined name for input 2. String length up to 13 characters, all characters available on the HMI can be used
Operation	Off, On		Off	Input 2 On/Off
Calib	Off, On		On	Set to 'On' to use production calibration for Input 2
ChSign	Off, On		Off	Set to 'On' if sign of Input 2 shall be changed
Unit	0-5		Unit2	State a 5 character unit name for Input 2
Hysteres	0.0-20.0	mA	1.0	Alarm hysteresis for Input 2 in mA
EnAlRem	Off, On		Off	Immediate event when an alarm is removed for Input 2
I_Max	-25.00-25.00	mA	20.00	Max current of transducer to Input 2 in mA
I_Min	-25.00-25.00	mA	4.00	Min current of transducer to Input 2 in mA
EnAlarm	Off, On		Off	Set to 'On' to activate alarm supervision for Input 2
HiAlarm	-25.00-25.00	mA	19.00	High Alarm level for Input 2 in mA
HiWarn	-25.00-25.00	mA	18.00	High Warning level for Input 2 in mA
LowWarn	-25.00-25.00	mA	6.00	Low warning level for Input 2 in mA
LowAlarm	-25.00-25.00	mA	5.00	Low Alarm level for Input 2 in mA
RepInt	0-3600	s	0	Time between reports for Input 2 in seconds
EnDeadB	Off, On		Off	Enable amplitude dead band supervision for Input 2
DeadBand	0.00-20.00	mA	1.00	Amplitude dead band for Input 2 in mA
EnIDeadB	Off, On		Off	Enable integrating dead band supervision for Input 2
IDeadB	0.00-1000.00	mA	2.00	Integrating dead band for Input 2 in mA
EnDeadBP	Off, On		Off	Enable periodic dead band reporting Input 2

Table 3: Setting table for a generic input module

Parameter	Range	Unit	Default	Parameter description
MaxValue	-1000.00-1000.00	(*)	20.00	Max primary value corr. to I_Max, Input 2. It determines the maximum value of the measuring transducer primary measuring quantity, which corresponds to the maximum permitted input current I_Max
MinValue	-1000.00-1000.00	(*)	4.00	Min primary value corr. to I_Min, Input 2. It determines the minimum value of the measuring transducer primary measuring quantity, which corresponds to the minimum permitted input current I_Min
				Input 3
Name	Usr def. string	String	MI63-Value	Use defined name for input 3. String length up to 13 characters, all characters available on the HMI can be used
Operation	Off, On		Off	Input 3 On/Off
Calib	Off, On		On	Set to 'On' to use production calibration for Input 3
ChSign	Off, On		Off	Set to 'On' if sign of Input 3 shall be changed
Unit	0-5		Unit3	State a 5 character unit name for Input 3
Hysteres	0.0-20.0	mA	1.0	Alarm hysteresis for Input 3 in mA
EnAlRem	Off, On		Off	Immediate event when an alarm is removed for Input 3
I_Max	-25.00-25.00	mA	20.00	Max current of transducer to Input 3 in mA
I_Min	-25.00-25.00	mA	4.00	Min current of transducer to Input 3 in mA
EnAlarm	Off, On		Off	Set to 'On' to activate alarm supervision for Input 3
HiAlarm	-25.00-25.00	mA	19.00	High Alarm level for Input 3 in mA
HiWarn	-25.00-25.00	mA	18.00	High Warning level for Input 3 in mA
LowWarn	-25.00-25.00	mA	6.00	Low warning level for Input 3 in mA
LowAlarm	-25.00-25.00	mA	5.00	Low Alarm level for Input 3 in mA
RepInt	0-3600	s	0	Time between reports for Input 3 in seconds
EnDeadB	Off, On		Off	Enable amplitude dead band supervision for Input 3
DeadBand	0.00-20.00	mA	1.00	Amplitude dead band for Input 3 in mA
EnIDeadB	Off, On		Off	Enable integrating dead band supervision for Input 3
IDeadB	0.00-1000.00	mA	2.00	Integrating dead band for Input 3 in mA
EnDeadBP	Off, On		Off	Enable periodic dead band reporting Input 3
MaxValue	-1000.00-1000.00	(*)	20.00	Max primary value corr. to I_Max, Input 3. It determines the maximum value of the measuring transducer primary measuring quantity, which corresponds to the maximum permitted input current I_Max
MinValue	-1000.00-1000.00	(*)	4.00	Min primary value corr. to I_Min, Input 3. It determines the minimum value of the measuring transducer primary measuring quantity, which corresponds to the minimum permitted input current I_Min
				Input 4
Name	Usr def. string	String	MI64-Value	Use defined name for input 4. String length up to 13 characters, all characters available on the HMI can be used
Operation	Off, On		Off	Input 4 On/Off
Calib	Off, On		On	Set to 'On' to use production calibration for Input 4

Table 3: Setting table for a generic input module

Parameter	Range	Unit	Default	Parameter description
ChSign	Off, On		Off	Set to ’On’ if sign of Input 4 shall be changed
Unit	0-5		Unit4	State a 5 character unit name for Input 4
Hysteres	0.0-20.0	mA	1.0	Alarm hysteresis for Input 4 in mA
EnAlRem	Off, On		Off	Immediate event when an alarm is removed for Input 4
I_Max	-25.00-25.00	mA	20.00	Max current of transducer to Input 4 in mA
I_Min	-25.00-25.00	mA	4.00	Min current of transducer to Input 4 in mA
EnAlarm	Off, On		Off	Set to ’On’ to activate alarm supervision for Input 4
HiAlarm	-25.00-25.00	mA	19.00	High Alarm level for Input 4 in mA
HiWarn	-25.00-25.00	mA	18.00	High Warning level for Input 4 in mA
LowWarn	-25.00-25.00	mA	6.00	Low warning level for Input 4 in mA
LowAlarm	-25.00-25.00	mA	5.00	Low Alarm level for Input 4 in mA
RepInt	0-3600	s	0	Time between reports for Input 4 in seconds
EnDeadB	Off, On		Off	Enable amplitude dead band supervision for Input 4
DeadBand	0.00-20.00	mA	1.00	Amplitude dead band for Input 4 in mA
EnIDeadB	Off, On		Off	Enable integrating dead band supervision for Input 4
IDeadB	0.00-1000.00	mA	2.00	Integrating dead band for Input 4 in mA
EnDeadBP	Off, On		Off	Enable periodic dead band reporting Input 4
MaxValue	-1000.00-1000.00	(*)	20.00	Max primary value corr. to I_Max, Input 4. It determines the maximum value of the measuring transducer primary measuring quantity, which corresponds to the maximum permitted input current I_Max
MinValue	-1000.00-1000.00	(*)	4.00	Min primary value corr. to I_Min, Input 4. It determines the minimum value of the measuring transducer primary measuring quantity, which corresponds to the minimum permitted input current I_Min
				Input 5
Name	Usr def. string	String	MI65-Value	Use defined name for input 5. String length up to 13 characters, all characters available on the HMI can be used
Operation	Off, On		Off	Input 5 On/Off
Calib	Off, On		On	Set to ’On’ to use production calibration for Input 5
ChSign	Off, On		Off	Set to ’On’ if sign of Input 5 shall be changed
Unit	0-5		Unit5	State a 5 character unit name for Input 5
Hysteres	0.0-20.0	mA	1.0	Alarm hysteresis for Input 5 in mA
EnAlRem	Off, On		Off	Immediate event when an alarm is removed for Input 5
I_Max	-25.00-25.00	mA	20.00	Max current of transducer to Input 5 in mA
I_Min	-25.00-25.00	mA	4.00	Min current of transducer to Input 5 in mA
EnAlarm	Off, On		Off	Set to ’On’ to activate alarm supervision for Input 5
HiAlarm	-25.00-25.00	mA	19.00	High Alarm level for Input 5 in mA
HiWarn	-25.00-25.00	mA	18.00	High Warning level for Input 5 in mA
LowWarn	-25.00-25.00	mA	6.00	Low warning level for Input 5 in mA
LowAlarm	-25.00-25.00	mA	5.00	Low Alarm level for Input 5 in mA
RepInt	0-3600	s	0	Time between reports for Input 5 in seconds

Table 3: Setting table for a generic input module

Parameter	Range	Unit	Default	Parameter description
EnDeadB	Off, On		Off	Enable amplitude dead band supervision for Input 5
DeadBand	0.00-20.00	mA	1.00	Amplitude dead band for Input 5 in mA
EnIDeadB	Off, On		Off	Enable integrating dead band supervision for Input 5
IDeadB	0.00-1000.00	mA	2.00	Integrating dead band for Input 5 in mA
EnDeadBP	Off, On		Off	Enable periodic dead band reporting Input 5
MaxValue	-1000.00-1000.00	(*)	20.00	Max primary value corr. to I_Max, Input 5. It determines the maximum value of the measuring transducer primary measuring quantity, which corresponds to the maximum permitted input current I_Max
MinValue	-1000.00-1000.00	(*)	4.00	Min primary value corr. to I_Min, Input 5. It determines the minimum value of the measuring transducer primary measuring quantity, which corresponds to the minimum permitted input current I_Min
				Input 6
Name	Usr def. string	String	MI66-Value	Use defined name for input 6. String length up to 13 characters, all characters available on the HMI can be used
Operation	Off, On		Off	Input 6 On/Off
Calib	Off, On		On	Set to ’On’ to use production calibration for Input 6
ChSign	Off, On		Off	Set to ’On’ if sign of Input 6 shall be changed
Unit	0-5		Unit6	State a 5 character unit name for Input 6
Hysteres	0.0-20.0	mA	1.0	Alarm hysteresis for Input 6 in mA
EnAlRem	Off, On		Off	Immediate event when an alarm is removed for Input 6
I_Max	-25.00 - 25.00	mA	20.00	Max current of transducer to Input 6 in mA
I_Min	-25.00 - 25.00	mA	4.00	Min current of transducer to Input 6 in mA
EnAlarm	Off, On		Off	Set to ’On’ to activate alarm supervision for Input 6
HiAlarm	-25.00-25.00	mA	19.00	High Alarm level for Input 6 in mA
HiWarn	-25.00-25.00	mA	18.00	High Warning level for Input 6 in mA
LowWarn	-25.00-25.00	mA	6.00	Low warning level for Input 6 in mA
LowAlarm	-25.00-25.00	mA	5.00	Low Alarm level for Input 6 in mA
RepInt	0-3600	s	0	Time between reports for Input 6 in seconds
EnDeadB	Off, On		Off	Enable amplitude dead band supervision for Input 6
DeadBand	0.00-20.00	mA	1.00	Amplitude dead band for Input 6 in mA
EnIDeadB	Off, On		Off	Enable integrating dead band supervision for Input 6
IDeadB	0.00-1000.00	mA	2.00	Integrating dead band for Input 6 in mA
EnDeadBP	Off, On		Off	Enable periodic dead band reporting Input 6
MaxValue	-1000.00-1000.00	(*)	20.00	Max primary value corr. to I_Max, Input 6. It determines the maximum value of the measuring transducer primary measuring quantity, which corresponds to the maximum permitted input current I_Max
MinValue	-1000.00-1000.00	(*)	4.00	Min primary value corr. to I_Min, Input 6. It determines the minimum value of the measuring transducer primary measuring quantity, which corresponds to the minimum permitted input current I_Min

Note: (*) is referred to the five characters user-defined setting parameter called “Unit” where the user can write the name of the unit of the measuring converter input measuring quantity.

1 Application

The pulse counter function provides the Substation Automation system with the number of pulses, which have been accumulated in the REx 5xx terminal during a defined period of time, for calculation of, for example, energy values. The pulses are captured on the Binary Input Module (BIM) that is read by the pulse counter function. The number of pulses in the counter is then reported via LON to the station HMI or read via SPA as a service value.

The normal use for this function is the counting of energy pulses for kWh and kvarh in both directions from external energy meters. Up to 12 binary inputs in a REx 5xx can be used for this purpose with a frequency of up to 40 Hz.

2 Theory of operation

The registration of pulses is done for positive transitions (0–>1) on one of the 16 binary input channels located on the Binary Input Module (BIM). Pulse counter values are read from the station HMI with predefined cyclicity without reset, and an analogue event is created.

The integration time period can be set in the range from 30 seconds to 60 minutes and is synchronised with absolute system time. That means, a cycle time of one minute will generate a pulse counter reading every full minute. Interrogation of additional pulse counter values can be done with a command (intermediate reading) for a single counter. All active counters can also be read by the LON General Interrogation command (GI).

The pulse counter in REx 5xx supports unidirectional incremental counters. That means only positive values are possible. The counter uses a 32 bit format, that is, the reported value is a 32-bit, signed integer with a range 0...+2147483647. The counter is reset at initialisation of the terminal or by turning the pulse counter operation parameter Off/On.

The reported value to station HMI over the LON bus contains Identity, Value, Time, and Pulse Counter Quality. The Pulse Counter Quality consists of:

- Invalid (board hardware error or configuration error)
- Wrapped around
- Blocked
- Adjusted

The transmission of the counter value by SPA can be done as a service value, that is, the value frozen in the last integration cycle is read by the station HMI from the database. The pulse counter function updates the value in the database when an integration cycle is finished and activates the NEW_VAL signal in the function block. This signal can be connected to an Event function block, be time tagged, and transmitted to the station HMI. This time corresponds to the time when the value was frozen by the function.

3 Design

The function can be regarded as a function block with a few inputs and outputs. The inputs are divided into two groups: settings and connectables (configuration). The outputs are divided into three groups: signals (binary), service value for SPA, and analogue event for LON.

Figure 1: shows the pulse counter function block with connections of the inputs and outputs.

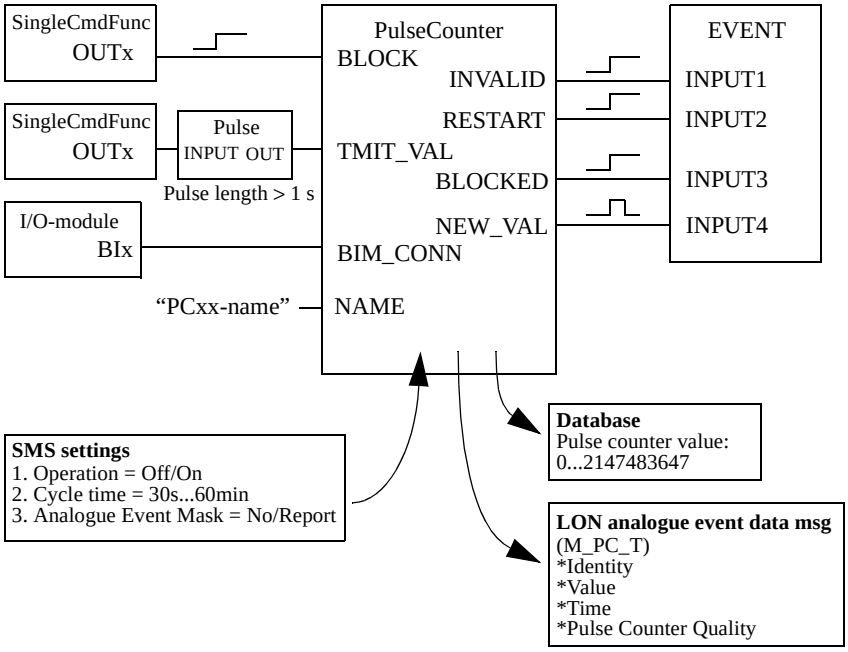

Figure 1: Overview of the pulse counter function

The BLOCK and TMIT_VAL inputs can be connected to Single Command blocks, which are intended to be controlled either from the station HMI or/and the local HMI. As long as the BLOCK signal is set, the pulse counter is blocked. The signal connected to TMIT_VAL performs one additional reading per positive flank. The signal must be a pulse with a length >1 second.

The BIM_CONN input is connected to the used input of the function block for the Binary Input Module (BIM). If BIM_CONN is connected to another function block, the INVALID signal is activated to indicate the configuration error.

The NAME input is used for a user-defined name with up to 19 characters.

Each pulse counter function block has four output signals: INVALID, RESTART, BLOCKED, and NEW_VAL. These signals can be connected to an Event function block for event recording.

The INVALID signal is a steady signal and is set if the Binary Input Module, where the pulse counter input is located, fails or has wrong configuration.

The RESTART signal is a steady signal and is set when the reported value does not comprise a complete integration cycle. That is, in the first message after terminal start-up, in the first message after deblocking, and after the counter has wrapped around during last integration cycle.

The BLOCKED signal is a steady signal and is set when the counter is blocked. There are two reasons why the counter is blocked:

- The BLOCK input is set, or
- The Binary Input Module, where the counter input is situated, is inoperative.

The NEW_VAL signal is a pulse signal. The signal is set if the counter value was updated since last report.

4 Setting

From SMS under the “Set Pulse Counter 1...12” menu, these parameters can be set individually for each pulse counter:

- Operation = Off/On
- Cycle Time = 30s / 1min / 1min30s / 2min / 2min30s / 3min / 4min / 5min / 6min / 7min30s / 10min / 12min / 15min / 20min / 30min / 60min.

Under “Mask - Analogue Events” in SMS, the reporting of the analogue events can be masked:

- Event Mask = No Events/Report Events

The configuration of the inputs and outputs of the pulse counter function block is made by the CAP 531 configuration tool.

The appendix shows the parameters and their setting ranges.

On the Binary Input Module, the debounce filter time is fixed set to 5 ms, that is, the counter suppresses pulses with a pulse length less than 5 ms. The input oscillation blocking frequency is preset to 40 Hz. That means that the counter finds the input oscillating if the input frequency is greater than 40 Hz. The oscillation suppression is released at 30 Hz. From SMS under the “Configure I/O-modules” menu and from the local HMI, the values for blocking/release of the oscillation can be changed. Note that the setting is common for all channels on a Binary Input Module, that is, if changes of the limits are made for inputs not connected to the pulse counter, the setting also influences the inputs on the same board used for pulse counting.

5 Testing

The test of the pulse counter function requires at least a SPA (or LON) connection to a station HMI including corresponding functionality. A known number of pulses are with different frequency connected to the pulse-counter input. The test should be performed for the settings operation = Off/On and for blocked/deblocked function. The pulse counter value is then read by the station HMI.

6 Appendix

6.1 Function block

PCxx

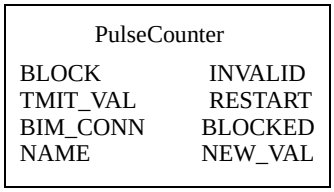

6.2 Signal list

PC01-	**BIM_CONN**	**IN**	**Binary input module connection used for pulse aquisition**
PC01-	BLOCK	IN	Block aquisition
PC01-	TMIT_VAL	IN	Asyncronous reading. Pulsing of this input makes an additional reading of the pulse input. Value is read at TMIT_VAL positive flank
PC01-	BLOCKED	OUT	Set when BLOCK input is set or when the used BIM is inoperative
PC01-	INVALID	OUT	Set when used BIM fails or has wrong configuration
PC01-	NEW_VAL	OUT	New value exists. Set if counter value has changed since last read report
PC01-	RESTART	OUT	Set if counter value does not comprise a full integration cycle for read report
PC01-	NAME		See settings table

6.3 Setting table

Parameter	Range	Unit	Default	Parameter description
NAME	User def. string	String	PC01-NAME	User defined name String length up to 19 characters. Can only be set using the CAP 531 configuration tool
Operation	Off, On		Off	Pulse counter Off/On. Can only be set from SMS
CycleTime	30s, 1min, 1min30s, 2min, 2min30s, 3min, 4min, 5min, 6min, 7min30s, 10min, 12min, 15min, 20min,30min, 60min		15min	Reporting of counter value cycle time in minutes and seconds. Can only be set from SMS
EventMaskx	No events, Report events		No events	Mask for analogue events from pulse counter x (x=01-12). Can only be set from SMS