Contents Page

Installation and commissioning 4–5
Receiving and storage..... 4–5
Installation 4–5
Mechanical installation 4–5
19" rack installation 4–5
Rack mounting - Example 1 4–6
Rack mounting - Example 2 4–6
Flush mounting 4–8
Semi-flush mounting 4–9
Wall mounting 4–10
Wall mounting 4–10
Electrical connections 4–11
Voltage connectors 4–13
Fibre optic connections 4–14
Setting and configuration..... 4–15
Local human-machine interface (HMI) 4–15
Front communication..... 4–15
Serial communication..... 4–16
Configuration of inputs and outputs 4–17
Commissioning..... 4–18
Test of internal circuits 4–19
Secondary injection test 4–19
Check of external connections 4–19
COMBITEST test-switch RTXP 24 4–19
Functional test..... 4–20
Test termination 4–20
Fault tracing..... 4–21
Using information on the local HMI 4–21
Using front-connected PC or SMS 4–22
Repair instruction 4–23
Maintenance..... 4–24
Local human-machine interface 4–25
Introduction..... 4–25
Human-machine interface module - design..... 4–25
LEDs 4–26
LCD display..... 4–26
Buttons 4–26
HMI modes 4–28
Idle mode 4–28
Reporting mode..... 4–28
Configuration mode..... 4–28
Test mode 4–28
Menu window 4–29
Dialogue windows 4–31
Starting a dialogue 4–31

Idle mode 4–32
Confirming a command 4–32
Selecting a command 4–32
Cancel a command 4–33
Selecting and cancelling a command 4–33
Commands with parameter settings 4–33
Data window 4–34
Reading and setting values 4–34
Reading and setting of non-numerical parameters 4–35
Reading and setting strings 4–36
Setting local terminal time 4–36
Additional information 4–37
Saving the settings in a setting group 4–37
Menu tree 4–41
General 4–41
Disturbance report menu 4–42
Disturbances 4–42
Calculate distance to fault 4–42
Manual trigg 4–42
Clear disturbance report 4–42
Service report menu 4–43
Service values 4–43
Phasors 4–43
Functions 4–43
I/O 4–43
Disturbance report 4–43
Active group 4–43
Time 4–43
Internal signals 4–43
Settings menu 4–44
Disturbance report 4–44
Functions 4–44
Change active group 4–44
Time 4–44
Terminal report menu 4–45
Self- supervision 4–45
Identity number 4–45
Modules 4–45
Analogue inputs 4–45
Configuration menu 4–46
Identifiers 4–46
Analogue inputs 4–46
I/O modules 4–46
Time synchronising source 4–46
Local HMI blockset 4–46
Terminal communication 4–47
SPA communication 4–47
IEC communication 4–47
LON communication 4–47
Remote terminal communication 4–47
Differential function 4–47

Command menu 4–48
Test menu 4–49
Appendix – Menu tree structure for REx 5xx terminals 4–51
Introduction 4–51
Menu tree structure 4–52
Disturbance report 4–52
Service report 4–53
General 4–53
Functions, part I 4–54
Functions, part II 4–55
Functions, part III 4–56
Functions, part IV 4–57
Functions, part V 4–58
I/O 4–59
Remaining menus 4–61
Settings 4–62
Functions, part I 4–63
Functions, part II 4–64
Functions, part III 4–65
Functions, part IV 4–66
Functions, part V 4–67
Functions, part VI 4–68
Remaining menus 4–68
Terminal report 4–69
Configuration 4–70
Part I 4–70
Part II 4–71
Command 4–73
Test 4–74

1 Receiving and storage

Remove the terminal from its transport case and perform a visual inspection to see any possible transport damage. Check that the delivered terminal has the correct data concerning rated current, rated voltage and rated dc voltage on the rating plate at the front of the terminal.

If storing the terminal before installation, it must be done in a dry, dust-free place and preferably in its original transport case.

2 Installation

The terminal is assembled in a closed case of 1/2, 3/4 or full width of a standard 19-inches wide rack. The height is 6U.

If a COMBITEST test-switch is included an additional box type RHGS is used. It has the same principal design as the terminal case and the width 1/4 of 19-inches. It is possible to mount the RHGS-box by the side of a REx 5xx terminal smaller than 19-inches.

2.1 Mechanical installation

The REx 5xx terminal is designed with the mechanical packaging and connecting system described in the “Buyer’s Guide *Series REx 5xx Mechanical design and mounting accessories”*.

Most of the REx 5xx terminals can be flush, semi-flush, rack or wall mounted with the use of different mounting kits. Semi-flush mounting cannot be applied for the 1/1 of 19-inches wide terminals which have ventilating openings at the top and bottom part. The mounting details for semi-flush installation cover the ventilating openings.

The degree of protection is IP 40, according to IEC 529, for terminals with the widths 1/2 and 3/4 of 19-inches. For the 1/1 of 19-inches wide terminals IP 30 is valid for the top and bottom part.

IP 54, for the front area at flush installations, can be obtained with accessories. The accessories are mounted at the production of the terminal which means that it must be specified at the ordering. The rear side fulfils IP 20.

For different types of mounting, special mounting kits are available. All mounting kits contain assembly instructions.

A protective cover for the rear side of the terminal is available.

Avoid dusty, damp places or conditions that cause rapid temperature variations, powerful vibrations or shocks.

2.1.1 19" rack installation

For installation of the terminal in a 19-inches rack structure, mounting angles are needed. If two terminals are mounted side-by-side, an additional side-by-side mounting kit is needed as well. All necessary screw holes in the box are already prepared.

2.1.1.1 Rack mounting - Example 1

One terminal mounted in a 19-inches structure

- If the size of the terminal is 1/2 of 19-inches: One set of mounting details for 1/2x19” terminal width (including eight screws/TORX T20).
- If the size of the terminal is 3/4 of 19-inches: One set of mounting details for 3/4x19” terminal width (including eight screws/TORX T20).
- If the size of the terminal is 1/1 of 19-inches: One set of mounting details for 19” terminal width (including eight screws/TORX T 20).

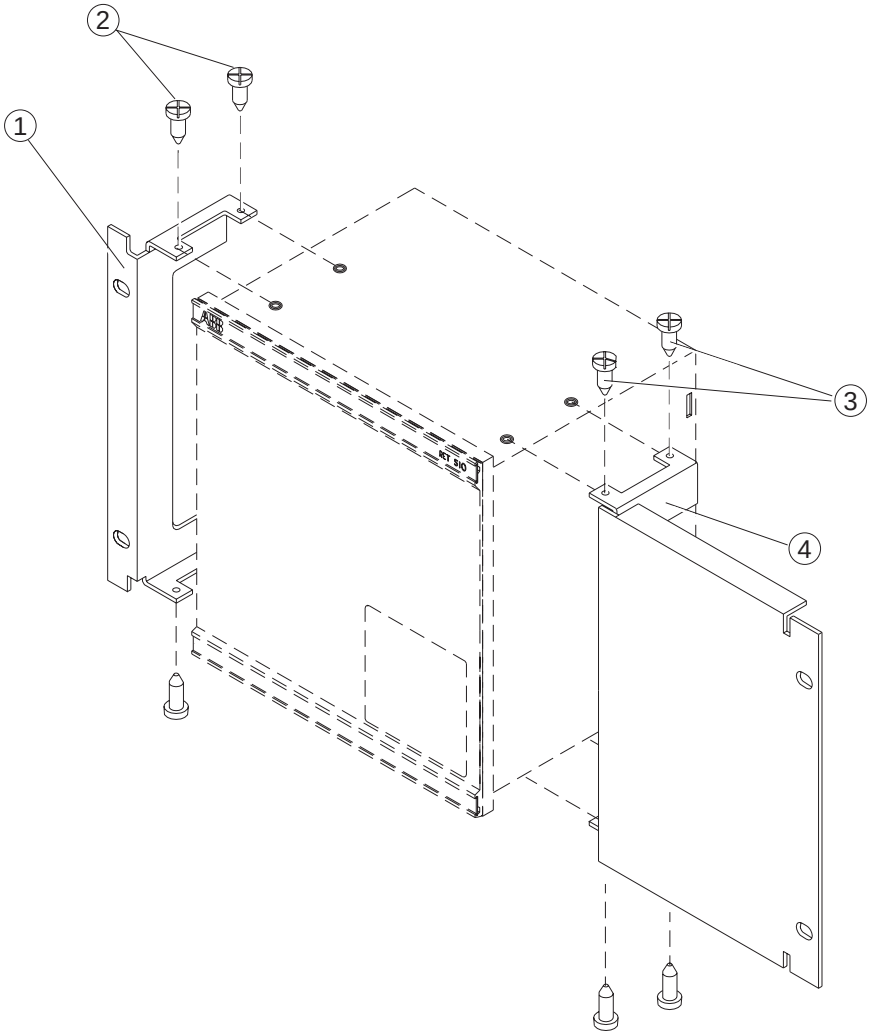

Figure 1: One terminal mounted in a 19” structure.

2.1.1.2 Rack mounting - Example 2

One terminal with an additional box size 1/4 of 19-inches mounted in a 19-inches structure.

- If the size of the terminal is 1/2 of 19-inches: One set of mounting details for 3/4x19” terminal width (including eight screws/TORX T20) and one side-by-side mounting kit (including eight screws/ TORX T 20).

- If the size of the terminal is 3/4 of 19-inches: One set of mounting details for 19” terminal width (including eight screws/TORX T20) and one side-by-side mounting kit (including eight screws/TORX T20).

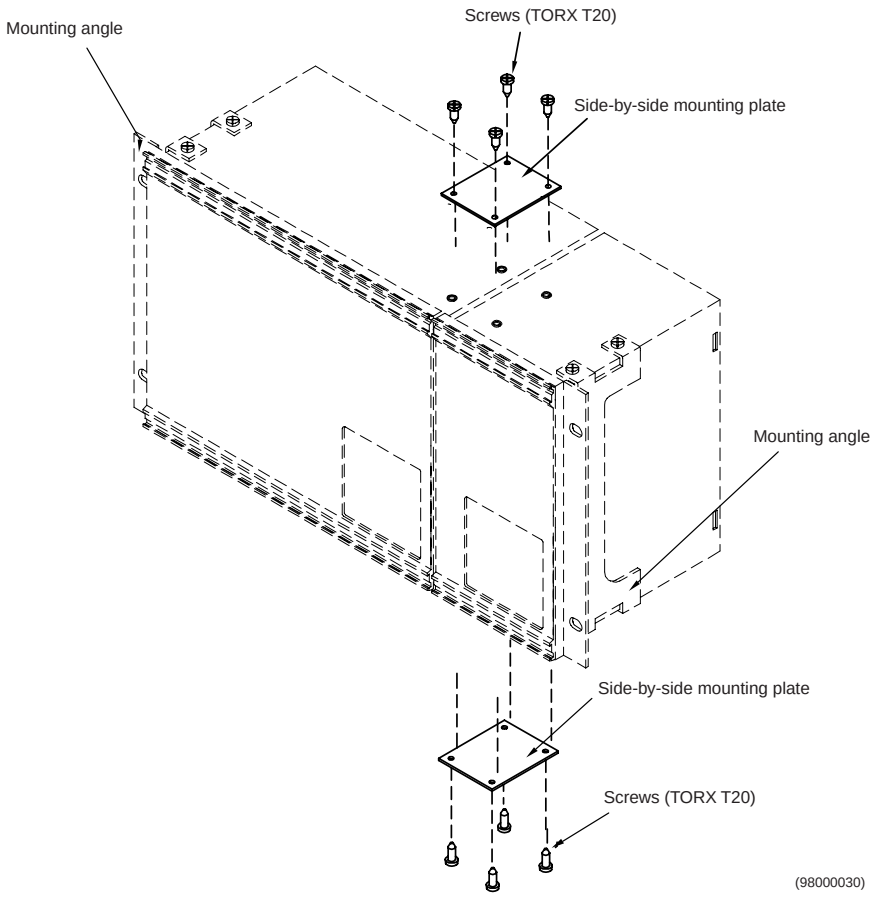

Figure 2: One terminal with an additional box size 1/4 x 19”.

2.1.2 Flush mounting

For flush installation of the terminal in a panel cut-out a mounting kit is available. It includes:

- Four side holders.
- Four small screws (grip type TORX T10).
- Four big screws (grip type TORX T25).
- Assembly instruction.
- A sealing strip.

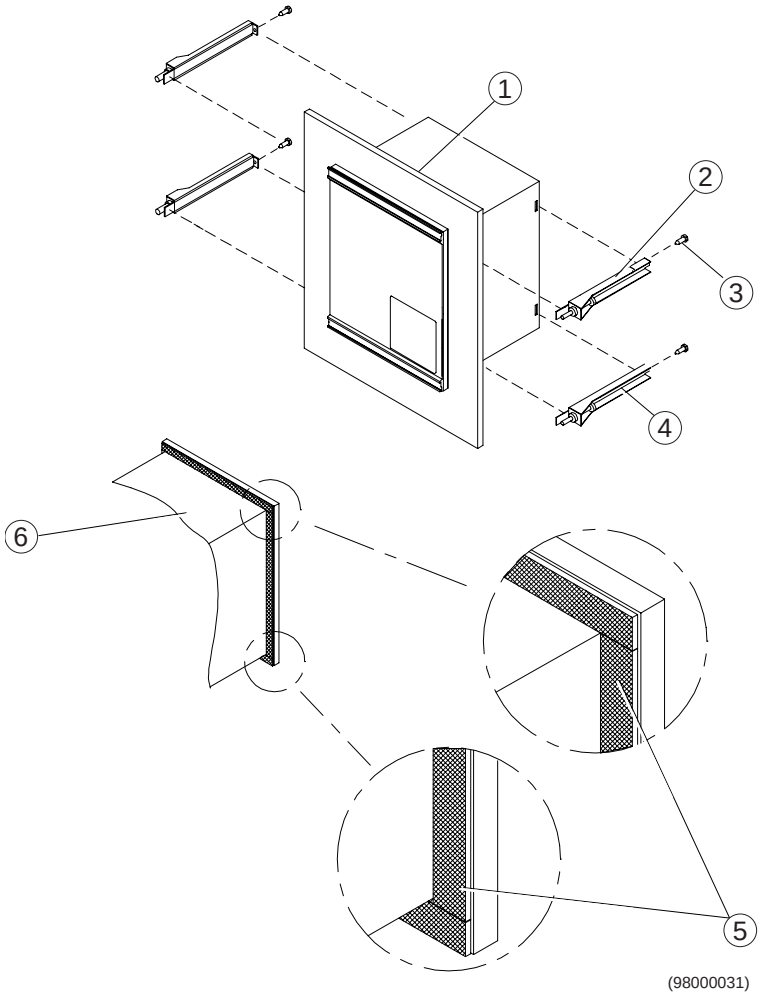

Figure 3: Flush mounting.

2.1.3 Semi-flush mounting

For semi-flush installation of the terminal in a panel cut-out a mounting kit is available. It includes:

- Four side holders.
- Four small screws (grip type TORX T10).
- Four big screws (grip type TORX T25).
- Assembly instruction.
- A sealing strip.
- A distance frame.

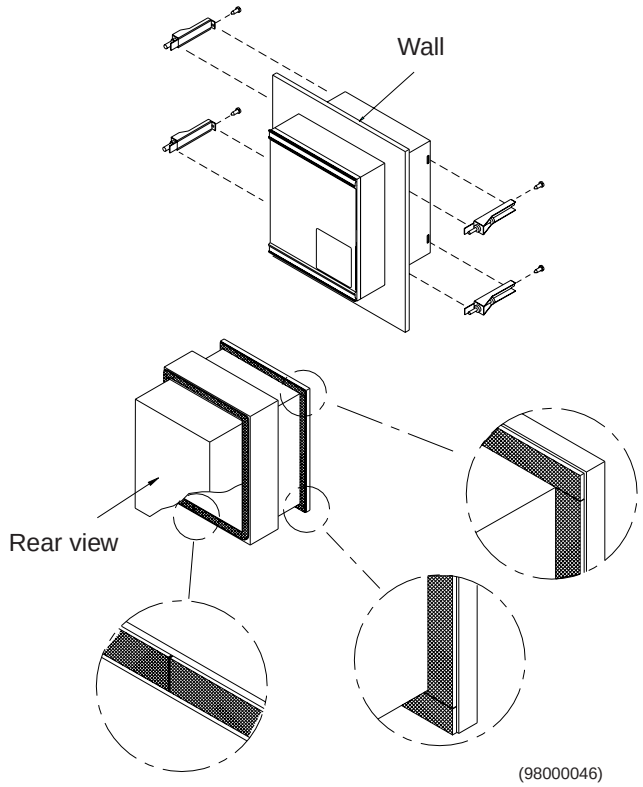

Figure 4: Semi-flush mounting.

The mounting kit for semi-flush mounting consists of the same parts as for flush mounting, except for the additional distance frame. The distance frame shall be mounted around the REx 5xx terminal case before placing the terminal in the cut-out.

2.1.4 Wall mounting

For projection mounting of the terminal on a wall, a mounting kit is available. It includes:

- Two side plates.
- Screws (grip types TORX T20, T25 and T30).
- Two mounting bars to be mounted on the wall.

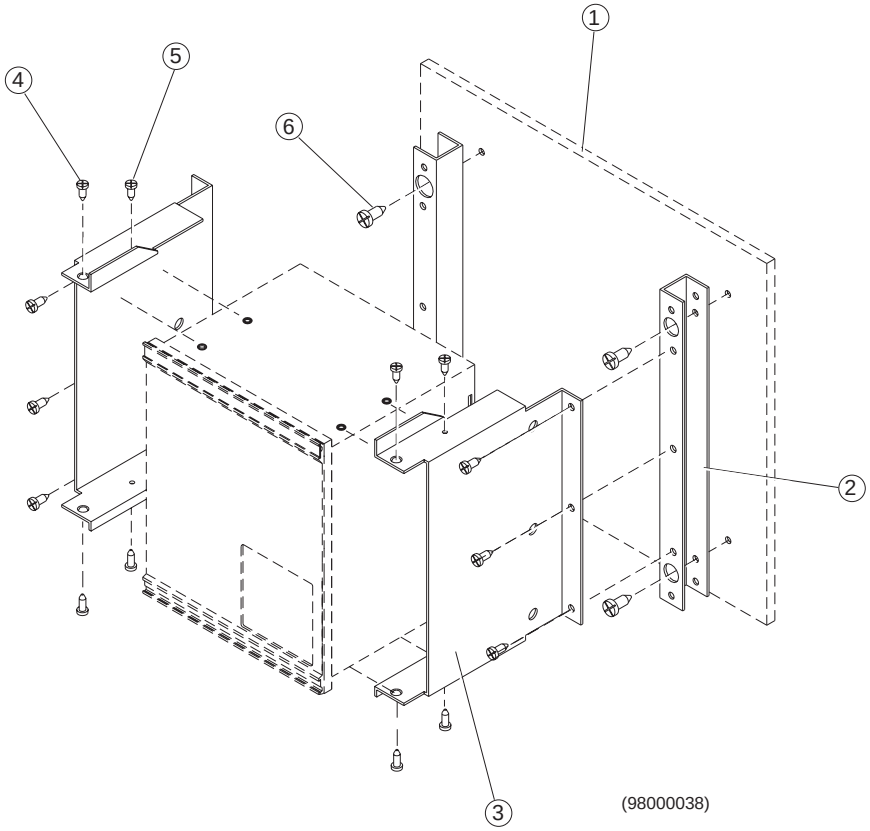

Figure 5: Wall mounting

Two rails provided with screw terminal blocks can be attached to the mounting bars (one above the terminal and one below). Depending on the width of the case there is room for 40-75 screw terminals on each rail. Screw terminal blocks and rails for the blocks are not included in the mounting kit.

2.2 Electrical connections

Make the external connections on the screw terminals according to the terminal diagram. All connections are done on the rear side of the case with a screw-compression type of terminal blocks.

There are two types of connectors for electrical cables:

- *Current connector*, for connections to the current transformers. One conductor up to 4 mm^2 or two conductors up to 2.5 mm^2 can be connected to the external side of each screw terminal.
- *Voltage connector*, for the other connections. One conductor up to 2.5 mm^2 can be connected to each screw terminal.

Each connector has an identification number, for example X11. The female connectors can be marked in the same way. The individual terminals are numbered from top to bottom with 1, 2, 3,... (see a voltage connector in Figure 7:). At installation, all wiring to the female part of the connector is preferably performed before plugging it into the male part.

Identify the cables from the current and voltage transformers regarding phases and connect the cables to the proper screw terminal, according to the terminal diagrams.

The current connector is located on position X11. This connector consists of so called feed-through terminal blocks with flat tabs on the internal side.

The voltage connector, X12, is a dividable connector with two parts:

- A female part for conductor connections.
- A male part mounted inside the case on a circuit board.

Connect a separate 2.5 mm^2 earthing wire from the earthing screw (TORX T20 grip type) on the rear of the REx 5xx terminal, to the panel earthing bar.

Since there are three possible sizes for a REx 5xx terminal, some of the connector identities vary depending on actual size. Figure 6: (a and b) shows typical rear views for the 1/1- and the 3/4 of 19-inch rack. The 1/2 of 19-inch rack size is only equipped with less connectors and I/O-boards than the 3/4. All designation identities are the same between them.

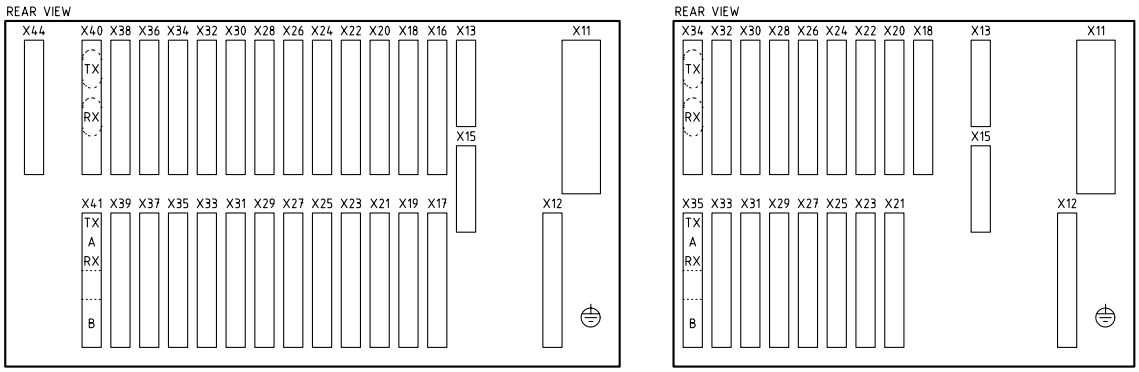

a) b)

Figure 6: Rear view of REx 5xx, full size (a) and 3/4 size (b).

Note: The use of connectors for external connections are specific for the different sizes. The 3/4- and the 1/2 of 19-inch units have the same usage. Below are the lists of designations for different connectors, valid for the units.

Table 1: Connector designations for 1/1 of 19-inch casing

Connector:	**Designation:**
X11	Current transformer inputs
X12	Voltage transformer inputs
X13	Optical fibre connectors for serial communication SPA/IEC 870-5-103
X15	Optical fibre connectors for serial communication LON
X16, X17...	Input/output connectors for I/O modules
X40, X41	Input/output connectors for digital communication module, if ordered. Can also be as X16 etc.
X44	Connector for the power supply module, (in Figure 6:a)

Table 2: Connector designations for 3/4 and 1/2 of 19-inch casing

Connector:	**Designation:**
X11	Current transformer inputs
X12	Voltage transformer inputs
X13	Optical fibre connectors for serial communication SPA/IEC 870-5-103
X15	Optical fibre connectors for serial communication LON
X20, X21...	Input/output connectors for I/O modules

Table 2: Connector designations for 3/4 and 1/2 of 19-inch casing

X34,X35 (3/4) X24,X25 (1/2)	Input/output connectors for digital communication module, if ordered. Can also be as X20 etc.
X18	Connector for the power supply module, (in Figure 6:b)

(Note that the maximum number of optional I/O modules depends on choosen size of the REx 5xx terminal.)

2.3 Voltage connectors

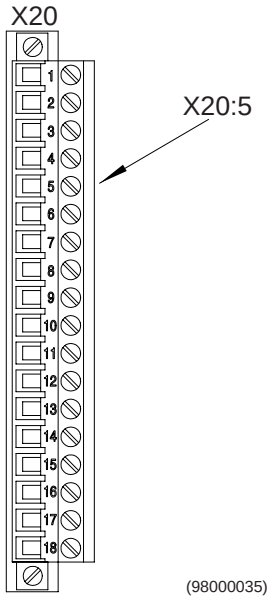

Figure 7: Voltage connector, showing connection point X20:5.

Above all external connectors, on the rear side of the case, the position (e.g. X12) for the connector is marked. The screw terminals of the connectors are numbered from 1 to 12 (current connector) respectively 1 to 18 (voltage connector).

Apply these rules when connecting to the voltage connector:

If you connect to the voltage connector...	**Then...**
One conductor	It can be 0.2-2.5 mm^2
Two conductors	Can be 0.2-1.0 mm^2
Two 1.5 mm^2 conductors	Use a ferrule. One ferrule is contact crimped on the two conductors.

The ferrule (ABB Network Partner's order no. 1MKC 840 003-4 or Phoenix type AI-TWIN 2 · 1,5 - 8 BK) is applied with ZA3 crimping pliers type from Phoenix (see Figure 8:).

No soldering is needed.

If a COMBITEST test-switch is added, COMBIFLEX wires are used.

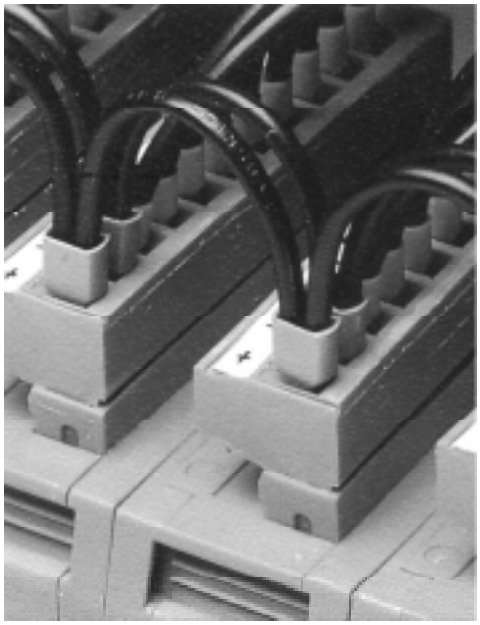

Figure 8: Connected cables with ferrules.

2.4 Fibre optic connections

On each REx 5xx terminal, one or two optical ports can be equipped with a fibre optic bus connection module for serial communication. The connections are done on the rear side of the case by fibre optic connectors type Hewlett Packard (HFBR) for plastic fibres or bayonet type ST for glass fibres.

Each channel consists of one pair of fibres, where one fibre is used for receiving and one for transmitting data. They are distinguished by the colour of their fibre contact. Receiver fibre contacts (blue for plastic, dark grey for glass) must be plugged into the receiver sockets (blue for plastic, dark grey for glass). Transmitter fibre contacts (grey or black) must be plugged likewise into the transmitter sockets (grey or black).

Note: Plug the correct fibre contact into the correct socket.

Fibre optical cables are sensitive to mechanical damages. **Never bend them!** As for the curvature radius, these minimum values are valid:

- 5 cm radius for plastic fibre.
- 15 cm radius for glass fibre.

When the optical fibre shall be connected or disconnected, the termination and not the optical fibre must be used for pulling.

In case the optical fibre is too long and cable straps must be used, the cable strap must not be applied too hard. Always leave some space between the optical fibre and the cable strap.

The Serial communication modules are inserted into slots on the Main processing module. There are four different types of cards — with plastic connections for SPA/IEC 870-5-103, with plastic connections for LON, with glass connection for SPA/IEC 870-5-103 and with glass connection for LON. SPA/IEC 870-5-103 communication can only be applied with a module intended for SPA/IEC 870-5-103 inserted in the SPA/IEC 870-5-103 slot (X13) on the Main processing module. In the same way, LON communication can only be applied with a module intended for LON, inserted in the lower slot (X15).

3 Setting and configuration

All settings can be done in the following ways:

- Locally, via the local human-machine interface (HMI) module.
- Locally, on a PC via the optical front connector (using SMS in the PC).
- Locally or remotely, via one of the communication ports on the rear (using SMS or SCS).

All configuration is performed with CAP 531.

3.1 Local human-machine interface (HMI)

The setting access on the local HMI can be blocked by the binary input signal HMI--BLOCKSET. When this signal is active, the LEDs can still be cleared from the front.

3.2 Front communication

When a PC is used for connection to the front, you need the SMS-BASE and the SM/REx 5xx softwares. For the collection of disturbances to a front connected PC, RECOM is not required because necessary functionality is included in the SM/REx 5xx.

A special cable is needed when connecting a PC to the front of the REx 5xx terminal. This cable can be ordered from ABB Network Partner, order No. 1MKC 950 001-1. It must be plugged into the optical contact on the left side of the local HMI. The other end of the cable shall be plugged directly into the COM-port on the PC. The cable includes an optical contact, an opto/electrical converter and an electrical cable with a standard 9-pole D-sub contact. This ensures a disturbance-free and safe communication with the terminal.

When communicating from a PC, the slave number and baud rate (communication speed) settings must be equal in the PC-program and in the REx 5xx terminal. For further instructions on how to set the parameters in the PC-program, see the *User's Guide* of SMS-BASE and of the SM/REx 5xx.

The slave number and baud rate settings of the front port for the REx 5xx terminal is done on the local HMI at:

Configuration
TerminalCom
SPACom
Front

3.3 Serial communication

Settings can be performed via any of the optical ports at the rear of the REx 5xx terminal. When a PC is connected to the SMS system, the SMS-BASE and the SM/REx 5xx softwares are used. For the collection of analogue data to a PC, RECOM is also required in the PC. Settings can also be done via the SCS system, based on MicroLIBRARY.

For all setting and configuration via the SPA communication bus, the SPA/IEC 870-5-103 port on the rear, it is necessary to first inactivate the restriction for settings. Otherwise, no setting is allowed. This setting only applies for the SPA/IEC 870-5-103 port during SPA bus communication. The already limited communications on the IEC 870-5-103 bus and the LON bus, the LON port, are not affected. The parameter can only be set on the local HMI, and is located at:

Configuration
TerminalCom
SPACom
Rear
SettingRestrict

It is also possible to permit changes between active setting groups with ActGrpRestrict in the same menu section.

When communicating with SMS or SCS via the SPA/IEC 870-5-103 port, the slave number and baud rate (communication speed) settings must be equal in the PC-program and in the REx 5xx terminal. For further instructions of how to set these parameters in the PC-program, see the *User's Guide* of SMS-BASE and of the SM/REx 5xx.

The slave number and baud rate settings of the rear SPA/IEC 870-5-103 port on the REx 5xx terminal, for SPA bus communication, is done on the local HMI at:

Configuration
TerminalCom
SPACom
Rear

The slave number and baud rate settings of the rear SPA/IEC 870-5-103 port on the REx 5xx terminal, for IEC 870-5-103 bus communication, is done on the local HMI at:

Configuration
TerminalCom
IECCom
Communication

When communicating via the LON port, the settings are done with the LNT, LON Network Tool. The settings are shown on the local HMI at:

Configuration
TerminalCom
LON Com

From this menu, it is also possible to send the “ServicePinMsg” to the LNT. For further instructions, see “*Remote communication* (1MRK 580 142-XEN)”.

3.4 Configuration of inputs and outputs

The REx 5xx terminal has a default configuration for all functions, since there is a default *internal configuration* of the terminal. All input and output contacts are also wired to functions in the terminal.

A new configuration is performed with the CAP 531 configuration tool. The binary outputs can be selected from a signal list where the signals are grouped under their function names. It is also possible to specify a user-defined name for each input and output signal.

When downloading a configuration to the REx 5xx terminal with the CAP 531 configuration tool, the terminal is automatically set in configuration mode. When the terminal is set in configuration mode, all functions are blocked. The red LED on the terminal flashes, and the green LED is lit while the terminal is in the configuration mode.

When the configuration is downloaded and completed, the terminal is automatically set into normal mode.

4 Commissioning

Before testing, set the REx 5xx terminal into test mode. This can be done on the local HMI at:

Test
TestMode
Operation

Test/TestMode/Operation = On sets the terminal in test mode, but is not activated until the setting has been saved and the yellow LED starts to flash. The test mode can also be activated via a binary input connected to TEST-INPUT. So select the Operation above to BinInput in that case.

When the terminal is in test mode, the setting of the disturbance report parameters have the effects:

Table 3:

Test/Mode Operation	Test/Mode DisturbReport	Test/Mode DisturbSummary	Then the results are...
On	Off	Off	- Disturbances are not stored. - LED information is not displayed on the HMI and not stored. - No disturbance summary is scrolled on the HMI.
On	Off	On	- Disturbances are not stored. - LED information (yellow - start, red - trip) are displayed on the local HMI but not stored in the terminal. - Disturbance summary is scrolled automatically on the local HMI for the two latest recorded disturbances, until cleared. - The information is not stored in the terminal.
On	On	On or Off	- The disturbance report works as in normal mode. - Disturbances are stored. Data can be read from the local HMI, a front-connected PC, or SMS. - LED information (yellow - start, red - trip) is stored. - The disturbance summary is scrolled automatically on the local HMI for the two latest recorded disturbances, until cleared. - All disturbance data that is stored during test mode remains in the terminal when changing back to normal mode.

Events occurring while the terminal is set in test mode can be reported to the SCS system as below:

- All event are reported.
- No events are reported.
- Events are reported according to the event mask.

This selection is done in SMS or in SCS.

4.1 Test of internal circuits

The A/D conversion module, the power supply module, the main processing module, the signal processing module and the I/O modules are continuously supervised and internal signals present the result (OK, Warning, or Failure). If an internal fault is detected, it will be indicated on the local HMI. In the front-connected PC or SMS, the fault creates an event in the internal event list.

The power supply of the REx 5xx terminal is supervised continuously and if a failure occur, the internal signal INT--FAIL is activated and a special output contact on the power supply module is activated (Internal fail).

4.2 Secondary injection test

Secondary injection testing is a normal part of the commissioning work of a terminal with analogue inputs. Check the operate value of all functions. The test equipment should be able to provide a three-phase supply of voltages and currents. The magnitude of voltage and current as well as the phase angle between voltage and current must be variable. The voltages and currents from the test equipment must be obtained from the same source and they must have a very small harmonic contents. If the test equipment cannot indicate the phase angle, a separate phase-angle meter is necessary.

In the distance protection, the time-lag elements need not to be switched off to record the operating characteristic for the different zones. Operation for each zone can be read as indications on the local HMI.

Note! This terminal is designed for a maximum continuous current of four times the nominal current.

4.3 Check of external connections

When a REx 5xx terminal with line protection functions included is to be switched into service, **it must be checked** that the intended voltages and currents reach the relay. Also check the phase sequence and identify each phase in both the voltage and the current circuits.

Tighten all screw terminals firmly.

4.3.1 COMBITEST test-switch RTXP 24

The REx 5xx terminal can be equipped with a test-switch of type RTXP 24. The test-switch and its associated test plug handle (RTXH 24) are a part of the COMBITEST system, which is described in the “Buyer’s Guide *COMBITEST Test system”*.

When the test-handle is inserted into the test-switch, all current circuits on the transformers side are short-circuited and all voltage circuits and trip circuits are opened, except for terminal 1 and 12. They are used for dc supply of the REx 5xx terminal. The test equipment connected to the test-handle is automatically connected to the terminal.

The test-handle can be plugged into the test-switch or withdrawed from the test-switch to the intermediate position. In this position, the trip circuits are blocked, but the voltage and current circuits are connected to the relay. The test-handle can be plugged into the test-switch or removed from the test-switch completely by releasing the top and bottom latches on the handle.

4.4 Functional test

All included functions are tested according to the test instructions in each function description. The functions can be blocked individually during the test, so only the function which is to be tested is active. In this way, it is possible to test slower back-up measuring functions without the interference of faster measuring functions. The REx 5xx terminal can also be tested without changing the configurations and settings.

The functions are blocked on the local HMI at:

Test
- **TestMode**
  - **BlockFunctions** alt. **BlockEventFunc**

The setting is only valid in test mode. If the functions are blocked in this menu, they are blocked only while the terminal is in the test mode. When testing a function in this blocking feature, remember that not only the actual function must be activated, but the whole sequence of interconnected functions (from measuring inputs to binary output contacts), including logic and so on.

4.5 Test termination

When the test is finished, reconfigure the REx 5xx terminal into normal operating mode on the local HMI at:

Test
- **TestMode**
  - **Operation**

Set Test/TestMode/Operation = Off, and save the test mode setting. The yellow LED is turned off.

5 Fault tracing

5.1 Using information on the local HMI

If an internal fault has occurred, the local HMI displays information under:

TerminalReport
SelfSuperv

Under these menus are the indications of eventual internal failure (serious fault) or internal warning (minor problem) listed.

Shown as well, are the indications regarding the faulty unit according to table 4.

Table 4: Self-supervision signals

HMI information	Status	Signal name	Activates summary signal	Description
InternFail	OK / FAIL	INT--FAIL		Internal fail summary
Intern Warning	OK /WARNING	INT--WARNING		Internal warning summary
CPU-modFail	OK / FAIL	INT--CPUFAIL	INT--FAIL	Main processing module failed
CPU-modWarning	OK /WARNING	INT--CPUWARN	INT--WARNING	Main processing module warning (failure of clock, time synch., fault locator or disturbance recorder)
ADC-module	OK / FAIL	INT--ADC	INT--FAIL	A/D conversion module failed
Slotnn-XXXyy	OK / FAIL	INT--IOyy	INT--FAIL	I/O module yy failed
Real Time Clock	OK /WARNING	INT--RTC	INT--WARNING	Internal clock is reset - Set the clock
Time Sync	OK /WARNING	INT--TSYNC	INT--WARNING	No time synchronisation

Also the internal signals, such as INT--FAIL and INT--WARNING can be connected to binary output contacts for signalling to a control room.

In the Terminal Status - Information, the present information from the self-supervision function can be viewed. Indications of failure or warnings for each hardware module are provided, as well as information about the external time synchronisation and the internal clock. All according to table 4. Loss of time synchronisation can be considered as a warning only. The REx 5xx terminal has full functionality without time synchronisation.

5.2 Using front-connected PC or SMS

In this case, two summary signals appear. Self-supervision summary and CPU-module status summary. These signals can be compared to the internal signals as:

- Self-supervision summary = INT--FAIL and INT--WARNING
- CPU-module status summary = INT--CPUFAIL and INT--CPU-WARN

When an internal fault has occurred, extensive information can be retrieved about the fault from the list of internal events. The list is available in the TERM-STS Terminal Status part of the PC program. This time-tagged list has information with the date and time of the last 40 internal events.

The internal events in the list do not only refer to faults in the terminal, but also to other activities, such as change of settings, clearing of disturbance reports and loss of external time synchronisation.

These events are logged as Internal events:

Table 5:

Event message:		Description:	Set/reset event:
INT--FAIL	Off	Internal fail status	Reset event
INT--FAIL	On		Set event
INT--WARNING	Off	Internal warning status	Reset event
INT--WARNING	On		Set event
INT--CPUFAIL	Off	Main processing module fatal error status	Reset event
INT--CPUFAIL	On		Set event
INT--CPUWARN	Off	Main processing module non-fatal error status	Reset event
INT--CPUWARN	On		Set event
INT--ADC	Off	A/D conversion module status	Reset event
INT--ADC	On		Set event
INT--IOn	Off	In/Out module No. n status	Reset event
INT--IOn	On		Set event
INT--RTC	Off	Real Time Clock (RTC) status	Reset event
INT--RTC	On		Set event
INT--TSYNC	Off	External time synchronisation status	Reset event
INT--TSYNC	On		Set event
DREP-MEMUSED	On	>80% of the disturbance recording memory used	Set event
SETTING CHANGED		Any settings in terminal changed	
DISTREP CLEARED		All disturbances in Disturbance report cleared	

The events in the internal event list are time tagged with a resolution of 1 ms.

This means that when using the PC for fault tracing provides information on the:

- Module that should be changed.
- Sequence of faults, if more than one unit is faulty.
- Exact time when the fault occurred.

6 Repair instruction

If a module in any REx 5xx terminal needs to be repaired, the whole terminal can be removed and sent to ABB.

An alternative is to open the terminal and send only the faulty circuit board to ABB for repair. When a printed circuit board is sent to ABB, it must always be placed in a metallic, ESD-proof, protection bag. The user can also purchase separate modules for replacement.

Note! Follow *all* safety rules for utility power network companies.

Before disassembling the REx 5xx terminal, remember the consequences of the ESD phenomenon. Most electronic components are sensitive to electrostatic discharge and latent damage may occur. Please observe usual procedures for handling electronics and also use an ESD wrist strap. A semi-conducting layer must be placed on the workbench and connected to earth.

Disassemble and reassemble the REx 5xx terminal accordingly:

1. Switch off the dc supply.
2. Short-circuit the current transformers and disconnect all current and voltage connections from the terminal.
3. Disconnect all signal connectors.
4. Disconnect the optical fibres.
5. Unscrew the main back plate of the terminal.
6. If the transformer module is to be changed — unscrew the small back plate of the terminal.
7. Pull out the faulty module.
8. Check that the new module has correct identity number.
9. Check that the springs on the card rail have connection to the corresponding metallic area on the circuit board when the new module is pushed in.
10. Reassemble the terminal.

If the REx 5xx terminal has the optional increased measuring accuracy, a file with unique calibration data for the transformer module is stored in the Main processing module. Therefore it is not possible to change only one of these modules with maintained accuracy.

7 Maintenance

The REx 5xx terminal is self-supervised. No special maintenance is required.

Instructions from the utility power network company and other maintenance directives valid for maintenance of the power system must be followed.

1 Introduction

The local human-machine interface (HMI) provides local communication between the user and the REx 5xx terminal.

Local communication can also be performed by using a PC connected to the local HMI via the special optical interface. Using a PC gives the same functionality as using remote communication within the station monitoring system (SMS) described in corresponding documents.

This chapter describes in detail the structure of the local HMI, basic principles of local human-machine interfacing and basic structure of the terminal menu tree.

The *"Menu tree appendix"* contains the detailed menu tree for the REx 5xx terminal with its all options.

2 Human-machine interface module - design

The local HMI module is equipped with three light emitting diodes (LEDs), a liquid crystal display (LCD), six membrane buttons and an optical connector, for galvanic separation to a RS232 connector, which enables communication with a personal computer (PC).

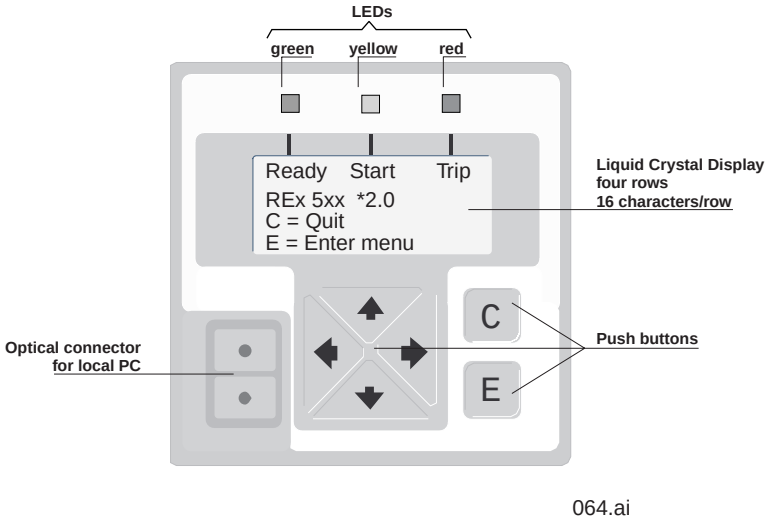

Figure 1: Local human-machine interface module, front panel.

2.1 LEDs

The three LEDs provide primary terminal status information when lit or flashing.

Table 1:

State	Indicates that…
Green LED, steady light	The operating condition of a terminal is normal.
Green LED, flashing light	An internal error is detected. The terminal can be blocked or operate with reduced functionality, depending on the type of error and the internal configuration. The LED will also flash during start-up.
Yellow LED, steady light	One or more disturbances are recorded and stored in the terminal.
Yellow LED, flashing light	The terminal is in test mode.
Red LED, steady light	At least one of the protection functions issued a trip command during a disturbance recording.
Red LED, flashing light	The terminal is in configuration mode or is blocked by an internal or external command.

The HMI has an automatic entry to an idle mode. The idle mode is a kind of screensaver for the LEDs and the LCD display. When everything is normal but no operation has been ordered for a period of time, the HMI enters this idle mode. See section 3.1 for details.

The green LED will be lit and the others switch off when the terminal is in the idle mode. The LEDs will be activated if a disturbance occurs or if any key is pressed during idle mode.

2.2 LCD display

The back-lit liquid crystal display (LCD) provides detailed information about the REx 5xx terminal and the parameter setting. Normally, the backlight is off and no text is displayed. Pressing any button will activate the display. See section 5.1 for details.

The display shuts down after exiting the menu tree (pressing the C button in the highest level) or if no button is pressed for more than 45 minutes.

If a disturbance occurs, the display will be activated and display the disturbance summary until acknowledged. The summary shows short-hand conditions of the last two occurred disturbances.

2.3 Buttons

The number of buttons used on the HMI module is reduced to the minimum acceptable amount to allow a communication as simple as possible for the user. The buttons normally have more than one function, depending on actual dialogue.

Pressing any button in idle mode will activate the LEDs and the display. See section 3.1 for details.

The C button has three main functions, it will:

- **Cancel** any operation in a dialogue window.
- **Exit** the current level in the menu tree. This means, it cancels the current function or the current menu selection and moves one step higher (back) in the menu tree.
- **Clear** the LEDs when the start window is displayed.
- Bring the LEDs and the display into idle mode if pressed when the idle window is displayed (**Quit** function).

The E button mainly provides an **Enter/Execute** function. It activates, for example, the selected menu tree branch. Further it is used to confirm settings and to acknowledge different actions.

The left and right arrow buttons have three functions, to:

- Position the cursor in a horizontal direction, for instance, to move between digits in a number during the parameter setting.
- Move between leafs within the same menu branch.
- Move between the confirmation alternatives (yes, no and cancel) in a command window.

The up and down arrow buttons have three functions, to:

- Move between selectable branches of the menu tree. This function also scrolls the menu tree when it contains more branches than shown on the display.
- Move between the confirmation alternatives in a command window.
- Change parameter values in a data window.

3 HMI modes

When the terminal is left unattended (no HMI button pressed) for a period of time, two things might occur:

- The display exits to the idle mode.
- A disturbance occurs and the HMI enters the reporting mode.

The REx 5xx terminal is automatically set into configuration mode whenever a configuration is downloaded from CAP 531 (the configuration tool).

3.1 Idle mode

When the latest disturbances has been acknowledged or no disturbance is stored in memory, no one has operated the HMI for more than 45 minutes and the terminal is in normal operation, the yellow and red LEDs together with the LCD will be turned off. The green LED will remain active. The HMI has entered the *idle mode*. This only affects the HMI and does not affect the control and protection functions of the REx 5xx terminal.

The display and the LEDs will be activated if any button is pressed or when a new disturbance occurs.

3.2 Reporting mode

The HMI enters the reporting mode whenever a new fault is issued by any protection function since the latest acknowledged disturbance. In the reporting mode, the green LED will be lit and the yellow LED will be lit if a disturbance is recorded. The red LED will be lit only if a protection function issued a trip command.

The display will show a disturbance summary, a short-hand list of the disturbance conditions for the two latest faults.

3.3 Configuration mode

The REx 5xx terminal will automatically be set in configuration mode whenever a configuration is downloaded by the CAP 531 configuration tool. In configuration mode the green LED will be lit and the red LED flashes. No configuration is possible from the HMI.

Note: In the configuration mode, the control and protection functions are inactivated.

3.4 Test mode

The REx 5xx terminal will be set to test mode when the test functions in the test menu branch is selected. In test mode the green LED will be lit and the yellow LED flashes. During test mode it is possible to block any or all of the control and protection functions respectively, as well as the SMS communication.

4 Menu window

The menu window is displayed when the E button is pressed in the start-up or idle window. The menu window displays a part of *the menu tree*.

A menu tree is a hierarcial way of presenting selectable alternatives and functions grouped in a logical manner.

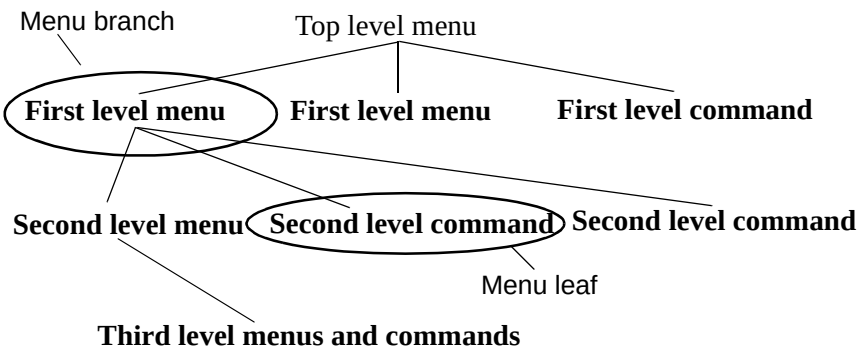

Figure 2: The menu tree.

The tree is divided into *branches*. The lowest level, usually a command, is called a *leaf*. Sometimes the menu structure is also called a *cascading menu*.

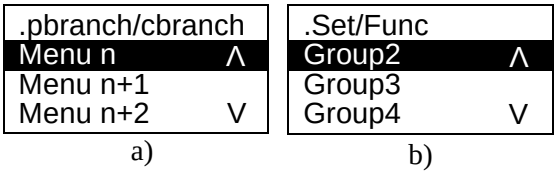

Figure 3: Menu window, generalised operation (a) and typical example (b)

Row one always contains:

- *pbranch*, the name of the previous menu branch. A dot is displayed in front of pbranch if the previous menu branch is below the top level
- *cbranch*, the name of the current menu branch, command or data window.

If the top level menu branch is reached, the terminal product name, REx 5xx, will be displayed instead of *pbranch*.

The remaining three rows always display three instances of the selectable menus or commands of the current menu branch. The up arrow appears in row two when more menus are available before the n:th menu. The down arrow appears in the bottom row when more menus are available after the n+2:th menu. Scroll the menu by pressing the up or down button.

The currently selectable submenu or command is indicated with inverted text. In the example above, Menu n (or the Trip function) is the selectable alternative. Use the up or down buttons to select the appropriate submenu or command. Then press the E button to display the new menu branch or command window.

As an example, Figure 3:b shows the submenu Functions of the Settings menu branch.

Pressing the E button will select settings of Group2 for editing, since the alternative Group2 is displayed inverted. The up and down arrows inform that additional menu alternatives, currently not displayed, are in the list. In this case Group1 and Group4.

5 Dialogue windows

```
Ready Start   Trip
RE.5.. VER 2.0
C=Clear LEDs
E=Enter menu
```

a)

```
Ready Start   Trip
RE.5.. VER 2.0
C=Quit
E=Enter menu
```

b)

Figure 4: Dialogue windows, typical examples.

The dialogue window displays instructions and selectable alternatives. Normally a dialogue window is displayed whenever a menu leaf is reached. If numerical parameter values are to be set, the dialogue window is replaced by the data window, as described in the next section.

Further, the dialogue windows inform how to perform the actions defined in the third and fourth text rows. The first and second rows usually display a headline to provide more information about the proposed action or about the terminal.

The REx 5xx terminal has several different dialogue windows included, depending on the choosen options. The different windows are:

- Start window.
- Idle window.
- Command without a selection.
  Simple decision commands - Yes/No.
- Command with a selection.
  Alternative command selections.
- Command with a cancellation.
- Command with a selection and a cancellation.
- Parameter setting window.

5.1 Starting a dialogue

The start dialogue window, Figure 5:, is displayed if the C button is pressed in the reporting mode (during disturbance report summary display).

```
Ready Start   Trip
RE.5.. VER 2.0
C=Clear LEDs
E=Enter menu
```

Figure 5: Start dialogue window.

Press the:

- C button to clear the LEDs (if required).

- E button to enter the menu tree.

The text *Ready Start Trip* in the dialogue's top row describes the LEDs above the display.

5.2 Idle mode

The local HMI will enter the idle mode when the latest disturbances has been acknowledged or no disturbance is stored in memory, no one has operated the HMI for more than 45 minutes and the terminal is in normal operation.

In the idle mode is the display and the yellow and red LEDs turned off, the green LED still active. The HMI is in a standby mode.

The display and the LEDs will be activated if any button is pressed or when a new disturbance occurs.

5.3 Confirming a command

Figure 6: shows a typical example of a dialogue window with simple decision commands. The instructions in the first two rows describe possible actions. The confirmation alternatives, YES and NO, appear in the bottom row. Move the flashing cursor from one to another alternative by pressing the right or left arrow. After selecting desired alternative, it must be confirmed by pressing the E button.

```
Instruction 1
Instruction 2

YES NO
```

Figure 6: Dialogue window for a command without selection.

Move the cursor to YES and press the E button to confirm the actions (commands) in rows one and two.

Move the cursor to NO and press the E button to exit the dialogue window without doing any changes, or press C with the same result.

5.4 Selecting a command

Figure 7: shows a typical example of a dialogue window with alternative command selections.

```
Instruction 1
Alternative      Λ

YES NO
```

Figure 7: Dialogue window for a command with a selection.

Use the up or down buttons to move the cursor to desired alternative of a command. Select YES and press E to execute the command. Select NO to cancel and exit the dialogue window.

5.5 Cancel a command

Figure 8: shows a typical dialogue window with the possibility to cancel a command. Use the right or left arrow to move between YES, NO and CANCEL. Then press E to confirm. The alternative CANCEL together with a confirmation, will close the dialogue window and the previous window will be shown.

```
Instruction 1
Instruction 2

YES NO CANCEL
```

Figure 8: Dialogue window with a command with cancellation.

5.6 Selecting and cancelling a command

```
Instruction
Command      ∧

YES NO CANCEL
```

Figure 9: Dialogue window for a command with a selection.

In this dialogue window it is possible to select either the Instruction, row one, or the Command, row two. This is indicated by the up or down arrow at the end of the row.

Use the right or left arrow to move the cursor to YES, NO or CANCEL. Select YES to execute the command. Select NO or CANCEL to cancel and exit the dialogue window.

5.7 Commands with parameter settings

This category applies to commands where a certain numeric value, eg. a trip current, must be set. These settings are done in a data window, described in the next section.

6 Data window

The data windows and branches are used to read information and to set parameters.

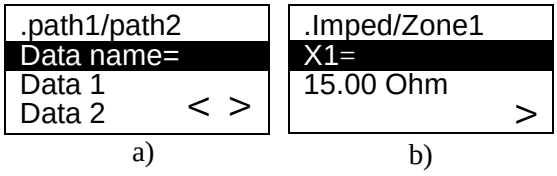

Figure 10: Data window, general setting (10a) and typical example (10b).

Row one has the same information here as in the menu windows. Row two displays the name of a particular parameter and the rows three and four provide more information about the value in the parameter.

The left and right arrows in the bottom row indicate that more data is available in the same menu branch. Press the right or left arrow button to scroll the data.

Figure 10:b shows the data window which appears on the display during the setting procedure for Impedance Zone 1 of the distance protection. Only one value is relevant for the impedance (X1 = 15.00 Ohms). The right arrow indicates that additional parameters are available for Zone 1 (reach in resistive direction, time delay etc.).

6.1 Reading and setting values

The setting procedure is identical for all different types of parameters. Figure 11: shows a typical example of such a procedure.

The top row shows the previous and present menus (.path1/path2). When the parameter name is highlighted, it is possible to enter a new value as described below.

Press the E button to switch from Figure 11:a to Figure 11:b. Row three of the data window displays the current value with corresponding unit (seconds, Ohm etc.) for the parameter.

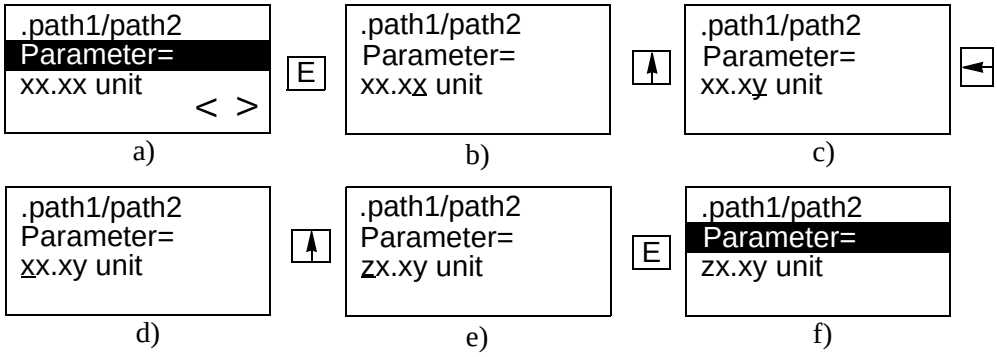

Figure 11: The procedure of setting a real value for a parameter.

It is only possible to change a digit of the current value when the actual digit is underscored by the cursor (second window). The up arrow and down arrows respectively are used to increase or decrease the value. Release the arrow button when desired value is reached. Use the left and right arrows to switch between the digits (Figure 11:c and d).

The new parameter value must be confirmed by pressing E. Thereafter is the parameter changed and the parameter name is highlighted (Figure 11:f), as from the beginning of the procedure.

Note! The new parameter value does not immediately appear in the corresponding setting group because all setting procedures are performed in separate editing areas.

New setting values for a setting group are activated after saving all settings in one of four groups of setting parameters and then exit from the editing area. See “Saving the settings in a setting group” on page 37.

6.2 Reading and setting of non-numerical parameters

Non-numerical parameters can be set to predefined non-numerical values, for example, *On* - *Off* to activate or deactivate a certain function.

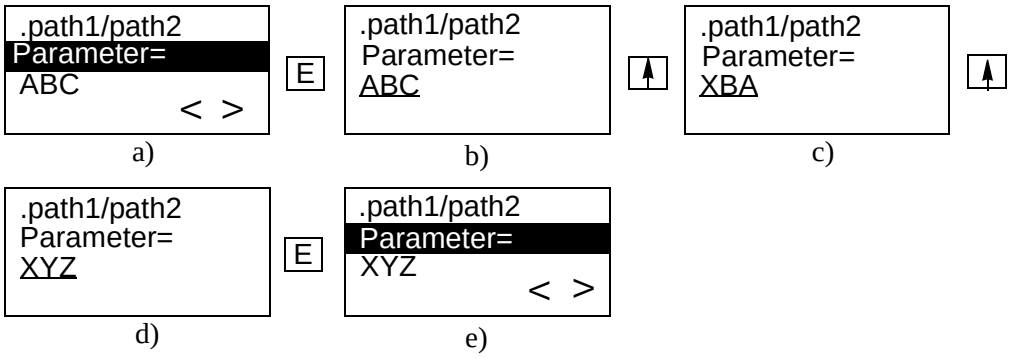

Figure 12: Setting and reading the non-numerical parameters.

The top row shows the previous and present menus (.path1/path2). When the parameter name is highlighted, it is possible to enter a new, predefined, value as described below.

Press E to switch from Figure 12:a to Figure 12:b. The current non-numerical value appears in the third row.

Press the up or down arrow to switch between the predefined, non-numerical, values (Figure 12:b, c, and d). When desired value is displayed, press E to enter it (transition from Figure 12:d to Figure 12:e).

6.3 Reading and setting strings

The strings are the parameters within the REx 5xx terminal that can have user-defined names. Typical examples of strings are identities of substations, lines within substations and names of different input signals connected to the binary inputs of the terminal.

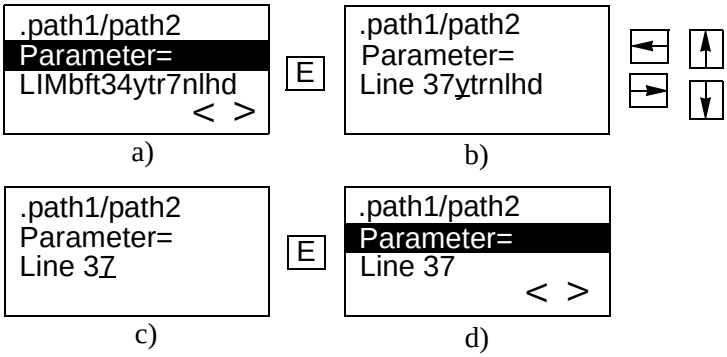

Figure 13: Setting a string.

Each string is displayed in one row and contains a maximum of 13 characters.

Row one in the data window displays the last two branches of the menu tree. Row two displays the present parameter. Row three displays the string (Figure 13:a). A highlighted parameter can be changed.

Press E (Figure 13:a) and a character is underscored by the cursor (Figure 13:b).

Press the up or down arrow button to change the character, or use the left and right arrows to switch between characters in a string (Figure 13:c).

After the string value is set (user-defined value, Figure 13:c), press E and the data window changes as shown in Figure 13:d. This indicates a new value for the string.

6.4 Setting local terminal time

Local date and time for the REx 5xx terminal is set from the Time submenu in the Setting menu, according to Figure 14:..

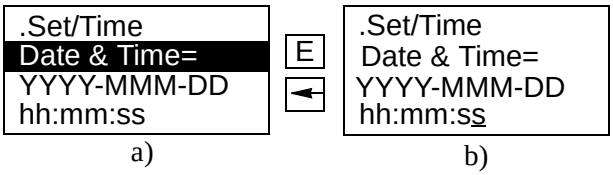

Figure 14: Setting local date and time within the REx 5xx terminal.

Row one in the data window displays the last two branches of the menu tree. Row two displays the date and time parameter. Row three displays year, month and day. Row four displays hour, minutes and seconds.

When the parameter is highlighted (Figure 14:a), press E to change the data window from Figure 14:a to Figure 14:b and enable setting of the date and time. The first digit in the seconds will be underscored by the cursor (Figure 14:b).

Press the up or down arrow button to change the digit, or use the left and right arrows to scroll in the date and time string.

After a new date and time is set, press E and the data window changes to the previous window. A new local time will be displayed.

Real time in the REx 5xx terminal uses the following values:

- *YYYY*, year.
- *MMM*, first three letters of the month's name.
- *DD*, day in the month.
- *hh*, hour.
- *mm*, minutes.
- *ss*, seconds.

Apply the rules for setting a string when to set the month. All other values are real values.

6.5 Additional information

The REx 5xx terminal provides information about its operation, configuration and service conditions. The following information is available:

- Phasors of primary and secondary voltages and currents and other measured values.
- Logical signals activated during the communication procedure.
- Summary of the recorded disturbances under observation.
- Time of the disturbances under observation.
- The software version in the terminal.
- The hardware version in the terminal.

(Also see the *Menu tree - Appendix*).

6.6 Saving the settings in a setting group

The parameter settings as described in the previous sections are always done in a temporary editing area. After editing, a possibility to discard the new settings will be given. If accepting and confirming them, all settings will be saved in appropriate setting group.

After changing one or more parameter, climb up the menu tree by repeatedly pressing C until the Save As Group n dialogue window is displayed.

If, accidentally, pressing the C button once too much, the terminal will display a dialogue window which requires a confirmation. In this window it is necessary to confirm the cancellation of the previous setting activity

by pressing the E button. Otherwise, if pressing C again, the menu tree will return to the previous dialogue window. No settings will be discarded.

The terminal prompts a saving of the changed settings in the same setting group as started with (setting group n in Figure 15:). Confirm the saving or request that the settings shall be saved in another setting group, which is available within the current menu window.

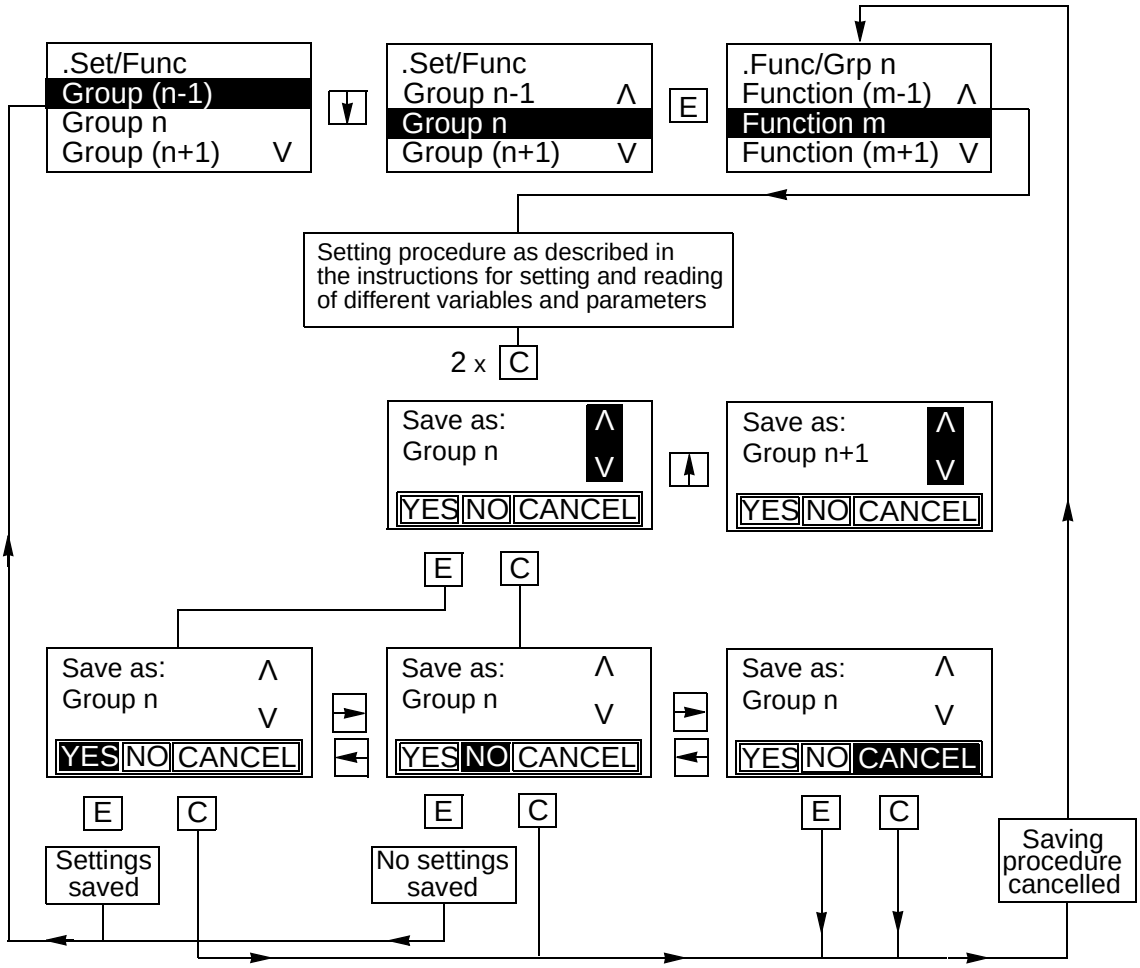

Figure 15: Saving the settings in desired setting group.

Use this function to copy the setting parameters from one setting group to another when it is necessary to change only a few parameters for different operating conditions. Just select and edit appropriate setting group and save it as another.

It is also possible to do a straight copy by selecting a parameter for editing without changing its value. Then press C appropriate number of times, followed by a save with a new name.

Press the E button to save the values which were set in the editing area for the selected setting group.

Confirm the saving when prompted in the dialogue window. Press the E button and the first menu window, for selection of setting groups, is displayed. Then new parameter values appear in the desired setting group.

1 General

This chapter presents the main layout of the menu tree for the local human-machine interface (HMI). The menu tree includes menus for:

- Disturbance report
- Service report
- Settings
- Terminal report
- Configuration
- Command
- Test

Use SMS or SCS to activate or deactivate menus on the local human-machine interface (HMI).
Note! It is possible to completely turn off parts of the menu tree**!**

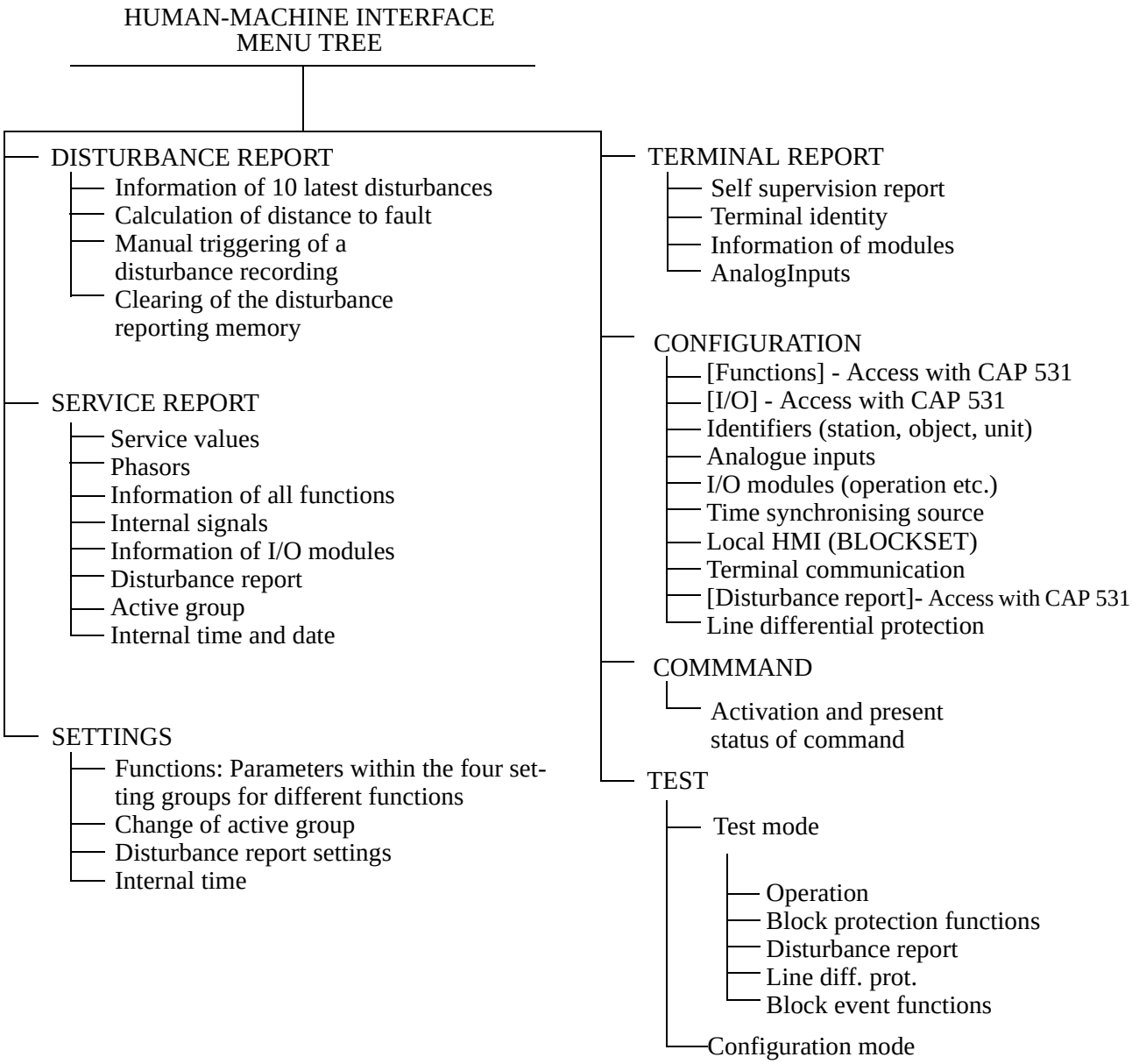

Figure 1: Menu tree for REx 5xx.

2 Disturbance report menu

Use this menu to display the information recorded by the REx 5xx terminal for the 10 latest disturbances. In this menu, these commands are available:

- Display information of a disturbance.
- Calculate the distance to fault.
- Manually trigger the disturbance reporting unit.
- Clear the disturbance report memory.

To view the complete disturbance report, including the result of the event recorder and the disturbance recorder, use a front-connected PC or the SMS or SCS.

2.1 Disturbances

A disturbance instance will show:

- **The time of disturbance**, which is defined as the local terminal date and time when the first triggering signal started the disturbance recording.
- **The trig signal**, which started the recording.
- **Indications**, activated during the recorded disturbance. Indications to be recorded are selected during the terminal configuration procedure.

The fault locator will also report:

- **Fault location**, provides information about the distance to the fault and the fault loop used for the calculation.
- **Trip values**, are displayed as phasors (RMS value and phase angle) of the currents and voltages, before and during the fault.

2.2 Calculate distance to fault

Possible to recalculate the distance to fault with a different fault loop or with different fault locator setting parameters. The recalculation is enabled since trip values are available for each disturbance that caused a phase-selective trip of the distance protection function.

2.3 Manual trigg

Using the manual trigger creates an instant disturbance report. Use this function to get a *snapshot* of the monitored line.

2.4 Clear disturbance report

The disturbance report has a dedicated storage memory, sufficient enough to save the ten latest disturbances. The memory operates by the first-in – first-out principle (FIFO). This means that when the memory is full, the oldest recorded disturbance will be deleted from memory when a new disturbance occurs.
After clearing, the entire disturbance memory will be empty.

3 Service report menu

The Service report menu displays the operating conditions of the terminal as well as measured and calculated values and internal signal status.

3.1 Service values

Presents the mean values of measured current, voltage, active and reactive power and frequency. Available when the transformer module option is installed.

3.2 Phasors

Presents the primary and secondary phasors of measured currents and voltages. Available when the fault locator option is installed.

3.3 Functions

Presents the presently measured values and other information of the different parameters for included functions.

3.4 I/O

Displays present logical values of all binary inputs and outputs of all installed I/O modules in the REx 5xx terminal.

3.5 Disturbance report

Provides information about the below listed items concerning the disturbance recording.

- Available free memory for further disturbance recording.
- The sequence number for the next possibly recorded disturbance (can be viewed or set).
- The present status of analogue triggers that can start the disturbance recorder.

3.6 Active group

The present setting of active groups can be viewed here.

3.7 Time

The current internal time for the REx 5xx terminal can be viewed here. The time is displayed in the form YYYY-MMM-DD and hh:mm:ss. All values but the month are presented with digits. The month is presented with the first three letters in current month.

3.8 Internal signals

Presents information about all functional outputs and internal signals in the terminal.

4 Settings menu

Use this menu to select and set the different parameters for included protection and control functions in the REx 5xx terminal. There are four selectable and editable settings group, each independent of the other, to structure desired functions and applications.

4.1 Disturbance report

This menu includes all setting parameters for the disturbance report. The following features are available:

- **Activate or deactivate** the disturbance report by setting the operation to On or Off.
- **Sequence number** can be set for each recorded disturbance.
- **Sampling rate** is fixed at 1000 Hz.
- **Recording times** for pre-fault, post-fault and time limit shall be set.
- **Triggering and masking** of binary signals selected in the configuration menu shall be set. Up to 48 binary signals are possible.
- **Triggering and recording** of analogue signals shall be set. Up to five voltage signals and five current signals are possible.
- **Fault locator settings** shall be done here. It includes measurement duration and presentation of the result.

4.2 Functions

Settings of the parameters for the included protection and control functions are done here. Four separate setting groups are avaible. First select desired group and then desired function. One group can contain one or several functions.

4.3 Change active group

Select and change the active group setting. Each of the four groups can be set independently of each other.

4.4 Time

To set the internal time in the REx 5xx terminal. The time is set in the form of YYYY-MMM-DD and hh:mm:ss. All values but the month are presented with digits. The month are presented with the first three letters in current month.

5 Terminal report menu

Use this menu to display information of the self supervision, terminal identity, software version, modules and the analogue inputs.

5.1 Self- supervision

The REx 5xx terminal has extensive built-in self-supervision functions to detect if internal faults occurs. If an error occurs, the green LED on the front panel will flash and a warning signal will be activated. Use the self-supervision report to get information about detected faults.

The self-supervision report can also be used to check the status of each installed module as well as CPU, memory and clock operation.

5.2 Identity number

The terminal identity feature contains information as serial number and the software version installed in the terminal.

5.3 Modules

This menu includes information about all included modules, such as I/O-modules and MPM-module (CPU).

5.4 Analogue inputs

Includes information about the analogue inputs, voltage and current, concerning nominal and rated values.

6 Configuration menu

Use this menu to make a general configuration of the REx 5xx terminal. The CAP 531 configuration tool must be used to configure protection and control functions and the I/O modules. The following can be set and configured:

- Identifiers.
- Analogue inputs.
- I/O modules (operation and oscillation).
- Time synchronising source.
- Local HMI blockset.
- Terminal communication.
- Differential function.

6.1 Identifiers

Use the identifiers to specify the location of and to define a terminal within the power system. All identifier names are typed as strings, maximum 16 characters, and the identity numbers are typed with digits. Typical usage are:

- name and number of the station.
- name and number of the bay or object.
- name and number of the actual REx 5xx terminal.

6.2 Analogue inputs

Use this menu to configure general analogue input settings, such as:

- general data about the power network, such as rated voltage, current, frequency and the position of the earthing point.
- CT and VT ratio.
- user-defined labels for the analogue inputs and for the measured voltage, current, active and reactive power and frequency.

6.3 I/O modules

In this menu it is possible to:

- reconfigure added or replaced I/O modules.
- set the level for blocking of oscillating binary inputs.

6.4 Time synchronising source

The internal terminal time can be synchronised with an external unit connected to the SPA/IEC 870-5-103 port or the LON port. It is also possible to use a minute pulse synchronisation signal asserted on a digital input.

6.5 Local HMI blockset

The HMI--BLOCKSET includes the SettingRestrict parameter. The setting restriction enables and disables external settings via the SPA communication bus connected to the rear SPA/IEC 870-5-103 port. This parameter can only be changed from the local HMI.

6.6 Terminal communication

Use this menu to configure the REx 5xx terminal communication buses, if any connected.

6.6.1 SPA communication

Use this menu to set the parameters for the front and rear ports used for SPA communication. Each communication channel must be set separately.

Slave number and baud rate (communication speed) must be set for both the ports. These settings must correspond with the settings in the used PC-program. For the rear port it is possible to set permission of changes between active setting groups, ActGrpRestrict, and the setting restrictions, SettingRestrict, as well. Also see section 6.5.

6.6.2 IEC communication

Use this menu to set slave number and baud rate when to communicate on the IEC 870–5–103 communications bus, also known as *Schnittstelle 6* or VDEW 6. The IEC bus uses the same rear optic port as the SPA bus, but the settings must be done separately. Other settings and blocking of some functions can also be done.

6.6.3 LON communication

Use this menu to view node information as address and location, which are set from the LON Network Tool, as well as the Neuron identity. Functions for address setting during installation (ServicePinMSG), LON configuration reset (LONDefault) and session timers are also available.

Note: Session timers are for advanced usage and should only be changed upon recommendation from ABB Network Partner AB.

6.6.4 Remote terminal communication

Use this menu to configure the different protection fiber optics communication bus. This communication requires certain digital communication modules. The parameters to set are:

- the bit rate
- the fiber optics transmitter output power
- the terminal master/slave operation.

6.7 Differential function

Use this menu to configure the differential protection functions as a part of networked terminal system. Possible to change:

- the differential synchronisation scheme
- the master terminal identity
- the remote (slave) terminal identity.

7 Command menu

Use this menu to manually select and execute any single or multiple signal command, as defined from the configuration menu or the CAP 531 configuration tool. The signal(s) can be connected to any internal function or to a binary output of the terminal. It is possible to assign a user-defined name to these binary signals.

8 Test menu

Use this menu to enable easier secondary injection tests of the REx 5xx terminal. It is possible to block functions to prevent trip of circuit breakers and activation of alarm signals etc. to the control room during the testing activities.

The selectable modes, from the HMI, is the TestMode and ConfigMode.

The test mode allows:

- Setting the terminal in test mode operation.
- Blocking of one or several protection and control functions (selectable) during test operation.
- Blocking of one or several event functions (selectable) during test operation.
- Setting the disturbance report and the disturbance summary to On or Off during test operation.
- Special test mode to facilate the testing of the line differential protection function. This Diff. TestMode disables the trip-out from the remote terminal and enables test from one end.

The configuration mode allows:

- Setting the terminal in configuration mode operation. This will automatically be done when down-loading a configuration from the CAP 531 configuration tool. When the down-loading is completed, the terminal automatically enters the normal mode.

1 Introduction

This appendix describes the menu tree structure for the complete REx 5xx series of terminals. This means that the menus in a certain terminal is only a part of what is shown in this appendix. What is shown in a terminal depends on:

- the type of terminal
- installed terminal options.

In some terminals, the menu tree can be partly hidden (programmable).

To operate the local human machine interface (HMI), refer to the section *"Local human-machine communication"*.

The text *"According to function block"*, present at menu leafs, is meant as a reference to the corresponding function block description that can be found in the sections *"General functions"* and/or *"Functions"*.

2 Menu tree structure

2.1 Disturbance report

REX 5XX/DistRep
Disturbances
CalcDistToFlt
ManualTrig
ClearDistRep

.DistRep/Disturb
Disturbance1
Disturbance2
Disturbance3
Disturbance4
Disturbance5
Disturbance6
Disturbance7
Disturbance8
Disturbance9
Disturbance10

.Disturb/Dist1
TimeOfDisturb
TrigSignal
Indications
FaultLocator
TripValues

CalcDistToFault, command with confirmation according to the section *"Local human-machine interface"*

.Dist1/Time
TimeOfDisturb
.Dist1/TrigSig
TrigSignal
.Dist1/Indic
Indications
.Dist1/FltLoc
FltLoop
Dist

.TripVal/PreFlt
U1[1]
U2[1]
U3[1]
U4[1]
U5[1]
I1[1]
I2[1]
I3[1]
I4[1]
I5[1]
Frequency[1]

.DistRep/CalcFlt
Disturbance1
Disturbance2
Disturbance3
Disturbance4
Disturbance5
Disturbance6
Disturbance7
Disturbance8
Disturbance9
Disturbance10

.Dist1/TripVal
PreFault
Fault

.TripVal/Fault
U1[1]
U2[1]
U3[1]
U4[1]
U5[1]
I1[1]
I2[1]
I3[1]
I4[1]
I5[1]

Manual Trig, command with confirmation according to the section *"Local human-machine interface"*

Clear DistRep, command with confirmation according to the section *"Local human-machine interface"*

1. User name. Default name is shown

2.2 Service report

2.2.1 General

REX 5XX/ServRep	.ServRep/ServVal	.Phasors/Primary
ServiceValues	U[1]	U1[1]
Phasors	I[1]	U2[1]
Functions	P[1]	U3[1]
I/O	Q[1]	U4[1]
DisturbReport	f[1]	U5[1]
ActiveGroup		I1[1]
Time	.ServRep/Phasors	I2[1]
	Primary	I3[1]
	Secondary	I4[1]
		I5[1]

.Phasors/Second
U1[1]
U2[1]
U3[1]
U4[1]
U5[1]
I1[1]
I2[1]
I3[1]
I4[1]
I5[1]

1. User name. Default name is shown

2.2.2 Functions, part I

REX 5XX/ServRep	.ServRep/Func	.Func/Imp	.Imp/ZGEN	.ZGEN/ImpVal	.GFC/Outputs
ServiceValues	Impedance	General	ImpValues	XL1	Signals according to function block
Phasors	Differential	GenFltCriteria	ImpDirection	RL1	
Functions	InstantOC	PhaseSelection		XL2	
I/O	TimeDelayOC	HighSpeed	.Imp/GFC	RL2	.PHS/Outputs
DisturbReport	OverLoad	HighSpeedBO	FuncOutputs	XL3	Signals according to function block
ActiveGroup	Stub	Zone1		RL3	
Time	PoleDiscord	Zone2	.Imp/PHS		
	BreakerFailure	Zone3	FuncOutputs	.ZDIR/ImpDir	.HS/Outputs
	EarthFault	Zone4		L1	Signals according to function block
	TimeDelayUV	Zone5	.Imp/HS	L2	
	TimeDelayOV	ComLocal	FuncOutputs	L3	
	LossOfVoltage	ZCommunication			.HSBO/Outputs
	DeadLineDet	Com1P	.Imp/HSBO		Signals according to function block
	BrokenConduct	ComIRevWei	FuncOutputs		
	CTSupervision	PowerSwingDet			
	FuseFailure	PowerSwingLog	.Imp/ZM1		.ZM1/Outputs
	AutoRecloser	SwitchOntoFlt	FuncOutputs		Signals according to function block
	SynchroCheck				
	Trip		.Imp/ZM2		
	ComChanTest		FuncOutputs		.ZM2/Outputs
	FaultLocator				Signals according to function block
	ActiveGroup		.Imp/ZM3		
	IEC103Command		FuncOutputs		
	DisturbReport				.ZM3/Outputs
	InternalSignals		.Imp/ZM4		Signals according to function block
	Test		FuncOutputs		
	Time				
	MI11--61error		.Imp/ZM5		.ZM4/Outputs
	CD01--11		FuncOutputs		Signals according to function block
	AND1--2				
	OR1--2				
	XOR1				.ZM5/Outputs
	INV				Signals according to function block
	SR				
	Timer				
	TimerLong				
	Pulse				
	Pulse2				
	PulseLong1				
	PulseLong2				

2.2.3 Functions, part II

REX 5XX/ServRep	.ServRep/Func	.Func/Imp	.Imp/ZCLC	.ZCLC/Outputs
ServiceValues	Impedance	General	FuncOutputs	Signals according to function block
Phasors	Differential	GenFltCriteria		
Functions	InstantOC	PhaseSelection	.Imp/ZCOM	
I/O	TimeDelayOC	HighSpeed	FuncOutputs	.ZCOM/Outputs
DisturbReport	OverLoad	Direction		Signals according to function block
ActiveGroup	Stub	Zone1	.Imp/ZC1P	
Time	PoleDiscord	Zone2	FuncOutputs	
	BreakerFailure	Zone3		ZC1P/Outputs
	EarthFault	Zone4	.Imp/ZCAL	Signals according to function block
	TimeDelayUV	Zone5	FuncOutputs	
	TimeDelayOV	ComLocal		
	LossOfVoltage	ZCommunication	.Imp/PSD	.ZCAL/Outputs
	DeadLineDet	Com1P	FuncOutputs	Signals according to function block
	BrokenConduct	ComIRevWei		
	CTSupervision	PowerSwingDet	.Imp/PSL	
	FuseFailure	PowerSwingLog	FuncOutputs	.PSD/Outputs
	AutoRecloser	SwitchOntoFlt		Signals according to function block
	SynchroCheck		.Imp/SOTF	
	Trip		FuncOutputs	
	ComChanTest			.PSL/Outputs
	FaultLocator			Signals according to function block
	ActiveGroup			
	IEC103Command			
	DisturbReport			.SOTF/Outputs
	InternalSignals			Signals according to function block
	Test			
	Time			
	MI11--61error			
	CD01--11			
	AND1--2			
	OR1--2			
	XOR1			
	INV			
	SR			
	Timer			
	TimerLong			
	Pulse			
	Pulse2			
	PulseLong1			
	PulseLong2			

2.2.4 Functions, part III

REX 5XX/ServRep	.ServRep/Func	.Func/DIFL	.DIFL/DiffVal	.Com/ComInfo
ServiceValues	Impedance	DiffValues	IDiffL1	TransmDelay
Phasors	Differential	DiffCom	IBiasL1	NoOfShlnterr
Functions	InstantOC	FuncOutputs	IDiffL2	NoOfMedlnterr
I/O	TimeDelayOC		IBiasL2	NoOfLonglnterr
DisturbReport	OverLoad	.Func/IOC	IDiffL3	CommStatus
ActiveGroup	Stub	FuncOutputs	IBiasL3	NoOfTXD
Time	PoleDiscord			NoOfRXD
InternalSignals	BreakerFailure	.Func/TOC	.DIFL/ChInfo	SyncError
	EarthFault	FuncOutputs	DiffCom	
	TimeDelayUV		ClearCounters	Clear Counters, command with confirmation according to the section *"Local human-machine interface"*
	TimeDelayOV	.Func/OVLD		
	LossOfVoltage	FuncOutputs	.DIFL/Outputs	
	DeadLineDet		Signals according to function block	
	BrokenConduct	.Func/STUB		
	CTSupervision	FuncOutputs		
	FuseFailure		.IOC/Outputs	
	AutoRecloser	.Func/PD	Signals according to function block	
	SynchroCheck	FuncOutputs		
	Trip			
	ComChanTest	.Func/BFP	.TOC/Outputs	
	FaultLocator	FuncOutputs	Signals according to function block	
	ActiveGroup			
	IEC103Command	.Func/EarthF		
	DisturbReport	TimeDelayEF	.OVLD/Outputs	
	InternSignals	4StepEF	Signals according to function block	
	Test	EFCom		
	Time	ComIRevWei		
	MI11--61error		.STUB/Outputs	
	CD01--11		Signals according to function block	
	AND1--2			
	OR1--2			
	XOR1		.CCHT/Outputs	
	INV		Signals according to function block	
	SR			
	Timer			
	TimerLong		.BFP/Outputs	.TEF/Outputs
	Pulse		Signals according to function block	Signals according to function block
	Pulse2			
	PulseLong1			
	PulseLong2		.EarthF/TEF	.EF4/Outputs

(2.2.4 Functions part III cont.)

FuncOutputs	Signals according to function block
.EarthF/EF4	
FuncOutputs	.EFC/Outputs
	Signals according to function block
.EarthF/EFC	
FuncOutputs	
	.EFCA/Outputs
.EarthF/EFCA	Signals according to function block
FuncOutputs	

2.2.5 Functions, part IV

REX5XXServRep	.ServRep/Func	.Func/TUV	.TUV/Outputs	.AR01/ARCount[1]	.ARCount/Count
Service Values	Impedance	FuncOutputs	Signals according to function block	Counters	1ph-Shot1
Phasors	Differential			ClearCounters	3ph-Shot1
Functions	InstantOC	.Func/TOV			3ph-Shot2
I/O	TimeDelayOC	FuncOutputs	.TOV/Outputs	.AR01/Outputs[1]	3ph-Shot3
DisturbReport	OverLoad		Signals according to function block	Signals according to function block	3ph-Shot4
ActiveGroup	Stub	.Func/LOV			NoOfReclosings
Time	PoleDiscord	FuncOutputs			
	BreakerFailure		.LOV/Outputs		Clear Counters, command with confirmation according to the section *"Local human-machine interface"*
	EarthFault	.Func/DLD	Signals according to function block		
	TimeDelayUV	FuncOutputs			
	TimeDelayOV			.SYN1/SyncVal[2]	
	LossOfVoltage	.Func/BRC	.DLD/Outputs	UDiff	
	DeadLineDet	FuncOutputs	Signals according to function block	FreqDiff	
	BrokenConduct			PhaseDiff	
	CTSupervision	.Func/CTSU			
	FuseFailure	FuncOutputs	.BRC/Outputs	.SYN1/Outputs[2]	
	AutoRecloser		Signals according to function block	Signals according to function block	
	SynchroCheck	.Func/FUSE			
	Trip	FuncOutputs			
	ComChanTest		.CTSU/Outputs	TRIP/Outputs[2]	
	FaultLocator	.Func/CCHT	Signals according to function block	Signals according to function block	
	ActiveGroup	FuncOutputs			
	IEC103Command				
	DisturbReport	.Func/AutoRec	.FUSE/Outputs	CCHT/Outputs[2]	
	InternSignals	AutoRecloser1	Signals according to function block	Signals according to function block	
	Test	AutoRecloser2			

(2.2.5 Functions part IV cont.)

Time	AutoRecloser3	
MI11--61error	AutoRecloser4	.AutoRec/AR01[1]
CD01--11	AutoRecloser5	Counters
AND1--2	AutoRecloser6	FuncOutputs
OR1--2		
XOR1	.Func/Sync	
INV	SynchroCheck1	
SR	SynchroCheck2	
Timer	SynchroCheck3	.Sync/SYN1[2]
TimerLong	SynchroCheck4	SyncValues
Pulse		FuncOutputs
Pulse2	.Func/TRIP	
PulseLong1	FuncOutputs	
PulseLong2		

1. AR02 to AR06 as AR01
2. SYN2 to SYN4 as SYN1

2.2.6 Functions, part V

REX 5XX/ServRep	.ServRep/Func	.Func/FLOC	.FLOC/Outputs
ServiceValues	Impedance	FuncOutputs	Signals according to function block
Phasors	Differential		
Functions	InstantOC	.Func/GRP	
I/O	TimeDelayOC	FuncOutputs	.GRP/Outputs
DisturbReport	OverLoad		Signals according to function block
ActiveGroup	Stub		
Time	PoleDiscord	.Func/ICOM	
	BreakerFailure	Signals according to function block	.Func/INV
	EarthFault		Signals according to function block
	TimeDelayUV		
	TimeDelayOV	.Func/DREP	
	LossOfVoltage	Signals according to function block	.Func/SR
	DeadLineDet		Signals according to function block
	BrokenConduct		
	CTSupervision	.Func/INT	
	FuseFailure	Signals according to function block	.Func/TM
	AutoRecloser		Signals according to function block
	SynchroCheck		
	Trip	.Func/TEST	

(2.2.6 Functions part V cont.)

ComChanTest	Signals according to function block	.Func/TL
FaultLocator		Signals according to function block
ActiveGroup		
IEC103Command	.Func/Time	
DisturbReport	Signals according to function block	.Func/TP
InternSignals		Signals according to function block
Test		
Time	.Func/MI1Err	
MI11--61error	Signals according to function block	.Func/TP2
CD01--11		Signals according to function block
AND1--2		
OR1--2	.Func/CD01	
XOR1	Signals according to function block	.Func/TQ1
INV		Signals according to function block
SR		
Timer	.Func/AND 1-2	
TimerLong	Signals according to function block	.Func/TQ2
Pulse		Signals according to function block
Pulse2		
PulseLong1	.Func/OR 1-2	Signals according to function block
PulseLong2	Signals according to function block	
	.Func/XOR	
	Signals according to function block	

2.2.7 I/O

REX 5XX/ServRep	.ServRep/I/O	.I/O/BIM1	.BIM1/Outputs
ServiceValues	Slot12-BIM1[1]	FuncOutputs	Signals according to function block
Phasors	Slot14-IOM2[1]		
Functions	Slot16-BOM3[1]	.I/O/IOM2	
I/O	Slot18-MIM1[1]	FuncOutputs	.IOM2/Outputs
DisturbReport	Slot20-BIM5[1]		Signals according to function block
ActiveGroup	Slot22-IOM6[1]	.I/O/BOM3	
Time	Slot24-BOM7[1]	FuncOutputs	
	Slot26-MIM2[1]		.BOM3/Outputs
	Slot28-BIM9[1]	.I/O/MIM1	Signals according to function block
	Slot30-IOM10[1]	FuncOutputs	

(2.2.7 I/O cont.)

Slot32-BOM11[1]		
Slot34-MIM3[1]	.I/O/RTC1	.MIM1/Outputs
Slot36-BIM13[1]	FuncOutputs	Signals according to function block
RemTermCom1		
RemTermCom2	.I/O/RTC2	
	FuncOutputs	.RTC1/Outputs
		Signals according to function block
		.RTC2/Outputs
		Signals according to function block

1. This is an example of a full framework

2.2.8 Remaining menus

REX 5XX/ServRep	.ServRep/DREP	.DREP/Memory
ServiceValues	MemoryUsed	MemoryUsed
Phasors	SequenceNo	
Functions	AnalogTrigStat	.DREP/SeqNo
I/O		SequenceNo
DisturbReport	.ServRep/GRP	
ActiveGroup	ActiveGroup	.DREP/AnaTrig
Time		U1>[1]
	.ServRep/TIME	U1<[1]
	Date&Time	U2>[1]
		U2<[1]
		U3>[1]
		U3<[1]
		U4>[1]
		U4<[1]
		U5>[1]
		U5<[1]
		I1>[1]
		I1<[1]
		I2>[1]
		I2<[1]
		I3>[1]
		I3<[1]
		I4>[1]
		I4<[1]
		I5>[1]
		I5<[1]
		.INT/Outputs
		Signals according to function block

1. User name. Default name is shown

2.3 Settings

.REX 5XX/Set	.Set/DREP	.DREP/Oper	.Binary/Input1[3]
DisturbReport	Operation	Operation	UserName[2]
Functions	SequenceNo	PostRetrig	TrigOperation
ChangeActGrp	SamplingRate		TrigLevel
Time	RecordingTimes	.DREP/SeqNo	IndicationMask
	BinarySignals	SequenceNo	SetLed
	AnalogSignals		
	FaultLocator	.DREP/SRate	.Binary/Input48[3]
		SamplingRate	UserName[2]
			TrigOperation
		.DREP/RecTime	TrigLevel
		tPre	IndicationMask
		tPost	SetLed
		tLim	
			.Analog/U1[3]
		.DREP/Binary	UserName[2]
		Input1[1]	Operation
		Input2[1]	>TrigOperation
		-	>TrigLevel
		-	<TrigOperation
		Input47[1]	<TrigLevel
		Input48[1]	
			.Analog/I1[3]
		.DREP/Analog	UserName[2]
		U1[1]	Operation
		U2[1]	>TrigOperation
		U3[1]	>TrigLevel
		U4[1]	<TrigOperation
		U5[1]	<TrigLevel
		I1[1]	
		I2[1]	
		I3[1]	
		I4[1]	
		I5[1]	
		.DREP/FltLoc	
		DistanceUnit	

1. User name. Default name is shown
2. Read only
3. User name will not be shown

2.3.1 Functions, part I

REX 5XX/Set	.Set/Func	.Func/Grp1	.Grp1/LRF	.Imp/ZGEN
DisturbReport	Group1	LineReference	Settings according to function block	Settings according to function block
Functions	Group2	Impedance		
ChangeActGrp	Group3	Differential		
Time	Group4	InstantOC	.Grp1/Imp	.Imp/GFC
		TimeDelayOC	General	Settings according to function block
		OverLoad	GenFltCriteria	
		Stub	PhaseSelection	
	Save as Grp1	PoleDiscord	HighSpeed	.Imp/PHS
	Save as Grp 2	BreakerFailure	Direction	Settings according to function block
	Save as Grp 3	EarthFault	Zone1	
	Save as Grp 4	TimeDelayUV	Zone2	
	Command with Confirmation according to the section *"Local human-machine interface"*	TimeDelayOV	Zone3	.Imp/HS
		LossOfVoltage	Zone4	Settings according to function block
		DeadLineDet	Zone5	
		BrokenConduct	ComLocal	
		CTSupervision	ZCommunication	.Imp/ZDIR
		FuseFailure	Com1P	Settings according to function block
		AutoRecloser	ComIRevWei	
		SynchroCheck	PowerSwingDet	
		Trip	PowerSwingLog	.Imp/ZM1
		ComChantest	SwitchOntoFlt	Settings according to function block
				.Imp/ZM2
				Settings according to function block
				.Imp/ZM3
				Settings according to function block
				.Imp/ZM4
				Settings according to function block
				.Imp/ZM5
				Settings according to function block

2.3.2 Functions, part II

REX 5XX/Set	.Set/Func	.Func/Grp1	.Grp1/Imp	.Imp/ZCLC
DisturbReport	Group1	Line Reference	General	Settings according to function block
Functions	Group2	Impedance	GenFltCriteria	
ChangeActGrp	Group3	Differential	PhaseSelection	
Time	Group4	InstantOC	HighSpeed	.Imp/ZCom
		TimeDelayOC	Direction	Settings according to function block
		OverLoad	Zone1	
		Stub	Zone2	
		PoleDiscord	Zone3	.Imp/ZC1P
	Save as Grp1	BreakerFailure	Zone4	Settings according to function block
	Save as Grp 2	EarthFault	Zone5	
	Save as Grp 3	TimeDelayUV	ComLocal	
	Save as Grp 4	TimeDelayOV	ZCommunication	.Imp/ZCAL
	Command with Confirmation according to the section *"Local human-machine interface"*	LossOfVoltage	Com1P	Settings according to function block
		DeadLineDet	ComIRevWei	
		BrokenConduct	PowerSwingDet	
		CTSupervision	PowerSwingLog	.Imp/PSD
		FuseFailure	SwitchOntoFlt	Settings according to function block
		AutoRecloser		
		SynchroCheck		
		Trip		.Imp/PSL
		ComChantest		Settings according to function block
				.Imp/SOTF
				Settings according to function block

2.3.3 Functions, part III

REX 5XX/Set	.Set/Func	.Func/Grp1	.Grp1/Diff
DisturbReport	Group1	LineReference	Settings according to function block
Functions	Group2	Impedance	
ChangeActGrp	Group3	Differential	
Time	Group4	InstantOC	.Grp1/IOC
		TimeDelayOC	Settings according to function block
		OverLoad	
	Save as Grp1	Stub	
	Save as Grp 2	PoleDiscord	.Grp1/TOC
	Save as Grp 3	BreakerFailure	Settings according to function block
	Save as Grp 4	EarthFault	
	Command with Confirmation according to the section *"Local human-machine interface"*	TimeDelayUV	
		TimeDelayOV	.Grp1/OVLD
		LossOfVoltage	Settings according to function block
		DeadLineDet	
		BrokenConduct	
		CTSupervision	.Grp1/STUB
		FuseFailure	Settings according to function block
		AutoRecloser	
		SynchroCheck	
		Trip	.Grp1/PD
		ComChantest	Settings according to function block
			.Grp1/BFP
			Settings according to function block

2.3.4 Functions, part IV

- REX 5XX/Set
  - DisturbReport
  - Functions
  - ChangeActGrp
  - Time
- .Set/Func
  - Group1
  - Group2
  - Group3
  - Group4
  - Save as Grp1
  - Save as Grp 2
  - Save as Grp 3
  - Save as Grp 4
  - Command with Confirmation according to the section *"Local human-machine interface"*
- .Func/Grp1
  - LineReference
  - Impedance
  - Differential
  - InstantOC
  - TimeDelayOC
  - OverLoad
  - Stub
  - PoleDiscord
  - BreakerFailure
  - EarthFault
  - TimeDelayUV
  - TimeDelayOV
  - LossOfVoltage
  - DeadLineDet
  - BrokenConduct
  - CTSupervision
  - FuseFailure
  - AutoRecloser
  - SynchroCheck
  - Trip
  - ComChantest
- .Grp1/EarthF
  - TimeDelayEF
  - 4StepEF
  - EFCom
  - ComIRevWei
- .EarthF/TEF
  - Settings according to function block
- .EarthF/EF4
  - General
  - Step1
  - Step2
  - Step3
  - Step4
  - Direction
  - 2ndHarmStab
  - SwitchOnToFlt
- .EarthF/EFC
  - Settings according to function block
- .EarthF/EFCA
  - Settings according to function block
- EF4/GEN
  - Settings according to function block
- EF4/Step1
  - Settings according to function block
- EF4/Step2
  - Settings according to function block
- EF4/Step3
  - Settings according to function block
- EF4/Step4
  - Settings according to function block
- EF4/Dir
  - Settings according to function block
- EF4/2ndHarm
  - Settings according to function block
- EF4/SOTF
  - Settings according to function block

2.3.5 Functions, part V

REX 5XX/Set	.Set/Func	.Func/Grp1	.Grp1/TUV
DisturbReport	Group1	LineReference	Settings according to function block
Functions	Group2	Impedance	
ChangeActGrp	Group3	Differential	
Time	Group4	InstantOC	.Grp1/TOV
		TimeDelayOC	Settings according to function block
		OverLoad	
	Save as Grp1	Stub	
	Save as Grp 2	PoleDiscord	.Grp1/LOV
	Save as Grp 3	BreakerFailure	Settings according to function block
	Save as Grp 4	EarthFault	
	Command with Confirmation according to the section *"Local human-machine interface"*	TimeDelayUV	
		TimeDelayOV	.Grp1/DLD
		LossOfVoltage	Settings according to function block
		DeadLineDet	
		BrokenConduct	
		CTSupervision	.Grp1/BRC
		FuseFailure	Settings according to function block
		AutoRecloser	
		SynchroCheck	
		Trip	.Grp1/CTSU
		ComChantest	Settings according to function block
			.Grp1/FUSE
			Settings according to function block

2.3.6 Functions, part VI

- REX 5XX/Set
  - DisturbReport
  - Functions
  - ChangeActGrp
  - Time
- .Set/Func
  - Group1
  - Group2
  - Group3
  - Group4
  - Save as Grp1
  - Save as Grp 2
  - Save as Grp 3
  - Save as Grp 4
  - Command with Confirmation according to the section *"Local human-machine interface"*
- .Func/Grp1
  - LineReference
  - Impedance
  - Differential
  - InstantOC
  - TimeDelayOC
  - OverLoad
  - Stub
  - PoleDiscord
  - BreakerFailure
  - EarthFault
  - TimeDelayUV
  - TimeDelayOV
  - LossOfVoltage
  - DeadLineDet
  - BrokenConduct
  - CTSupervision
  - FuseFailure
  - AutoRecloser
  - SynchroCheck
  - Trip
  - ComChantest
- .Grp1/AutoRec
  - AutoRecloser1
  - AutoRecloser2
  - AutoRecloser3
  - AutoRecloser4
  - AutoRecloser5
  - AutoRecloser6
- .Grp1/Sync
  - SynchroCheck1
  - SynchroCheck2
  - SynchroCheck3
  - SynchroCheck4
- .Grp1/TRIP
  - Operation
- .Grp1/CCHT
  - Settings according to function block
- .AutoRec/AR01[1]
  - Settings according to function block
- .Sync/SYN1[2]
  - Settings according to function block

1. User name.Default name is shown
2. Read only

2.3.7 Remaining menus

- REX 5XX/Set
  - DisturbReport
  - Functions
  - ChangeActGrp
  - Time
- .Set/GRP
  - Settings according to function block
- ChangeAct Grp, Command with confirmation according to the section *"Local human-machine interface"*
- .Set/TIME
  - Settings according to function block

2.4 Terminal report

.REX 5XX/TermRep
SelfSuperv
IdentityNo
Modules
AnalogInputs

.TermRep/SelfSup
InternFail
InternWarning
MPM-modFail
MPM-modWarning
ADC-module
Slot12-BIM1[1]
Slot14-IOM2[1]
Slot16-BOM3[1]
Slot18-MIM1[1]
Slot20-BIM5[1]
Slot22-IOM6[1]
RemTermCom
RealTimeClock
TimeSync

.TermRep/IdentNo
SerialNo
SW-Version

.TermRep/Modules
Slot12-BIM1[1]
Slot14-IOM2[1]
Slot16-BOM3[1]
Slot18-MIM1[1]
Slot20-BIM5[1]
Slot22-IOM6[1]
I/O-diff

.TermRep/AnInp
Ur
Ir
U1r
U2r
U3r
U4r
U5r
I1r
I2r
I3r
I4r
I5r

1. Follow the IdentNo installed on each pos. in the framework

2.5 Configuration

2.5.1 Part I

REX5XX	REX5XX/Config	.Config/AnInp	.AnInp/General	.Osc/BIM5
DisturbReport	AnalogInputs	General	fr	BIM5-OscBlock
ServiceReport	I/O-modules	U1	CTEarth	BIM5-OscRel
Settings	DiffFunction	U2		
TerminalReport	TerminalCom	U3	.AnInp/U1	
Configuration	Time	U4	Name	
Command	BuiltInMMI	U5	U1b	
Test	Identifiers	I1	U1Scale	
	SelectLanguage	I2		
		I3	.AnInp/I5	
		I4	Name	
		I5	I5b	
		U	I5Scale	
		I		
		P	.AnInp/U	
		Q	Name	
		f		
			.AnInp/I	
		.Config/I/O-mod	Name	
		Operation		
		Reconfigure	.AnInp/P	
		Oscillation	Name	
		.Config/DIFL	.AnInp/Q	
		DiffSync	Name	
			.AnInp/f	
			Name	
			.I/O-mod/Oper	
			Slot11-PSM1[2]	
			Slot15-IOM3[2]	
			Slot17-BOM4[2]	
			Slot19-BIM5[2]	

(2.5.1 Part I cont.)

Reconfigure, command with confirmation according to the section *"Local human-machine interface"*

.I/O-mod/Osc
Slot19-BIM5[2]

2. This is an example

2.5.2 Part II

REX5XX	REX5XX/Config	.Config/TermCom	.TermCom/SPA/IEC	.SPACom/Rear	.NodeInf/AdrInfo
DisturbReport	AnalogInputs	SPA/IECCom	X13Com	SlaveNo	DomainID
ServiceReport	I/O-modules	SPACom		BaudRate	SubnetID
Settings	DiffFunction	IECCom	.TermCom/SPACom	ActGrpRestrict	NodeID
TerminalReport	TerminalCom	LONCom	Rear	SettingRestrict	
Configuration	Time	RemTermCom	Front		.NodeInf/NeurID
Command	BuiltInMMI			.SPACom/Front	NeuronID
Test	Identifiers	.Config/Time	.TermCom/IECCom	SlaveNo	
	SelectLanguage	TimeSyncSourc	Commands	BaudRate	.NodeInf/Locat
			Measurands		Location
		.Config/MMI	FunctionType	.IECCom/Cmd	
		SettingRestrict	Communication	ARBlock	.Cmd/ARBlock
			BlockOfInfoCmd	ZCommBlock	Operation
		.Config/Ident		BlockFunctions	
		StationName	.TermCom/LONCom	LEDReset	.Cmd/ZComBlk
		StationNo	NodeInfo	SettingGrp1	Operation
		ObjectName	ServicePinMsg	SettingGrp2	
		ObjectNo	LONDefault	SettingGrp3	.Cmd/BlkFun
		UnitName	SessionTimers	SettingGrp4	Operation
		UnitNo			
			.TermCom/Comm	.IECCom/Meas	.Cmd/LEDRes
		.Config/SelLang	TerminalNo	MeasurandType	Operation
		ActiveLanguage	RemoteTermNo		
			BitRate	.IECCom/FunType	.Cmd/SetGrp1

(2.5.2 Part II, cont.)

Save Language, command with confirmation according to the section *"Local human-machine interface"*

OptoPower
CommSync

Operation
MainFuncType

Operation

.Cmd/SetGrp2

.IECCom/Com

Operation

SlaveNo
BaudRate

.Cmd/SetGrp3

Operation

BlockOfInfoCmd, command with status and confirmation according to the section *"Local human-machine interface"*

.Cmd/SetGrp4

Operation

.LONCom/NodeInf

AdressInfo
NeuronID
Location

.LONCom/SesTime

SessionTmo
RetryTmo
IdleAckCycle
BusyAckCycle
ErrNackCycle

ServicePinMsg, LONDefault, Command
with confirmation according to the section *"Local human-machine interface"*

2.6 Command

REX5XX	.REX5XX/Cmd	.Cmd/CD01
DisturbReport	CD01	CD01-CmdOut1[1]
ServiceReport	CD02	CD01-CmdOut2[1]
Settings	CD03	CD01-CmdOut3[1]
TerminalReport	CD04	CD01-CmdOut4[1]
Configuration	CD05	CD01-CmdOut5[1]
Command	CD06	CD01-CmdOut6[1]
Test	CD07	:
	:	:
	CD09	CD01-CmdOut14[1]
	CD10	CD01-CmdOut15[1]
	CD11	CD01-CmdOut16[1]

(CD02 to CD11 conforms with CD01, only present in REC 561)

CD01-CmdOut1 to CD01-CmdOut16, commands with status and confirmation according to the section *"Local human-machine interface"*

1. User name. Default name is shown

2.7 Test

REX5XX	.REX5XX/Test	.Test/Mode	.Mode/TestOp
DisturbReport	TestMode	Operation	Operation
ServiceReport	ConfigMode	BlocktFunctions	
Settings		BlockEventFunc	.Mode/BlkFnc
TerminalReport		DisturbReport	Signals according to function block
Configuration		Differential	
Command			
Test		.Test/CnfMode	.Mode/BlkEv
		ConfigMode	Signals according to function block
			.Mode/DistRep
			Operation
			DisturbSummary
			.Mode/Diff
			DiffTestMode
			ReleaseLocal