Contents Page

Hardware design 7–3
Introduction..... 7–3
Platform configurations..... 7–4
Full length platform..... 7–4
3/4 width platform..... 7–5
Half width platform 7–6
Configuration options..... 7–7
Construction and hardware characteristics 7–9
Modules..... 7–9
Transformer input Module (TRM)..... 7–9
A/D-conversion Module (ADM) 7–10
Main Processing Module (MPM)..... 7–11
Signal Processing Module (SPM) 7–12
Power Supply Module (PSM)..... 7–12
Input/Output modules..... 7–14
Binary In/Out Module (IOM)..... 7–15
Binary Input Module (BIM) 7–16
Binary Output Module (BOM)..... 7–17
Milliampere Input Module (MIM)..... 7–18
Human machine interface (HMI) 7–19
Serial communication module 7–21
Hardware description 7–21

1 Introduction

The terminal is assembled in a closed case that is 1/2, 3/4 or full width of a standard 19-inch wide rack. The height is 6U.

This terminal is made with a technology that fulfils all modern electro-magnetic interference requirements. These requirements are fulfilled by having a closed and partly welded steel case around the printed circuit board assemblies. The terminal has very good separation between the internal, sensitive signals, and the external, polluted process signals. This is achieved by keeping all process signals in the back of the case and the internal signals in a mother-board where all sensitive bus communication runs.The mother-board is located behind the front panel of the terminal.

All external serial buses for Substation Control System (SCS), Station Monitoring System (SMS) and the front-connected PC are insulated with fibre optical links to avoid disturbances. This, in combination with a good design of transformers, power supply and binary inputs give a terminal, that can withstand the electromagnetic interference tests.

The product is based on harmonized standards. The standards are listed in flap 3 Product introductions, sections Requirements and technical data.

If a COMBITEST test switch is included an additional box type RHGS is used. It has the same principal design as the terminal case and the width 1/4 of 19-inch. It is possible to mount the RHGS-box by the side of a REx 5xx product of size 3/4x19 inch or smaller.

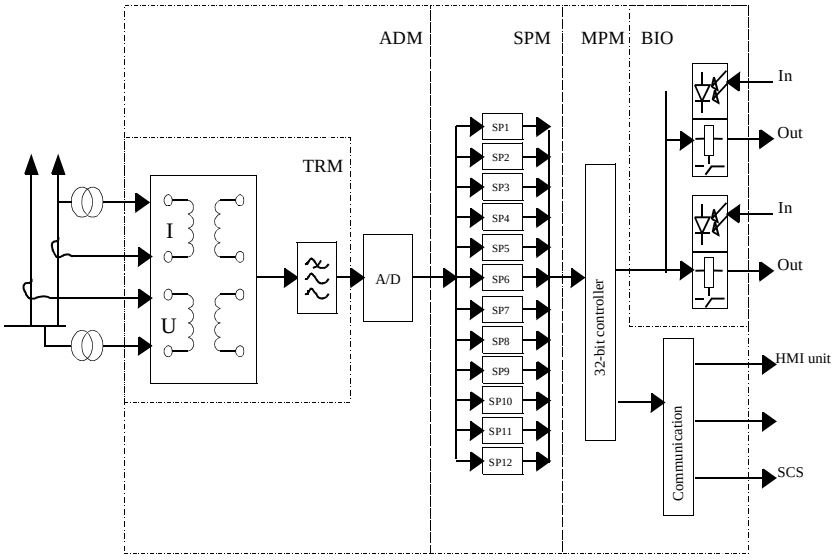

Figure 1: Basic block diagram

2 Platform configurations

The basic configuration of the REx 5xx terminal consists of the following modules:

- Main processing module. All information is processed or passed through this module before it is sent from the terminal. The module is used for configuration of the terminal and storage of all its settings. It is also used for communication (position S10 in the full sized rack else S9).
- Signal processing module with up to 12 digital signal processors used for all measuring functions.
- Human machine interface (HMI) built-in to the front cover and contains LEDs, a LCD and an optical connector for a front-connected PC. For this front communication, you need an optional special cable, with an opto-to-RS232, built-in converter.
- A Power supply containing a DC/DC converter, which provides full isolation between the terminal and the external battery system. The power supply consists of a two stage converter which gives a very wide input-voltage range, from 48 V up to 250 V. It delivers +5, +12 and -12 Volts. There are two different types depending on the platform size, see below.

2.1 Full length platform

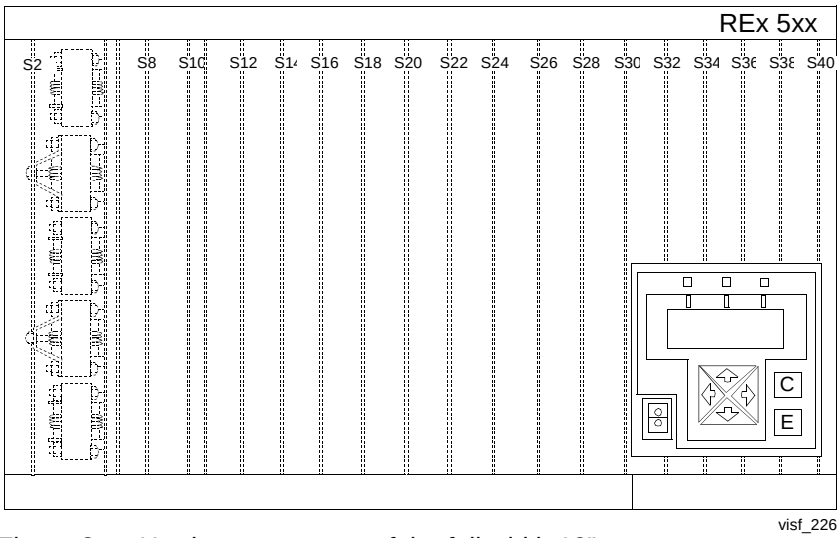

Figure 2: Hardware structure of the full width 19” case

The basic addition to the configuration of the terminal for the full width 19” case consists of the following modules:

- A power supply that can provide 30W (position S40)
- Full width 19” backplane with 13 slots available for I/O.

2.2 3/4 width platform

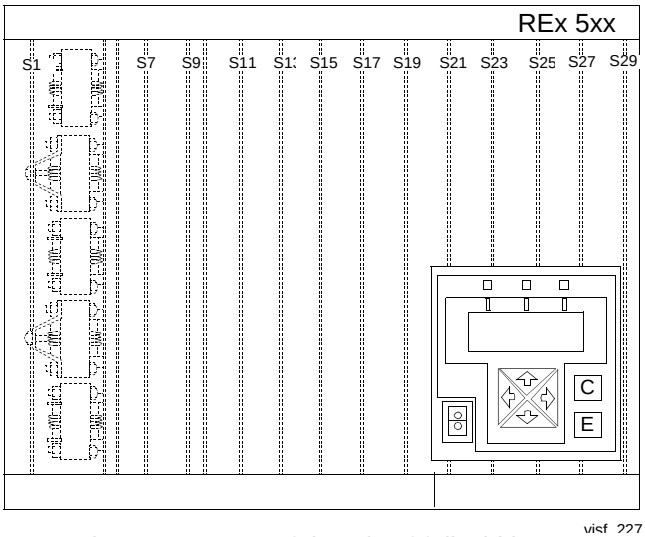

Figure 3: Hardware structure of the 3/4 of full width case

The basic addition to the configuration of the terminal for the 3/4 of full width case consists of the following modules:

- A power supply that can provide 20W and contains both an external CAN-port and I/O (position S13).
- A 3/4 of full width backplane with 8 slots available for I/O.

2.3 Half width platform

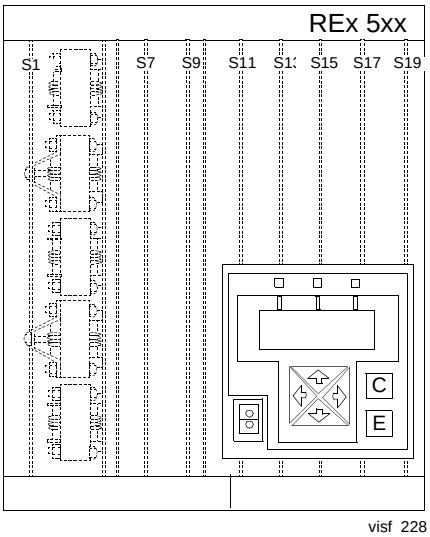

Figure 4: Hardware structure of the 1/2 of full width case

The basic addition to the configuration of the terminal for the 1/2 of full width case consists of the following modules:

- A power supply that can provide 20W and contains both an external CAN-port and I/O (position S13).
- A 1/2 of full width backplane with 3 slots available for I/O.

2.3.1 Configuration options

Optionally these hardware modules are available:

- Binary input/output modules, that can be of type Binary input module (16 inputs), Binary output module (24 relays or 12 command relays), and a combined Binary input/output module (8 inputs and 12 output relays).
- A Milliampere Input Module.
- One or two optical serial communication modules, intended for remote fibre optic communication. Having two modules will enable the terminal to be a part of SMS in parallel with a Substation Automation System (SA). These are mounted on the Main Processing Module if used.
- RTXP 24 test switch.
- Differential communication modules. A galvanic module with five different configurations, an optical module or a carrier module with a slot for either a galvanic or an optical module. (at position S38 on the full width case, S19 on the half of full width case and S29 on the 3/4 of full width case).
- A Transformer module with five voltage and five current input transformers (at position S2 on the full width case else S1).
- An A/D-conversion (AD) module for up to 10 analogue inputs, operating with a sampling frequency of 2000 Hz. It has a bandwidth of 250 Hz, and a dynamic range for currents, from 0,01 to 100 · I_r, and for voltages, from 0,01 to 2 · U_r (at position S8 on the full width case else S7).

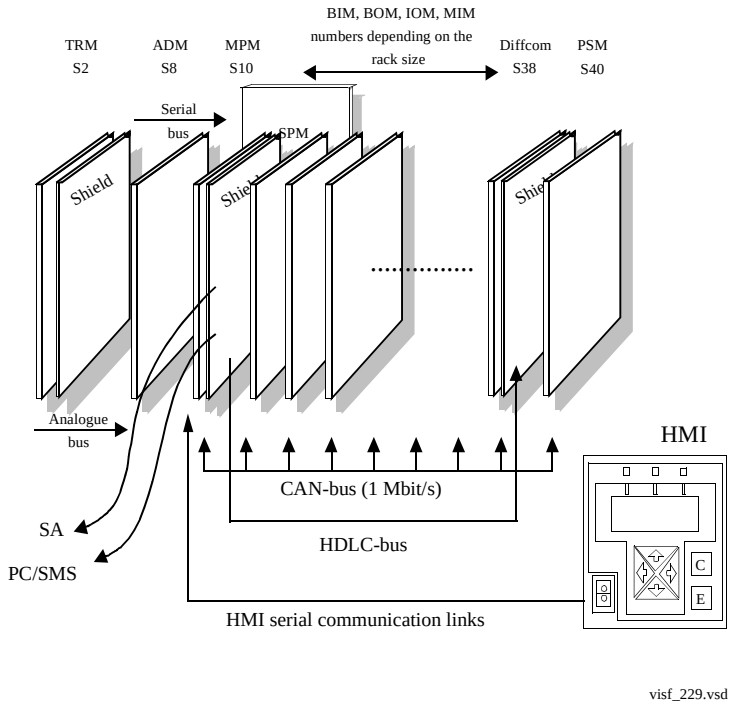

Figure 5: Internal hardware structure showing a full width case configuration

1 Modules

1.1 Transformer input Module (TRM)

Current and voltage input transformers form an isolating barrier between the external wiring and internal circuits of the terminal. They adapt the values of the measuring quantities to the static circuitry and prevent the disturbances to enter the terminalYou can connect 10 analogue input quantities to the transformer module that consists of:

- Five voltage transformers that cover a rated range from 100 to 125 V or 220 V.
- Five current transformers in two versions - one for 1 A and one for 5 A rated current.

The TRM module also exists in a variant with only five current transformers.

The input quantities are the following:

- Three phase currents
- Residual current of the protected line
- Residual current of the parallel circuit (if any) for compensation of the effect of the zero sequence mutual impedance on the fault locator measurement or residual current of the protected line but from a parallell core used for CT circuit supervision function or independent earthfault function.
- Three phase voltages
- Open delta voltage for the protected line (for an optional directional earth-fault protection)
- Phase voltage for an optional synchronism and energizing check.

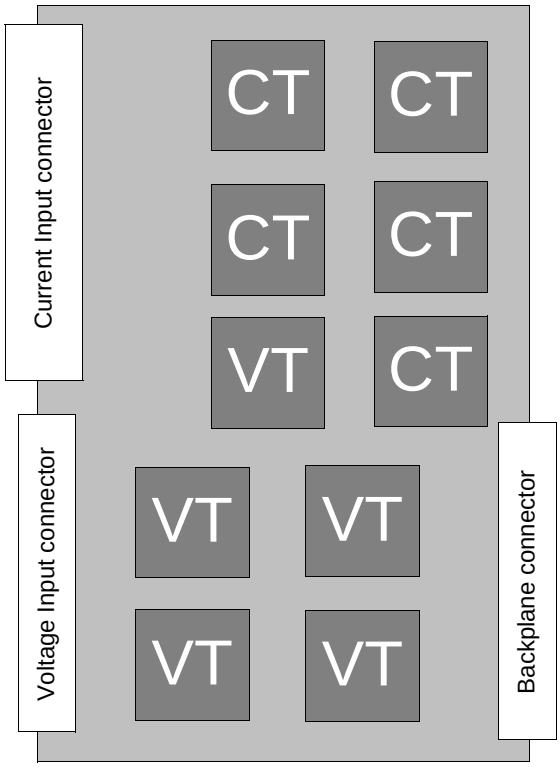

Figure 1: Block diagram of the TRM

1.2 A/D-conversion Module (ADM)

The incoming signals from the intermediate current transformers are adapted to the electronic voltage level with shunts. To gain dynamic range for the current inputs, two shunts with separate A/D channels are used for each input current. By that a 16-bit dynamic range is obtained with a 12 bits A/D converter.

The next step in the signal flow is the analogue filter of the first order, with a cut-off frequency of 500 Hz. This filter is used to avoid aliasing problems.

The A/D converter has a 12-bit resolution. It samples each input signal (5 voltages and 2 · 5 currents) with a sampling frequency of 2 kHz.

Before the A/D-converted signals are transmitted to the main processing module, the signals are band-pass filtered and down-sampled to 1 kHz in a digital signal processor (DSP).

The filter in the DSP is a numerical filter with a cut-off frequency of 250 Hz.

The transmission of data between the A/D-conversion module and the Main processing module is done on a supervised serial link of RS485 type. This transmission is performed once every millisecond and contains information about all incoming analogue signals.

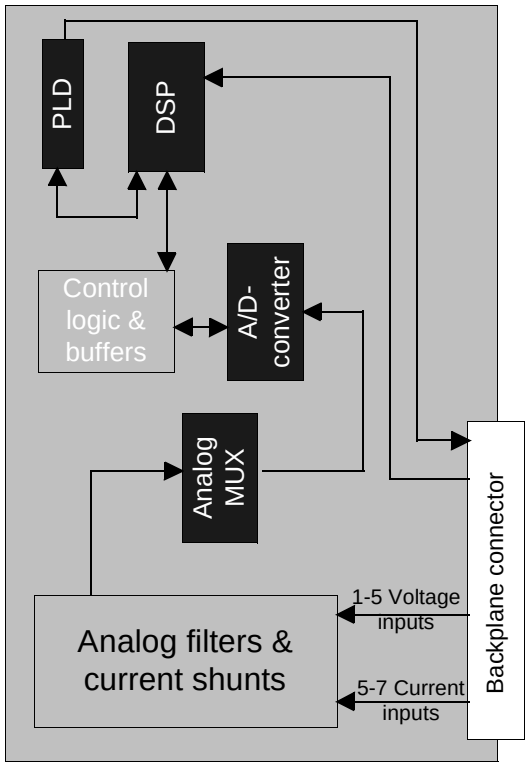

Figure 2: Block diagram for the ADM

1.3 Main Processing Module (MPM)

The terminal is based on a pipelined multi-processor design. The 32-bit main controller, receives the result from the Signal processing module every millisecond.

All memory management are also handled by the main controller. The module has 8MB of disc memory and 1MB of code memory. It also has 8MB of dynamic memory.

The controller also serves four serial links: one high-speed CAN bus for Input/Output modules and three serial links for the different types of HMI communication explained below.

The main controller makes all decisions, based on the information from the Signal processing module and from the binary inputs. The decisions are sent to the different output modules and to these communication ports:

- Local HMI module including a front-connected PC, if any, for local human-machine communication
- LON communication port at the rear (option)
- SPA/IEC communication port at the rear (option)

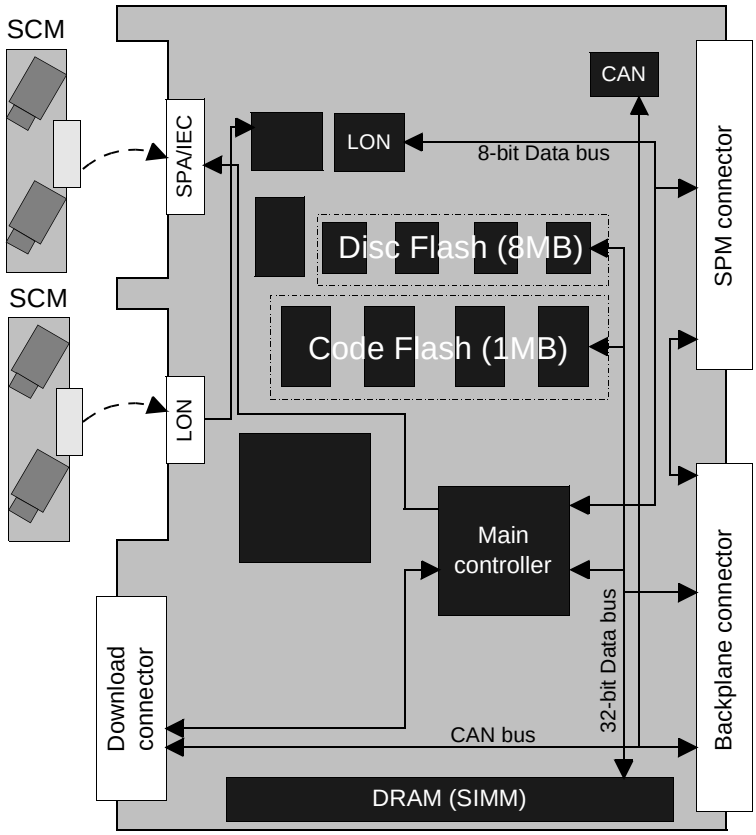

Figure 3: Block diagram for the MPM

To allow easy upgrading of software in the field, FUT, a special connector is used, the Download connector. The RTC on the module has been adjusted for year 2000.

1.4 Signal Processing Module (SPM)

All analogue data are received in all of the up to 12 (16 bits) digital signal processors (DSP). In these DSPs, the main part of the filtering and the calculations occur. The result from the calculations in the DSPs is sent every millisecond on a parallel bus to the (32 bit) main controller on the Main processing module.

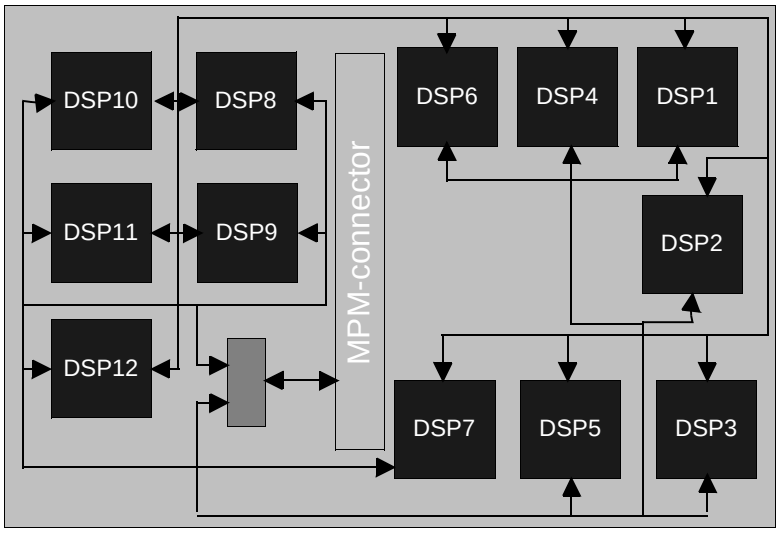

Figure 4: Block diagram of the SPM

1.5 Power Supply Module (PSM)

There are two different types of power supply modules. The Power supplies contains a built-in, self-regulated DC/DC converter that provides full isolation between the terminal and the external battery system. The wide-input voltage range of the DC/DC converter converts an input voltage range from 48 to 250V, including a ±20% tolerance on the EL voltage. The output voltages are +5, +12 and -12 Volt.

The first type of PSM, used in the half and 3/4 of full width platforms, has an external CAN-port used for the connection of two platforms and built-in I/O with four optical isolated inputs and five outputs. It can provide up to 20W.

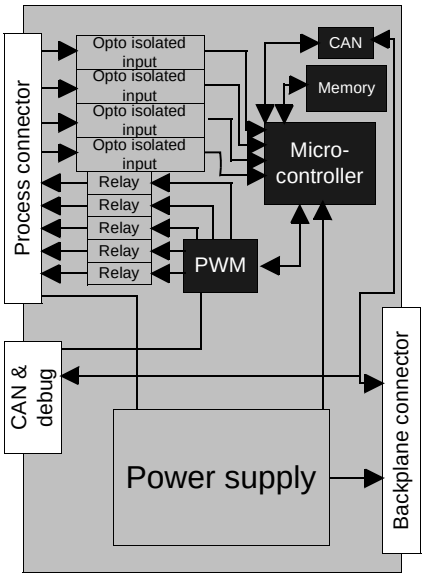

Figure 5: Block diagram for the PSM used in the half and 3/4 of full width cases.

The second type of PSM has no CAN or I/O but it can provide 30W for the extended number of modules in the full width platform.

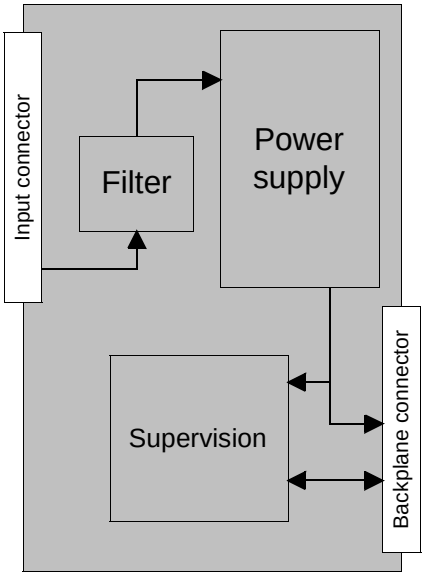

Figure 6: Block diagram for the PSM used in the full width case.

1.6 Input/Output modules

The number of inputs or outputs in REx 5xx can be selected in a variety of combinations depending on the size of the rack. There are no basic I/O configuration of the terminal. The table below shows the number of available inputs or output modules for the different platform sizes.

Platform size	1/1 of full width	3/4 of full width	1/2 of full width
I/O slots available	13	8	3

Note! Standard factory configuration for REx 5xx terminals requires minimum one binary input/output module.

A number of signals are available for signalling purposes in the terminal, and all are freely programmable. The voltage level of the input/output modules is selectable at order RL48, 110, or 220 (48/60 V ±20%, 110/125 V ±20% or 220/250 V ±20%). The Binary in/out module and the Binary input module are also available in an RL 24 version (24/30 V ±20%).

For more information about IOM, BIM and BOM see figure 7, which shows the operating characteristics of the binary inputs of the three voltage levels.

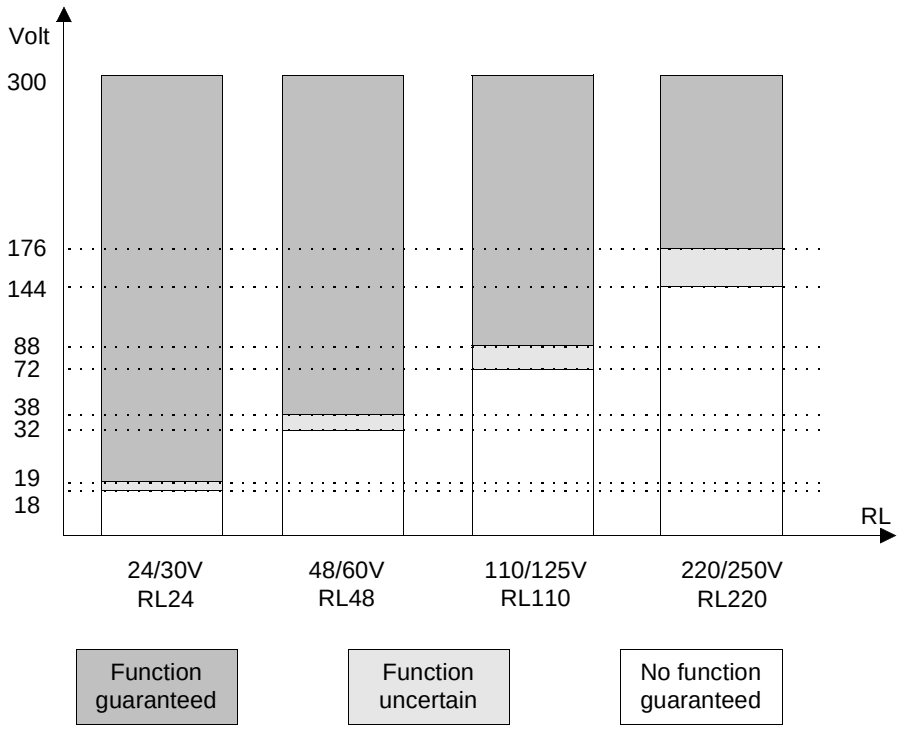

Figure 7: Voltage dependence for the binary inputs

These modules communicates with the Main Processing Module via the CAN-bus on the backplane.

The design of all binary inputs enables the burn off of the oxide of the relay contact connected to the input, despite the low, steady-state power consumption, which is shown in figure 8.

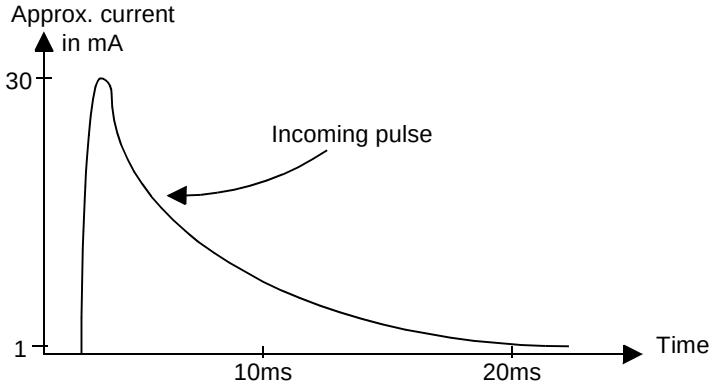

Figure 8: Current through the relay contact

1.6.1 Binary In/Out Module (IOM)

The Binary in/out module contains eight optical isolated binary inputs and twelve binary output contacts. Ten of the output relays have contacts with a high-switching capacity (Trip and signal relays). The remaining two relays are of reed type and for signalling purpose only. The relays are grouped together as can be seen in the terminal diagram.

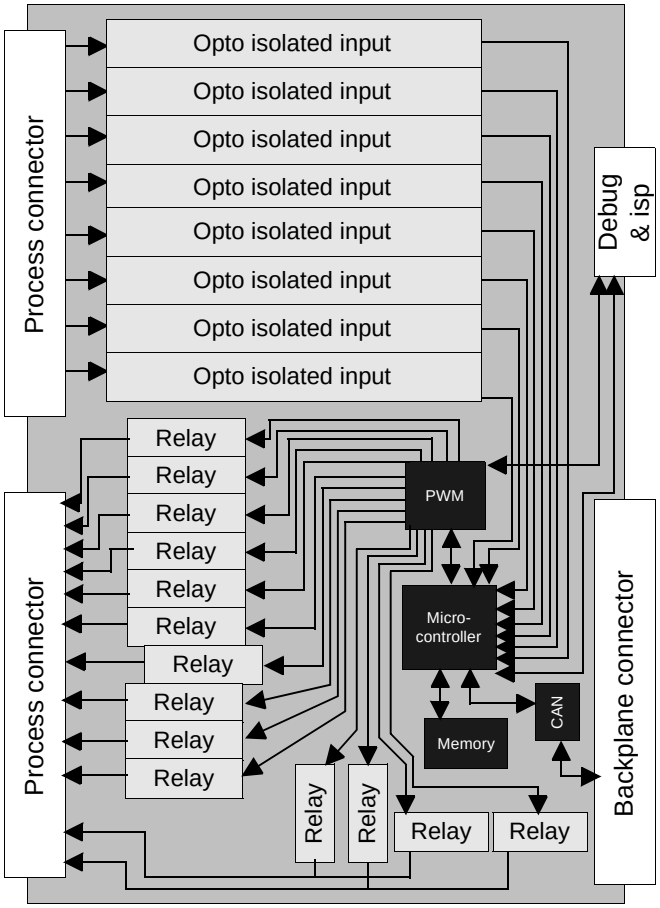

Figure 9: Block diagram for the binary input/output module

1.6.2 Binary Input Module (BIM)

The Binary input module contains 16 optical isolated binary inputs. The binary inputs are freely programmable and can be used for the input logical signals to any of the functions. They can also be included in the disturbance recording and event-recording functions. This enables the extensive monitoring and evaluation of operation for the terminal and for all associated electrical circuits. You can select the voltage level of the Binary input modules (RL24, 48, 110, or 220) at order.

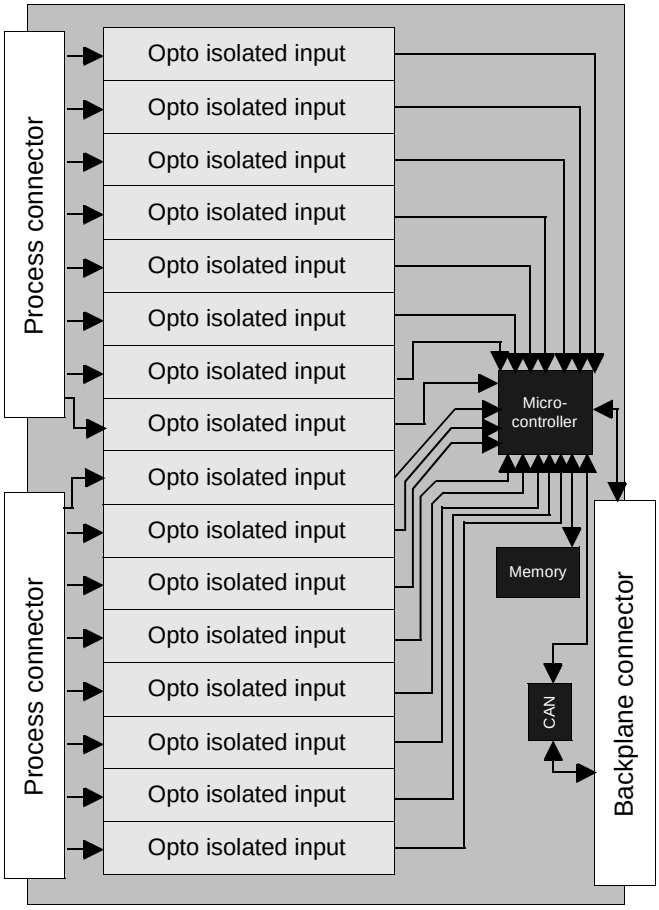

Figure 10: Block diagram of the Binary Input Module

1.6.3 Binary Output Module (BOM)

The Binary output module has either 24 single-output relays or 12 command-output relays. They are grouped together as can be seen in the block diagram below. All the output relays have contacts with a high switching capacity (Trip and signal relays).

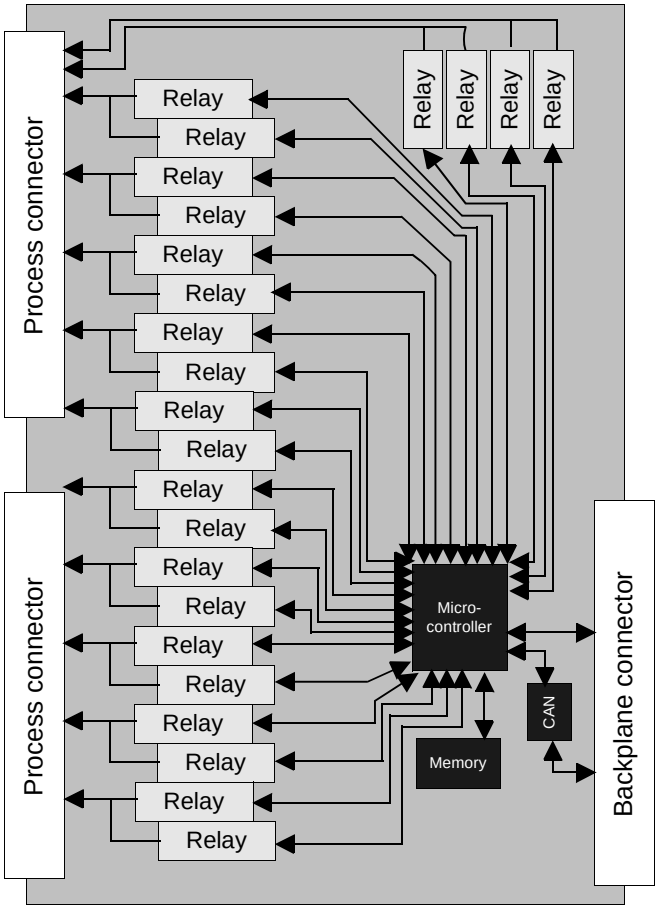

Figure 11: Block diagram of the Binary Output Module

Two single output relays can be connected in series (which gives a command output relay) in order to get a high security at operation of high voltage apparatuses.

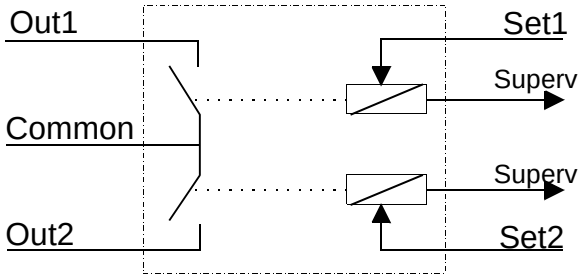

Figure 12: One of twelve binary output groups

The output relays are provided with a supervision function to ensure a high degree of security against unwanted operation. The status of the output contacts (on/off) is continously read back and compared with the expected status. If any discrepancy occurs, an error is reported. This function covers:

- interrupt or short circuit in an output relay coil
- failure of an output relay driver.

1.7 Milliampere Input Module (MIM)

The Milliampere Input Module has six independent analogue channels with separated protection, filtering, reference, A/D-conversion and optical isolation for each input making them galvanic isolated from each other and from the rest of the module.

The differential analogue inputs measure DC and low frequency currents in range of up to +/- 20mA. The A/D converter has a digital filter with selectable filter frequency. All inputs are calibrated separately and stored in a non-volatile memory and the module will self-calibrate if the temperature should start to drift. This module communicates, like the other I/O-modules, with the Main Processing Module via the CAN-bus.

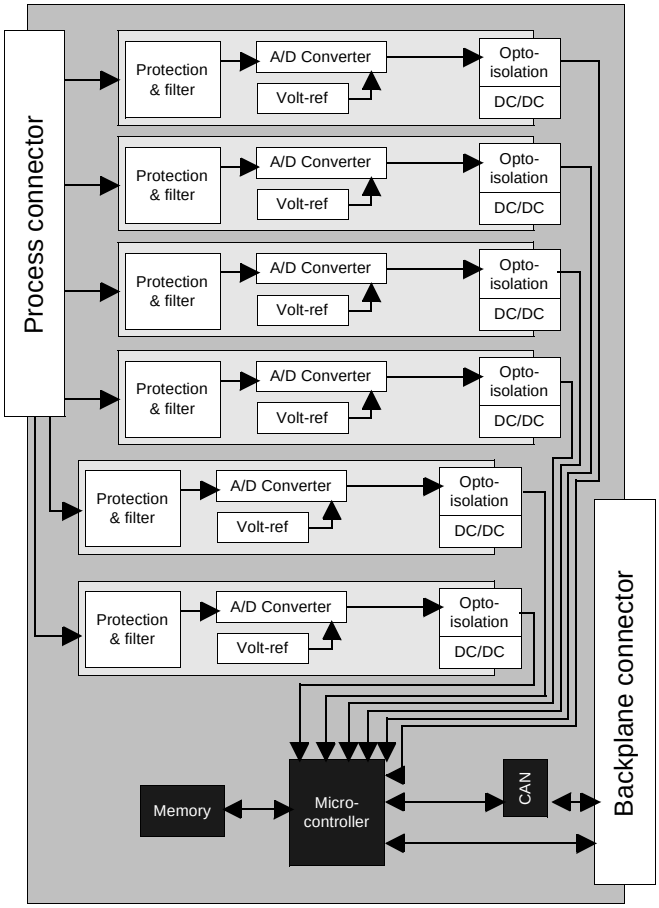

Figure 13: Block diagram of the Milliampere Input Module

1.8 Human machine interface (HMI)

The local HMI module consists of three LEDs (red, yellow, and green), an LCD display with four lines, each contain 16 characters, six buttons and an optical connector for PC communication.

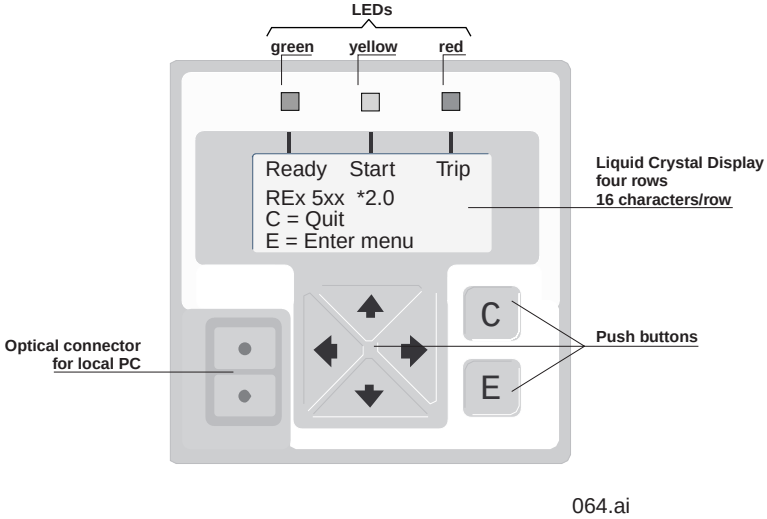

Figure 14: Local HMI

The PC is connected via a special cable, that has a built-in optical to electrical interface. Thus, disturbance-free local serial communication with the personal computer is achieved. You need the SMS-BASE and SM software for this communication. A PC greatly simplifies the communication with the terminal. It also gives the user additional functionality which is unavailable on the HMI because of insufficient space. The LEDs on the HMI display this information:

Table 1: The local HMI LED display

LED indication	Information
Green:	
Steady	In service
Flashing	Internal failure
Dark	No power supply
Yellow:	
Steady	Disturbance Report triggered
Flashing	Terminal in test mode
Red:	
Steady	Trip command issued from a protection function
Flashing	Terminal in blocked or configuration mode

1 Hardware description

The serial communication modules are placed in slots at the rear part of the Main processing module. One or two modules can be applied on the Main processing module (see “Construction and hardware characteristic”, section “Main processing module”). One slot is intended for LON communication and the other for SPA or IEC communication. The two serial communication modules enable the terminal to be a part of a Substation Automation system (LON or SPA), and/or a Station Monitoring System (SPA).

There are four different types of SCMs:

Table 1: SCM types

Communication:	Fibre connection:	Label	Connection
LON	ST, plastic, snap-in	1MRK00168-EA	X15
LON	FC, glass, bayonet	1MRK00168-DA	X15
SPA/IEC	ST, plastic, snap-in	1MRK00168-FA	X13
SPA/IEC	FC,glass, bayonet	1MRK00168-DA	X13

The serial communication module can have connectors for two plastic fibre cables or two glass fibre cables. The incoming optical fibre is connected to the RX receiver input, and the outgoing optical fibre to the TX transmitter output. When the fibre optic cables are laid out, pay special attention to the instructions concerning the handling, connection, etc. of the optical fibres. The modules can be identified with a number on the label on the module.