Contents Page

Terminal identification.....5–3
Application..... 5–3
Parameters..... 5–3
Setting 5–4
Reports..... 5–4
Appendix 5–5
Setting tables 5–5
Activation of setting groups 5–7
Application..... 5–7
Design 5–7
Configuration and operation 5–7
Testing..... 5–8
Appendix 5–9
Function block 5–9
Signal list..... 5–9
Restricted settings via human-machine interface 5–11
Application..... 5–11
Installation and setting instructions 5–12
Testing..... 5–13
Appendix 5–14
Function block 5–14
Signal list..... 5–14
Setting table 5–14
I/O system configuration.....5–15
Application..... 5–15
Design 5–16
General 5–16
Binary input module 5–16
Binary output module 5–17
Input/output module 5–18
mA input module 5–18
Power supply module..... 5–19
Differential communication module 5–20
I/O position 5–20
Configuration 5–21
Setting 5–22
Testing..... 5–23
Appendix 5–24
Signal list..... 5–24
Setting table 5–24
Configurable logic 5–25
Application..... 5–25

Design 5–26
Additional configurable logic 5–26
Inverter (INV) 5–26
OR 5–27
AND 5–27
Timer 5–28
Pulse 5–30
Exclusive OR (XOR) 5–31
Set-Reset (SR) 5–32
MOVE 5–32
Setting 5–35
Reports 5–36
Configuration 5–37
Testing 5–38
Appendix 5–39
Function blocks 5–39
Signal lists 5–42
Setting tables 5–44
Self-supervision 5–45
Application 5–45
Design 5–45
Blocking of functions during test 5–49
Application 5–49
Design 5–49
Time synchronisation 5–51
Application 5–51
Theory of operation 5–52
Setting 5–53
Appendix 5–54
Function block 5–54
Signal list 5–54
Setting table 5–54

1 Application

Serial number, software version and the identification names and numbers for the station, the object and the terminal (unit) itself can be stored in the REx 5xx terminal. Also the serial numbers of included modules are stored in the terminal. This information can be read on the local HMI or when communicating with the terminal through a PC or with SMS/SCS.

The base currents, voltages and rated frequency must be set since the values affect many functions. The input transformers ratio must be set as well. The ratio for the current and the voltage transformer automatically affects the measuring functions in the terminal.

The internal clock is used for time tagging of:

- Internal events.
- Disturbance reports.
- Events in a disturbance report.
- Events transmitted to the SCS substation control system.

This implies that the internal clock is very important. The clock can be synchronised (see *Time synchronisation*) to achieve higher accuracy of the time tagging. Without synchronisation, the internal clock is useful for comparisons among events within the REx 5xx terminal.

2 Parameters

Uxr and Ixr (x = 1-5) are the rated voltage and current values for the analogue input transformers within the REx 5xx terminal. UxScale and IxScale are the actual ratio for the main transformer at the protected object. These values will be used to calculate the present voltage and current in the protected object. Uxb and Ixb defines base voltage and current values, used to define the per-unit system used in the terminal for calculation of setting values.

The current transformer secondary current (Is_{SEC}) is:

$$Is_{SEC} = \frac{I_{SEC}}{I_{PRIM}} \cdot Is \qquad \text{(Equation 1)}$$

where I_{SEC} is the secondary rated current of the main CT and I_{PRIM} is the primary rated current of the main CT. The relay setting value IP>> is given in percentage of the secondary base current value, Ixb, associated to the current transformer input Ix:

$$IP{>>} = \frac{Is_{SEC}}{Ixb} \cdot 100 \qquad \text{(Equation 2)}$$

The value of Ixb can be calculated as:

$$Ixb = \frac{\text{Rated primary current}}{\text{CT ratio}} \qquad \text{(Equation 3)}$$

Name is possible to set for respective analogue input, to easily identify and refer the values within the disturbance report to the corresponding object.

3 Setting

The identification settings (station, object and terminal names and numbers) are done and displayed at:

Configuration
Identifiers

The analogue input settings Uxb, Ixb, UxScale, IxScale, names, f and CTEarth are done at:

Configuration
AnalogInputs

The Uxr and Ixr are configured at delivery and can only be reconfigured through the CAP 531 configuration tool.

The settings of the internal clock is done at:

Settings
Time

4 Reports

The serial number of the terminal and the software version can be displayed at:

TerminalReport
IdentityNo

The serial number of included modules in the terminal can be displayed at:

TerminalReport
Modules

The Uxr and Ixr configurations can be displayed at:

TerminalReport
AnalogInputs

The present primary and secondary voltage and current phasors can be viewed at:

ServiceReport
Phasors
Primary or **Secondary** respectively

UxScale, IxScale and the identifiers are displayed at the same place as where they were set.

The present internal time is read at:

ServiceReport
Time

5 Appendix

5.1 Setting tables

Table 1: Identifiers

Parameter	Range	Unit	Default	Parameter description
Unit No	0 - 99999	Int	0	State an identity number for the terminal
Unit Name	0 - 16	char	Unit Name	State an identity name for the terminal, 16 characters
Object No	0 - 99999	Int	0	State an identity number for the protected object
Object Name	0 - 16	char	Object Name	State an identity name for the protected object, 16 characters
Station No	0 - 99999	Int	0	State an identity number for the station
Station Name	0 - 16	char	Station Name	State an identity name for the station, 16 characters

Table 2: AnalogInputs - General

Parameter	Range	Unit	Default	Parameter description
CTEarth	0 - 1	Int	1	Direction of CT earthing, 0 = In = towards the bus, 1 = Out = towards the line
fr	0 - 1	Int	0	Select system frequency: 0 = 50 Hz, 1 = 60 Hz

Table 3: AnalogInputs - Voltage

Parameter	Range	Unit	Default	Parameter description
U1r	10.000 - 500.	V	63.509	Rated voltage of transformer on input U1
U1b	30.000 - 500.	V	63.509	Base voltage of input U1
U1Scale	1.000 - 20000.000		2000.000	Scale for nominal primary voltage, input U1
Name	0 - 13	char	U1	State an user-defined name of input U1, 13 characters
U2r	10.000 - 500.	V	63.509	Rated voltage of transformer on input U2
U2b	30.000 - 500.	V	63.509	Base voltage of input U2
U2Scale	1.000 - 20000.000		2000.000	Scale for nominal primary voltage, input U2
Name	0 - 13	char	U2	State an user-defined name of input U2, 13 characters
U3r	10.000 - 500.	V	63.509	Rated voltage of transformer on input U3
U3b	30.000 - 500.	V	63.509	Base voltage of input U3
U3Scale	1.000 - 20000.000		2000.000	Scale for nominal primary voltage, input U3
Name	0 - 13	char	U3	State an user-defined name of input U3, 13 characters
U4r	10.000 - 500.	V	63.509	Rated voltage of transformer on input U4
U4b	30.000 - 500.	V	63.509	Base voltage of input U4

Parameter	Range	Unit	Default	Parameter description
U4Scale	1.000 - 20000.000		2000.000	Scale for nominal primary voltage, input U4
Name	0 - 13	char	U4	State an user-defined name of input U4, 13 characters
U5r	10.000 - 500.	V	63.509	Rated voltage of transformer on input U5
U5b	30.000 - 500.	V	63.509	Base voltage of input U5
U5Scale	1.000 - 20000.000		2000.000	Scale for nominal primary voltage, input U5
Name	0 - 13	char	U5	State an user-defined name of input U5, 13 characters

Table 4: AnalogInputs - Current

Parameter	Range	Unit	Default	Parameter description
I1r	0.1000 - 10.	A	1.0000	Rated current of transformer on input I1
I1b	0.1 - 10.0	A	1.0	Base current of input I1
I1Scale	1.000 - 40000.000		2000.000	Scale for nominal primary current, input I1
Name	0 - 13	char	I1	State an user-defined name of input I1, 13 characters
I2r	0.1000 - 10.	A	1.0000	Rated current of transformer on input I2
I2b	0.1 - 10.0	A	1.0	Base current of input I2
I2Scale	1.000 - 40000.000		2000.000	Scale for nominal primary current, input I2
Name	0 - 13	char	I2	State an user-defined name of input I2, 13 characters
I3r	0.1000 - 10.	A	1.0000	Rated current of transformer on input I3
I3b	0.1 - 10.0	A	1.0	Base current of input I3
I3Scale	1.000 - 40000.000		2000.000	Scale for nominal primary current, input I3
Name	0 - 13	char	I3	State an user-defined name of input I3, 13 characters
I4r	0.1000 - 10.	A	1.0000	Rated current of transformer on input I4
I4b	0.1 - 10.0	A	1.0	Base current of input I4
I4Scale	1.000 - 40000.000		2000.000	Scale for nominal primary current, input I4
Name	0 - 13	char	I4	State an user-defined name of input I4, 13 characters
I5r	0.1000 - 10.	A	1.0000	Rated current of transformer on input I5
I5b	0.1 - 10.0	A	1.0	Base current of input I5
I5Scale	1.000 - 40000.000		2000.000	Scale for nominal primary current, input I5
Name	0 - 13	char	I5	State an user-defined name of input I5, 13 characters

1 Application

Different conditions in networks of different voltage levels require high adaptability of the used protection and control units to best provide for dependability, security and selectivity requirements. Protection units operate with higher degree of availability, especially, if the setting values of their parameters are continuously optimised regarding the conditions in power system.

The operational departments can plan different operating conditions for the primary equipment. The protection engineer can prepare in advance for the necessary optimised and pre-tested settings for different protection functions. Four different groups of setting parameters are available in the REx 5xx terminals. Any of them can be activated automatically through up to four different programmable binary inputs by means of external control signals.

2 Design

The REx 5xx control and protection terminals have four independent groups (sets) of setting parameters. These groups can be activated at any time in five different ways:

- Locally by means of the local human-machine interface (HMI).
- Locally by means of a front-connected personal computer (PC).
- Remotely through the Station Monitoring System (SMS).
- Remotely through the Station Control System (SCS).
- Locally by means of up to four, programmable binary inputs.

In the document "*Local human-machine interface*", the procedure of how to change the active setting group from the local HMI is described. Operating procedures for the PC aided methods of changing the active setting groups are described in the corresponding SMS documents and instructions for the operators within the SCS are included in the SCS documentation. This document deals with the option to change the active setting group by means of the control signals connected to the programmable binary inputs of the terminal.

3 Configuration and operation

This function has four included input signals, as shown in Figure 1:. Each is configurable to any of the binary inputs in the terminal. Configuration must be performed under the menu:

Configuration
Functions
ActiveGroup
FuncInputs

The submenu Functions is only accessible for service personnel, so the configuration must be done by an authorised service person.

The number of the signals configured must correspond to the number of the setting groups to be controlled by the external signals (contacts).

The voltage need not be permanently present on one binary input. Any pulse, which must be longer than 200 ms, activates the corresponding setting group. The group remains active until some other command, issued either through one of the binary inputs or by other means (local HMI, SMS, SCS), activates another group.

One or more inputs can be activated at the same time. If a function is represented in two different groups and both the groups are active, the group with lowest identity has priority. This means that group 2 has higher priority than group 4 etc.

It is possible to change active group from the local HMI at:

Settings
ChangeActGrp

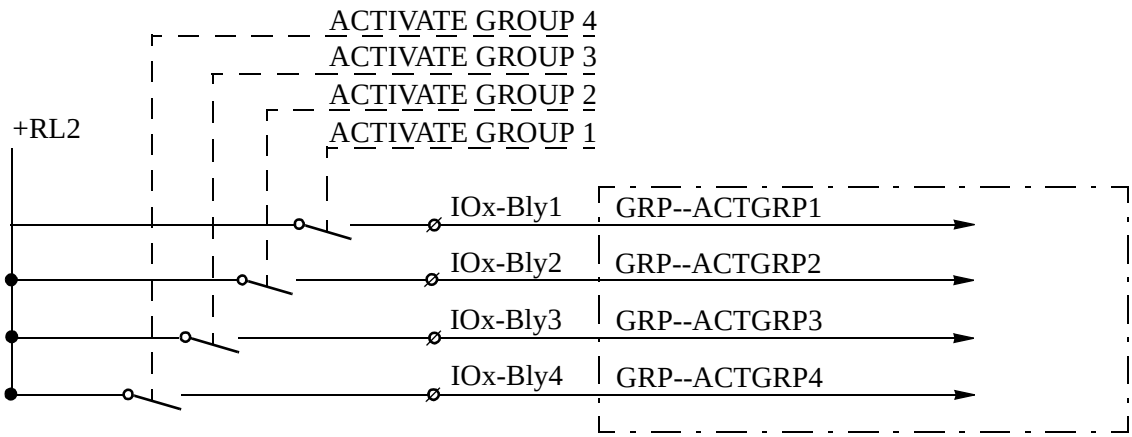

Figure 1: Connection of the function to external circuits.

This function includes four output signals as well, for confirmation of which group that is active.

4 Testing

Configure the GRP--ACTGRPn input signals to the corresponding binary inputs of a terminal and browse the local HMI for the information about the active setting group under the menu:

ServiceReport
ActiveGroup

Connect the appropriate dc voltage to the corresponding binary input of the terminal and observe the information presented on the HMI display. The displayed information must always correspond to the activated input. Check that corresponding output indicates the active group.

5 Appendix

5.1 Function block

```
ACTIVATE SETTING GROUP GRP--

ACTGRP1                    GRP1
ACTGRP2                    GRP2
ACTGRP3                    GRP3
ACTGRP4                    GRP4
```

5.2 Signal list

Table 1:

Block	Signal	Type	Description
GRP--	ACTGRP1	IN	Active Group-Select setting group 1 as active group
GRP--	ACTGRP2	IN	Active Group-Select setting group 2 as active group
GRP--	ACTGRP3	IN	Active Group-Select setting group 3 as active group
GRP--	ACTGRP4	IN	Active Group-Select setting group 4 as active group
GRP--	GRP1	OUT	Setting group 1 active
GRP--	GRP2	OUT	Setting group 2 active
GRP--	GRP3	OUT	Setting group 3 active
GRP--	GRP4	OUT	Setting group 4 active

Note! Do not set this function in operation before carefully reading these instructions and configuring the HMI--BLOCKSET functional input to the selected binary input.

The HMI--BLOCKSET functional input is configurable only to one of the available binary inputs of a REx 5xx terminal. For this reason, the terminal is delivered with the default configuration, where the HMI--BLOCKSET signal is connected to NONE-NOSIGNAL.

1 Application

Setting values of different control and protection parameters and the configuration of different function and logic circuits within the terminal are important not only for reliable and secure operation of the terminal, but also for the entire power system.

Non-permitted and non-coordinated changes, done by unauthorised personnel, can cause severe damages in primary and secondary power circuits. They can influence the security of people working in close vicinity of the primary and secondary apparatuses and those using electric energy in everyday life.

For this reason, all REx 5xx terminals include a special feature that, when activated, blocks the possibility to change the settings and/or configuration of the terminal from the HMI module.

All other functions of the local human-machine communication remain intact. This means that an operator can read all disturbance reports and other information and setting values for different protection parameters and the configuration of different logic circuits.

This function permits remote resetting and reconfiguration through the serial communication ports, when the setting restrictions permit remote changes of settings. The setting restrictions can be set only on the local HMI.

2 Installation and setting instructions

Figure 1: presents the combined connection and logic diagram for the function.

Configuration of the HMI--BLOCKSET functional input signal under the submenu is possible only to one of the built-in binary inputs:

Configuration
BuiltInHMI

Carefully select a binary input not used by or reserved for any other functions or logic circuits, before activating the function.

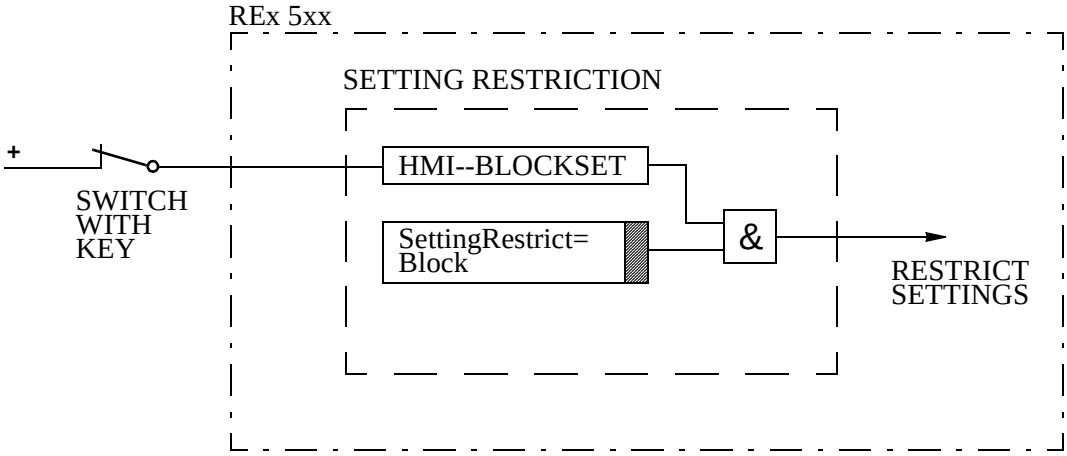

Figure 1: Connection and logic diagram for the BLOCKSET function.

Set the setting restriction under the submenu:

Configuration
BuiltInHMI
SettingRestrict

to SettingRestrict = Block:

The selected binary input must be connected to the control DC voltage via a normally closed contact of a control switch, which can be locked by a key. Only when the normally closed contact is open, the setting and configuration of the REx 5xx terminal via the HMI is possible.

3 Testing

1.1 Configure the HMI--BLOCKSET functional input to the binary input, which is determined by the engineering or the input that is not used by any other function.

1.2 Set the setting restriction to SettingRestrict = Block.

1.3 Connect the rated control DC voltage to the selected binary input.

1.4 Try to change the setting of any parameter for one of the functions. Reading of the values must be possible. The terminal must not respond to any attempt to change the setting value or configuration.

1.5 Disconnect the control DC voltage from the selected binary input.

1.6 Repeat the attempt under item 1.4. The terminal must accept the changed setting value or configuration.

1.7 Depending on the requested design for a complete REx 5xx terminal, leave the function active or reconfigure the function into the default configuration and set the setting restriction function out of operation to SettingRestrict = Open.

4 Appendix

4.1 Function block

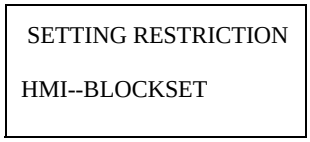

4.2 Signal list

Table 1:

Block	Signal	Type	Description
HMI-	BLOCKSET	Inter-nal	Input signal to restrict the setting and configuration options by the HMI unit. **Warning:** Read the instructions before use. Default configuration to NONE-NOSIGNAL.

4.3 Setting table

Table 2:

Parameter	Range	Unit	Default	Parameter description
SettingRe-strict	Open, Block			*Open:* Permits changes of settings and configuration by means of the HMI unit regardless of the status of input HMI--BLOCKSET. *Block:* Inhibits changes of settings and configuration via the HMI unit when the HMI--BLOCKSET input signal is equal to logic one.

1 Application

This document describes the I/O system configuration that is used to add, remove or move I/O modules in the REx 5xx terminal products. To configure means to connect the function blocks that represent each I/O module (BIM, BOM, IOM, DCM, MIM and PSM) to a function block for the I/O positions (IOP1).

Available I/O modules are:

- BIM, ***B***inary ***I***nput ***M***odule with 16 binary input channels.
- BOM, ***B***inary ***O***utput ***M***odule with 24 binary output channels.
- IOM, ***I***nput/***O***utput ***M***odule with 8 binary input and 12 binary output channels.
- MIM, ***m***A ***I***nput ***M***odule with six analogue input channels.
- PSM, Input Output ***P***ower ***S***upply ***M***odule with four inputs and four outputs.
- DCM, ***D***ifferential ***C***ommunication ***M***odule. The only software configuration for this module is the I/O Position input. Refer to the "*Remote end data communication module"* hardware design for further description.

A REx 5xx terminal houses different numbers of modules depending of the casing size and which kind of modules chosen.

- The 1/1 of 19-inch size casing houses a maximum of 13 modules. But when Input/Output- or Output modules are included, the maximum of modules are four. The maximum number of mA Input modules are limited to six.
- The 3/4 size casing houses a maximum of eight modules. Also for this casing, the limitation is four modules when Input/Output- or Output modules are included. The maximum number of mA Input modules are three.
- The 1/2 size casing houses a maximum of three binary modules or one analogue mA Input module.

It is possible to fit modules of different types in any combination in a terminal, but the total maximum numbers of modules must be considered.

2 Design

2.1 General

Each I/O-module can be placed in any CAN-I/O slot in the casing. Anyway, there is one exception. The DCM-module has a fixed slot position which depends of the size of the casing.

To add, remove or move modules in the terminal, the reconfiguration of the terminal must be done from the graphical configuration tool CAP 531.

Users refer to the CAN-I/O slots by the physical slot numbers of the CAN-I/O slots, which also appear in the terminal drawings.

If the user-entered configuration does not match the actual configuration in the terminal, an error output is activated on the function block, which can be treated as an event or alarm.

The BIM, BOM, IOM, DCM and PSM share the same communication addresses for parameters and configuration. So they must share I/O module 1-13 (IOxx), which are the same function block. A user-configurable function selector per I/O module function block determines which type of module it is.

All names for inputs and outputs are inputs on the function blocks and must be set from the graphical tool CAP 531.

2.2 Binary input module

The binary input module (BIM) has 16 inputs. These inputs appear as outputs on the IOxx function block. The BIM supervises oscillating input signals.

IOxx-

I/O-module	
POSITION	ERROR
BINAME01	BI1
BINAME02	BI2
BINAME03	BI3
BINAME04	BI4
BINAME05	BI5
BINAME06	BI6
BINAME07	BI7
BINAME08	BI8
BINAME09	BI9
BINAME10	BI10
BINAME11	BI11
BINAME12	BI12
BINAME13	BI13
BINAME14	BI14
BINAME15	BI15
BINAME16	BI16
	BLKOUT

Figure 1: Function block for the binary input module (BIM).

2.3 Binary output module

The binary output module (BOM) has 24 outputs. The outputs are used in pairs when used as command outputs. Refer to the "*Apparatus Control*" document, which describes the application of using these outputs. These outputs appear as inputs on the IOxx function block.

IOxx-

I/O-module	
POSITION	ERROR
BO1	BLKOUT
BO2	
BO3	
BO4	
BO5	
BO6	
BO7	
BO8	
BO9	
BO10	
BO11	
BO12	
BO13	
BO14	
BO15	
BO16	
BO17	
BO18	
BO19	
BO20	
BO21	
BO22	
BO23	
BO24	
BONAME01	
BONAME02	
BONAME03	
BONAME04	
BONAME05	
BONAME06	
BONAME07	
BONAME08	
BONAME09	
BONAME10	
BONAME11	
BONAME12	
BONAME13	
BONAME14	
BONAME15	
BONAME16	
BONAME17	
BONAME18	
BONAME19	
BONAME20	
BONAME21	
BONAME22	
BONAME23	
BONAME24	

Figure 2: Function block for the binary output module (BOM).

2.4 Input/output module

The input/output module (IOM) has 8 inputs and 12 outputs. The functionality of the oscillating input blocking, available on BIM and on the supervised outputs on BOM, are not available on this module.

IOxx-

I/O-module	
POSITION	ERROR
BO1	BI1
BO2	BI2
BO3	BI3
BO4	BI4
BO5	BI5
BO6	BI6
BO7	BI7
BO8	BI8
BO9	
BO10	BLKOUT
BO11	
BO12	
BONAME01	
BONAME02	
BONAME03	
BONAME04	
BONAME05	
BONAME06	
BONAME07	
BONAME08	
BONAME09	
BONAME10	
BONAME11	
BONAME12	
BINAME01	
BINAME02	
BINAME03	
BINAME04	
BINAME05	
BINAME06	
BINAME07	
BINAME08	

Figure 3: Function block for the input/output module (IOM).

2.5 mA input module

The mA input module (MIM) has six inputs for mA signals. The POSITION input is located on the first MIM channel for each MIM module. If the configuration is incorrect:

- the ERROR output is set on the first MIM channel (MI11, MI21-MI61) of that MIM.
- the InputErr is set on the outputs on all MIM channels of that MIM.

For more information about the mA input module including the signal list and setting table, refer to the document "*Direct Current Measuring Unit*".

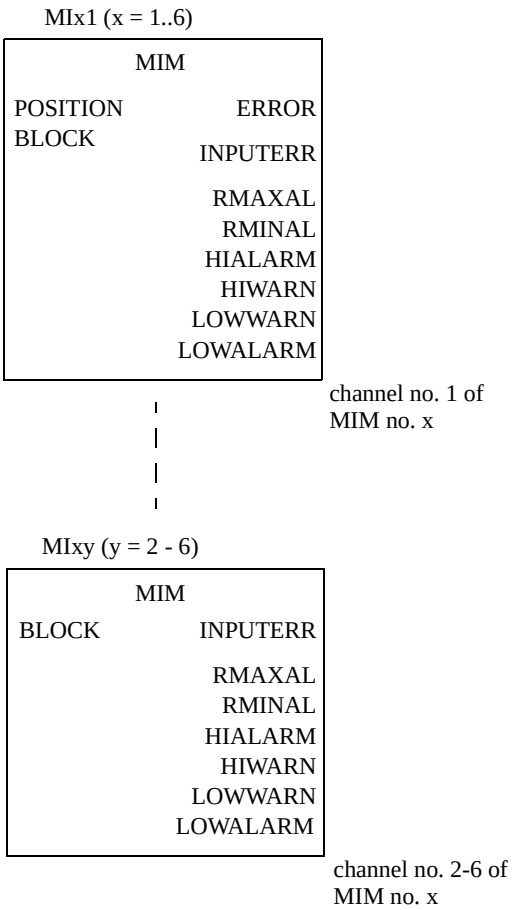

Figure 4: Function blocks for the mA input module (MIM).

2.6 Power supply module

The power supply module (PSM) has 4 inputs and 4 outputs, to be used for I/O operations just as BIM and BOM inputs and outputs.

Note: These I/O signals are only present in half and 3/4 width units.

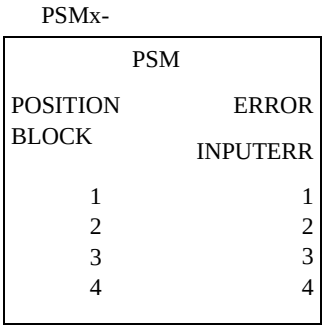

Figure 5: Function block for the power supply module (PSM).

2.7 Differential communication module

As already mentioned, the DCM-module only has the I/O-position input to configure (to the I/O Position block). Anyhow, the module has a fixed slot position which depends of the size of the casing (slot S38 in the full width case, S19 in the half of full width case and S29 in the 3/4 of full width case).

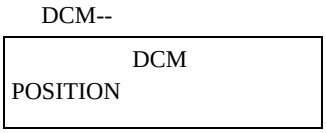

Figure 6: Function block for the differential comm. module (DCM).

2.8 I/O position

The IOP1 (I/O position) function block is the same for the different casings, independent of the number of slots available. Anyway, it looks different depending of actual configuration. All necessary configuration is done in the CAP 531 configuration tool.

The Sxx outputs (xx = 11, 12..28, 30, 32, 34, 36) are connected to the POSITION inputs of the I/O Modules and MIMs.

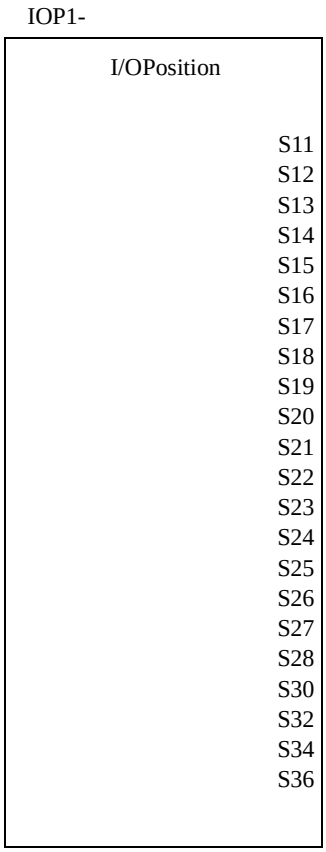

Figure 7: Function block of the I/O position block (IOP1-).

3 Configuration

The configuration can only be performed from CAP 531, the graphical configuration tool.

To configure from the graphical tool:

- First, set the function selector for the logical I/O module to the type of I/O module that is used, BIM, BOM, IOM, DCM, MIM or PSM.
- Secondly, connect the POSITION input of the logical I/O module to a slot output of the IOP function block.

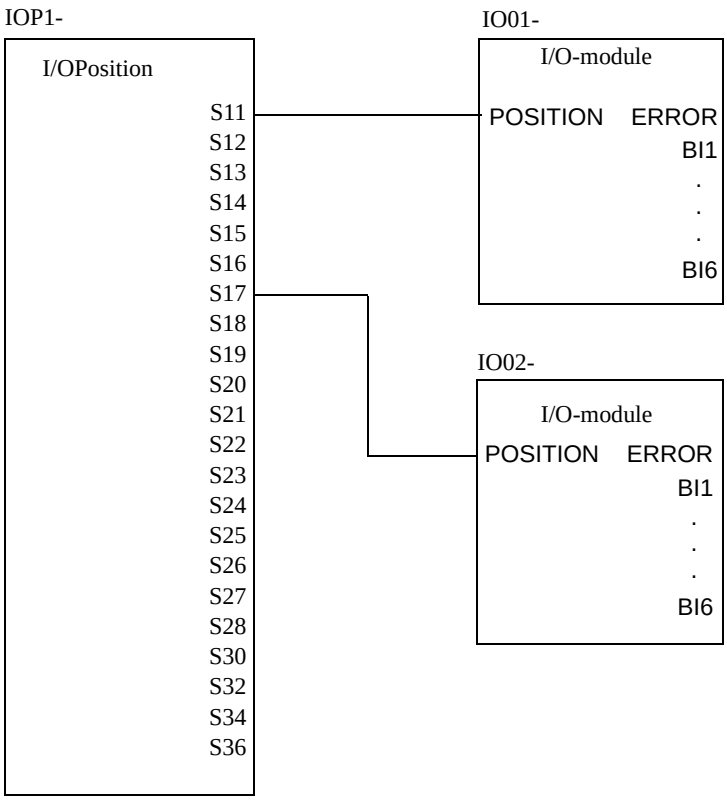

Figure 8: Example of an I/O-configuration in the graphical tool CAP 531 for a REx 5xx with two BIMs.

4 Setting

The user shall set the input names for binary input and binary output modules (BIM, BOM, IOM and PSM) from the CAP 531 configuration tool.

The binary input module (BIM) has a suppression function which blocks oscillating inputs on the module. It is possible to set the oscillation blocking/release frequencies from both the SMS or from the local HMI.

The appendix contains the parameters and their setting ranges for BIM, BOM, IOM and PSM.

Refer to the document "*Direct Current Measuring Unit*" to set the mA input module.

5 Testing

Not configured I/O modules are not supervised. When an I/O module is configured as a logical I/O module (BIM, BOM, IOM, DCM, MIM or PSM), the logical I/O modules are supervised. See “*Self-supervision*”.

Each logical I/O module has an error flag that is set if anything is wrong with any signal or the whole module. The error flag is also set when there is no physical I/O module of the correct type present in the connected slot.

The user can find status for inputs and outputs as well as self-supervision status from the local HMI in menus:

TerminalReport
- **SelfSuperv**
  - **..., Slotxx-BIMyy=, ...**
    - **OK/FAILED**

ServiceReport
- **I/O**
  - **Slotxx-BIMyy**
    - **FuncOutputs**

6 Appendix

6.1 Signal list

Block	Signal	Type	Description
IOxx-(xx=01-13)	BLKOUT	IN	Block outputs
IOxx-	POSITION	IN	Position of I/O module
IOxx-	BIy	IN	Binary input y (y=1-24). Valid for IOM and BOM modules
IOxx-	BOy	OUT	Binary output y (y=1-24). Valid for IOM and BOM modules
IOxx-	ERROR	OUT	I/O module status. Activated if the I/O module has failed
IOxx-	BINAMEnn (nn=01-24)		See settings table
IOxx-	BONAMEnn (nn=01-24)		See settings table

6.2 Setting table

Parameter	Range	Unit	Default	Parameter description
BINAMEnn (nn=01-24)	User def. string	String	IOxx-BIn (n=1-24)	User defined name for binary input of function block IOxx (xx=01-13). String length up to 13 characters,all characters available on the HMI can be used
BONAMEnn (nn=01-24)	User def. string	String	IOxx-BOn (n=1-24)	User defined name for binary output of function block IOxx (xx=01-13). String length up to 13 characters,all characters available on the HMI can be used
OscBlock	1-40	Hz	40	Oscillation blocking frequency for I/O module. Common for all channels of a BIM module
OscRel	1-40	Hz	30	Oscillation release frequency for I/O module. Common for all channels of a BIM module

1 Application

Different protection, control, and monitoring functions within the REx 5xx terminals are quite independent as far as their configuration in the terminal is concerned. The user cannot enter and change the basic algorithms for different functions, because they are located in the digital signal processors and extensively type tested. The user can configure different functions in the terminals to suit special requirements for different applications.

For this purpose, additional logic circuits are needed to configure the terminals to meet user needs and also to build in some special logic circuits, which use different logic gates and timers.

2 Design

The number of blocks of configurable logic circuits available in basic REx 5xx:

6 ms cyclicity:

- 30 AND gates
- 60 OR gates
- 20 INV (INVerters)
- 10 timers (for On or Off delay)
- 10 pulses

200 ms cyclicity:

- 10 timers (for On or Off delay) with extended maximum time delay
- 10 pulses with extended maximum pulse length
- 5 SR (Set-Reset)
- 39 XOR (eXclusive OR)

2.1 Additional configurable logic

The number of blocks of configurable logic circuits available as additional logic (option):

6 ms cyclicity:

- 40 pulses

200 ms cyclicity:

- 239 AND gates
- 159 OR gates
- 59 INV (INVerters)
- 6 MOVE (3 MOF and 3 MOL)

2.2 Inverter (INV)

The INV function block is used for inverting boolean variables. The function block (Figure 1:) has one input, designated IVnn-INPUT, where nn presents the serial number of the block. Each INV circuit has one output, IVnn-OUT.

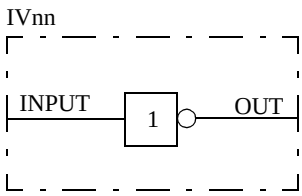

Figure 1: Function block diagram of the inverter (INV) function

The output signal from the INV function block is set to 1 if the input signal is 0 and is set to 0 when the input signal is 1. See truth table below.

Table 1: Truth table for the INV function block

INPUT	OUT
1	0
0	1

2.3 OR

OR function blocks are used to form general combinatory expressions with boolean variables. The function block (Figure 2:) has six inputs, designated Onnn-INPUTm, where nnn presents the serial number of the block, and m presents the serial number of the inputs in the block. Each OR circuit has two outputs, Onnn-OUT and Onnn-NOUT (inverted).

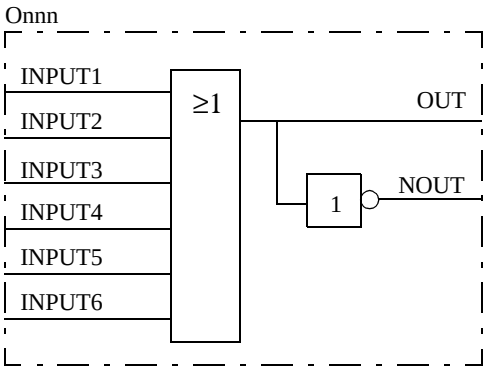

Figure 2: Function block diagram of the OR function

The output signal (OUT) is set to 1 if any of the inputs (INPUT1-6) is 1. See truth table below.

Table 2: Truth table for the OR function block

INPUT1	INPUT2	INPUT3	INPUT4	INPUT5	INPUT6	OUT	NOUT
0	0	0	0	0	0	0	1
0	0	0	0	0	1	1	0
0	0	0	0	1	0	1	0
. . .	. . .	. . .	. . .	. . .	. . .	1	0
1	1	1	1	1	0	1	0
1	1	1	1	1	1	1	0

2.4 AND

AND function blocks are used to form general combinatory expressions with boolean variables. The function block (Figure 3:) has four inputs (one of them inverted), designated Annn-INPUTm (Annn-INPUT4N is

inverted), where nnn presents the serial number of the block, and m presents the serial number of the inputs in the block. Each AND circuit has two outputs, Annn-OUT and Annn-NOUT (inverted).

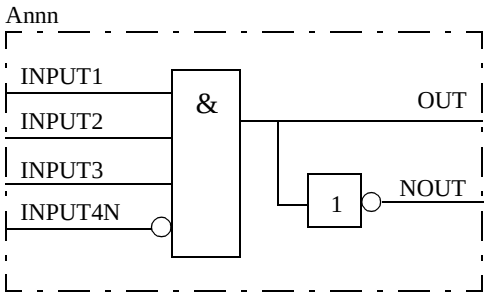

Figure 3: Function block diagram of the AND function

The output signal (OUT) is set to 1 if the inputs INPUT1-3 are 1 and INPUT4N is 0. See truth table below.

Table 3: Truth table for the AND function block

INPUT1	INPUT2	INPUT3	INPUT4N	OUT	NOUT
0	0	0	1	0	1
0	0	1	1	0	1
0	1	0	1	0	1
0	1	1	1	0	1
1	0	0	1	0	1
1	0	1	1	0	1
1	1	0	1	0	1
1	1	1	1	0	1
0	0	0	0	0	1
0	0	1	0	0	1
0	1	0	0	0	1
0	1	1	0	0	1
1	0	0	0	0	1
1	0	1	0	0	1
1	1	0	0	0	1
1	1	1	0	1	0

2.5 Timer

The function block TM timer has outputs for delayed input signal at drop-out and at pick-up. The timer (Figure 4:) has a settable time delay TMnn-T between 0.00 and 60.00 s in steps of 0.01 s. The input signal for each time delay block has the designation TMnn-INPUT, where nn presents the serial number of the logic block. The output signals of each time delay

block are TMnn-ON and TMnn-OFF. The first one belongs to the timer delayed on pick-up and the second one to the timer delayed on drop-out. Both timers within one block always have the same setting.

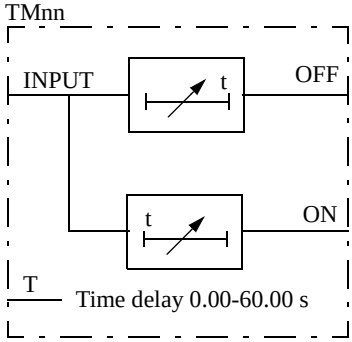

Figure 4: Function block diagram of the Timer function

The function block TL timer (Figure 5:) with extended maximum time delay at pick-up and at drop-out, is identical with the TM timer. The difference is the longer time delay TLnn-T, settable between 0.0 and 90000.0 s in steps of 0.1 s.

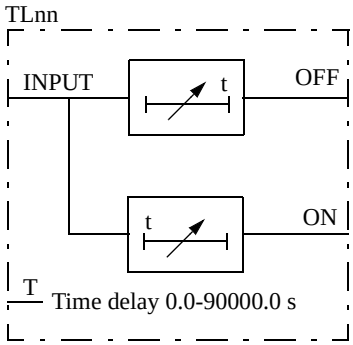

Figure 5: Function block diagram of the TimerLong function

The input variable to INPUT is obtained delayed a settable time T at output OFF when the input variable changes from 1 to 0 in accordance with the time pulse diagram, Figure 6:. The output OFF signal is set to 1 immediately when the input variable changes from 0 to 1.

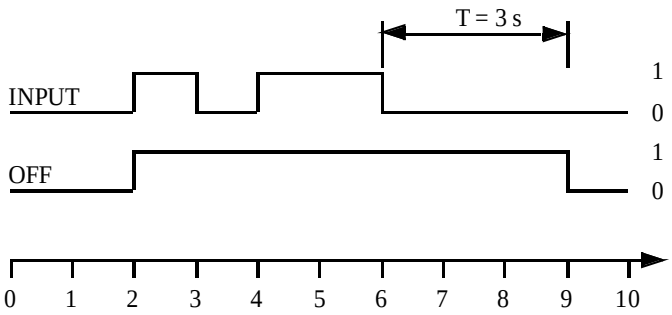

Figure 6: Example of time diagram for a timer delayed on drop-out with preset time T = 3 s

The input variable to INPUT is obtained delayed a settable time T at output ON when the input variable changes from 0 to 1 in accordance with the time pulse diagram, Figure 7:. The output ON signal returns immediately when the input variable changes from 1 to 0.

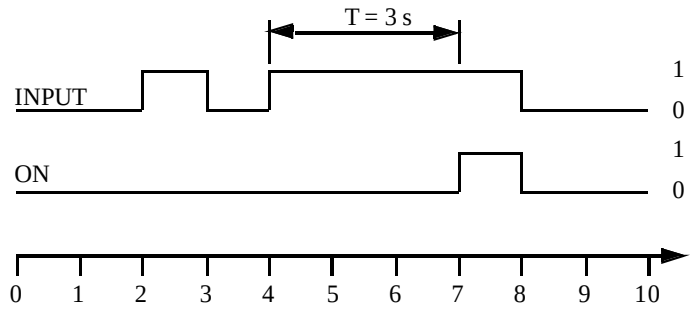

Figure 7: Example of time diagram for a timer delayed on pick-up with preset time T = 3 s

If more timers than available in the terminal are needed, it is possible to use pulse timers with AND or OR logics. Figure 8: shows an application example of how to realise a timer delayed on pick-up. Figure 9: shows the realisation of a timer delayed on drop-out. Note that the resolution of the setting time must be 0.2 s, if the connected logic has a cycle time of 200 ms.

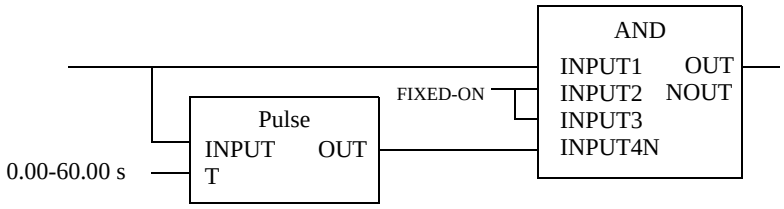

Figure 8: Realisation example of a timer delayed on pick-up

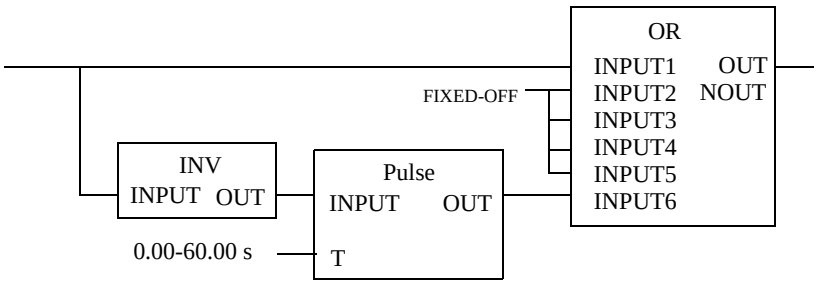

Figure 9: Realisation example of a timer delayed on drop-out

2.6 Pulse

The pulse function can be used, for example, for pulse extensions or limiting of operation of outputs. The pulse timer TP (Figure 10:) has a settable length of a pulse between 0.00 s and 60.00 s in steps of 0.01 s. The input signal for each pulse timer has the designation TPnn-INPUT, where nn

presents the serial number of the logic block. Each pulse timer has one output, designated by TPnn-OUT. The pulse timer is not retriggable, that is, it can be restarted first after that the time T has elapsed.

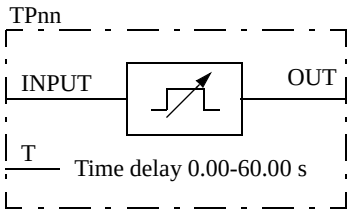

Figure 10: Function block diagram of the Pulse function

The function block TQ pulse timer (Figure 11:) with extended maximum pulse length, is identical with the TP pulse timer. The difference is the longer pulse length TQnn-T, settable between 0.0 and 90000.0 s in steps of 0.1 s.

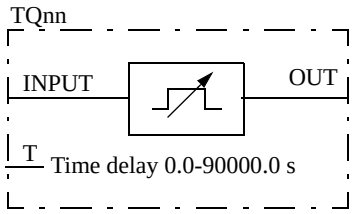

Figure 11: Function block diagram of the PulseLong function, TQ

A memory is set when the input INPUT is set to 1. The output OUT then goes to 1. When the time set T has elapsed, the memory is cleared and the output OUT goes to 0. If a new pulse is obtained at the input INPUT before the time set T has elapsed, it does not affect the timer. Only when the time set has elapsed and the output OUT is set to 0, the pulse function can be restarted by the input INPUT going from 0 to 1. See time pulse diagram, Figure 12:.

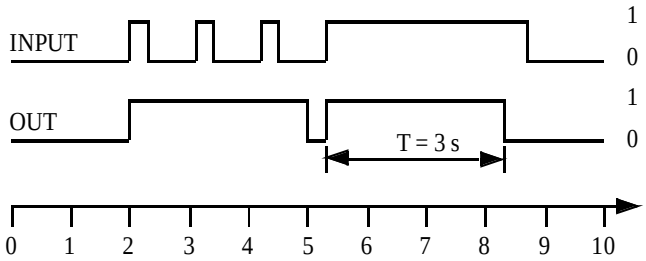

Figure 12: Example of time diagram for the pulse function with preset pulse length T = 3 s

2.7 Exclusive OR (XOR)

The function block exclusive OR (XOR) is used to generate combinatory expressions with boolean variables. XOR (Figure 13:) has two inputs, designated XOnn-INPUTm, where nn presents the serial number of the block, and m presents the serial number of the inputs in the block. Each

XOR circuit has two outputs, XOnn-OUT and XOnn-NOUT (inverted). The output signal (OUT) is 1 if the input signals are different and 0 if they are equal.

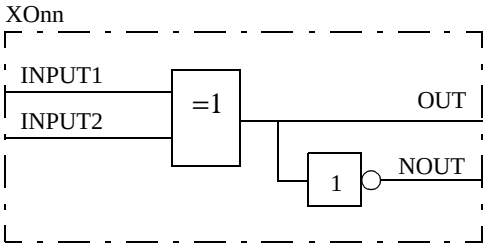

Figure 13: Function block diagram of the XOR function

The output signal (OUT) is set to 1 if the input signals are different and to 0 if they are equal. See truth table below.

Table 4: Truth table for the XOR function block

INPUT1	INPUT2	OUT	NOUT
0	0	0	1
0	1	1	0
1	0	1	0
1	1	0	1

2.8 Set-Reset (SR)

The function block Set-Reset (SR) (Figure 14:) has two inputs, designated SRnn-SET and SRnn-RESET, where nn presents the serial number of the block. Each SR circuit has two outputs, SRnn-OUT and SRnn-NOUT (inverted). The output (OUT) is set to 1 if the input (SET) is set to 1 and if the input (RESET) is 0. If the reset input is set to 1, the output is unconditionally reset to 0.

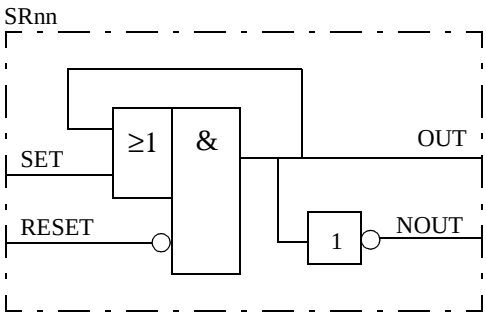

Figure 14: Function block diagram of the Set-Reset function

2.9 MOVE

The MOVE function blocks, also be called copy-blocks, are used for synchronisation of boolean signals sent between logics with slow execution time and logics with fast execution time.

There are two types of MOVE function blocks - MOF located *F*irst in the slow logic and MOL located *L*ast in the slow logic. The MOF function blocks are used for signals coming into the slow logic and the MOL function blocks are used for signals going out from the slow logic.

The REx 5xx terminal contains 3 MOF function blocks of 16 signals each, and 3 MOL function blocks of 16 signals each. This means that a maximum of 48 signals into and 48 signals out from the slow logic can be synchronised. The MOF and MOL function blocks are only a temporary storage for the signals and do not change any value between input and output.

Each block of 16 signals is protected from being interrupted by other logic application tasks. This guarantees the consistency of the signals to each other within each MOVE function block.

Synchronisation of signals with MOF should be used when a signal which is produced outside the slow logic is used in several places in the logic and there might be a malfunction if the signal changes its value between these places.

Synchronisation with MOL should be used if a signal produced in the slow logic is used in several places outside this logic, or if several signals produced in the slow logic are used together outside this logic, and there is a similar need for synchronisation.

Figure 15: shows an example of logic, which can result in malfunctions on the output signal from the AND gate to the right in the figure.

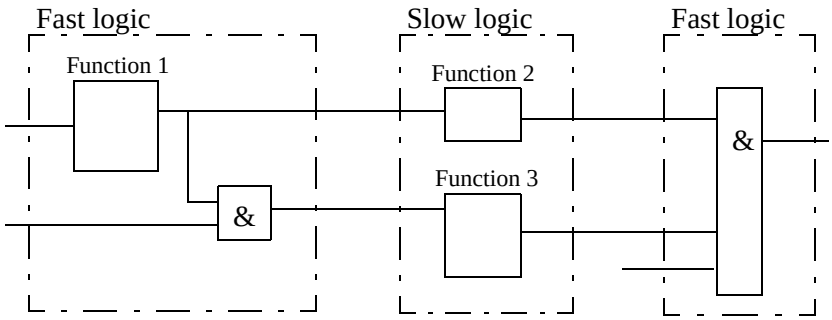

Figure 15: Example of logic, which can result in malfunctions

Figure 16: shows the same logic as in Figure 15:, but with the signals synchronised by the MOVE function blocks MOFn and MOLn. With this solution the consistency of the signals can be guaranteed.

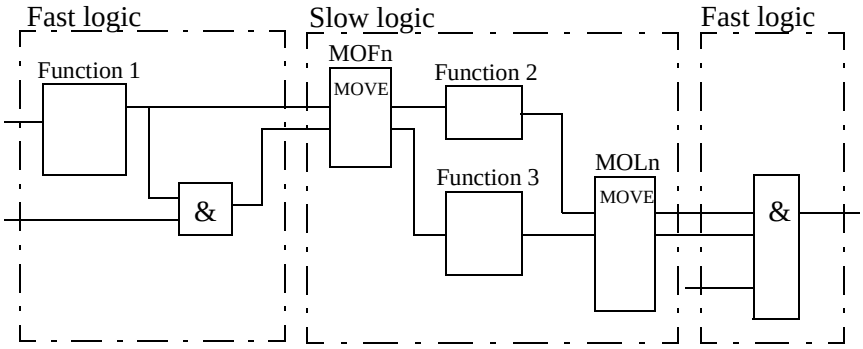

Figure 16: Example of logic with synchronised signals

MOFn and MOLn, n=1-3, have 16 inputs and 16 outputs. Each INPUTm is copied to the corresponding OUTPUTm, where m presents the serial number of the input and the output in the block. The MOFn are the first blocks and the MOLn are the last blocks in the execution order in the slow logic.

The appendix, attached to this document of the configurable logic, contains:

- Simplified terminal diagrams
- Description of the connection and production signals
- Description of the setting parameters

3 Setting

The time delays and pulse lengths are set from the CAP 531 configuration tool.

Both timers in the same logic block (the one delayed on pick-up and the one delayed on drop-out) always have a common setting value. Setting values of the pulse length are independent on one another for all pulse circuits.

4 Reports

All functional outputs in the logic blocks can be viewed on the local HMI at:

ServiceReport
Functions
AND (OR/etc.)

5 Configuration

The configuration of the logics is performed from the CAP 531 configuration tool.

Execution of functions as defined by the configurable logic blocks runs in a fixed sequence in two different cycle times, typical 6 ms and 200 ms.

For each cycle time, the function block is given an execution serial number. This is shown when using the CAP 531 configuration tool with the designation of the function block and the cycle time, for example, TMnn-(1044, 6). TMnn is the designation of the function block, 1044 is the execution serial number and 6 is the cycle time.

Execution of different function blocks within the same cycle time should follow the same order as their execution serial numbers to get an optimal solution. Always remember this when connecting in series two or more logical function blocks. When connecting function blocks with different cycle times, see the use of MOVE function blocks in the section “MOVE” on page 32.

Note: Be always careful when connecting function blocks with a fast cycle time to function blocks with a slow cycle time.

So design the logic circuits carefully and check always the execution sequence for different functions. In the opposite cases, additional time delays must be introduced into the logic schemes to prevent errors, for example, race between functions.

6 Testing

The user can separately test configuration logic circuits for each function group or for each function block. First, for each block, configure all:

- Input signals within the function group to the corresponding binary inputs.
- Output signals within the function group to the corresponding binary outputs.

Then check the operation of each separate function group by applying the rated DC voltage to the corresponding binary inputs and observing the logic status of the corresponding binary outputs.

Function blocks included in the operation of different built-in functions should be tested at the same time as their corresponding functions.

7 Appendix

7.1 Function blocks

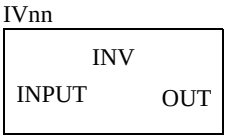

Figure 17: Function block of the Inverter function

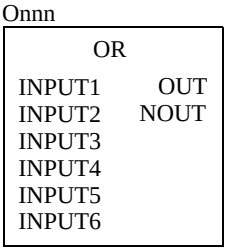

Figure 18: Function block of the OR function

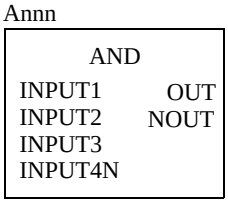

Figure 19: Function block of the AND function

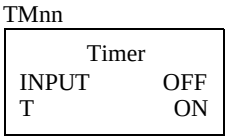

Figure 20: Function block of the Timer function

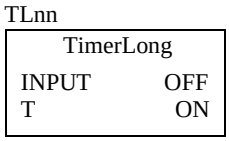

Figure 21: Function block of the Timer function with extended maximum time delay

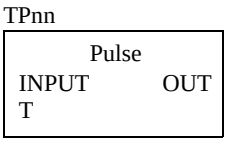

Figure 22: Function block of the Pulse function

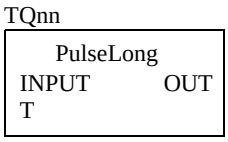

Figure 23: Function block of the Pulse function with extended maximum pulse length

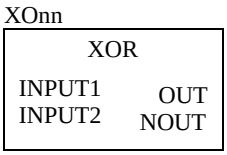

Figure 24: Function block of the Exclusive OR function

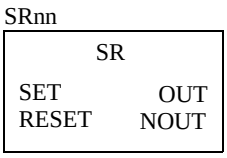

Figure 25: Function block of the Set-Reset function

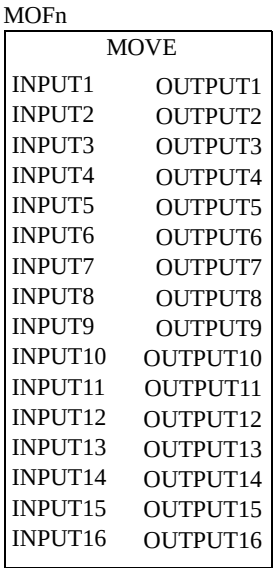

Figure 26: Function block of the MOVE First (MOF) function

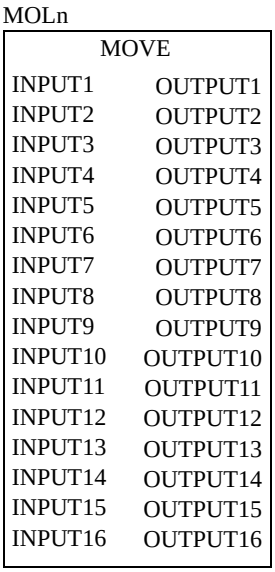

Figure 27: Function block of the MOVE Last (MOL) function

7.2 Signal lists

Table 5: Signal list for the inverter function

Block	Signal	Type	Description
IVxx-	INPUT	IN	Logic INV-Input to INV gate number xx
IVxx-	OUT	OUT	Logic INV-Output from INV gate number xx

Table 6: Signal list for the logic OR function

Block	Signal	Type	Description
Oxxx-	INPUT1	IN	Logic OR-Input 1 to OR gate number xxx
Oxxx-	INPUT2	IN	Logic OR-Input 2 to OR gate number xxx
Oxxx-	INPUT3	IN	Logic OR-Input 3 to OR gate number xxx
Oxxx-	INPUT4	IN	Logic OR-Input 4 to OR gate number xxx
Oxxx-	INPUT5	IN	Logic OR-Input 5 to OR gate number xxx
Oxxx-	INPUT6	IN	Logic OR-Input 6 to OR gate number xxx
Oxxx-	NOUT	OUT	Inverted output from OR gate number xxx
Oxxx-	OUT	OUT	Output from OR gate number xxx

Table 7: Signal list for the logic AND function

Block	Signal	Type	Description
Axxx-	INPUT1	IN	Logic AND-Input 1 to AND gate number xxx
Axxx-	INPUT2	IN	Logic AND-Input 2 to AND gate number xxx
Axxx-	INPUT3	IN	Logic AND-Input 3 to AND gate number xxx
Axxx-	INPUT4N	IN	Logic AND-Input 4 (inverted) to AND gate number xxx
Axxx-	NOUT	OUT	Inverted output from AND gate number xxx
Axxx-	OUT	OUT	Output from AND gate number xxx

Table 8: Signal list for the timer function

Block	Signal	Type	Description
TMxx-	INPUT	IN	Logic Timer-Input to timer xx
TMxx-	OFF	OUT	Output from timer number xx, Off delay
TMxx-	ON	OUT	Output from timer number xx, On delay

Table 9: Signal list for the timer (long) function

Block	Signal	Type	Description
TLxx-	INPUT	IN	Logic Timer-Input to long timer xx
TLxx-	OFF	OUT	Output from long timer number xx, Off delay
TLxx-	ON	OUT	Output from long timer number xx, On delay

Table 10: Signal list for the pulse timer function

Block	Signal	Type	Description
TPxx-	INPUT	IN	Logic pulse timer, Pulse-Input to pulse timer xx
TPxx-	OUT	OUT	Output from pulse timer number xx

Table 11: Signal list for the pulse timer (long) function

Block	Signal	Type	Description
TQxx-	INPUT	IN	Logic pulse timer, Pulse-Input to pulse long timer xx
TQxx-	OUT	OUT	Output from pulse long timer number xx

Table 12: Signal list for the logic XOR function

Block	Signal	Type	Description
XOxx-	INPUT1	IN	Logic XOR-Input 1 to XOR gate number xx
XOxx-	INPUT2	IN	Logic XOR-Input 2 to XOR gate number xx
XOxx-	NOUT	OUT	Inverted output from XOR gate number xx
XOxx-	OUT	OUT	Output from XOR gate number xx

Table 13: Signal list for the S/R gate function

Block	Signal	Type	Description
SRxx-	RESET	IN	RESET-Input to SET/RESET gate number xx
SRxx-	SET	IN	SET-Input to SET/RESET gate number xx
SRxx-	NOUT	OUT	Inverted output from SET/RESET gate number xx
SRxx-	OUT	OUT	Output from SET/RESET gate number xx

Table 14: Signal list for the move first (MOF) function

Block	Signal	Type	Description
MOFx-	INPUTn	IN	Logic MOVE-Input n (n=1-16) to MOFx
MOFx-	OUTPUTn	OUT	Output n (n=1-16) from MOFx

Table 15: Signal list for the move last (MOL) function

Block	Signal	Type	Description
MOLx-	INPUTn	IN	Logic MOVE-Input n (n=1-16) to MOLx
MOL1-	OUTPUTn	OUT	Output n (n=1-16) from MOLn

7.3 Setting tables

Table 16: Setting table for the timer function (TMxx-)

Parameter	Range	Unit	Default	Parameter description
T	0.000-60.000	s	0.000	Delay for timer xx

Table 17: Setting table for the timer (long) function (TLxx-)

Parameter	Range	Unit	Default	Parameter description
T	0.000-90000.000	s	0.000	Delay for long timer xx

Table 18: Setting table for the pulse timer function (TPxx-)

Parameter	Range	Unit	Default	Parameter description
T	0.000-60.000	s	0.010	Pulse length of pulse timer xx

Table 19: Settings table for the puls timer (long) function (TQxx-)

Parameter	Range	Unit	Default	Parameter description
T	0.000-90000.000	s	0.100	Pulse length of pulse long timer xx

1 Application

The REx 5xx protection and control terminals have a complex design with many included functions. The included self-supervision function and the INTernal signals function block provide good supervision of the terminal. The different safety measures and fault signals makes it easier to analyse and locate a fault.

Both hardware and software supervision is included and it is also possible to indicate eventual faults through a hardware contact and/or through the software communication.

2 Design

The self-supervision can indicate a failure in two ways. First, by means of the potential free alarm contact located on the power supply module. See Figure 3:. All different self-supervision functions (outputs) are connected to this contact so any fault within the hardware modules will activate the contact. The second way is through the software function block INT--, see Figure 1: and 4. By this, any fault signal is available through the general communication and at the local HMI. The signals from the function block can be used to block other protection functions if required/desired.
The failure signals will be activated by the same faults in both the cases.
It is also possible to exactly identify a faulty I/O through an error signal from each I/O module. An example is IOxx-Error, see Figure 2:.

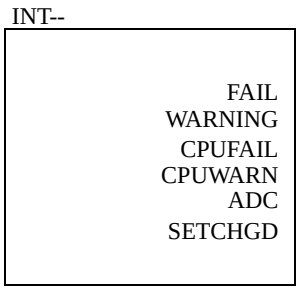

Figure 1: Function block INTernal signals.

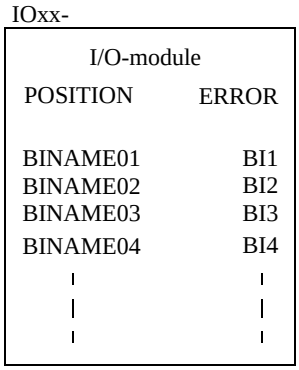

Figure 2: Error signal from an I/O module.

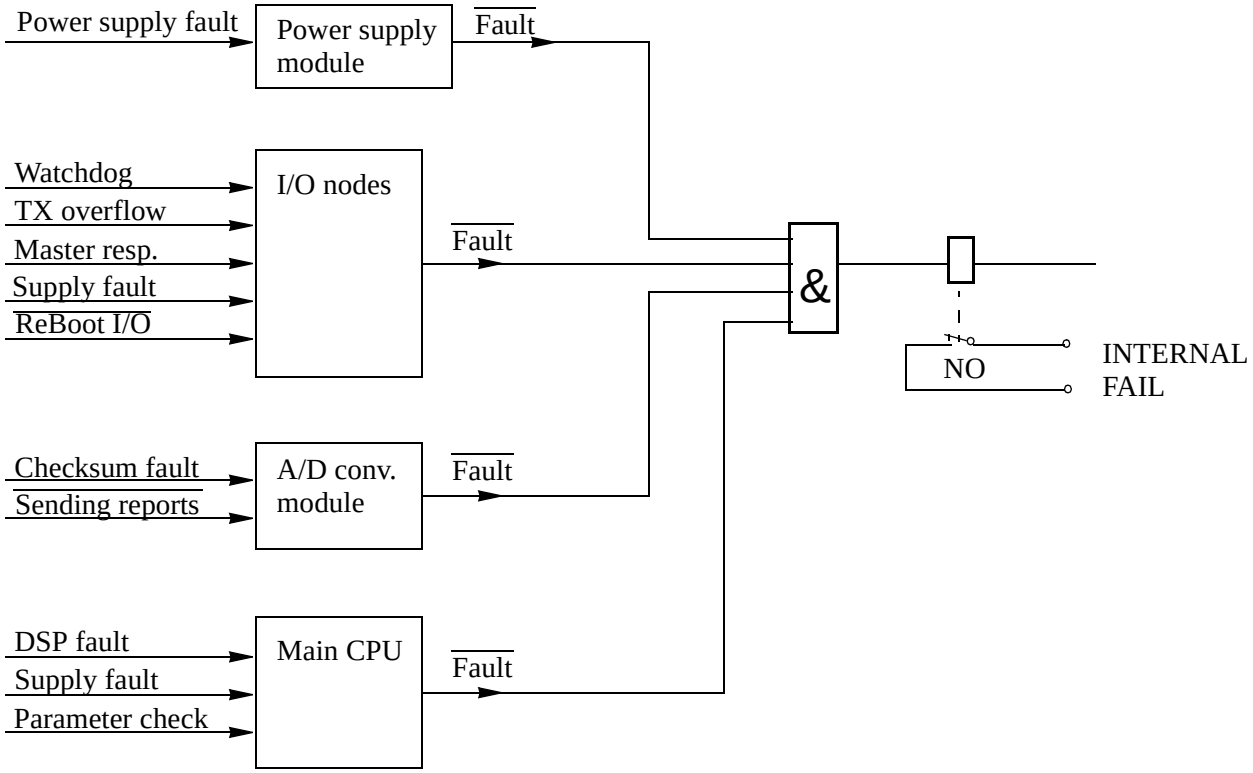

I/O nodes = BIM, BOM, IOM
PSM, MIM or DCM
DSP = Digital Signal Processor
xxxx = Inverted signal

Figure 3: Hardware self-supervision, potential-free alarm contact.

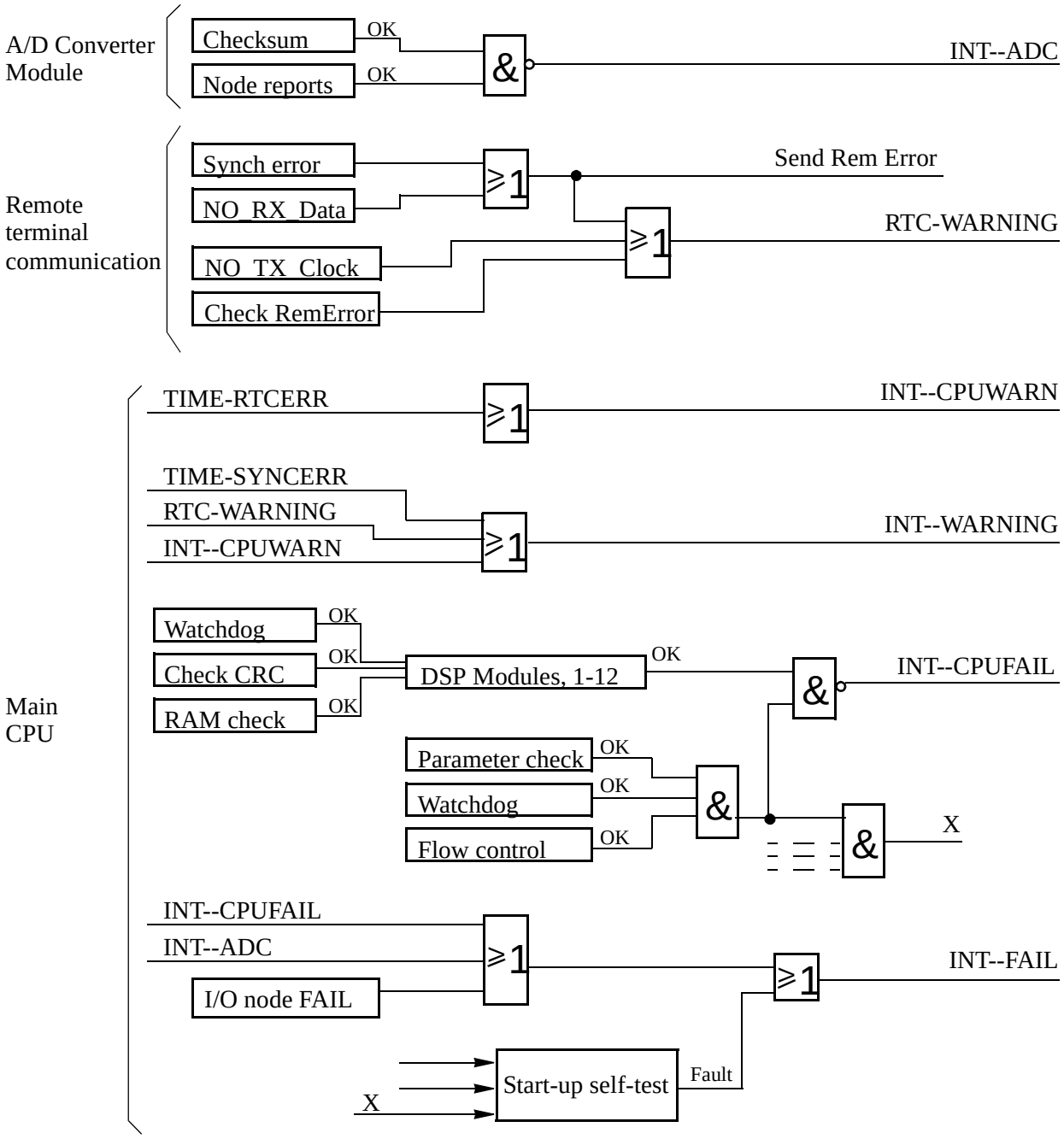

RTC-WARNING = DIFL-COMFAIL or
RTC1-COMFAIL +
RTC2-COMFAIL

I/O node = BIM, BOM, IOM, PSM, MIM, DCM
(described in the hardware design)

Figure 4: Software self-supervision, function block INTernal signals.

1 Application

The protection and control terminals have a complex configuration with many included functions. To do the testing procedure at commissioning easier, the terminals include the feature to individually block a single, several or all functions.

This means that a service engineer exactly can see when a function is activated or trips. It also enables to activate a sequence of functions to check correct functionality and to check parts of the configuration etc.

2 Design

This blocking function is only active during operation in the test mode, see example in Figure 1:. When exiting the test mode, entering normal mode, this blocking is disabled and everything is set to normal operation. All testing will be done with actually set and configured values within the terminal. No settings etc. will be changed. Thus no mistakes are possible.

The blocked functions will still be blocked next time entering the test mode, if the blockings were not reset.

The blocking of a function concerns all output signals from the actual function, so no outputs will be activated.

Each of the terminal related functions is described in detail in the documentation for the actual unit. The description of each function follows the same structure (where applicable).

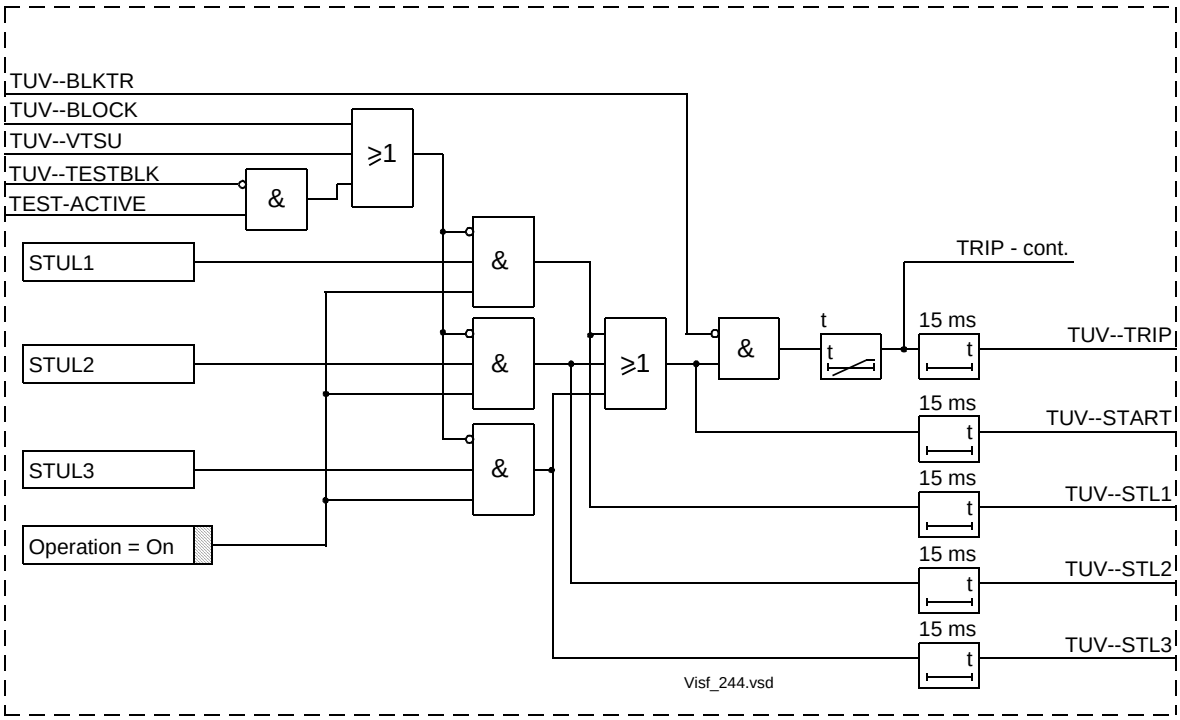

Figure 1: Example of blocking the Time delayed Under-Voltage function.

1 Application

Time-tagging of internal events and disturbances is an excellent help when evaluating faults. Without time synchronisation, only the events within the terminal can be compared to one and another. With time synchronisation, events and disturbances within the entire station, and even between line ends, can be compared during an evaluation.

If external time synchronisation is applied, there are two main alternatives. Either the synchronisation message is applied via any of the communication ports of the terminal as a telegram message including date and time, or as a minute pulse, connected to a binary input. The minute pulse is used to fine tune already existing time in the terminals.

2 Theory of operation

The REx 5xx terminal has its own internal clock with date, hour, minute, second and millisecond. It has a resolution of 1 ms.

The clock has a built-in calendar for 30 years that handles leap years. Any change between summer and winter time must be handled manually or through external time synchronisation. The clock is powered by a capacitor, to bridge interruptions in power supply without malfunction.

The internal clock is used for time-tagging disturbances, events in SMS and SCS, and internal events.

3 Setting

The internal time can be set on the local human-machine interface (HMI) at:

Settings
Time

The time is set with year, date and time. See the document *"Local human-machine interface"*, for more information.

The source of the time synchronisation is set on the local HMI at:

Configuration
Time

When the setting is performed on the local HMI, the parameter is called TimeSyncSource. The time synchronisation source can also be set from the CAP 531 tool. The setting parameter is then called SYNCSCR. The setting alternatives are:

- None (no synchronisation)
- LON, SPA or IEC
- Minute pulse, positive or negative flank

LON is set when the time synchronisation is performed via SCS, SPA is set when the time synchronisation is performed via SMS, and IEC when the communication protocol IEC 870-5-103 is used including time synchronisation. Minute positive flank or Minute negative flank is set when a binary input is used for minute pulse synchronisation.

The function input to be used for minute-pulse synchronisation is called TIME-MINSYNC.

The internal time can be set manually down to the minute level, either via the local HMI or via any of the communication ports. The time synchronisation fine tunes the clock (seconds and milliseconds). If no clock synchronisation is active, the time can be set down to milliseconds.

4 Appendix

4.1 Function block

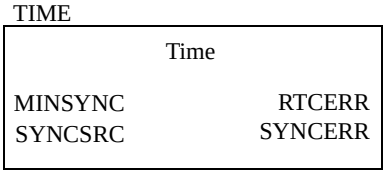

4.2 Signal list

Block	Signal	Type	Description
TIME-	MINSYNC	IN	Input for ext synch of real time clock by minute pulses
TIME-	RTCERR	OUT	Real-time clock error
TIME-	SYNCERR	OUT	Time synchronisation error

4.3 Setting table

Parameter	Range	Unit	Default	Parameter description
SYNCSRC	No, LO, SP, IEC, Po, Ne		No	Source: 0=none, 1=LON, 2=SPA, 3=IEC, 4=BI pos flank, 5=BI neg flank