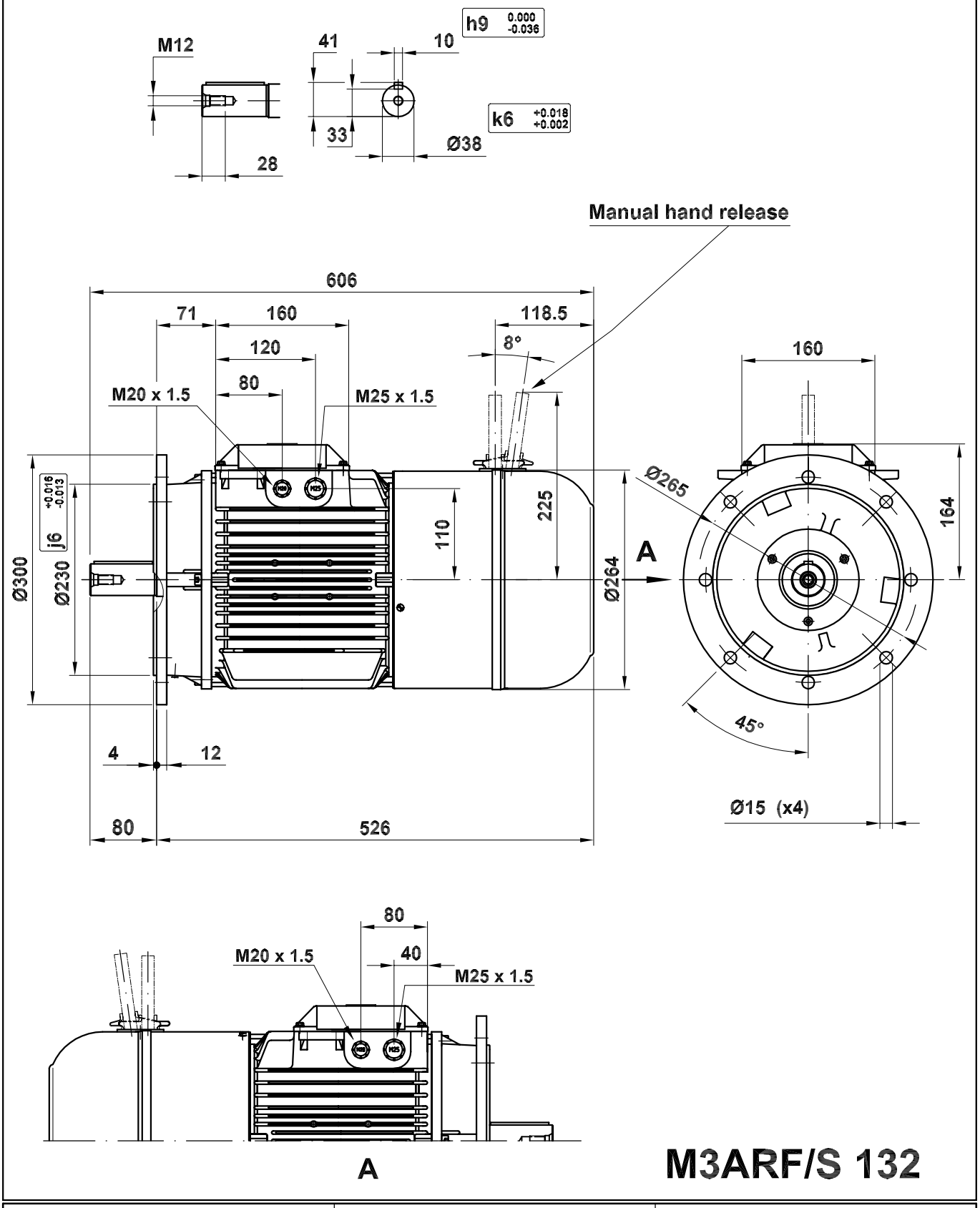

M3ARF/S 132

Motor Dimension Print	Motor Type : M3ARF/S 132	Document Nº : AE 4431 5138-203R

Description :

Brake motor flange mounted IM 3001/Motor freno con brida IM3001

Unit :	División Motores, Spain.	Issued by :	IKA/G.Blanes	Replaces :	To date 1999-01-15
Date :	2002-01-25	Approved by :	IKA/G.Blanes	Replaced by :	

ABB Automation Products, S.A.

Customer Reference :

ABB