Protection and Connection

EasyLine XLP
Fuse Switch Disconnector 1-2-3-4 pole

Power and productivity
for a better world™

Contents

Introduction 1

Overview 1 and 2-pole 2

Overview 3-pole 3

Overview 4-pole 4

Electronic Fuse Monitoring 5

Busbar Adapters 6

Cable clamps & bolts 7

Technical Data 8

Ordering information 9

Dimension drawings 10

Fuse Switch Disconnectors
1, 2, 3 and 4 pole solutions, 100A - 630A

1

The EasyLine family fulfils the highest requirements for modern switch fuses with a total safety concept. The fuse switches are tested according to the EN/IEC 60947-3 standard, meeting all the requirements for isolation, current making, performance and safety.

Selectivity

The melting curves and current limiting diagrams for NH fuse links are given in the EN/IEC 60269-2 standard. The standardised fuse characteristics and high degree of current limitation ensure a simple and effective co-ordination with fuse links and other devices. Selecting the right fuse type for your installation is very simple and can be done without complicated calculations or tools.

Fuses provide selective coordination. When a fault occurs, only the fuse nearest a fault trips without upstream fuses being affected.

When more power is needed in an installation, more feeders can be added without changing the present structure or any new selectivity calculations. Fuse links will assure selectivity in the installation by 1,6:1 difference in the rated current.

Reduction of downtime and lower maintenance cost

Fuse links withstand high short circuit levels. After fuse operation, only the fuse link needs to be replaced and the rest of the network remains functional. The fuses can be replaced easily and quickly, decreasing the plant downtime and maintenance cost.

High performance and reliability

Fuses have very high limiting capability, clearing faults rapidly at different voltage and short circuit levels.

As the fuse link body is filled with quartz sand, there will be no emission of gases or arcs when a short circuit occurs. This again leads to less stress on the network and a higher degree of personal safety.

XLP 1-,2-,3- and 4-pole solutions

Fuse Switch Disconnectors
1, 2, 3 and 4 pole solutions, 100A - 630A

- All units are applicable for AC Voltage, and the 1-pole and 2-pole range are also rated for DC voltage.
- Compact XLP000
- Typetested according to IEC60947-3
- Fullfills BGV A2
- Easy to recycle / EN14001 standards
- Quick-make operation device
- V-0 plastic materials
- The 3-pole range from size 00 to size 3 (160A - 630A) are also designed to be used in distribution systems by use of a busbar adapter for easy installation.

Easy cable connections

- All the XLP cable terminals can be delivered with integrated bolts for cable lugs or with integrated bridge clamps (BC) for easy direct cable connection.

Safe installation and operation

- Sturdy design
- Integrated IP20 cable termination
- IP30 degree of protection from the front
- Voltage measuring from the front

Easy to install

- Wide range of cable terminals and snap-on accessories
- Compact, add-on Electronic Fuse Monitoring (EFM)
- Busbar adapters available for 40mm, and 60mm distance in-between centre of the phases for each busbar systems.

All variants of poles available in the different sizes

- NH00/160A, NH1/250A, NH2/400A and NH3/630A.
- The XLP 1-pole and 2-pole: Rated operational votage: 220-440VDC / -690VAC
- The XLP 4-pole: Rated operational votage: 500VAC

Overview
XLP 1 and 2-pole

2

Features

- Rated operational voltage: 220VDC / -690VAC
- Rated operational current: 160 - 630A
- Micro auxillary switches, 1 or 2 pcs per pole
- Single cable shroud per phase
- Cable clamps
- Front frames
- Padlocking
- Sealing facility

Application

- UPS: Uninterruptible Power Supply, used for the power supply for computer/servers, storage devices, communication network systems, industry control systems, etc.
- Telecom Power Supplies.
- General protection in smaller distribution panels using 1-pole or 2-pole configurations AC or DC.

XLP, 1 pole

XLP, 2 pole

Overview
3-pole, XLP000

Features

- Compact design for NH 00 compact fuses up to 100 A (width = 21mm)
- Modern integrated cable clamps for 1,5 - 35 mm² cables
- Integrated cable shrouds IP 20
- Snap on for DIN rail mounting (accessory)
- Front frames for 1 - 3 apparatus (accessory)
- Micro auxiliary switches, 1or 2 pcs (accessory)
- Sealing facility

3-pole, XLP000

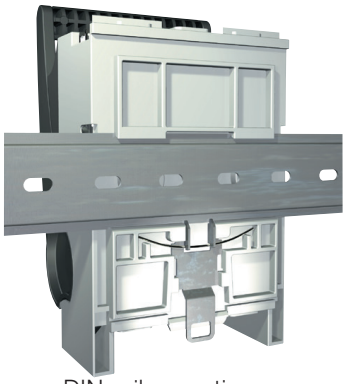

DIN rail mounting

Sealing facility

Voltage measurement

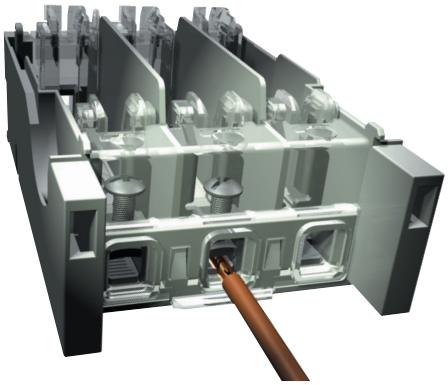

Integrated cable clamps
for 1,5 - 35 mm² cables

Front frames for
1-3 apparatuses

Overview
3-pole, XLP00

- Electronic fuse monitoring (EFM)
- Micro auxilliary switches, 1 or 2 pcs
- Auxilliary switches, 1 NO or 1 NC acc. to IEC 60947-5-1
- Cable shrouds
- Front frames for 1 - 3 apparatus
- Wide range of cable terminal clamps (See page 13 and 14)
- Kit for double DIN rail mounting
- Adapter for 40 and 60 mm busbar distance
- Padlocking facility
- Sealing facility

3

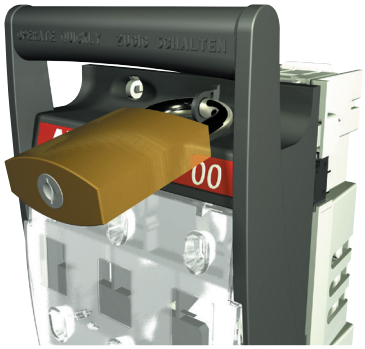

Padlocking and
Sealing facilities

Electronic fuse monitoring
showing detail for remote
signaling

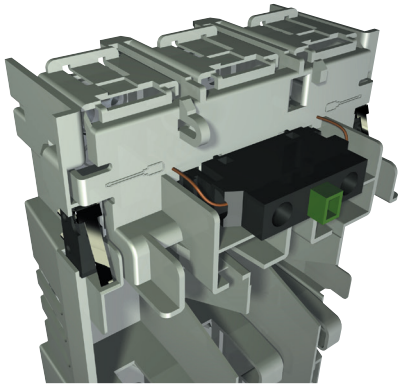

Micro auxiliary switch on the sides.
Auxiliary switch NO or NC in the front

Cable shrouds

Overview
3-pole, XLP1, XLP2 and XLP3

- Electronic fuse monitoring (EFM)
- Micro auxilliary switches, 1 or 2 pcs
- Auxilliary switches, 1 NO or 1 NC acc. to IEC 60947-5-1
- Cable shrouds
- Front frames
- Wide range of cable terminal clamps (See page 13 and 14)
- Adapter for 40mm (only XLP1) and 60mm busbar distance
- Padlocking facility
- Sealing facility

3

Overview 4-pole
4-pole, XLP1, XLP2 and XLP3

XLP 4-pole

- Rated operational voltage: 550VAC
- Rated operational current: 160 - 630A
- Micro auxillary switches, 1 or 2 pcs per pole
- Single cable shroud per phase
- Cable clamps
- Front frames
- Padlocking
- Sealing facility

Application

- General fuse protection in 4-pole power supply networks with switching neutral.
- Secondary power generators from public networks

4

Electronic Fuse Monitoring
3-pole

The Electronic Fuse Monitoring (EFM) is a fuse blown indication device. The EFM unit has an integrated potentional free relay (1NO, 1NC) for remote signal/alarm. It will be automatically reset after the blown fuse has been replaced and the green LED turns on again.

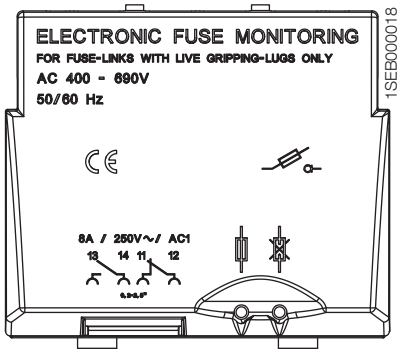

The matrix below show all possible cases of indication

Fuse status			Relay contacts			
	Green	Red	NO contact 13, 14		NC contact 11, 12	
1. Closed			Open	Closed	Open	Closed
Fuses OK	●	●	X			X
Fuses BLOWN	●	●		X	X	
2. Open						
Fuses OK	●	●	X			X
Fuses BLOWN	●	●	X			X

Power supply to the EFM unit from phase L2 and L3

The fuse monitor is connected to the gripping lugs of the fuses.

NOTE :
- NH fuses with insulated gripping lugs can not be used.
- The EFM unit requires that the supply side of the XLP should be on top of the switch.

Technical data:	
Min. operation voltage	290V -10%
Max. operation voltage	690V +10%
Operation temp. range	-25/+80C
Operation time	< 2 sec.
Power consumption	< 3VA
Uimp. over a blown fuse	12,3kV
Uimp. between phases	9,8kV
Uimp. between main circuit / relay contacts	9,8kV
Dielectric test voltage input/output	3,5kV / 50Hz / 1 minute
Electrostatic Discharge	EN 61000-4-2 +- 4kV
Electrical Fast Transient	EN 61000-4-4 +- 4kV
Conducted Fast Transient	EN 61000-4-6 10Vrms/150kHz-80MHz
Recommended cable size	AWG 22-12/0,2-2,5mm2
EMC tested	Yes
Relay:	
Nominal current	8A
Max. switching voltage	240VAC, 24VDC

Busbar Adapters
60mm for XLP00, XLP1, XLP2 and XLP3

6

60mm busbar system
Designed for 60 mm busbar distance

XLP00 and XLP1 use busbar Cu/Al 5 or 10mm x 10-30mm. 3 pieces of distance shoes for 5 mm busbars are included with the adapter.
For XLP2 and XLP3 use busbar Cu/Al 5-10mm x 10-30mm. The adapters are available for cable connection above (A) or cable connection below (B).

Distribution system for standard Busbars type SF-60
The busbar system type SF-60 is designed to take busbars of different cross sections, and it is type tested to VDE-0660, section 50 and IEC 439-1.

The SF-60 Busbar system features

Busbar width	10 - 30 mm
Busbar thickness	5 or 10 mm
Centre distance between busbars	60 mm

Cable connection supply module

Electrical data	690V / 440A
Cable connections	Al/Cu 35 - 120mm²
Dimension (W x H x D)	81 x 200 x 84 mm

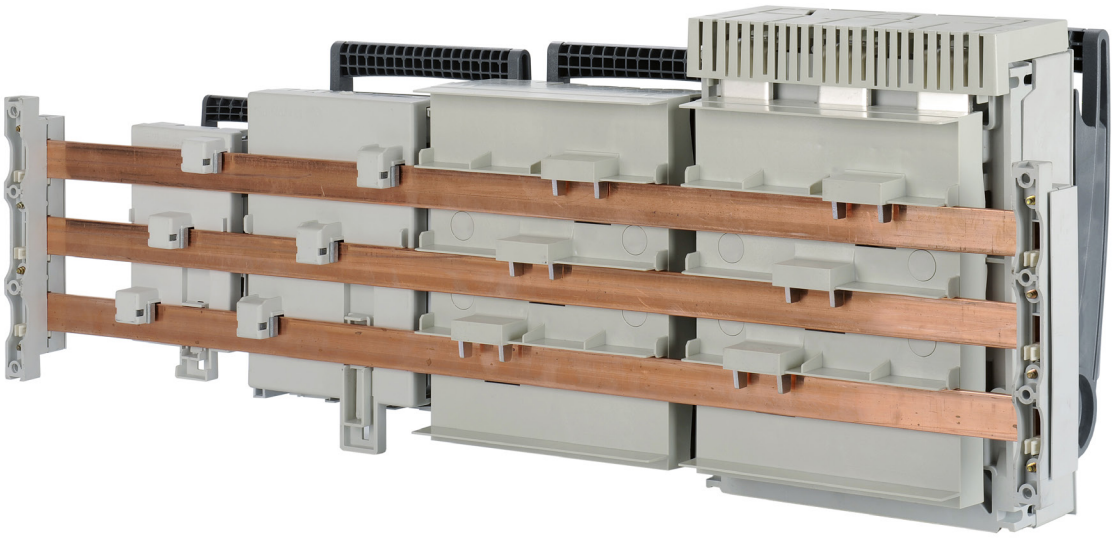

Busbar Adapters
40mm for XLP00 and XLP1

40mm busbar system
Cu 12 x 5mm or 12 x 10mm.
Adapter 95 mm depth to busbars: A 40/95

40 mm Busbar system for Striebel & John switchboards
Specially designed for the Striebel & John Busbar system 250A and 360A.
Cu 12x5 or 12x10 mm.
Adapter 75 mm depth to busbars, cable connection below: A 40/75
Adapter 120 mm depth to busbars, cable connection below: A 40/120

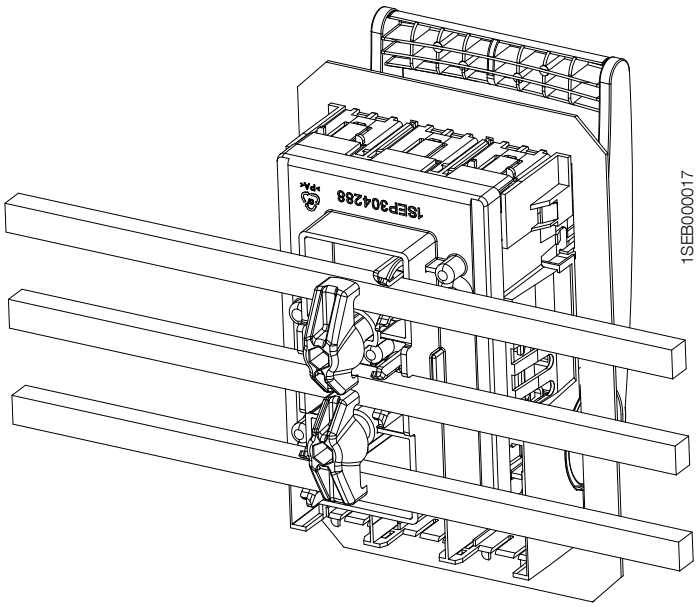

6

Cable clamps & bolts

Type of clamp/bolt	Conductor cross section min-max					Order code
	Busbars height/weight (mm2)	Conductor flexible (mm2)	Rm/Sm (mm2)	Re/Se (mm2)	Torque (Nm) [1]	
XLP000 Cage clamp (CC)		1,5 -25	1,5 - 35	1,5 - 35	3,2	Incl. in the switch
XLP00 Bridge clamp (BC)		1,5 - 35	1,5 - 50	1,5 - 50	3,5	1SEP407733R0001
Triple clamp (TC)		1,0 - 10	1,0 - 10	1,0 - 10	3,5	1SEP407787R0001
Single prism clamp (SPC)		1,5 - 16	1,5 - 16	1,5 - 16	3,5	1SEP407732R0001
		25 - 50	25 - 70	25 - 70		
Feeding clamp (FC) for XLP00 - 6BC		25 - 70	25 - 95	25 - 95	10	1SEP407811R0001
Bolt M8x16 DIN933	20 x 4				10	NHP 400940R0006
Bolt M8x16 DIN933 Cable lug DIN46234		10 - 95	10 - 95	10 - 95		
Bolt M8x16 DIN933 Cable lug DIN46235		16 - 70	16 - 70	16 - 70		
XLP1 Bridge clamp (BC)	19 x 10	16 - 70	16 - 95	16 - 95	10	1SEP407733R0002
Single prism clamp (SPC)		16 - 70	16 - 95	16 - 95	10	1SEP407732R0002
		95 - 150	95 - 150 [2]	95 - 150		
Doube prism clamp (DPC)		2x70 - 2x95	2x70 - 2x150	2x70 - 2x150	10	NHP 403631R0002
Bolt M10x20 DIN933	40 x 10				16	NHP 403625R0001
Bolt M10x20 DIN933 Cable lug DIN46234		10 - 240	10 - 240	10 - 240		
Bolt M10x20 DIN933 Cable lug DIN46234		16 - 240	16 - 240	16 - 240		

1) For correct Torque (Nm) values, study the installation description delivered with the devices

2) The Sm (sector shaped stranded) 150mm² have to be round formed before inserted in the Prism clamp

Cable clamps & bolts

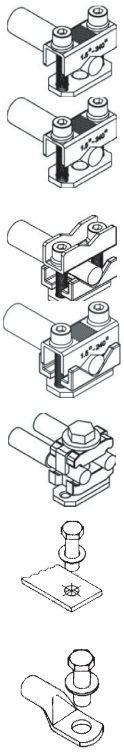

Type of clamp/bolt	Conductor cross section min-max					Order code
	Busbars height/weight (mm2)	Conductor flexible (mm2)	Rm/Sm (mm2)	Re/Se (mm2)	Torque (Nm) [1]	
XLP2 and 3						
Bridge clamp (BC)	14 x 26	16-70 (M8x25) 300 (M8x40)	16-50 (M8x25) 185-300 (M8x40)	16-50 (M8x25) 185-300 (M8x40)	14	1SEP407953R0001
		70 - 240	50 - 185	50 - 185		
Single prism clamp (SPC)		95 - 240	70 - 240	95 - 240	14	1SEP407954R0001
		25 - 95	35 - 70	50- 70		
Double Prism clamp (DPC)		2x35 - 2x120	2x35 - 2x150	2x35 - 2x50 2x50 - 2x185	22	1SEP407956R0001
Bolt M12x30 DIN933	50 x 12				25	NHP 403626R0001
Bolt M12x30 DIN933 Cable lug DIN46234		10 - 240	10 - 240	10 - 240		
Bolt M12x30 DIN933 Cable lug DIN46235		16 - 300	16 - 300	16 - 300		

1) For correct Torque (Nm) values, study the installation description delivered with the devices

Type tested according to standard: EN IEC 60947-1 and DIN VDE 0295.

Explanations:

Flexible: Multi stranded
Re: Round solid
Se: Sector shaped solid
Rm: Round stranded
Sm: Sector shaped stranded

Technical Data

1-pole		XLP00			XLP1			XLP2			XLP3		
Rated operational voltage U_e AC	(V)	-	500	690	-	500	690	-	500	690	-	500	690
Rated operational voltage U_e DC	(V)	220	-	-	220	-	-	220	-	-	220	-	-
Rated operational current I_e	(A)	160	160	125	250	250	200	400	400	315	630	630	500
Thermal current with fuse-link I_{th}	(A)	160	160	160	250	250	250	400	400	-	630	630	-
Utilization category		DC22B	AC22B	AC21B	DC22B	AC22B	AC21B	DC22B	AC22B	AC21B	DC22B	AC22B	AC21B
Rated insulation voltage U_i	(V)	1000			1000			1000			1000		
Rated impulse withstand voltage U_{imp}	(kV)	8			8			8			8		
Rated conditional short circuit current	(kArms)	50			50			50			50		
Rated frequency	(Hz)	50 - 60			50 - 60			50 - 60			50 - 60		
Power loss (I_{th}) without fuselink, per phase	(W)	3,5			7,5			13			24		
Electrical durability		200			200			200			200		
Mechanical durability		1400			1400			800			800		
Degree of protection from the front	Open	IP20			IP20			IP20			IP20		
according to IEC60529	Closed	IP30			IP30			IP30			IP30		

2-pole		XLP00			XLP1			XLP2			XLP3		
Rated operational voltage Ue AC	(V)	-	500	690	-	500	690	-	500	690	-	500	690
Rated operational voltage Ue DC	(V)	220	-	-	440	-	-	440	-	-	440	-	-
Rated operational current Ie	(A)	160	160	125	250	250	200	400	400	315	630	630	500
Thermal current with fuse-link Ith	(A)	160	160	160	250	250	250	400	400	-	630	630	-
Utilization category		DC22B	AC22B	AC21B	DC22B	AC22B	AC21B	DC22B	AC22B	AC21B	DC22B	AC22B	AC21B
Rated insulation voltage U_i	(V)	1000			1000			1000			1000		
Rated impulse withstand voltage U_{imp}	(kV)	8			8			8			8		
Rated conditional short circuit current	(kArms)	50			50			50			50		
Rated frequency	(Hz)	50 - 60			50 - 60			50 - 60			50 - 60		
Power loss (I_{th}) without fuselink, per phase	(W)	3,5			7,5			13			24		
Electrical durability		200			200			200			200		
Mechanical durability		1400			1400			800			800		
Degree of protection from the front	Open	IP20			IP20			IP20			IP20		
according to IEC60529	Closed	IP30			IP30			IP30			IP30		

Technical Data

3-pole		XLP000			XLP00			XLP1		XLP2		XLP3	
For NH fuse links acc. to IEC60269-2-1		000 max width = 21mm			00			1		2		3	
Rated operational voltage U_e AC	(V)	400	500	690	400	500	690	500	690	500	690	500	690
Rated operational current I_e AC	(A)	80	100	50	125	160	125	250	200	400	315	630	500
Thermal current with fuse link I_{th}	(A)	100			160			250		400		630	
Rated insulation voltage U_i	(V)	690			1000			1000		1000		1000	
Rated impulse withstand voltage U_{imp}	(kV)	6			8			8		8		8	
Rated conditional short circuit current	(kArms)	50			50			50		50		50	
Rated making and breaking capacity		AC23B	AC22B	AC21B	AC23B	AC22B	AC21B	AC22B	AC21B	AC22B	AC21B	AC22B	AC21B
Rated frequency	(Hz)	50 - 60			50- 60			50 - 60		50 - 60		50 - 60	
Power loss at I_{th} without fuse link/per phase	(W)	1,4W			3,5W			7,5W		13W		24W	
Max allowed poweloss in the Fuse per phase	(W)	7,5W			12W			23W		30W		48W	
Electrical durability		300			200			200		200		200	
Mechanical durability		1700			1400			1400		800		800	
Degree of protection from the front acc. to IEC60529	Open	IP20			IP20			IP20		IP20		IP20	
	Closed	IP30			IP30			IP30		IP30		IP30	

4-pole		XLP00		XLP1		XLP2		XLP3	
Rated operational voltage Ue AC		500		500		500		500	
Rated operational current Ie		160		250		400		630	
Thermal current with fuse-link Ith		160		250		400		630	
Utilization category		AC22B		AC22B		AC22B		AC22B	
Rated insulation voltage U_i	(V)	1000		1000		1000		1000	
Rated impulse withstand voltage U_{imp}	(kV)	8		8		8		8	
Rated conditional short circuit current	(kArms)	50		50		50		50	
Rated frequency	(Hz)	50 - 60		50 - 60		50 - 60		50 - 60	
Power loss (I_{th}) without fuselink, per phase	(W)	3,5		7,5		13		24	
Electrical durability		200		200		200		200	
Mechanical durability		1400		1400		800		800	
Degree of protection from the front according to IEC60529	Open	IP20		IP20		IP20		IP20	
	Closed	IP30		IP30		IP30		IP30	

Ordering information
XLP 3-pole

XLP000

XLP00

XLP1

Type	Item Description	Order code	Weight (Kg)
XLP000			
XLP000-6CC	100A, incl. 6 Cage Clamps	1SEP201428R0001	0,46
XLP000-6CC in carton	100A, incl. 6 Cage Clamps in carton	1SEP201428R0002	
XUP000-6CC	100A, Fuse Base, incl. 6 Cage Clamps	1SEP201432R0001	0,34
XLP00			
XLP00	160A without clamps or bolts	1SEP101890R0001	0,55
XLP00-6BC	160A, incl. 6 Bridge Clamps	1SEP101890R0002	0,63
XLP00-6BC-3M8	160A, incl. 6 Bridge Clamps and 3 x M8x16mm bolts	1SEP101890R8002	0,65
XLP00-6M8	160A, incl. 6 x M8x16mm bolts	1SEP101890R0004	0,63
XLP00-EFM-6BC	160A, incl. Electronic Fuse Monitoring and 6 Bridge Clamps	1SEP101890R0012	0,68
XLP00-MNS adapter-3BC	160A, incl. MNS adapter and 3 Bridge Clamps	1SEP101890R0402	0,88
XLP00-MNS adapter-EFM-3BC	160A, incl. MNS adapter, EFM and 3 Bridge Clamps	1SEP101890R0412	1,1
XLP00-A60/60-B-3BC-below	160A, incl. A60/60 adapter and 3 Bridge Clamps, cable below	1SEP101916R0001	0,95
XLP00-A60/60-B-below	160A, incl. A60/60 adapter and cable below, without clamps or bolts	1SEP101916R0002	0,95
XLP00-A60/60-A-3BC-above	160A, incl. A60/60 adapter and 3 Bridge Clamps, cable above	1SEP101917R0001	0,95
XLP00-A40/95-B-3BC-below	160A, incl. A40/95 adapter and 3 Bridge Clamps, cable below	1SEP101889R0002	1,1
XLP00-A40/75-B-3BC-below	160A, incl. A40/75 adapter and 3 Bridge Clamps, cable below	1SEP101898R0002	1
XLP00-A40/75-B-3M8-below	160A, incl. A40/75 adapter and 3 x M8 bolts, cable below	1SEP101898R0004	1
XLP00-A40/120-B-3BC-below	160A, incl. A40/120 adapter and 3 Bridge Clamps, cable below	1SEP101899R0002	1,2
XLP00-A40/120-B-3M8-below	160A, incl. A40/120 adapter and 3 x M8x16mm bolts, cable below	1SEP101899R0004	1,2
XLP00-A40/120-A-3BC-above	160A, incl. A40/120 adapter and 3 Bridge Clamps, cable above	1SEP101899R0102	1,2
XLP00-A40/120-A-3M8-above	160A, incl. A40/120 adapter and 3 x M8 bolts, cable above	1SEP101899R0104	1,2
XLP1			
XLP1	250A without clamps or bolts	1SEP101891R0001	1,6
XLP1-6BC	250A, incl. 6 Bridge Clamps	1SEP101891R0002	1,8
XLP1-6M10	250A, incl. 6 x M10 bolts	1SEP101891R0004	1,8
XLP1-EFM-6BC	250A, incl. Electronic Fuse Monitoring and 6 Bridge Clamps	1SEP101891R0012	1,97

Ordering information
XLP 3-pole

XLP1

Type	Item Description	Order code	Weight (Kg)
XLP1-A60/85-B-3BC-below	250A, incl. A60/85 adapter and 3 Bridge Clamps, cable below	1SEP101918R0001	2,47
XLP1-A60/85-A-3BC-above	250A, incl. A60/85 adapter and 3 Bridge Clamps, cable above	1SEP101919R0001	2,47
XLP1-A40/120-A-3BC-above	250A, incl. A40/120 adapter and 3 Bridge Clamps, cable above	1SEP101912R0002	2,8
XLP1-A40/120-A-3M10-above	250A, incl. A40/120 adapter and 3xM10x20mm bolts, cable above	1SEP101912R0004	2,75
XUP1	250A Fuse Base without clamps or bolts	1SEP101895R0001	1,1
XUP1-6BC	250A, Fuse Base incl. 6 Bridge Clamps	1SEP101895R0002	1,3
XLP2			
XLP2	400A without clamps or bolts	1SEP101892R0001	2,5
XLP2-6BC	400A, incl. 6 Bridge Clamps	1SEP101892R0002	3,02
XLP2-EFM-6BC	400A, incl. Electronic Fuse Monitoring and 6 Bridge Clamps	1SEP101892R0012	3,2
XLP2-A60/120-A-above	400A, incl. A60/120 adapter, cable above without clamps or bolts	1SEP102285R0001	4,9
XLP2-A60/120-B-below	400A, incl. A60/120 adapter, cable below without clamps or bolts	1SEP102286R0001	4,9
XUP2	400A, Fuse Base without clamps or bolts	1SEP101974R0001	
XLP3			
XLP3	630A without clamps or bolts	1SEP101975R0001	3,7
XLP3-6BC	630A, incl. 6 Bridge Clamps	1SEP101975R0002	4,25
XLP3-EFM-6BC	630A, incl. Electronic Fuse Monitoring and 6 Bridge Clamps	1SEP101975R0012	4,4
XLP3-A60/120-A-above	630A, incl. A60/120 adapter, cable above without clamps or bolts	1SEP102287R0001	7,4
XLP3-A60/120-B-below	630A, incl. A60/120 adapter, cable below without clamps or bolts	1SEP102288R0001	7,4

XLP2

XLP3

Ordering information
XLP 1- and 2-pole

XLP_-1P

XLP_-2P

Type	Item Description	Order code	Weight (Kg)
1-pole			
XLP00-1P	160A without clamps or bolts	1SEP600113R0001	0,24
XLP00-1P-2BC	160A, incl. 2 Bridge Clamps	1SEP600113R0002	0,28
XLP00-1P-2M8	160A, incl. 2 x M8 bolts	1SEP600113R0003	0,26
XLP1-1P	250A without clamps or bolts	1SEP600116R0001	0,70
XLP1-1P-2BC	250A, incl. 2 Bridge Clamps	1SEP600116R0002	0,82
XLP1-1P-M10	250A, incl. M10 bolts	1SEP600116R0003	0,76
XLP2-1P	400A without clamps or bolts	1SEP600122R0001	1,06
XLP2-1P-2BC	400A, incl. 2 Bridge Clamps	1SEP600122R0002	1,25
XLP3-1P	630A without clamps or bolts	1SEP600126R0001	1,87
XLP3-1P-2BC	630A, incl. 2 Bridge Clamps	1SEP600126R0002	2,20
2-pole			
XLP00-2P	160A without clamps or bolts	1SEP600114R0001	0,53
XLP00-2P-4BC	160A, incl. 4 Bridge Clamps	1SEP600114R0002	0,61
XLP00-2P-4M8	160A, incl. 4 x M8 bolts	1SEP600114R0003	0,57
XLP1-2P	250A without clamps or bolts	1SEP600117R0001	1,63
XLP1-2P-4BC	250A, incl. 4 Bridge Clamps	1SEP600117R0002	1,87
XLP1-2P-4M10	250A, incl. 4 x M10 x 20 bolts	1SEP600117R0003	1,75
XLP2-2P	400A without clamps or bolts	1SEP600123R0001	2,32
XLP2-2P-4BC	400A, incl. 4 Bridge Clamps	1SEP600123R0002	2,7
XLP3-2P	630A without clamps or bolts	1SEP600127R0001	3,95
XLP3-2P-4BC	630A, incl. 4 Bridge Clamps	1SEP600127R0002	4,5

Ordering information
XLP 4-pole

XLP_-4P

Type	Item Description	Order code	Weight (Kg)
4-pole			
XLP00-4P	160A without clamps or bolts	1SEP600115R0001	0,83
XLP00-4P-8BC	160A, incl. 8 Bridge Clamps	1SEP600115R0002	0,99
XLP00-4P-8M8	160A, incl. 8 x M8 bolts	1SEP600115R0003	0,91
XLP1-4P	250A without clamps or bolts	1SEP600119R0001	2,50
XLP1-4P-8BC	250A, incl. 8 Bridge Clamps	1SEP600119R0002	2,98
XLP1-4P-8M10	250A, incl. 8 x M10 x 20 bolts	1SEP600119R0003	2,74
XLP2-4P	400A without clamps or bolts	1SEP600124R0001	3,87
XLP2-4P-8BC	400A, incl. 8 Bridge Clamps	1SEP600124R0002	4,5
XLP3-4P	630A without clamps or bolts	1SEP600128R0001	6,47
XLP3-4P-8BC	630A, incl. 8 Bridge Clamps	1SEP600128R0002	7,5

Ordering tables
Accessories

1

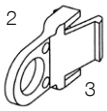

2

3

4

5

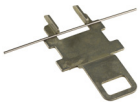

6

7

8

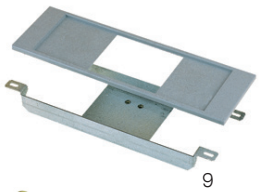

9

10

11

12

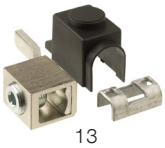

13

Common accessories

	Type	Order code	Weight (Kg)
1	Micro auxilliary switch (not for XLP000)	1SEP407742R0001	0,01
2	Auxiliary switch NC	1SEP407742R0002	0,02
	Auxiliary switch NO	1SEP407742R0003	0,02
3	Padlock device	1SEP407786R0001	0,005
4	XLP00 Bolt (M8) w/washer, kit including 3 x Bolts M8x16 mm with washer	NHP 400940R0006	0,04
	XLP1 Bolt (M10) w/washer, kit including 3 x Bolts M10x20 mm with washer	NHP 403625R0001	0,09
	XLP2/3 Bolt (M12) w/washer, kit including 3 x Bolts M12x30 mm with washer	NHP 403626R0001	0,18
5	XLP1 Double Prisme Clamp, for cable 2 x 70 - 150mm²	NHP 403631R0002	0,15

Accessories XLP000 - 3-pole

	Type	Order code	Weight (Kg)
	XLP000 Front cover (spare part)	1SEP304222R0001	0,12
	XLP000 Micro auxiliary switch	1SEP408738R0001	0,01
6	XLP000 DIN rail snap on kit - Qty. 1 pc	1SEP407740R0001	0,006
	XLP000 DIN rail snap on kit - Qty. 10 pc	1SEP407740R0010	0,6
7	XLP000 Frontframe for 1 XLP000	1SEP407741R0001	0,02
	XLP000 Frontframe for 2 XLP000	1SEP407741R0002	0,025
	XLP000 Frontframe for 3 XLP000	1SEP407741R0003	0,03

Accessories XLP00 - 3-pole

	Type	Order code	Weight (Kg)
	XLP00 Front cover (spare part)	1SEP101873R0001	0,17
	XLP00 A60/60 Adapter above, for 60 mm busbar distance, 5 or 10 mm, cable above	1SEP101910R0001	0,38
	XLP00 A60/60 Adapter below, for 60 mm busbar distance, 5 or 10 mm, cable below	1SEP101915R0001	0,38
	XLP00 A40/75 Adapter above/below, for 40 mm busbarsystem Striebel & John, cable above or below	1SEP101909R0001	
	XLP00 A40/120 Adapter above/below, for 40 mm busbarsystem Striebel & John, cable above or below	1SEP101909R0002	
	XLP00 Front cover with EFM (Electronic Fuse Monitoring)	1SEP101873R0007	0,09
9	XLP00 Front fixing bracket with front frame	1SEP201534R0001	
7	XLP00 Frontframe for 1 XLP00	1SEP407792R0001	0,02
	XLP00 Frontframe for 2 XLP00	1SEP407792R0002	0,03
	XLP00 Frontframe for 3 XLP00	1SEP407792R0003	0,04
	XLP00 ABB-INS Frontframe for 1 XLP00	1SEP407792R0004	0,02
	XLP00 ABB-INS Frontframe for 2 XLP00	1SEP407792R0005	0,03
8	XLP00 Cable shroud	1SEP407793R0001	0,03
	XLP00 Snap for double DIN rail	1SEP407897R0001	0,24
10	XLP00 Bridge Clamp (3-BC), for cable 1,5 - 50mm²	1SEP407733R0001	0,04
11	XLP00 Triple Clamp (3-TC), for cable 1,0 - 10mm²	1SEP407787R0001	0,15
12	XLP00 Single Pris.Clamp (3-SPC), for cable 1,5 - 70mm²	1SEP407732R0001	0,09
13	XLP00 Feeding Clamp (3-FC), for cable 25 - 95 mm²	1SEP407811R0001	0,29

Ordering tables
Accessories

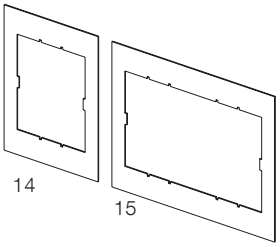

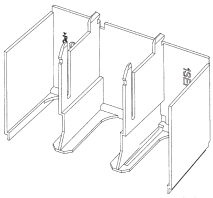

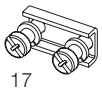

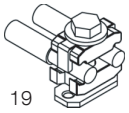

	Type	Order code	Weight (Kg)
	Accessories XLP1 - 3-pole		
	XLP1 Front cover (spare part)	1SEP101883R0001	0,5
	XLP1 A60/85 Adapter above, 60mm busbar distance, 5 or 10mm cable, above	1SEP201451R0001	0,74
	XLP1 A60/85 Adapter below, 60mm busbar distance, 5 or 10mm cable, below	1SEP201456R0001	0,74
	XLP1 Front cover with EFM (Electronic Fuse Monitoring)	1SEP101883R0007	0,37
14	XLP1 Frontframe for 1 XLP1	1SEP407815R0001	0,04
15	XLP1 Frontframe for 2 XLP1	1SEP407815R0002	0,06
16	XLP1 Cable shroud	1SEP407793R0002	0,1
17	XLP1 Bridge Clamp (3-BC), for cable 16 - 95mm²	1SEP407733R0002	0,11
18	XLP1 Single Prisme Clamp (3-SPC) , for cable 16-185mm²	1SEP407732R0002	0,17
	Accessories XLP2/3 - 3-pole		
	XLP2 Front cover (spare part)	1SEP101982R0001	0,65
14	XLP2 Frontframe for 1 XLP2	1SEP407951R0001	0,04
15	XLP2 Frontframe for 2 XLP2	1SEP407951R0002	0,06
	XLP2 Front cover with EFM (Electronic Fuse Monitoring)	1SEP101982R0007	0,25
	XLP3 Front cover (spare part)	1SEP101984R0001	0,9
	XLP3 Frontframe for 1 XLP3	1SEP407955R0001	0,055
	XLP3 Front cover with EFM (Electronic Fuse Monitoring)	1SEP101984R0007	0,35
16	XLP2/3 Cable shroud	1SEP407952R0001	0,18
17	XLP2/3 Bridge Clamp (3-BC), for cable 35 - 300mm²	1SEP407953R0001	0,26
18	XLP2/3 Single Pris. Clamp (3-SPC), for cable 25 - 240mm²	1SEP407954R0001	0,5
19	XLP2/3 Double Pris. Clamp (3-DPC), for cable 2 x 35 - 150mm² (sm)	1SEP407956R0001	0,36
	SF-60 Busbar system		
20	Busbar carrier 3-pole, for busbar 5-10 x 10-30mm	GHV 240849R0001	0,17
	Cable connection supply module, for busbar 5-10 x 10-30mm or cable 35 - 120mm²	GHV 240849R0034	0,62

Ordering tables
Accessories XLP 1-, 2- and 4-pole

Type	Order code	Weight (Kg)
XLP00-1P Cable Shroud For 1- and 2-Pole and N at the 4-Pole	1SEP618708R0001	0,02
XLP1-1P Cable Shroud For 1- and 2-Pole and N at the 4-Pole	1SEP618709R0001	0,07
XLP2/3-1P Cable Shroud For 1- and 2-Pole and N at the 4-Pole	1SEP618710R0001	0,13
XLP00 Triple Clamp (1-TC) 1,0-10mm2	1SEP407787R0010	0,08
XLP00 Single Pris.Clamp (1-SPC) 1,5-70mm2	1SEP407732R0010	0,05
XLP1 Single Pris.Clamp (1-SPC) 16-185mm2	1SEP407732R0011	0,09
XLP23 Sing.Pris.Clamp (1-SPC) 25-240mm2	1SEP407954R0010	0,25
XLP23 Dou.Pris.Clamp (1-DPC) 35-185mm2	1SEP407956R0010	0,35
XLP00 1P Front Frame f/1 Apparatus	1SEP407792R0011	0,01
XLP00 1P Front Fr. f/2 1P, f/1 2P Apparatus	1SEP407792R0012	0,02
XLP00 4P Front Frame f/1 Apparatus	1SEP407792R0041	0,02
XLP00 4P Front Frame f/2 Apparatus	1SEP407792R0042	0,04
XLP00 4P Front Frame f/3 Apparatus	1SEP407792R0043	0,05
XLP1 1P Front Frame f/1 Apparatus	1SEP407815R0011	0,03
XLP1 1P Front Fr. f/2 1P, f/1 2P Apparatus	1SEP407815R0012	0,04
XLP1 4P Front Frame f/1 Apparatus	1SEP407815R0041	0,05
XLP1 4P Front Frame f/2 Apparatus	1SEP407815R0042	0,07
XLP2 1P Front Frame f/1 Apparatus	1SEP407951R0011	0,28
XLP2 1P Front Fr. f/2 1P, f/1 2P Apparatus	1SEP407951R0012	0,32
XLP2 4P Front Frame f/1 Apparatus	1SEP407951R0041	0,48
XLP3 1P Front Frame f/1 Apparatus	1SEP407955R0011	0,04
XLP3 2P Front Frame f/1 Apparatus	1SEP407955R0021	0,05
XLP3 4P Front Frame f/1 Apparatus	1SEP407955R0041	0,07

Dimensional drawings
XLP000

XLP000

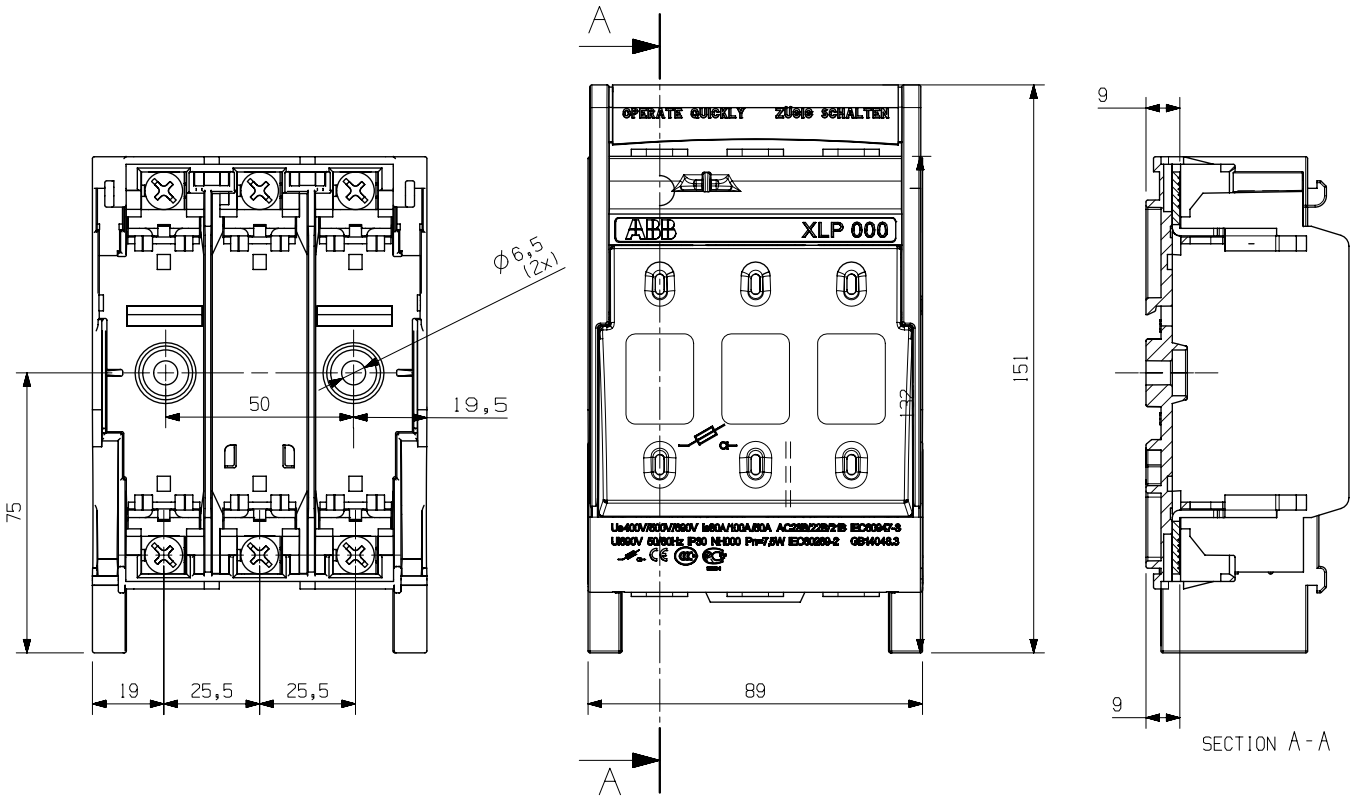

1SEB000001

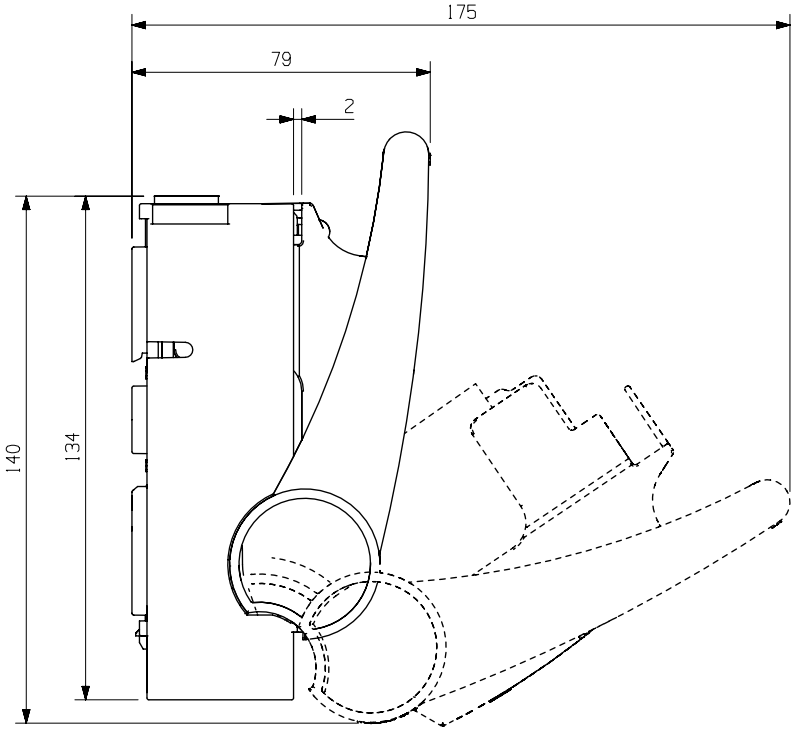

10

Dimensional drawings
XLP00 and XLP1

XLP00

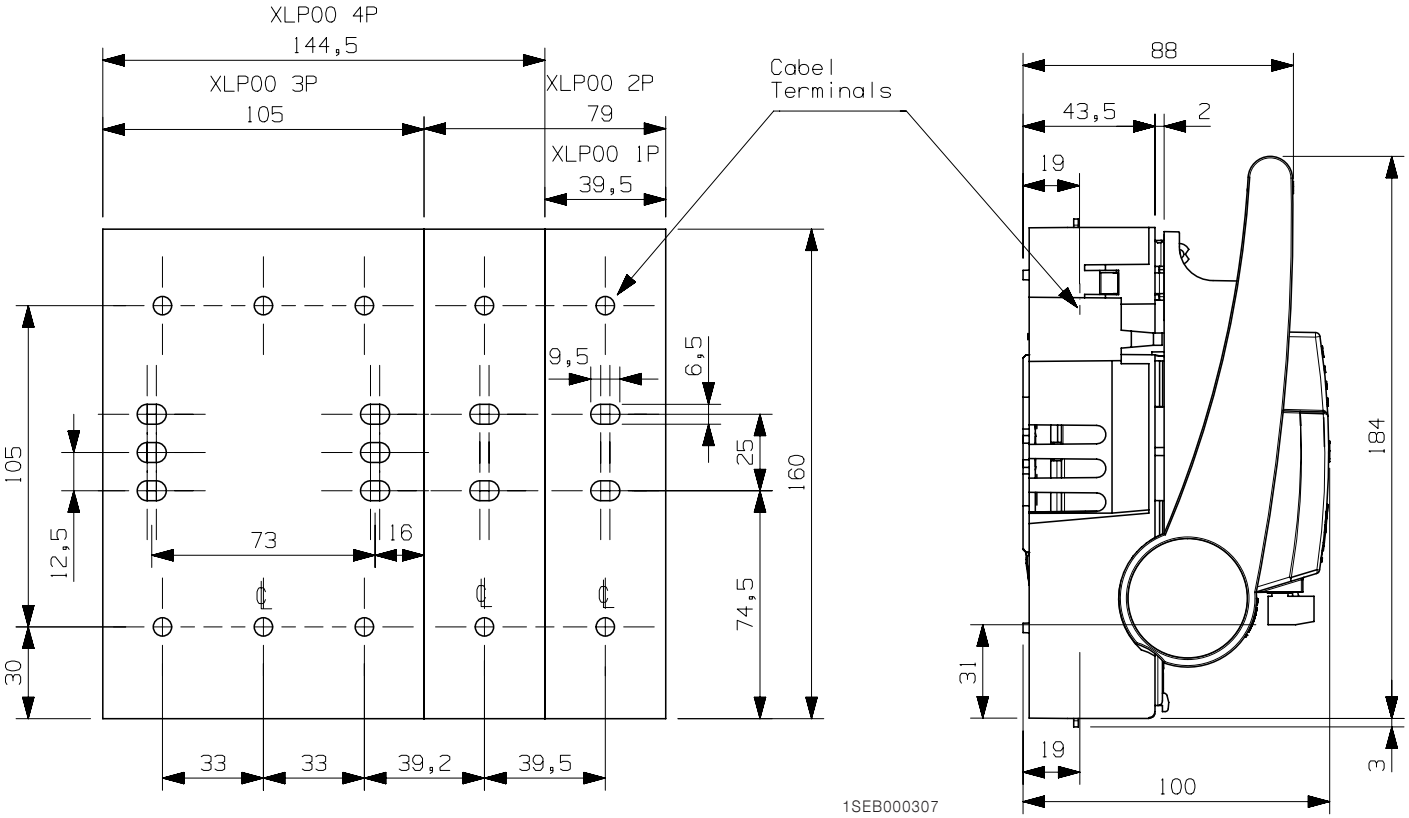

XLP1

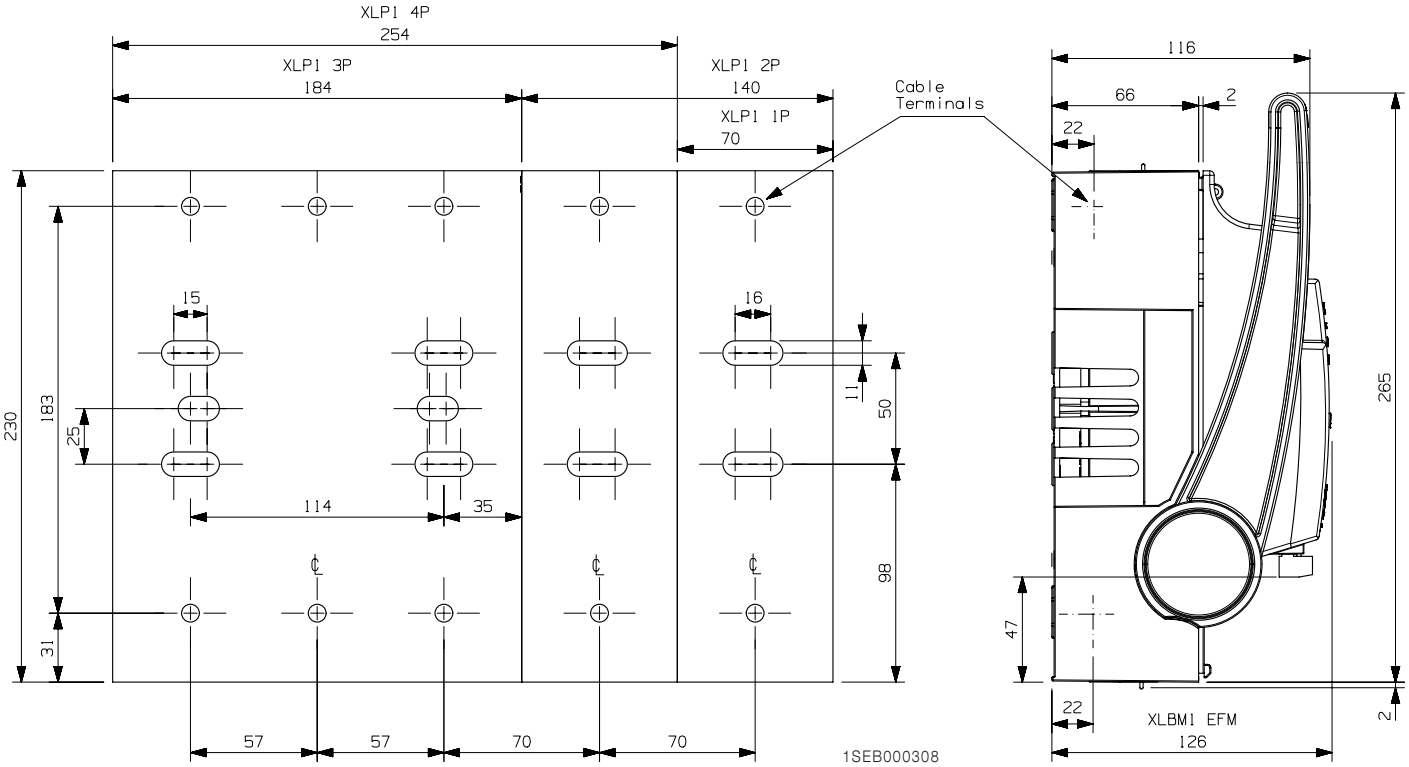

1SEB000311

Dimensional drawings
XLP2 and XLP3

XLP2

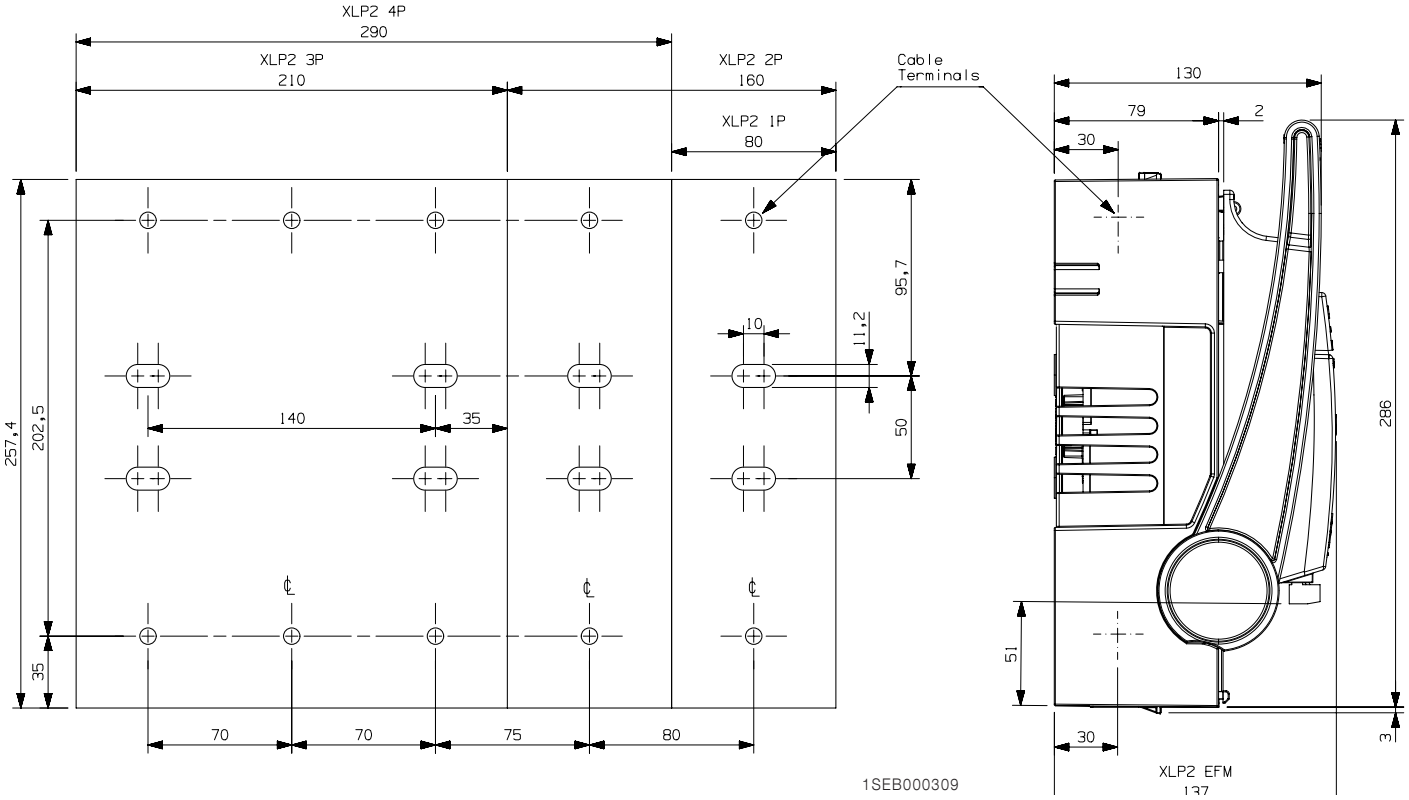

XLP3

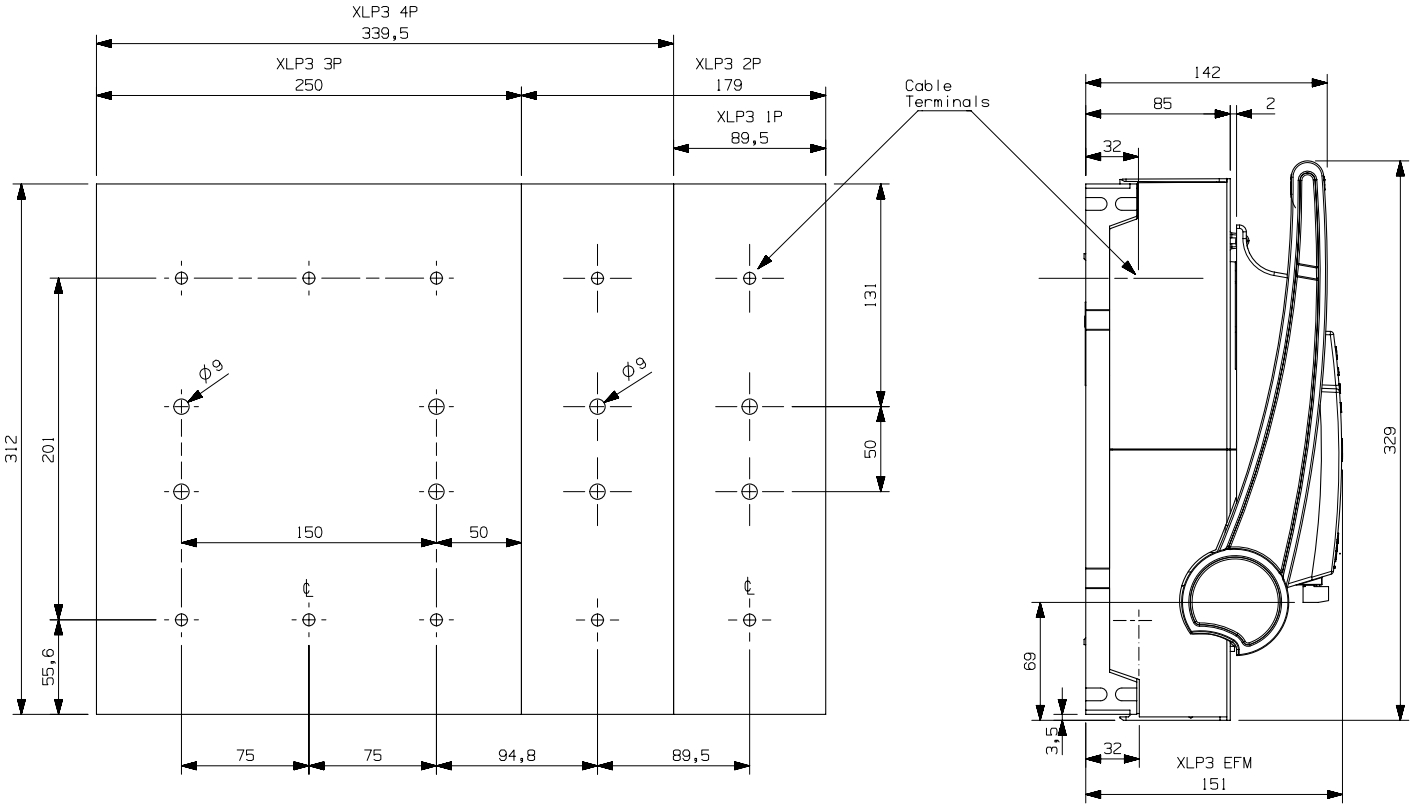

10

Dimensional drawings
Busbar Adapters XLP00

XLP00 – A40/75

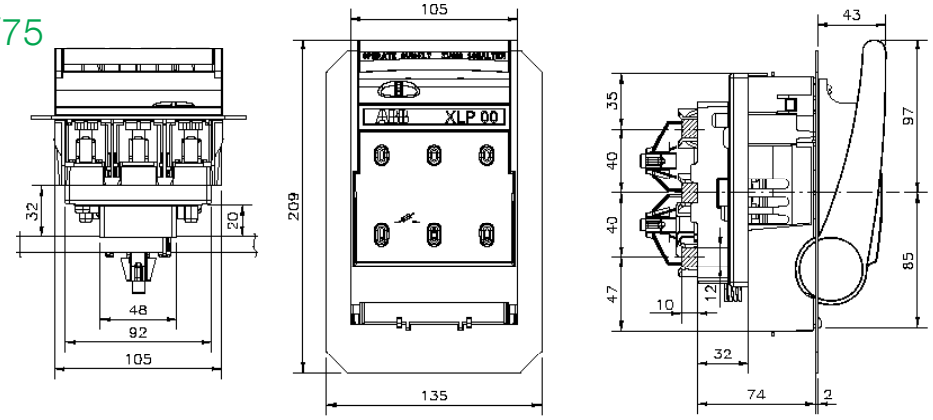

1SEB000006

XLP00 – A40/95

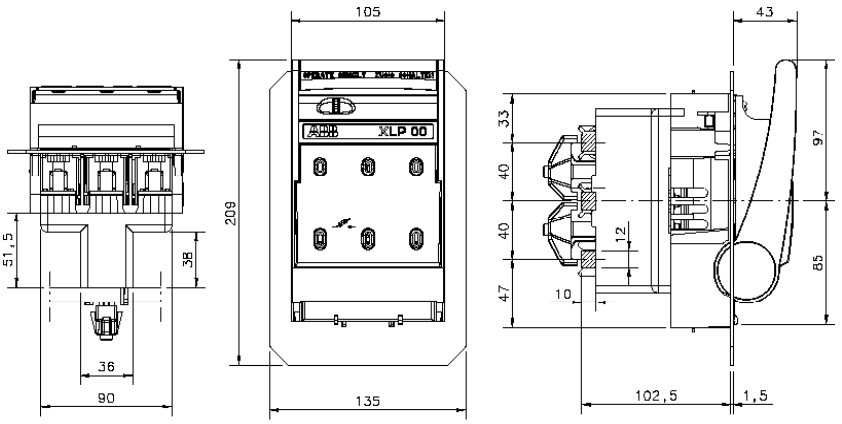

1SEB000117

XLP00 – A40/120

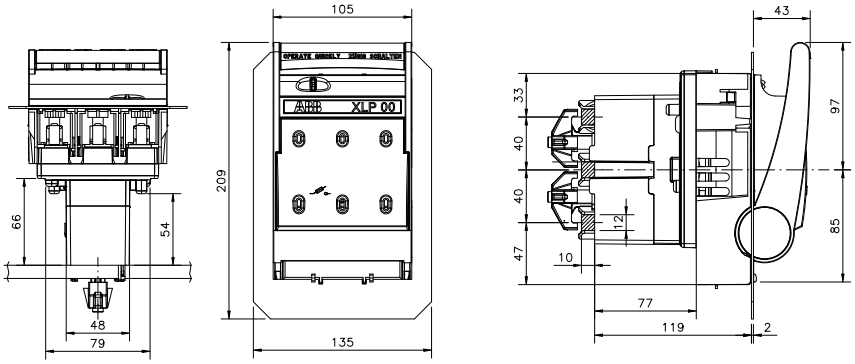

1SEB000005

XLP00 – A60/60

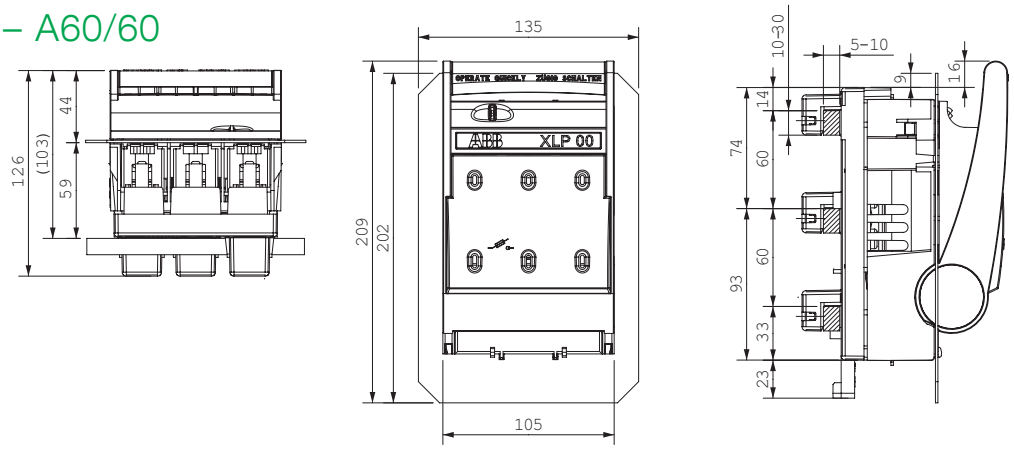

1SEB000007

10

Dimensional drawings
Busbar Adapters XLP1

XLP1 – A60/85

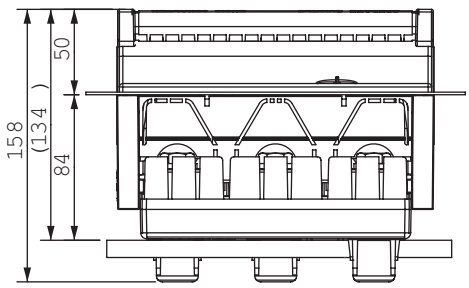

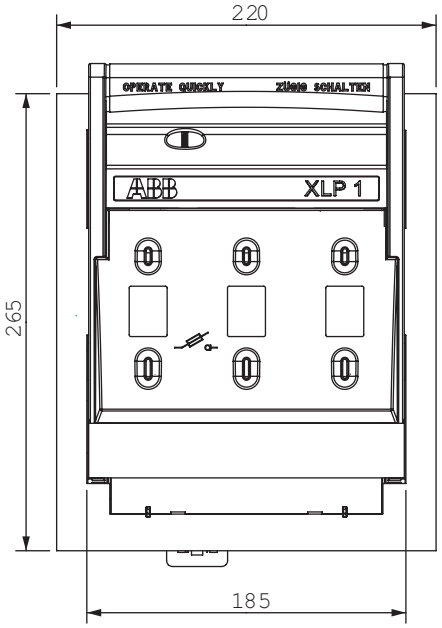

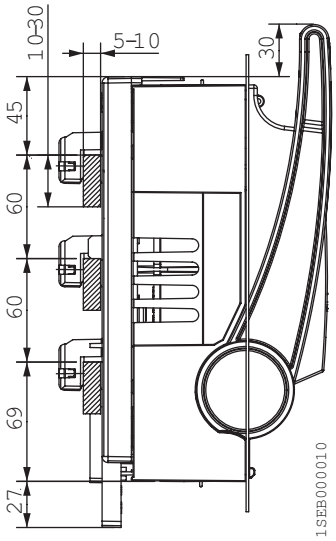

XLP1 – A40/120

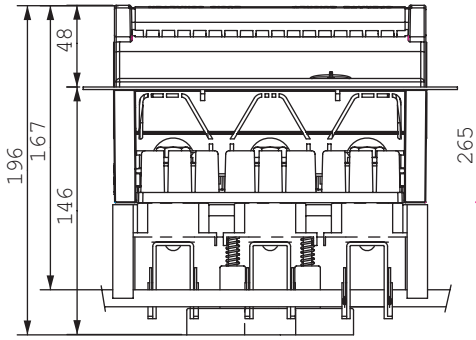

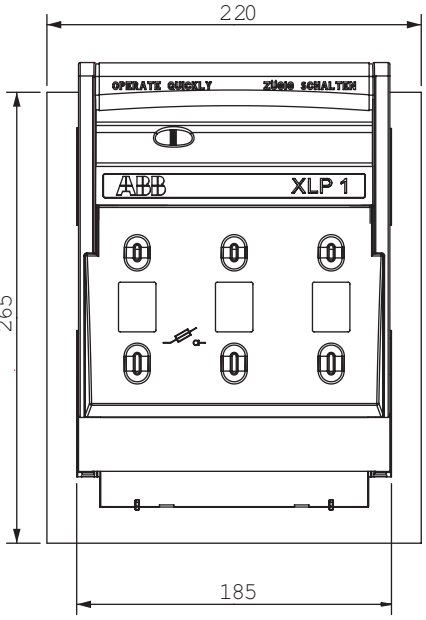

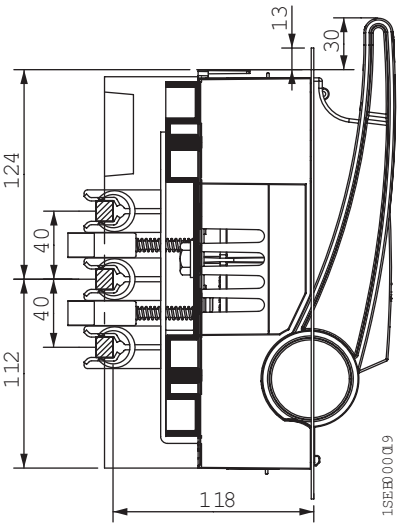

10

Dimensional drawings
Busbar Adapters XLP2 and XLP3

XLP2 – A60/120

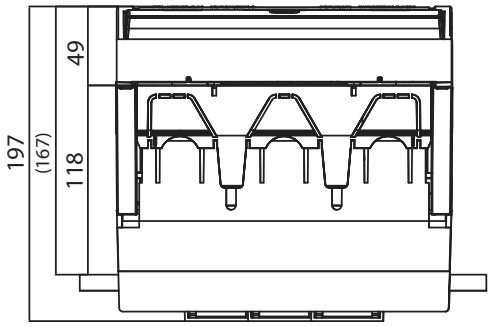

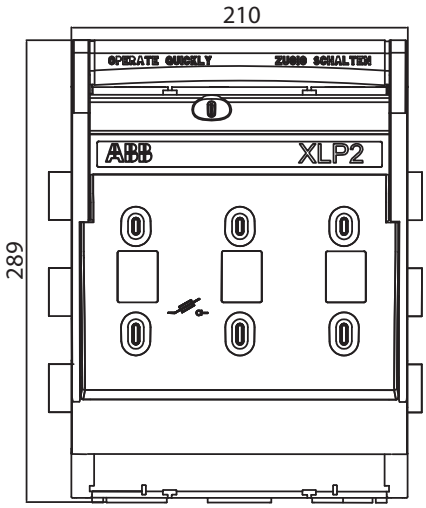

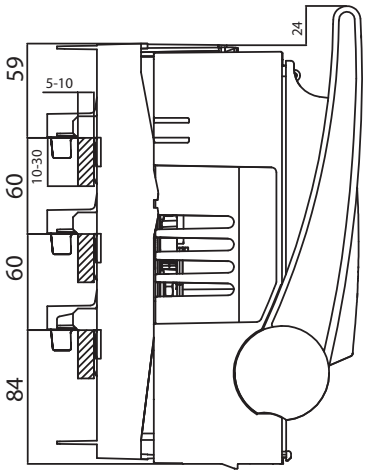

XLP3 – A60/120

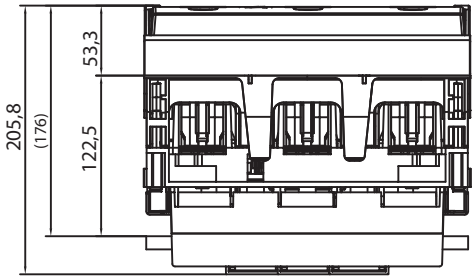

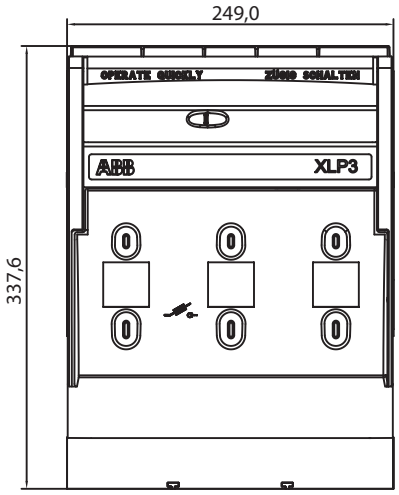

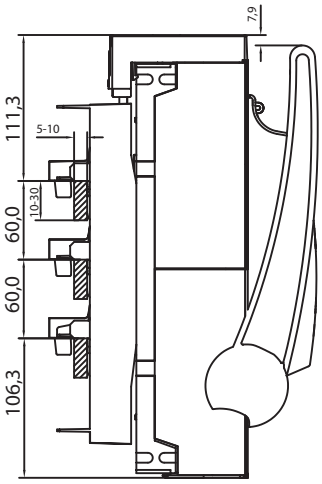

XLP3 A60/120 Below

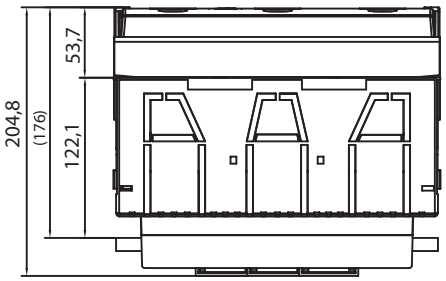

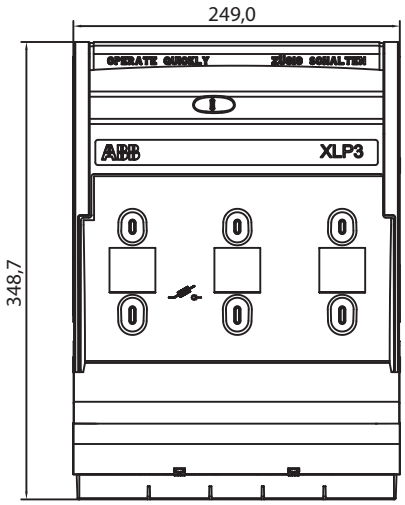

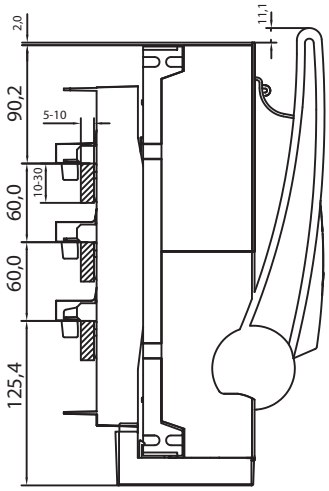

XLP3 A60/120 Above

10

Dimensional drawings
Front frames

XLP000

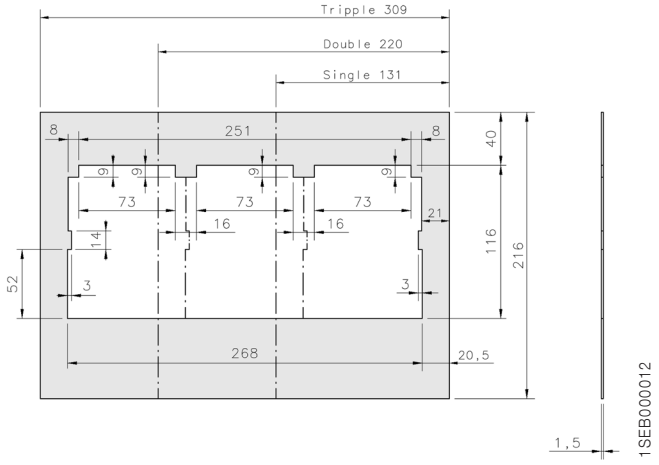

XLP00

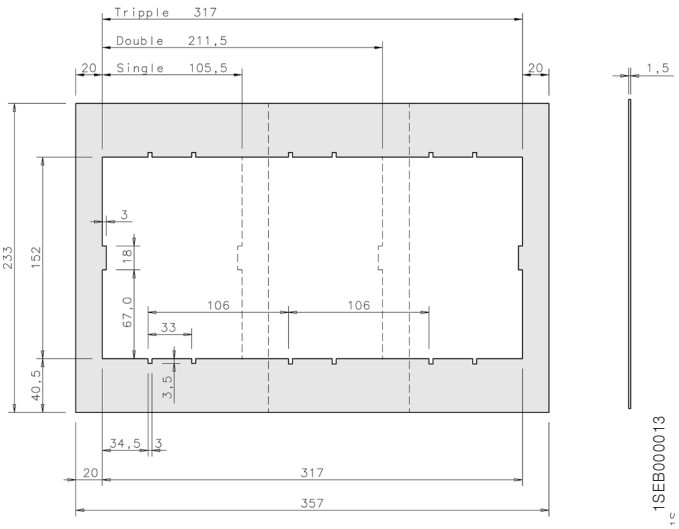

XLP1

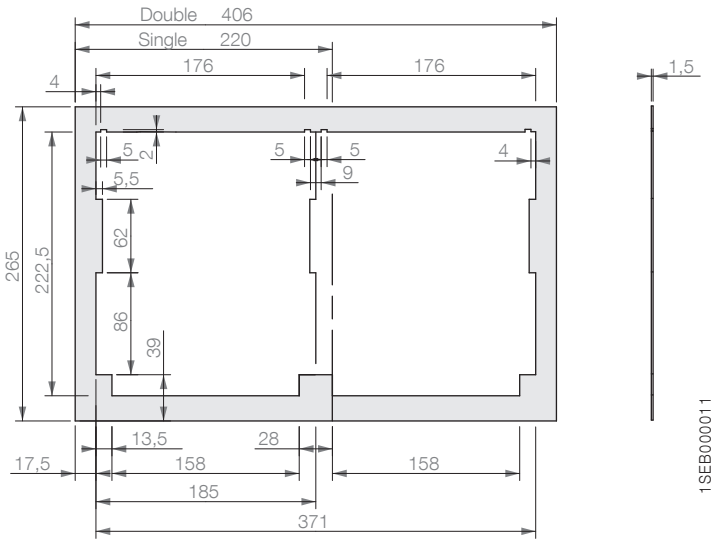

XLP2

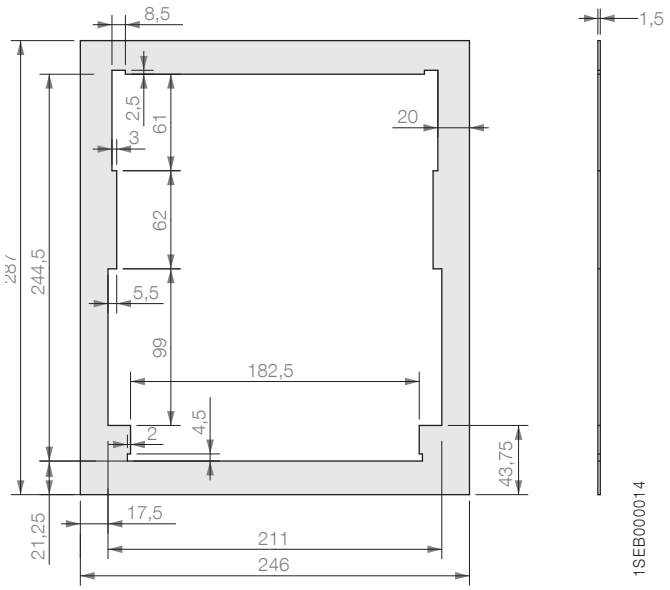

XLP3

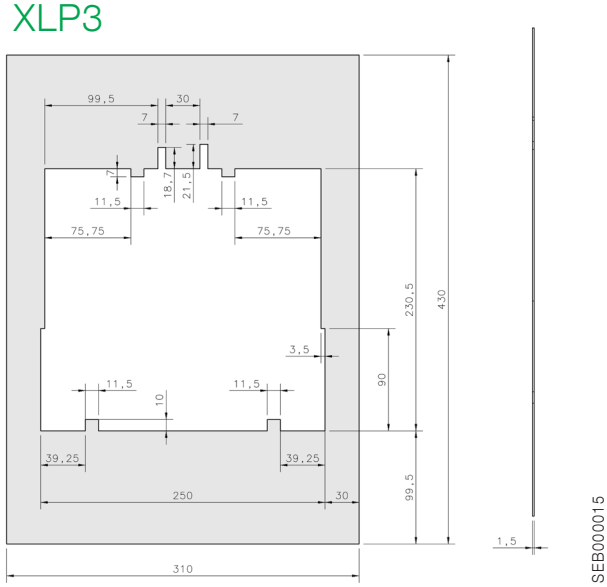

10

Contact us

ABB AS
Low Voltage Products
P.O.Box 100, Sentrum
N-3701 Skien, Norway

http://new.abb.com/low-voltage

Note: We reserve the right to make technical changes or modify the contents of this document without prior notice. With regard to purchase orders, the agreed particulars shall prevail. ABB AS does not accept any responsibility whatsoever for potential errors or possible lack of information in this document.

We reserve all rights in this document and in the subject matter and illustrations contained therein. Any reproduction, disclosure to third parties or utilization of its contents – in whole or in parts – is forbidden without prior written consent of ABB AS.

Copyright © 2016 ABB
All rights reserved

© Copyright ABB. 1SEC312011B0202 - 2016.02

Power and productivity
for a better world™