REVISIONS					
REV	ACTION	DRAWN	CHECKED	APPROVED	DATE
AD	D20353	KASTNER	KASTNER	BUSHNELL	07/02/14
AB	D17301	KASTNER	KASTNER	BUSHNELL	05/07/13
AC	D19301	KASTNER	KASTNER	BUSHNELL	06/08/24

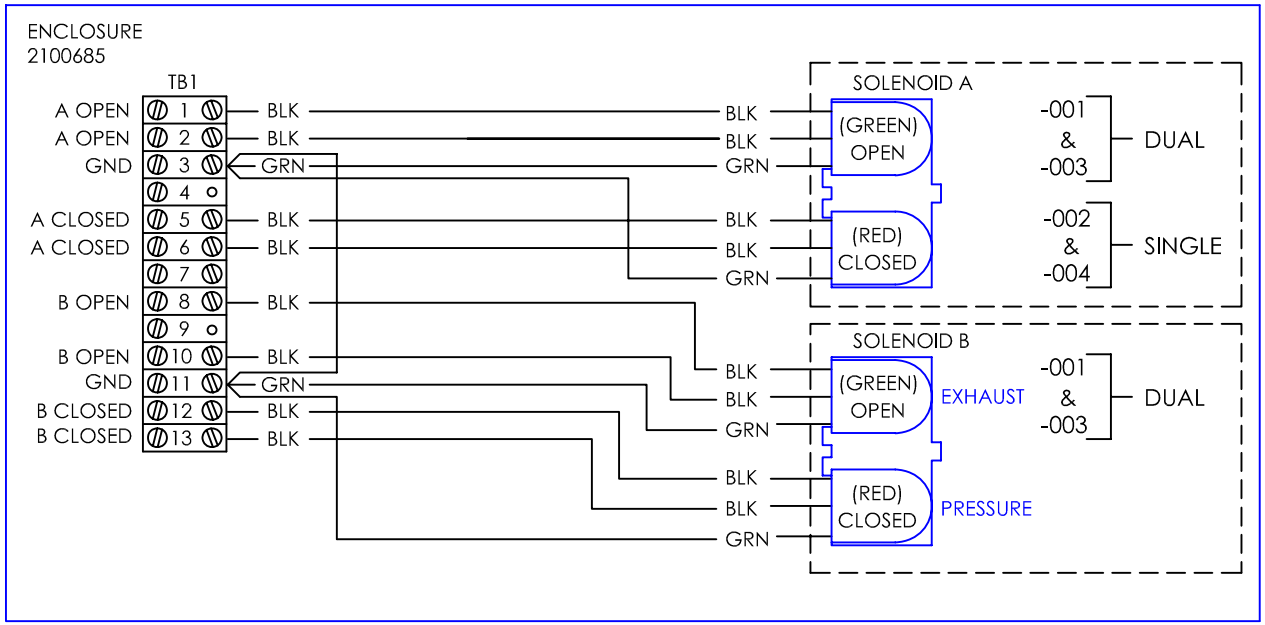

ASSEMBLY/QUANTITY	ITEM NO.	PART NUMBER	DESCRIPTION	REF/ZONE DESIG MATERIAL	UNIT MEAS
001					

DO NOT SCALE DRAWING

THIRD ANGLE PROJECTION

UNLESS OTHERWISE SPECIFIED
DIMENSIONS ARE IN INCHES
TOLERANCES ARE:
DECIMAL .XX ± -- .XXX ± ---
ANGULAR ± --
BREAK ALL SHARP CORNERS AND EDGES
DIMENSIONS APPLY BEFORE FINISH

PRODUCT LINE	TOTALFLOW ®	LEVEL	3
DESIGN	BERRY	DATE	02/02/01
DRAWN	TIERNEY		02/02/05
CHECKED	TIERNEY		02/02/05
APPROVED	HOLLAND		02/02/05

ABB TOTALFLOW Products

TITLE
WIRING INTERCONNECT
VERSA VALVE TO TB1
WI

SCALE	SIZE	DOC TYPE	DRAWING NO.	REV	SHEET
1/1	B	WI	2100721	AD	1 OF 1