Offprint of article published in Praxis Profiline IEC 61850
Third edition, August 2008

Hands-On

Experience with IEC 61850 based

... Substation Automation Systems

The high acceptance of IEC 61850 resulted in the implementation of a large number of compliant SA systems. The vast amount of experience gained allows exploiting the benefits of the standard to the best advantage of customers.

Klaus-Peter Brand
Petra Reinhardt

Dr. Klaus-Peter Brand
is working at the ABB University Switzerland as teacher and consultant. Since 1995, he is a member of the WG 10 of IEC TC57 defining the standard IEC 61850. For the Edition 1, he was acting as editor and co-editor for different parts thereof. He is engaged as expert in the maintenance and extension of the standard and now for Edition 2 again as member in the editors group.
www.abb.com/substationautomation

Petra Reinhardt
is working as Marketing Communications Manager with ABB Switzerland Ltd., Power Systems, Baden/Switzerland after having gained several years experience in substation automation and protection in Switzerland and South Africa where she has been working as sales engineer and key account manager.
www.abb.com/substationautomation

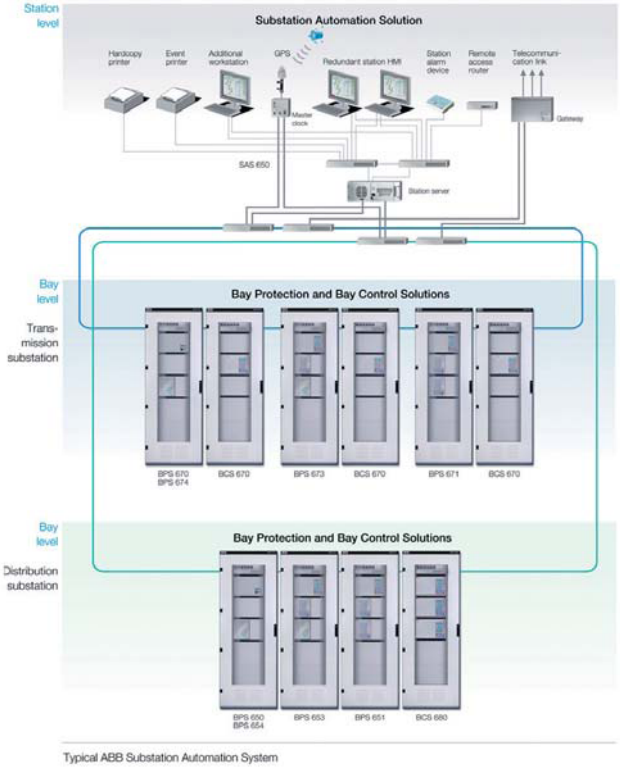

Figure 1 – Example of a SA architecture with one ring for each of the two voltage levels of a substation

Since its publication in 2004, the standard IEC 61850 has been accepted by utilities around the globe at an unexpectedly fast rate. It has now made its way into nearly all specifications for substation automation (SA) systems (Figure 1). Currently, the application domains are being extended to communications between substations (teleprotection and other functions) as well as to network control centers. With the publication of the new parts covering control and monitoring of wind and hydro power plants, the standard embraces the power generation domain as well. A part for distributed energy resources will follow in the near future. Edition 2 of the so-called base standard is being elaborated and it is scheduled to be released in 2009. The fast development and immense success of the standard also has a big impact on companies like ABB being both a supplier of products and a system integrator. Since the commissioning of the world's first multi-vendor SA system at EGL's 380kV Laufenburg substation in December 2004, hundreds of substation automation systems have already been delivered and a vast amount of experience has been gathered with new installations, retrofit and migration projects.

Some experience with products and system components

Initially, projects were realized with existing devices being upgraded to IEC 61850 either directly or with the help of external converters. This conversion not only involves a change of the coding of telegrams running over the wire or fiber, but also the mapping of legacy data to the object-oriented data model of IEC 61850. In addition, even the best conversion from a slower legacy protocol to the 100 Mbit/s of IEC 61850 has some performance limits by definition, e.g. for fast GOOSE (Generic Object Oriented Substation Event) messages. Therefore, ABB's new intelligent electronic devices (IEDs) are entirely based on IEC 61850, i.e. they provide all data according to the data model and support all applicable services, especially the fast GOOSE messaging.

Being multifunctional devices, the 670 series IEDs (Figure 2) provide a vast amount of control and complex protection functions to cover the needs in the transmission area. The functions may be initialized in almost every combination, also for multiple bays. This versatility paves the way for new and cost-efficient concepts in the substation domain. These principles of combined resp. multi-object protection and control are described in the Basic part of this journal under the headline "Designing next generation protection systems".

This device capability is supported by the concept of free allocation of functions as formulated in IEC 61850. The IED is also prepared for the future implementation of a redundant station bus as planned in the standard and for the application of a process bus according to IEC 61850.

REF 615 (Figure 3) is a dedicated feeder protection relay perfectly designed for the control, protection, measurement and supervision of a utility's distribution substations as well as industrial power systems. The relay has been developed to unleash the full potential of the IEC 61850 standard for communication and interoperability of substation automation devices. The IEC 61850 implementation in REF615 also includes fast horizontal relay-to-relay communication over the station bus using the GOOSE communication service. This enables the REF 615 relays of incoming and outgoing feeders of a substation to co-operate and form e.g. a stable, reliable and high-speed reverse blocking based busbar protection. Another example of the many additional functions facilitated by GOOSE messages is the collection of data from three remote sensors for arc protection. Further IEDs will extend the range of applications. Featuring full hardware and software modularity, both above IEDs support the design of completely tailor-made solutions for customers not just from scratch, but from well defined and tested modules on IED level.

Moreover, ABB's station HMIs and computers as well as RTUs and gateways fully support the IEC 61850 standard, creating a complete product portfolio to build substation automation systems for even the most demanding customer requirements.

High potential of GOOSE messages for applications

By defining the data model for each function and each IED hosting these functions, the standard enables interoperability between IEDs in different system architectures. This model includes all data with their attributes as well as the services for the data exchange. As long as station HMIs and gateways communicate with IEDs in a non-time-critical way (transfer times ≤1 s), client-server services like control and reporting based on the seven layers of the ISO/OSI model are used. Event-driven time-critical communications (transfer times ≤ 10 ms) between IEDs for starts, trips, blocks, releases and a few analog data transfers employ the GOOSE service, a publisher-subscriber communication based merely on layer 1 and 2 of the ISO/OSI model. Typical for GOOSE messages is their repetition behavior which is only defined by the two time settings t_{min} and t_{max}. Following an event, the GOOSE message is sent immediately and then repeated for the first time after a time interval of t_{min}. The standard does not define how the repetition intervals are increased to t_{max}. The original idea was to consistently increment the repetition time interval by a factor of 2. But what is the actual use of the fourth trip repetition after an accumulated time delay of 30 ms? It has been proven that by two repetitions with time intervals of t_{min} (e.g. 2 ms) and a subsequent direct increase to t_{max} (e.g. 1 s) for further repetitions lasting up to the next event, the highest safety class according to IEC 61508 may be reached, e.g. for interlocking. GOOSE messages can potentially replace all wires and contacts between IEDs. Each sender is perfectly supervised by the receiver(s) based on the known t_{max} of all related senders. The GOOSE messages are priority-tagged like other messages in IEC 61850 to warrant critical transmission times also for dedicated signals. Our experience has shown that the use of both IEDs and switches with sufficiently large input buffers ensures that no GOOSE messages are lost before they are processed, i.e. accepted if relevant or discarded if not.

Figure 4 – Example for a GOOSE-based function: Arc detection by REF615

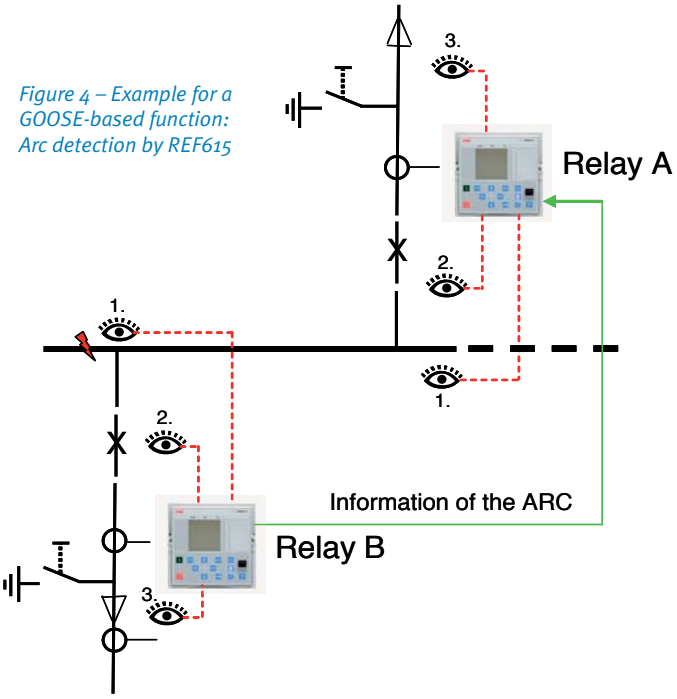

With all these properties, GOOSE messages have a great potential for the realization of distributed functions in simple to even the most complex substation topologies. ABB taps this potential for customers wanting to have such proven and innovative functions implemented in their SA systems. Apart from savings in wiring, GOOSE-based functions offer flexibility for adaptation to changing requirements, substation topologies, etc.

Typical functions which can be realized by GOOSE instead of hard-wiring are listed below. The typical signal transmitted by the GOOSE message is given in *Italic*:

- 1 out of N blocking for switchgear control – *attribute "selected"*
- Interlocking – *all or only relevant switchgear positions*
- Reverse blocking for selective tripping in radial networks or for simple busbar protection schemes – *"start" indications*
- Breaker failure protection (BFP) – *trip of trip release to the neighboring breaker(s)*
- Fault arc protection – *"arc detected" and the related trip*
- Triggering of disturbance recording – *transmission of events like "start" indication from protection function*
- Decentralized voltage and frequency load shedding – *trip*

Figure 2
Example: 670 series IED for transmission

Figure 3
Example: 615 series IED for distribution

signals

- Automatic restoration after load shedding – *close commands*
- Automatic adjustment of protection setting group according to system state e.g. according to the switched control of capacitor banks – *signal for setting group change or the number of the setting group to be switched to*
- Voltage regulation of parallel transformers by the master-follower principle – *tap change*

Most of these functions are not only needed on the transmission level (670 series IEDs) but also on the distribution level (REF 615). An example for such a function using GOOSE as provided by REF 615 is shown in Figure 4. The future will bring many more distributed functions that can be realized with this service.

Architectures

The communication services of IEC 61850 are mapped to the selected mainstream communication stack composed of MMS, TCP/IP and Ethernet. Functions, functional requirements and the abstract services determine the structure of any IEC 61850 SA system.

Ethernet, comprising the two lowest layers of the communication stack, forms the basis of the physical communication architecture. It should be noted that IEC 61850 stipulates switched Ethernet with priority tagging and a speed of 100 Mbit/s for the IED ports. The switches are not yet "conformant IEDs" (new work item proposal for IEC Technical Committee (TC) 57 under preparation). Therefore, higher speeds between switches are not violating the standard. The most commonly used architecture is the optical Ethernet ring, e.g. with one switch per bay connecting the bay level IEDs to the system. This ring is operated openly as tree and is self-healing in case of a ring failure. In the event of a loss of a switch, only the communication with the affected bay is interrupted.

In practice, there are two types of ring architectures or a combination of these applied in projects. The main drivers for the correct selection are the physical location of the IEDs and the distances between the IEDs themselves and to the station level equipment.

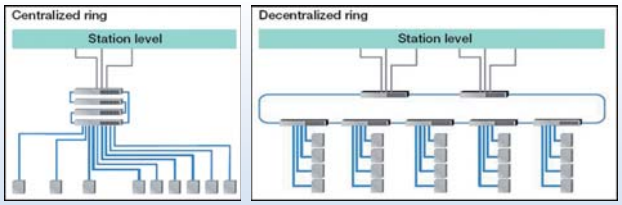

Figure 5 – Ethernet topologies:
a) Centralized ring b) Decentralized ring

The centralized ring architecture (Figure 5a) is designed for substations with many bay level IEDs located within a short distance from the central control room. Switches with a large number of Ethernet ports for the IEDs are interconnected in a ring configuration and housed in one or several communication panels. These dedicated panels are typically located in the control room and allow the communication backbone to be treated as an independent entity offering easy maintenance access without the need to touch any bay level IEDs.

The decentralized communication architecture (Figure 5b) is most suited to physically large substations or switchyards with long distances to cubicles or kiosks housing the bay level IEDs. Small dedicated switches or sets of switches are installed close to the IEDs and form a ring with the station level switches in the control room. This solution requires only two optic fibers between the levels and, especially in these long links, eliminates single points of failure owing to its ring redundancy.

Both for performance and availability reasons, the communication system may be designed with interconnected multiple rings. Solutions may comprise e.g. one ring per voltage level (Figure 1), or one ring for protection and another one for control IEDs, or one ring for main 1 and another for main 2 protection, or one ring for certain functional groups. The design criteria should essentially be the expected failure scenarios.

Star-type connections in turn are single points of failure and may be applied only as redundant stars, which do, however, necessitate IEDs with redundant communication ports.

To date, there is no redundant network connection (two redundant ports) defined by IEC 61850. Some suppliers are using proprietary solutions. Since such solutions destroy interoperability, ABB prefers to wait for the redundancy concept to be standardized in IEC 61850 which is expected as draft by end of this year and as an amendment in 2009. This position will finally be to the benefit of both suppliers/system integrators and customers in order to arrive at a solution which fully supports interoperability and allows easy maintenance also in the future.

Substations or SA systems, respectively, are mostly operated from the remote Network Control Center. Therefore, there is at least one gateway at station level. To increase the system availability and comply with requirements regarding the avoidance of single points of failure, redundant gateways are used. These gateways are converting IEC 61850 to the requested telecontrol protocol, e.g. to the very common IEC 60870-5-101/104, for as long as a direct IEC 61850 link is not yet standardized. In addition, the gateway at the boundary of the SA system plays a key role in access authority handling and cyber security.

For local control and monitoring as well as maintenance purposes, most SA systems are equipped with a station computer providing a station level HMI and station-wide database like ABB's MicroSCADA Pro system. Depending on the operational philosophy and failure scenarios, also this equipment may be duplicated to form a hot-standby configuration. A local or remote engineering workplace, e.g. for changing protection settings or evaluating disturbance recorder files, may complement this set-up.

For compact, more centralized SA systems as found e.g. at distribution level, also a modern RTU like ABB's RTU 560 may be applied as gateway providing the protocol conversion from IEC 61850 to the requested telecontrol protocol. In addition, it offers also hardwired binary and analog inputs/outputs as well as a user-friendly, integrated HMI with basic control and monitoring functions.

All station HMIs, gateways and RTUs are clients for the bay protection and control IEDs. Since each client-server connection requires an individual point-to-point association to be established and managed, a certain amount of processing power and memory is needed for any such link. Therefore, not the standard but the implementation in the IEDs sets some upper limits for the number of clients that can be connected. Our experience shows that this number may vary between different products and has to be considered when designing a SA system architecture.

The process bus in pilot installations

Non-conventional instrument transformers (NCIT) are mostly based on non-transformer principles for obtaining voltages or currents. Very popular are Rogowski coils for current or optical measurement principles like the Faraday (current) and Pockels (voltage) effect. NCITs are successfully being field-tested for more than a decade. Their bottleneck is that, instead of the common 1/5 A for current and 110/220 V for voltage, they deliver proprietary signals or messages for the users such as protection IEDs. Therefore, they have not been accepted in the market. The sampled value (SV) service as defined in IEC 61850-9-2 is now the common denominator for all sensing principles. The individual

signals are collected and combined e.g. per bay in the so-called merging unit (MU) which provides the messages according to the standard. For practical purposes, values for free parameters like sampling rate and channel bundling are recommended by the user convention IEC 61850-9-2LE. First pilot installations are in operation. A lot of customers also ask for conversion of the signals from conventional instrument transformers (CIT) to sampled values according to the standard. The last barrier for a general acceptance and use of such solutions are the still missing test procedures of TC38 which, in addition to the well defined message format of IEC 61850-9-2, also have to define the step-response and the frequency-response curve. This work is in progress and results expected in the near future. Process bus architectures are discussed in the Basic part of this issue under the headline "Approach to optimized Process Bus architectures".

Experience with project handling and engineering

Quality assurance

To bridge the gap between compliant and certified products and full systems, ABB has installed a system verification center (SVC) which tests all IED types under consideration in a real system environment. The SVC has also been qualified by UCA International in 2006 to officially verify and certify the compliance of IEDs to IEC 61850.

Experience with Tools

Independent of the manufacturer of the IED to be used, i.e. ABB or a third party supplier, it always has a product configuration tool and – according to the standard – an ICD (IED capability description) file. The grammar of all entries in these description files is defined by the standard. There are mandatory data to be provided by all suppliers, optional ones that are predefined but only provided as per the supplier's choice, and extensions made by the suppliers according to strict rules. Therefore, also compliant devices differ from supplier to supplier both in the functions that are not standardized by IEC 61850 and in the provision of optional and extended data. System integration tools must therefore not only integrate all information from the IEDs and define the data flow between them, but must also compensate for these differences. Thus, powerful tools using the strongly formal Substation Configuration description Language (SCL) as per IEC 61850 are an important issue for the system integrator. Tool development, or at least the use of powerful tools, is therefore a prerequisite for proper system integration. Owing to its excellent tools environment, ABB has no problem to seamlessly integrate compliant third party IEDs and build a homogeneous system. A second important category of tools are testing tools based on SCL files which accompany the project realization steps from system testing to the commissioning and site acceptance tests.

Standard solutions

In the session of the Study Committee B5 "Protection and Automation" at Cigré 2006 in Paris, the special reporter started a discussion with the question about standardized solutions. One contribution stated that "Generally, there are strong trends to standardize both switchgear and automation systems in substations." Faced with enormous pressures to reduce costs, utilities and suppliers may find that optimizing total life cycle cost through standardization efforts can make a major contribution.

Standardization, being rather a modularization of SA, starts with the definition of bay types and all related control, protection and monitoring functions. Such standardization or modularization activities can be observed on both suppliers' and utilities' sides. Pre-designed, pre-engineered and pre-tested bay and station level solutions comprising standard functionalities offer a tremendous potential. These speed up project execution and simplify operation and maintenance owing to harmonized training and documentation, resulting in drastically reduced total costs.

The ability of suppliers and users to co-operate early in such standardization activities plays a key-role in achieving the targeted result. IEC 61850, with its complete definition, is certainly an enabler for a common description of required functionality as shown in Figure 6.

Systems delivered

To be able to integrate and deliver IEC 61850 SA systems of any size and in any volume, a competitive SA system portfolio is needed with proper substation-proof and versatile components, powerful tools as well as proven and innovative applications. Further key factors are long experience in the SA domain, excellent system integration capabilities and a deep know-how regarding IEC 61850. The experience of ABB is based on hundreds of systems delivered world-wide. Big ones may have up to 30'000 data points or as many as 400 IEDs.

Since the situation varies from one substation to another, the capability to handle a multitude of new, retrofit and migration projects is essential for fulfilling the needs and specifications of customers and being successful on the market. The interoperable integration of a variety of third party equipment compliant with IEC 61850 is one of the main goals of the standard. Today such third party IED or subsystem integrations are often called for in SA systems and can be handled with ease by proficient system integrators.

In any case, the customer will not only get the ordered system as specified, but also one common SCD (Substation Configuration Description) file based on SCL according to IEC 61850. The SCD file describes the entire SA system as built, belongs to the system documentation and is the basis for any future maintenance, update and extension.

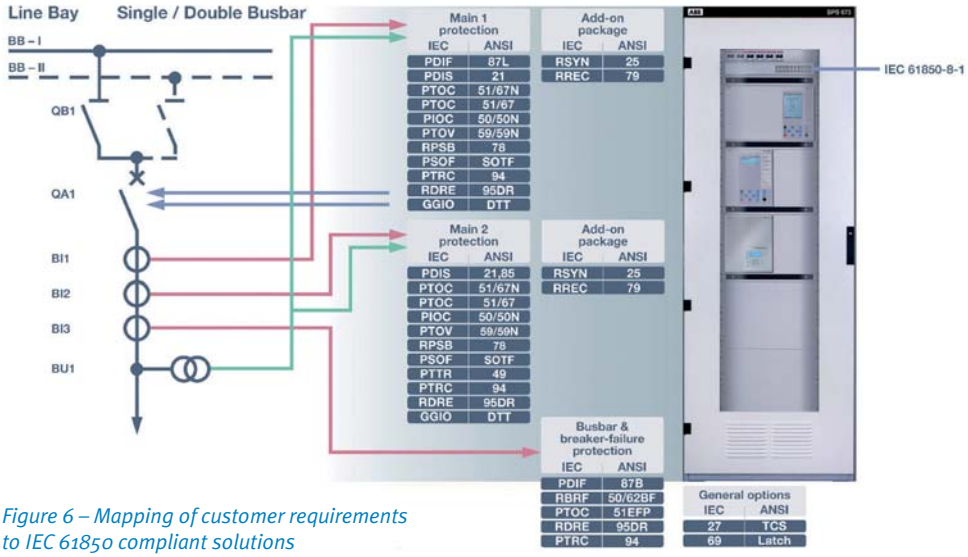

Figure 6 – Mapping of customer requirements to IEC 61850 compliant solutions

New projects:

It is of course most convenient to build a new system for a new

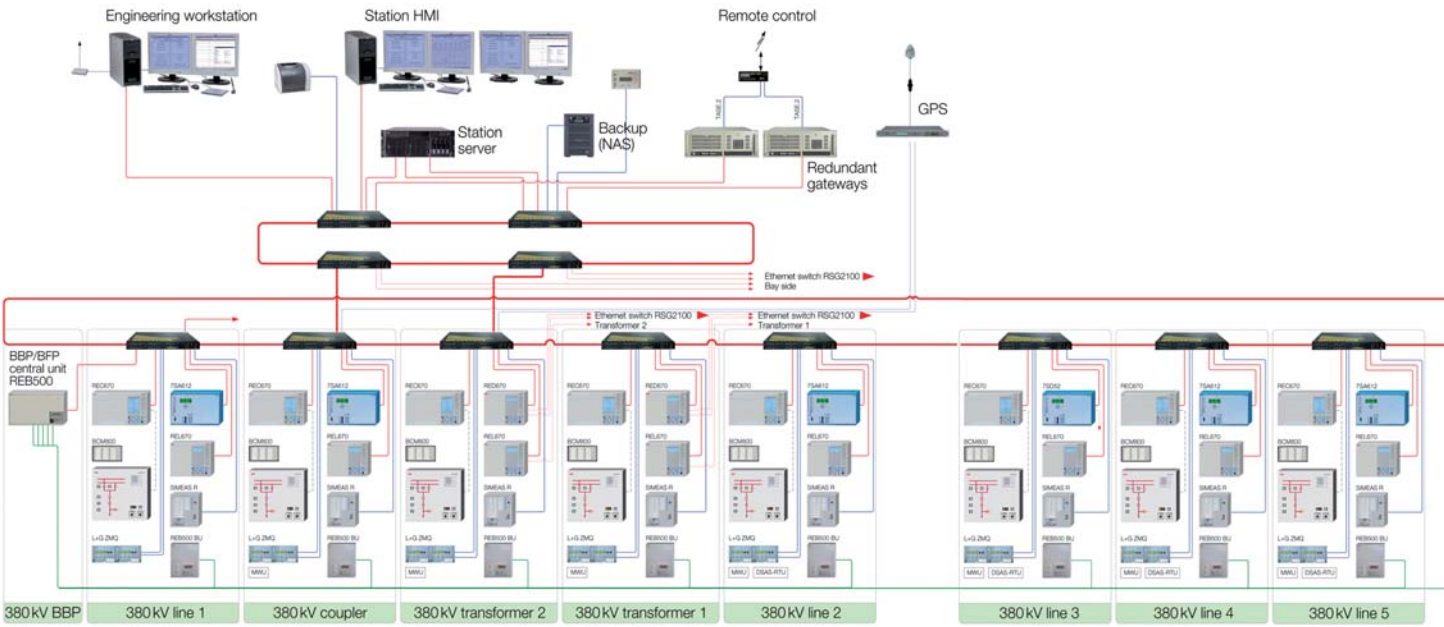

Figure 8 – The SA system of the substation Sils (Switzerland)

substation since in such a case the system may be designed without considering existing old equipment and be installed in a substation not yet in operation.

Retrofit:

Retrofit means that an existing conventional or numerical SA system is replaced by a new one. The switchgear will normally be kept, defining some boundary conditions. Maybe also some old SA equipment is retained and has to be considered. If the complete retrofit is done in one step with a substation out of operation, the retrofit is very similar to a new project. If the retrofit is done stepwise, we talk about migration.

Figure 7 – Retrofit work in the switchyard of Sils

Migration:

Migration is a retrofit where the old equipment – which might also include the switchgear – is replaced step-by-step. The main reason for such a procedure is to keep the substation in operation with the exception of the bay being retrofitted. For the SA system, this means the parallel operation of old and new equipment whereby a subsystem with IEC 61850 has to communicate with a legacy or hardwired one. Since for such a migration the boundary between the subsystems is moving with each retrofit step and the substation is in operation, migration is a big challenge both for the system integrator and the project manager. An example is given below (Substation Sils – see Figures 7 and 8).

Especially in developed countries with many stations being in their forties, fifties and even sixties, retrofit becomes increasingly important and also more economically viable owing to advances in technology such as hybrid switchgear and IEC 61850 substation automation and protection. ABB has comprehensive experience in performing retrofits and migrations in live substations with minimal interruptions.

Substation Sils

At present, ABB is realizing a challenging migration project for the Swiss utility KHR (Kraftwerke Hinterrhein AG). It covers the extension of the 380kV AIS substation Sils in the Domleschg region with double busbar. The station is an important node in the Swiss grid. Located next to the Sils power station, it distributes approx. 9'300 GWh of electrical energy annually, a multiple of KHR's own generation. It also links the interconnected grids of Switzerland, Italy and the other European countries.

Parts of the existing primary equipment are retained and combined with new parts such as circuit breakers from ABB (Figure 7). The secondary equipment is being replaced almost in its entirety and a new IEC 61850 substation automation system implemented. ABB's IEC 61850 compliant protection and control devices for the substation as well as the backup protection IEDs for the four generators and the transformer are fully integrated

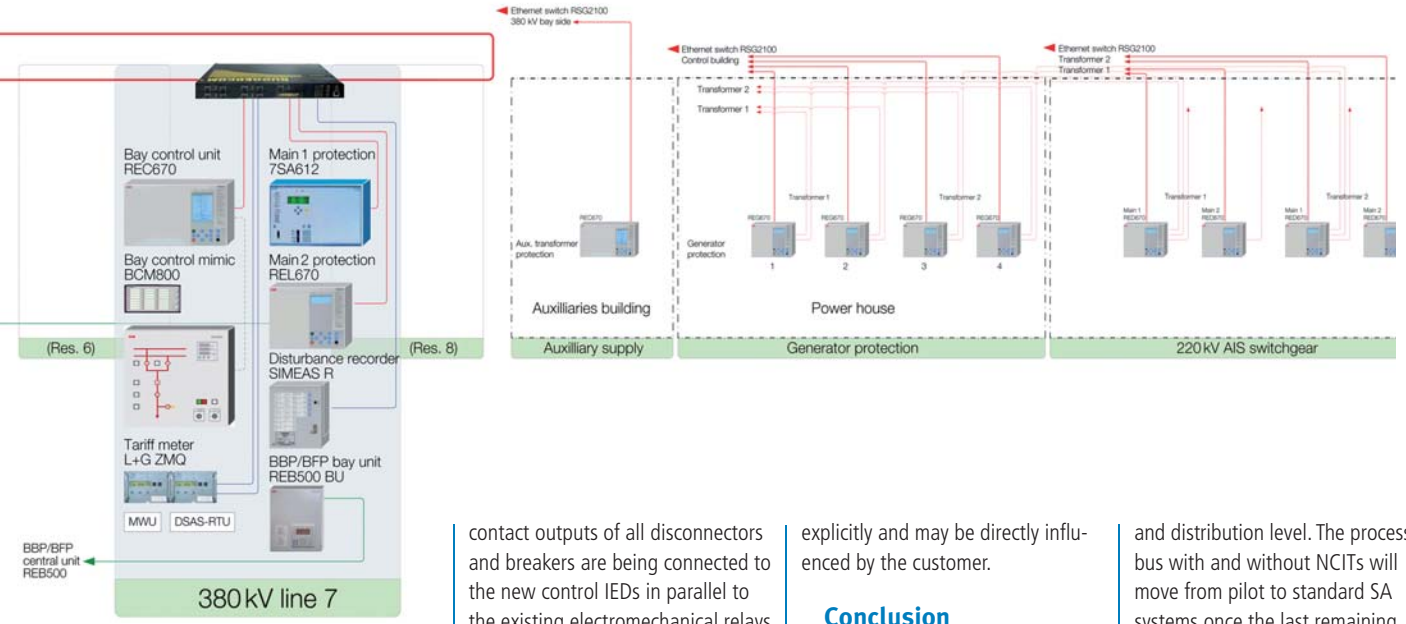

along with third party protection devices and only two retained ones that were upgraded to IEC 61850. Other equipment such as tariff meters and third party disturbance recorders were integrated via TCP/IP.

The migration is carried out with the existing station being in full operation. Preset shutdown windows lead to a tight time schedule with commissioning to be done field by field over ten months, from April 2008 to January 2009. In order to minimize risks and commissioning time spent on site, the SA system is completely tested in the factory and all panels installed on site, but only wired to the process as needed.

Critical issues during a stepwise retrofit are how to ensure proper performance of station-wide functions such as interlocking as well as busbar and breaker failure protection. For the busbar protection, the existing INX5 remains in full service until the final stage of the retrofit, whilst the new REB500 system with IEC 61850 communication is in mere signalling mode until then. For station-wide interlocking using GOOSE messages, the auxiliary contact outputs of all disconnectors and breakers are being connected to the new control IEDs in parallel to the existing electromechanical relays (Figure 8). The latter will be taken out of operation at the end of the migration.

Migration projects like Laufenburg (Switzerland) and Sils as reported here are very common in industrialized countries with refurbishment needs. The experience from such challenging migrations and retrofits is the solid background for all other projects and benefits them.

Know-how needed

Experience has clearly shown that the key for specifying and ordering, designing and integrating, commissioning and maintaining powerful IEC 61850 based substations is reasonable knowledge of the standard. This is not only valid for suppliers but also for customers. Therefore, ABB started early to provide customer training on different levels in the ABB University or on the customer's premises. The result is a mutual understanding to optimally exploit the benefits. An important aspect is also to learn what is fixed by the standard and should not be changed by any specification, as well as what has to be specified explicitly and may be directly influenced by the customer.

Conclusion

ABB both as product supplier and system integrator has products, applications, tools and broad experience to provide powerful IEC 61850 SA systems. This experience and comprehensive competence is also based on the large number of systems delivered to customers around the globe for new installations, retrofit and migration projects. As example for the many challenging projects, the SA system for the Sils 380kV substation was shown. This is one of many IEC 61850 retrofit and migration projects that followed the world's first multi-vendor IEC 61850 SA project, the 380kV substation Laufenburg, where ABB integrated new bay control and protection IEDs with an existing third party station level system. In this context, it is noteworthy that EGL has now entrusted ABB with the replacement of this third party system. This task will be accomplished by fully re-using the engineering data from the original SCD file.

In future, the great potential of GOOSE messages will be exploited by an ever increasing number of applications both at transmission and distribution level. The process bus with and without NCITs will move from pilot to standard SA systems once the last remaining issues are fully clarified by IEC TC38. ABB is working hard to issue a standardized concept for redundancy without limiting interoperability. Training on all levels of knowledge according to the customer needs is offered by its experts around the globe.

ABB's power system business embraces also the new application extensions of IEC 61850 like line protection and new domains such as control of hydro and other power plants. ABB has been committed to IEC 61850 from the very beginning and is now working on Edition 2 within the IEC TC57. This is a smooth, backward-compatible evolution of the standard. ABB will support Edition 2 when issued, will provide maintenance to customers using Edition 1 systems and show ways for possible upgrades.

Recommended reading for potential IEC 61850 users:

Cigré Report 326 "The introduction of IEC 61850 and its impact on protection and automation within substations" (produced by SC B5 WG B5.11) 2007 – www.cigre.org

Innovation, Experience and Competence at your service

ABB: The system integrator

Based on the vast experience in substation automation (SA) and expertise in IEC 61850, ABB has fully implemented the new standard in its portfolio of products, systems and tools. Through the combination with excellent system integration capabilities, ABB can offer optimized solutions for new installations, modernization and migration projects.

We design interoperable and open systems
with scalable architectures for any type, size and topology of substation to

- meet customer's availability and performance requirements
- accommodate user-specific operational philosophies
- enhance safety and efficiency of system operation
- lower life cycle cost in operation and maintenance
- support life cycle management and safeguard customer's investments

We offer

- Proficient project execution in every phase
- Future-proof solutions with all substation functions supported by IEC 61850, from the switchgear to the NCC gateway, and openness for further:
  - Extension, e.g. by size and functionality;
  - Optimization, e.g. usage of IEC 61850-compliant non-conventional instrument transformers;
  - Integration, e.g. with remote control centers for telecontrol or to power stations.
- Maximum level of product integration for enhanced performance and functionality of the systems based on excellent system integration capabilities as well as a complete IEC 61850-compliant portfolio
- Comprehensive, high-quality service and support for systems and products that is responsive and customer-oriented

ABB maximizes the benefits from IEC 61850 in substation automation, monitoring, control and protection for your new, retrofit and migration projects

ABB—We support your quest for excellence in the competitive power market

For more information please refer to the responsible ABB sales engineer for your country or to the address mentioned below.

ABB Switzerland Ltd
Power Systems
Brown Boveri Strasse 6
CH-5400 Baden/Switzerland

Phone +41 -58-585 77 44
Fax +41 -58-585 55 77
e.Mail substation.automation@ch.abb.com
www.abb.com/substationautomation