Auxiliary CT's for RADSS bus protection

The RADSS bus differential protection uses auxiliary CT's for the following reasons:

- Ratio correction, so that the overall turns ratio (n_o) becomes the same for all CT circuits.
- To bring down the main CT secondary current from 5 A to 1 A, or in some special cases from 5 A to 2 A.
- The auxiliary CT's also limit the maximum transient voltage imposed on the RADSS relay. This is achieved by keeping the secondary knee-point voltage less than about 500 V r.m.s.

AUXILIARY CT TYPE SLCE 16 AND SLXE 4

The auxiliary CT's types SLCE 16 and SLXE 4 are available. The auxiliary CT's have strip mounted cores made up of high quality sheet steel with C-shaped stampings. The SLCE 16 and SLXE 4 is normally provided with screw terminal 2 for maximum 10 mm^2 wires (see Fig. 3 and Fig. 4 for dimensions).

Table 1. Typical ratios

Type	Current ratio	Turns ratio	Cu-loss at 20°C and rated current
SLCE 16	5/1	160/800	20 W
	5/0.5	80/800	5 W
	1/1	800/800	20 W
	1/0.1	80/800	0.2 W
SLXE 4	5/2	240/600	25 W
	2/2	600/600	25 W
	1/2	1200/600	25 W

The knee-point voltages for the SLCE 16 resp. SLXE 4 are about 450 resp. 400 V r.m.s. It should be noted that the number of secondary turns is kept constant for both types, 800 resp. 600 turns. Different CT turns ratios are therefore obtained by varying the number of primary turns.

The volts/turn at an induction of about 1.6 Tesla is 0.52 V/t for SLCE 16 and 0.66 V/t for SLXE 4.

6917 0800-AA (9543) 82-08

MULTI-RATIO AUXILIARY CT'S

For a particular bus installation, with several different main CT ratios, it is an advantage to use only one type of auxiliary CT with the required number of taps. The SLCE 16 may be provided with seven terminal taps for the primary winding and two terminals for the secondary winding.

As an example consider a bus installation with the following line CT and aux. CT ratios:

Table 2

Line CT	$\frac{2000}{5}$	$\frac{1600}{5}$	$\frac{1200}{5}$	$\frac{1000}{5}$	$\frac{800}{5}$	$\frac{400}{5}$
Aux. CT	$\frac{5}{1}$	$\frac{5}{0.8}$	$\frac{5}{0.6}$	$\frac{5}{0.5}$	$\frac{5}{0.4}$	$\frac{5}{0.2}$
Aux. turns	$\frac{160}{800}$	$\frac{128}{800}$	$\frac{96}{800}$	$\frac{80}{800}$	$\frac{64}{800}$	$\frac{32}{800}$

The overall ratio is in this example $n_o = 2000$.

One multi-ratio auxiliary CT with the above data may be ordered as follows:

Type SLCE 16, aux. CT with

Current ratio: 5/0.2 - 0.4 - 0.5 - 0.6 - 0.8 - 1 A

Primary terminals/turns:
P1 - P2 - P3 - P4 - P5 - P6 - P7
0 - 32 - 64 - 80 - 96 - 128 - 160

Secondary terminals/turns:

S1 - S2 / 0 - 800 t to be used with RADSS

It should be noted that if more ratios are required these can be obtained by using intermediate terminals, e.g. by using the primary connections P3 - P4 = 16 t and P4 - P6 = 48 t, the ratios 5/0.1 and 5/0.3 A can also be obtained.

AUTO-CONNECTED AUX. CT FOR 2 A SECONDARY RATING

The SLCE 16 may be used for the ratio 5/2 A provided it is permitted to use the auto-connection principle.

This is normally the case if dedicated main CT's are used. On the other hand, if the RADSS plus some other relays are connected to same main CT core, certain wiring and polarity problems may arise. The SLXE 4 must then be used with separately insulated primary and secondary windings.

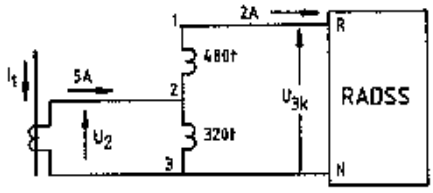

SLCE 16
5/2 A
Autoconnected with terminals/turns:
1 - 2 - 3 / 0 - 480 - 800 t

Fig. 1 Possible arrangement of SLCE 16

The knee-point voltage $U_{3k} \approx 450$ V across terminals 1 - 3.

STOCKED MULTI-WINDING AUX. CT

A special reconnectable SLCE 16, suitable for being used with the RADSS protection, will be made available from a small stock at the R-division. Two different ratings will be provided, i.e. with 1 A or 5 A rated primary windings. The secondary winding will always be made with a maximum rating of 1 A.

The two different designs are denoted:

- Multi-winding SLCE 16
  Ratio 1/0.025 - 1 A
  Ordering No. 4785 040-BCV

- Multi-winding SLCE 16
  Ratio 5/0.025 - 1 A
  Ordering No. 4785 040-BCZ

In both designs the secondary current can be altered in steps of 25 mA up to 1 A. The primary current is always considered to be fixed, i.e. equal to the rated current of 1 A or 5 A.

As indicated in Fig. 2 there are four primary windings with the relative number of turns: 1 k, 3 k, 9 k and 27 k, where k is a constant. The secondary winding has a fixed number of 800 turns, which provides the typical knee-point voltage of about $U_k = 450$ V r.m.s.

The total relative number of turns in all the primary windings is:
1 k + 3 k + 9 k + 27 k = 40 k.

Hence, in the case of a 1/1 A ratio it follows that:
40 k = 800 t, i.e. k = 20.

Similarly, in the case of a 5/1 A ratio:
40 k = 160 t, i.e. k = 4.

0317 0500-AA (8543) 82-08

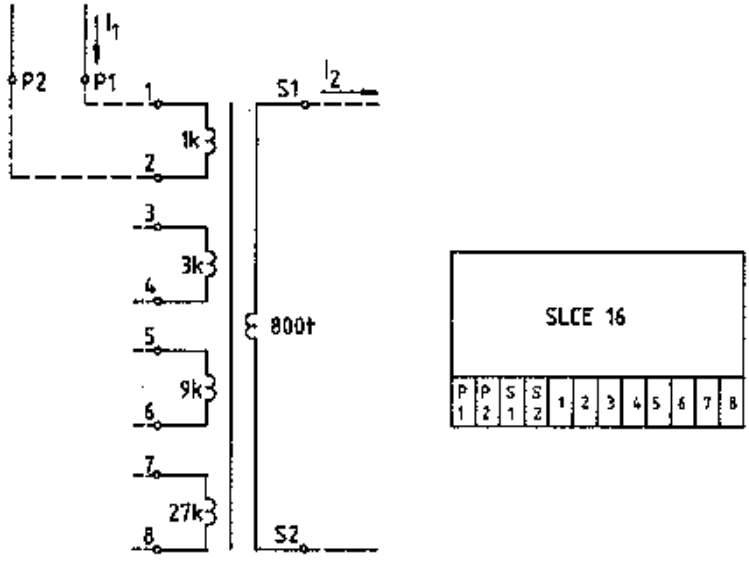

Fig. 2 Multi-winding SLCE 16

From Table 3 it is seen that any relative number of primary turns between k = 1 and k = 40 can be obtained by adding or subtracting the turns in the various windings.

The percentage value between each relative number of turn is

$$\frac{1\ k}{40\ k} \times 100\ \% = 2.5\ \%$$

which corresponds to steps of 25 mA when reflected to the output current of the 1 A rated secondary winding.

The connections shown in Table 3 are valid for both the 1 A- and 5 A-designs, i.e. the ratio 1/0.025 A and 5/0.025 A will be obtained by using the connections for k = 1, i.e. P1 - 1, 2 - P2.

The corresponding actual primary number of turns is 20 t for the 1 A-rating and 4 t for the 5 A-rating. The secondary current I_2 therefore becomes (for k = 1):

$$I_2 = \frac{1\ A \times 20\ t}{800\ t} = 0.025\ A \text{ for the 1 A-rating}$$

$$I_2 = \frac{5\ A \times 4\ t}{800\ t} = 0.025\ A \text{ for the 5 A-rating}$$

Similarly, for all the other k-values, between 2 and 40, the secondary current can be increased in steps of 25 mA up to 1000 mA by using the shown primary connections. The secondary winding is always connected to S1 - S2.

Example

a) Required ratio: 1/0.375 A

Use: SLCE 16, 1/0.025 - 1 A
Reference k-value = 20
Connect: P1 - 4, 3 - 6, 5 - 7, 8 - P2
Ordering No. 4785 040-BCV

b) Required ratio: 5/0.375 A

Use: SLCE 16, 5/0.025 - 1 A
Reference k-value = 4
Connect: P1 - 4, 3 - 6, 5 - 7, 8 - P2
Ordering No. 4785 040-BCZ

It should be remembered that the RADSS protection cannot tolerate too high aux. CT ratios. In practice the ratios 1/0.05 A = 20 and 5/0.125 A = 40 must be regarded as typical maximum values.

REQUIRED AUX. CT SECONDARY SATURATION VOLTAGE

The aux. CT's must be capable of producing a certain secondary voltage in order to ensure that the RADSS relay will operate in the case of an internal bus fault. The secondary knee-point voltage should be at least 1.3 times the RADSS relay operating voltage.

If the operating voltage is about 300 V the aux. CT saturation voltage should be at least 390 V. This is sufficient because in the case of heavy internal bus faults the maximum aux. CT transient voltage can reach 2000 V and since the RADSS relay works within 1 ms decisive operation will still be obtained.

As previously mentioned the aux. CT saturation voltage should not exceed 500 V r.m.s., in order to limit the maximum transient voltage imposed on the RADSS relay.

For the RADSS relay the auxiliary current transformer secondary turns are fixed for SLCE 16 to 800 t and for SLXE 4 to 600 t.

Ordering table: SLCE 16, standard versions with 800t secondary

Fixed ratio	5/1 A	**4785 040-AYZ**
	1/1 A	**4785 040-AZF**
	1/0.5 A	**4785 040-ANV**
Multi ratio	5/0.5-1 A	**4785 040-AXP**
	1/0.125-0.25-0.5-1 A	**4785 040-ANX**
	1/0.2-0.4-0.5-1 A	**4785 040-ANY**
	1/0.3-0.5-0.6-1 A	**4785 040-ARF**

8917 0500-AA (9543) 82-08

DIMENSIONS

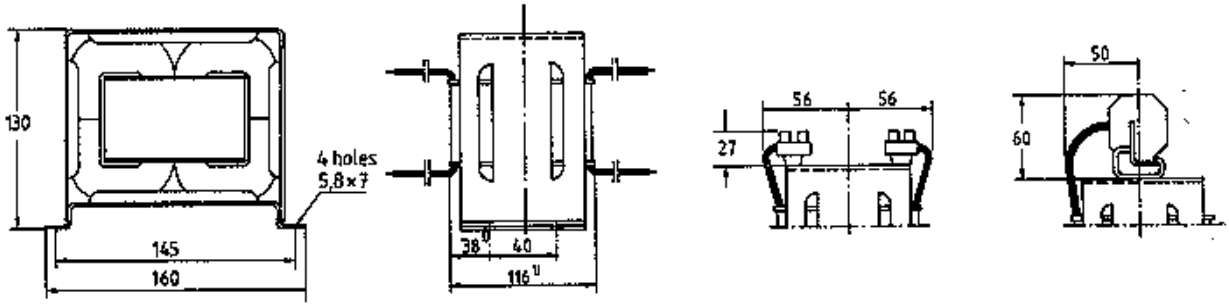

Fig. 3 Type SLCE 16 (Mass: 5 kg)

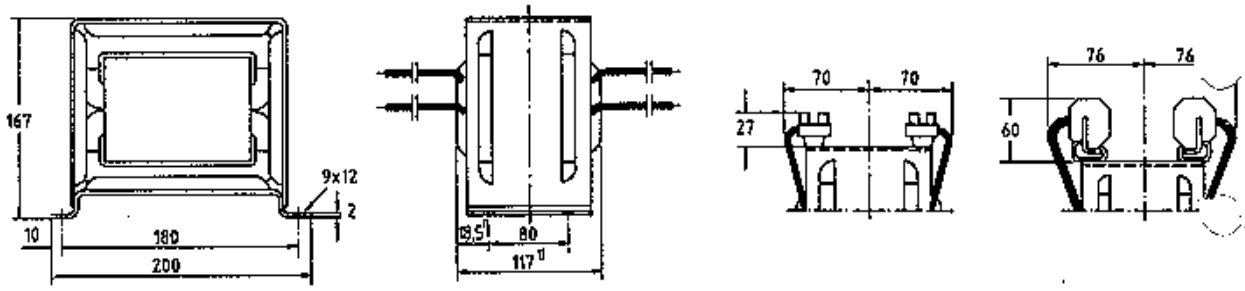

Fig. 4 Type SLXE 4 (Mass: 8 kg)

ASEA

Description (English): Multiwinding SLCE 16

Description (own language):

Table 3

Sheet 1 Cont. 2

RK 637-302E Ed.2

Accepted by Qual. Control | Accepted for production by | Design checked by: S.Forsman | Drawing checked by | Drawn by

Reference k-value	I_2 (mA)	P1 1 1k 2 3 3k 4 5 9k 6 7 27k 8 P2	Primary connections
1=1	25		P1-1 2-P2
2=-1+3	50		P1-2, 1-3 4-P2
3=3	75		P1-3 4-P2
4=1+3	100		P1-1, 2-3 4-P2
5=-1-3+9	125		P1-2, 1-4, 3-5 6-P2
6=-3+9	150		P1-4, 3-5 6-P2
7=+1-3+9	175		P1-1, 2-4, 3-5 6-P2
8=-1+9	200		P1-2, 1-5 6-P2
9=9	225		P1-5 6-P2
10= 1+9	250		P1-1, 2-5 6-P2
11=-1+3+9	275		P1-2, 1-3, 4-5 6-P2
12=3+9	300		P1-3, 4-5 6-P2
13=1+3+9	325		P1-1, 2-3, 4-5 6-P2
14=-1-3-9+27	350		P1-2, 1-4, 3-6 5-7, 8-P2
15=-3-9+27	375		P1-4, 3-6 5-7, 8-P2

This document must not be copied without our written permission, and the contents thereof must not be imparted to a third party nor be used for any unauthorized purpose. Contravention will be prosecuted. ASEA

No. | Revision | Appd | Date | Year Wk

ASEA

Description (English): Multiwinding SLCE 16

Description (own language):

Table 3

Sheet 2 Cont 3

RK 637-302E Ed.2

Accepted by Quality Control | Accepted for production by | Design checked by: S.Forsman | Drawing checked by | Drawn by

Reference k-value	I_2 (mA)	P1 1 1k 2 3 3k 4 5 9k 6 7 27k 8 P2	Primary connections
16=+1-3-9+27	400		P1-1, 2-4, 3-6 5-7, 8-P2
17=-1-9+27	425		P1-2, 1-6 5-7, 8-P2
18=-9+27	450		P1-6, 5-7 8-P2
19=+1-9+27	475		P1-1, 2-6 5-7, 8-P2
20=-1+3-9+27	500		P1-2, 1-3, 4-6 5-7, 8-P2
21=+3-9+27	525		P1-3, 4-6 5-7, 8-P2
22=+1+3-9+27	550		P1-1, 2-3, 4-6 5-7, 8-P2
23=-1-3+27	575		P1-2, 1-4, 3-7 8-P2
24=-3+27	600		P1-4, 3-7 8-P2
25=+1-3+27	625		P1-1, 2-4, 3-7 8-P2
26=-1+27	650		P1-2, 1-7 8-P2
27=27	675		P1-7 8-P2
28=+1+27	700		P1-1, 2-7 8-P2
29=-1+3+27	725		P1-2, 1-3, 4-7 8-P2
30=+3+27	750		P1-3, 4-7 8-P2

No	Revision	Appd.	Date	Year	Wk

This document must not be copied without our written permission, and the contents thereof must not be imparted to a third party nor be used for any unauthorized purpose. Contravention will be prosecuted. ASEA

ASEA

Description (English): Multiwinding SLCE 16

Description (own language):

Table 3

Sheet 3

Cont.

RK 637-302E Ed.2

Iss. by dept. | Year | Week

Accepted by Quality Control | Accepted for production by | Design checked by S.Forsman | Drawing checked by | Drawn by

Reference k-value	I_2 (mA)	P1 1 1k 2 3 3k 4 5 9k 6 7 27k 8 P2	Primary connections
31=1+3+27	775		P1-1, 2-3, 4-7 8-P2
32=-1-3+9+27	800		P1-2, 1-4, 3-5 6-7, 8-P2
33=-3+9+27	825		P1-4, 3-5, 6-7 8-P2
34=1-3+9+27	850		P1-1, 2-4, 3-5 6-7, 8-P2
35=-1+9+27	875		P1-2, 1-5, 6-7 8-P2
36= 9+27	900		P1-5, 6-7 8-P2
37=1+9+27	925		P1-1, 2-5 6-7, 8-P2
38=-1+3+9+27	950		P1-2, 1-3, 4-5 6-7, 8-P2
39=3+9+27	975		P1-3, 4-5, 6-7 8-P2
40=1+3+9+27	1000		P1-1, 2-3, 4-5 6-7, 8-P2

Design checked by | Rev. | Dept. | Year | Wk | Cont.

Our written permission, and the contents thereof must not be imparted to a third party nor be used for any unauthorized purpose. Contravention will be prosecuted. ASEA

No. | Revision | Appd | Dept | Year | Wk