We reserve all rights in this document and in the information contained therein. Reproduction, use or disclosure to third parties without express authority is strictly forbidden.
© Copyright ABB.

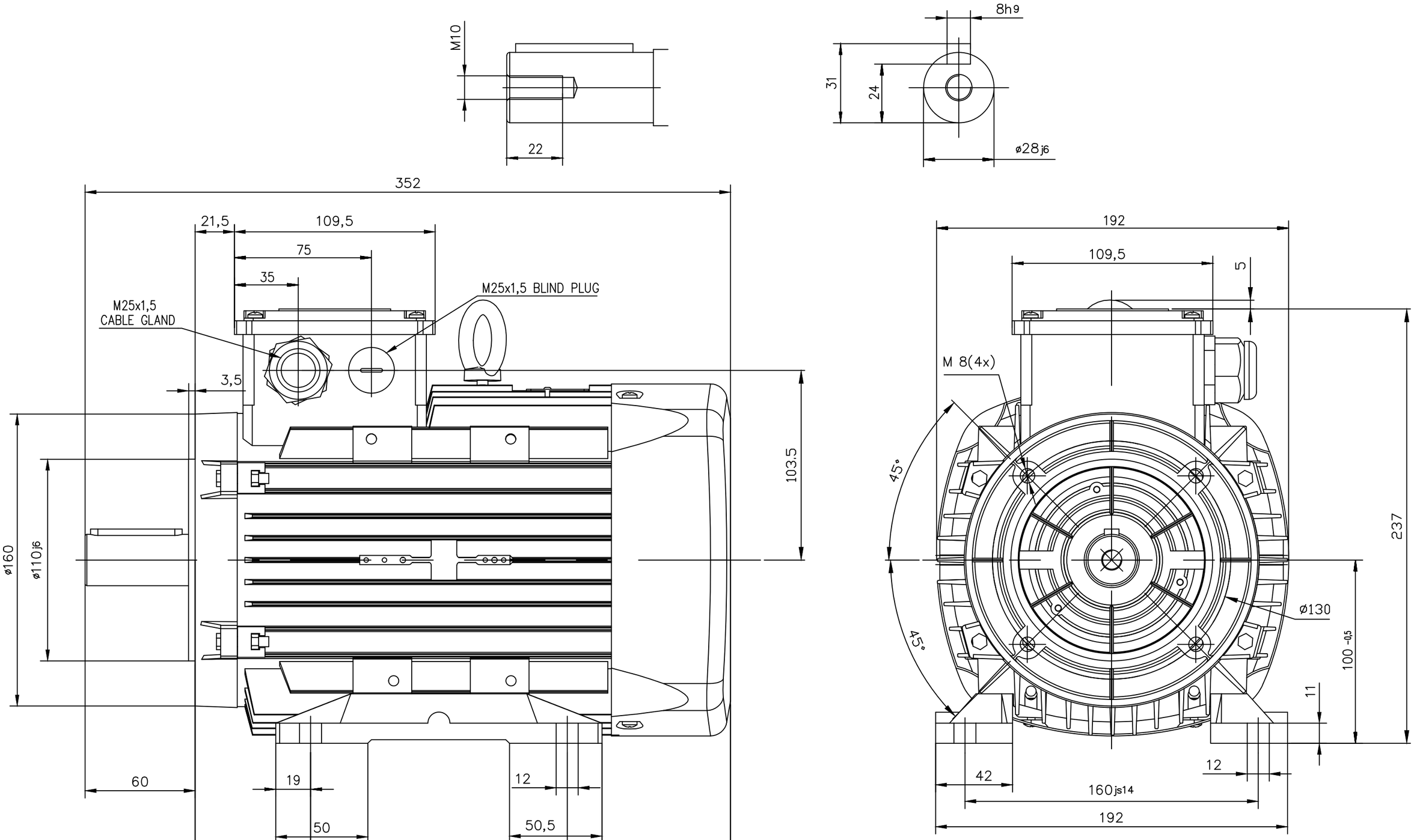

Prepared 2015-06-25 M. FRÖLING	Separate part list ☐ with separate No. ☐	Title Motor Dimension Print	Scale
Reviewed	Responsible Department DMMG/LMATM		
Approved 2015-06-25 J. TAAVO	Original Dwg		Language EN
Distribution / Functional Code	Order No. / Weight	Type M1AA 100 / Mounting IM2101	Size A3
ABB Motors and Generators		Document No. 3GZW500610-10 / Revision A	Sheet 1/1

ABBA3BFI

AutoCAD