July, 1991
Supersedes DB 41-348, pages 1-4, dated October, 1970
Mailed to: E, D, C/41-300B

For Differential Protection of Ac Generators, Motors, and Shunt Reactors
Device Number: 87G

Type SA-1 Solid State Generator Relay

Application

The Westinghouse SA-1 relay is a solid state, three-phase, high-speed type used for differential protection of ac generators, motors, and shunt reactors.

When equal currents flow into and out of the protected apparatus, differential current does not flow into the operating circuit of the relay unless it is "error" current due to unequal current transformer performance. However, the relay has a variable percentage operating characteristic, and requires a larger amount of operating current at higher values of restraint, or through current, than during light internal faults, thus accommodating increased amounts of current transformer error during heavy external faults.

The variable percentage characteristic of the relay provides high sensitivity during light internal faults, and avoids incorrect relay operation during heavy external faults.

Minimum pickup of the SA-1 relay is .14 amperes. As indicated in figures 2 and 5, it operates at 5% unbalance (.25 amperes) with 5 amperes of restraint current. At 60 amperes of restraint current, 50% unbalance or 30 amperes of differential current is required to initiate operation.

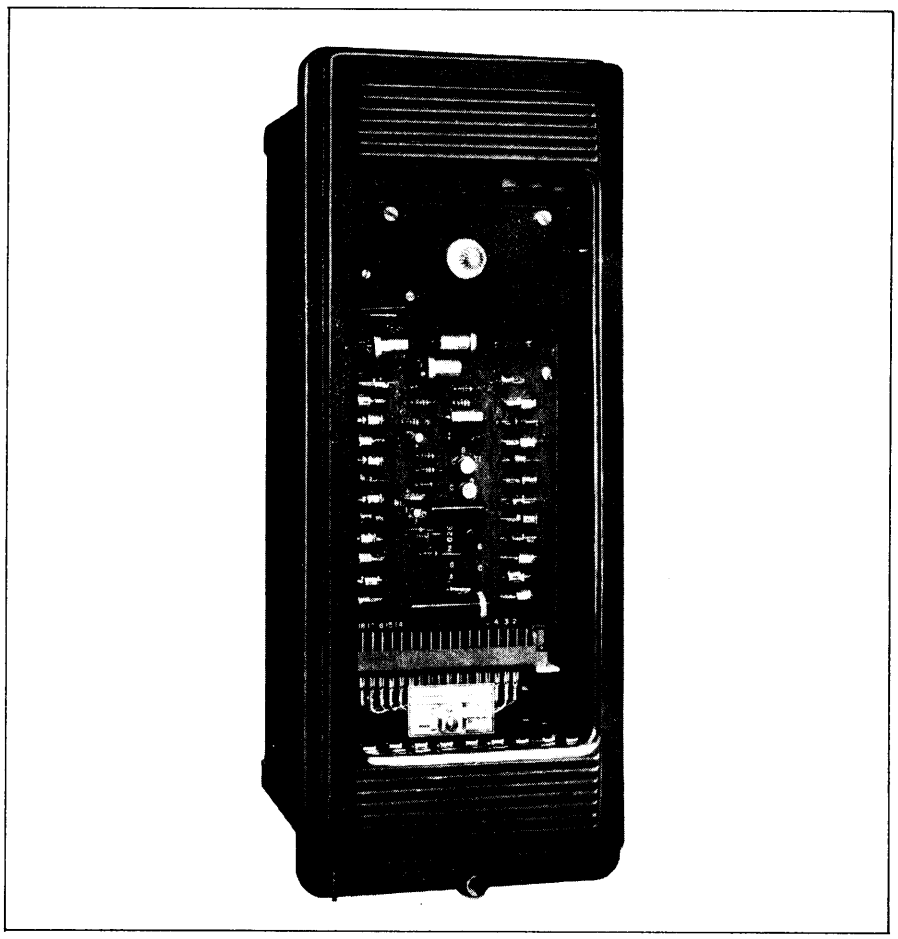

Features

Solid State Design: This relay has all solid state components mounted on a plug-in printed circuit board which is accessible from the front of the relay.

Utilizes Time Proven Components and Circuits: A successful field installation for over 2 years following 2 years of extensive laboratory and field tests insures the reliability of this design.

High Speed Tripping: Operating time of 1½ cycles over a wide range of trip conditions provides secure, rapid trip initiation for internal faults.

Variable Percentage Characteristic: The proportional increase in the current required to operate the relay is greater than that of the fault current. This protects against incorrect operation due to unequal current transformer performance during heavy external faults while providing sensitive protection during light internal faults.

Simple to Apply: No settings are required when placing the SA-1 in service.

Compact Design: One polyphase relay mounted in an FT-32 case provides complete differential protection for ac generators, motors and shunt reactors. The FT case matches other protective relays used to protect the machines.

Self Protected from Surges: Built in surge protection guards against surges on the external ac and dc circuits.

Indicating Lamp: An indicating light, turned on when the relay operates, remains lit until its circuit is interrupted by a microswitch. The microswitch is reset by a lever which is accessible without removing the relay cover.

Current Transformer Selection

Current transformer ohmic burden should not exceed $\frac{N_p V_{CL}}{133}$ and the burden factor (BF) should not have a ratio greater than the two current transformers on the same primary phase.

Legend:

N_p = proportion of total number of current transformer turns being used

V_{CL} = current transformer, 10L voltage accuracy class

$$BF = \frac{1000 R_B}{N_p V_{CL}}$$

R_B = burden resistance, excluding current transformer winding resistance

Example:
Assume a 10L200, 600/5 multi-ratio current transformer is being used on the 400/5 tap

$$N_p = \frac{400}{600} = 0.67$$

$$V_{CL} = 200$$

Burden on the current transformer should not exceed:

$$\frac{N_p V_{CL}}{133} = \frac{(0.67)\ 200}{133} = 1.0 \text{ ohm}$$

Assuming a burden resistance (R_B) of 0.5 ohms, the burden factor (B_F) is:

$$BF = \frac{1000\ R_B}{N_p V_{CL}} = \frac{(1000)\ 0.5}{(0.67)\ 200} = 3.8$$

Then, the other set of current transformers may have a burden factor (BF) as great as 2 x 3.8=7.6, or as low as ½ or 3.8=1.9. If the other set of current transformers also has a burden of 0.5 ohms, a 10L100, 10L200, C-100, C200 or C400 rating would be satisfactory, since the burden factors are 7.6, 3.8, and 1.9 respectively.

When calculating the burden, use the one-way lead burden.

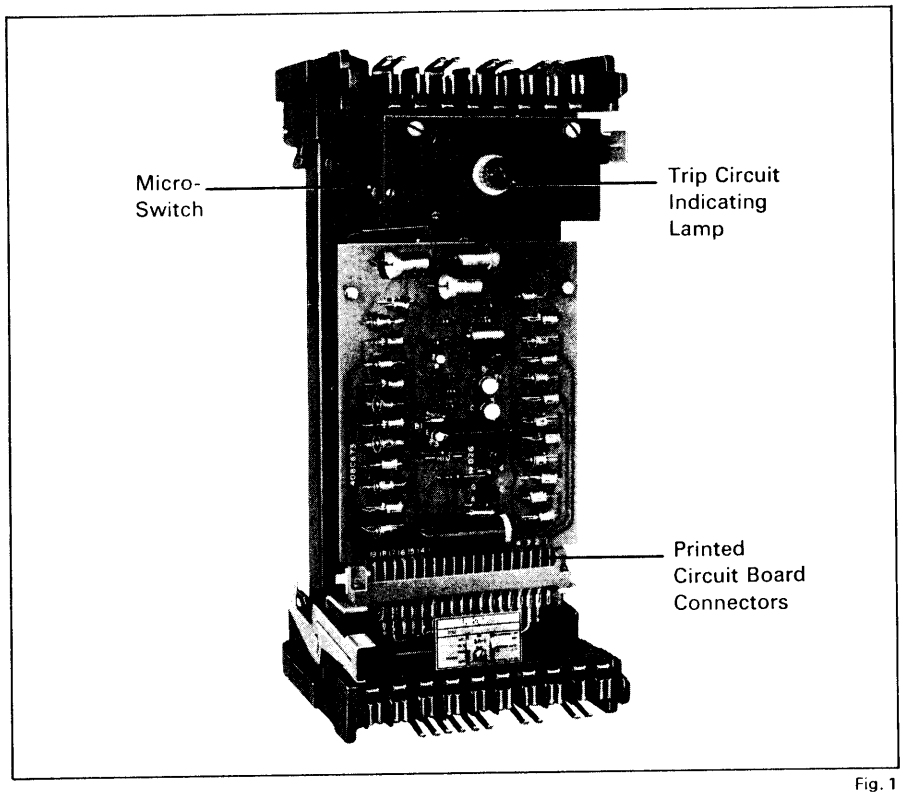

Fig. 1

Construction

The SA-1 relay consists of a restraint circuit, an operating circuit, filter and sensing circuit, amplifier circuit, and a trip and indicating circuit.

Restraint Circuit

The restraint circuit of each phase consists of a transformer with tapped primary winding, a resistor, and a full wave rectifier bridge. Outputs of the rectifiers on all three phases are connected in parallel, to provide a maximum voltage network. Thus the voltage applied to the filter and sensing circuit is proportional to the phase current of greatest magnitude.

Operating Circuit

The operating circuit of each phase consists of a transformer, resistor, and full-wave rectifier bridge. Output of the rectifier on all three phases is connected in parallel to provide a maximum voltage network. The voltage applied to the filter and sensing circuit is proportional to the phase current of the greatest magnitude.

Filter and Sensing Circuit

Consists of resistors and capacitors as shown in figure 6. The output of this circuit appears across resistor R_3, and is applied to the amplifier circuit.

Characteristic Curves

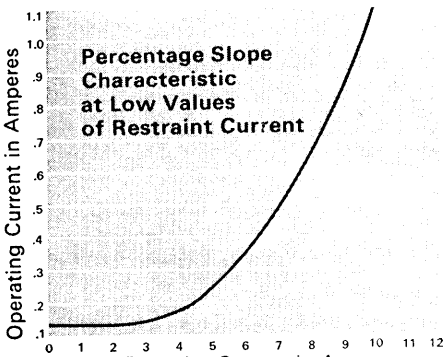

Fig. 2 471103

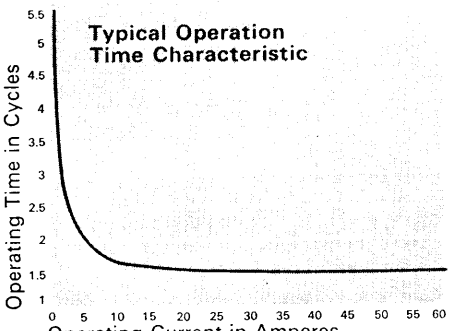

Fig. 3 471106

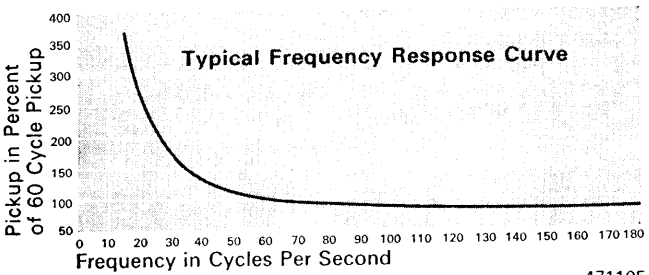

Fig. 4 471105

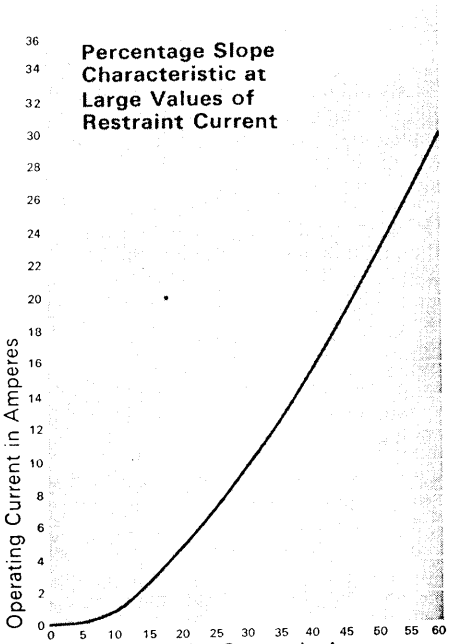

Fig. 5 471104

Amplifier Circuit

Consists of a two-transistor amplifier, T_1 and T_2 (figure 6), which controls the operation of the relaxation oscillator.

The sensing circuit is connected to the amplifier circuit so that it receives the difference in voltage between the restraint and operating filter circuits. Consequently, the polarity input voltage to the amplifier depends upon the relative magnitude of the voltages across the operating and restraint filters. To trigger the amplifier, the voltage of the operating filter must be greater than the output voltage of the restraint filter.

Trip Circuit

The trip circuit is a thyristor (SCR-1 in figure 6) which consists of an anode, cathode, and gate.

The anode is connected to the positive side of the dc supply, and the cathode is connected to the negative side of the dc supply, through the breaker trip coil. The gate of the thyristor is connected to the output of the amplifier circuit through a pulse transformer. When gate current does not flow, the thyristor acts as an open circuit to the breaker trip coil circuit.

The presence of gate current in the thyristor connects the breaker trip coil to the dc supply.

Indicating Circuit

Consists of a lamp which is connected across the dc supply through a silicon controlled rectifier and resistor. When the amplifier circuit is triggered due to secondary fault current being applied to the relay, the lamp is energized and remains lighted until its circuit is interrupted by operation of the micro-type reset switch.

Operation

(See Figure 7)

During external faults, current flows through the primary winding of the restraint transformers and induces a secondary voltage which appears on the restraint side of the sensing circuit. If the two sets of primary currents do not have equal performance, then the difference or error current will flow out of the midtap of the restraint transformer, through the primary of the operating transformer to induce a secondary voltage which appears on the operating side of the sensing circuit.

However, with proper selection of current transformers, sufficient restraint voltage will exist to prevent triggering of the amplifier.

Internal Wiring (Front View), FT-32 Case

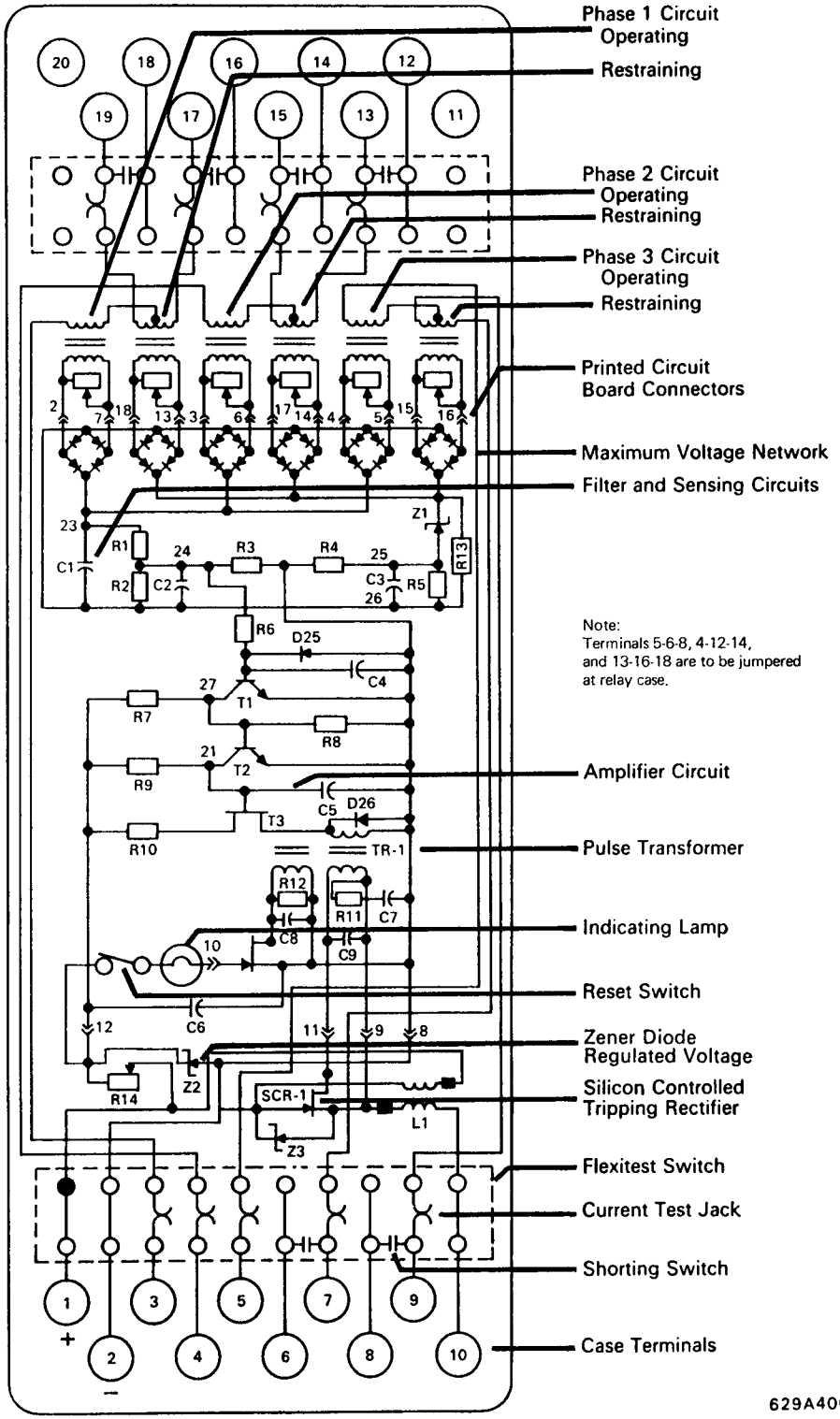

Characteristics

Percentage Slope Curves

(See Figures 2 and 5)

Due to the variable percentage slope characteristic of the relay, high sensitivity is provided for light internal faults, and low sensitivity exists during heavy external faults, when current transformer performance may cause flow of a false differential current.

At 5 amperes restraint current, the relay operates at .25 ampere, or 5% unbalance. With 60 amperes restraint current, the relay requires 30 amperes to operate, or 50% unbalance. Thus, with 60 amperes through fault current flowing, the output of the main current transformers may vary considerably without causing incorrect relay operation.

Minimum Pickup

.14 ampere.

Operating Time

See figure 3.

Frequency Response

See figure 4.

Burden and Thermal Ratings

Each Restraint Circuit

Burden is 0.25 volt-amperes at 5 amperes.

Continuous rating is 20 amperes.

One-second rating is 300 amperes.

Operating Circuit

Burden of the operating circuit on each current transformer is variable because of the saturating transformer.

Burden is 0.37 volt-amperes at 0.5 amperes, and 170 volt-amperes at 60 amperes.

Continuous rating is 10 amperes.

One-second rating is 200 amperes.

Amplifier Circuit

Dc burden on station battery is:

Volts	Milliamperes	Watts
48 dc	60	2.9
125 dc	55	6.9

Settings

No settings are required, since neither the operating nor restraint transformers have taps.

Shipping Weights and Carton Dimensions

Relay Type	Flexitest® Case Type	Weight, Lbs: Approx. Net	Weight, Lbs: Approx. Shipping	Domestic Shipping Carton Dimensions: Inches
SA-1	FT-32	15	19	13 x 13 x 21

Further Information

List Prices: PL 41-020
Technical Data: TD 41-025
Instructions: IL 41-348.1
Case Dimensions: DB 41-076
Other Protective Relays:
Application Selector Guide, TD 41-016

External Wiring

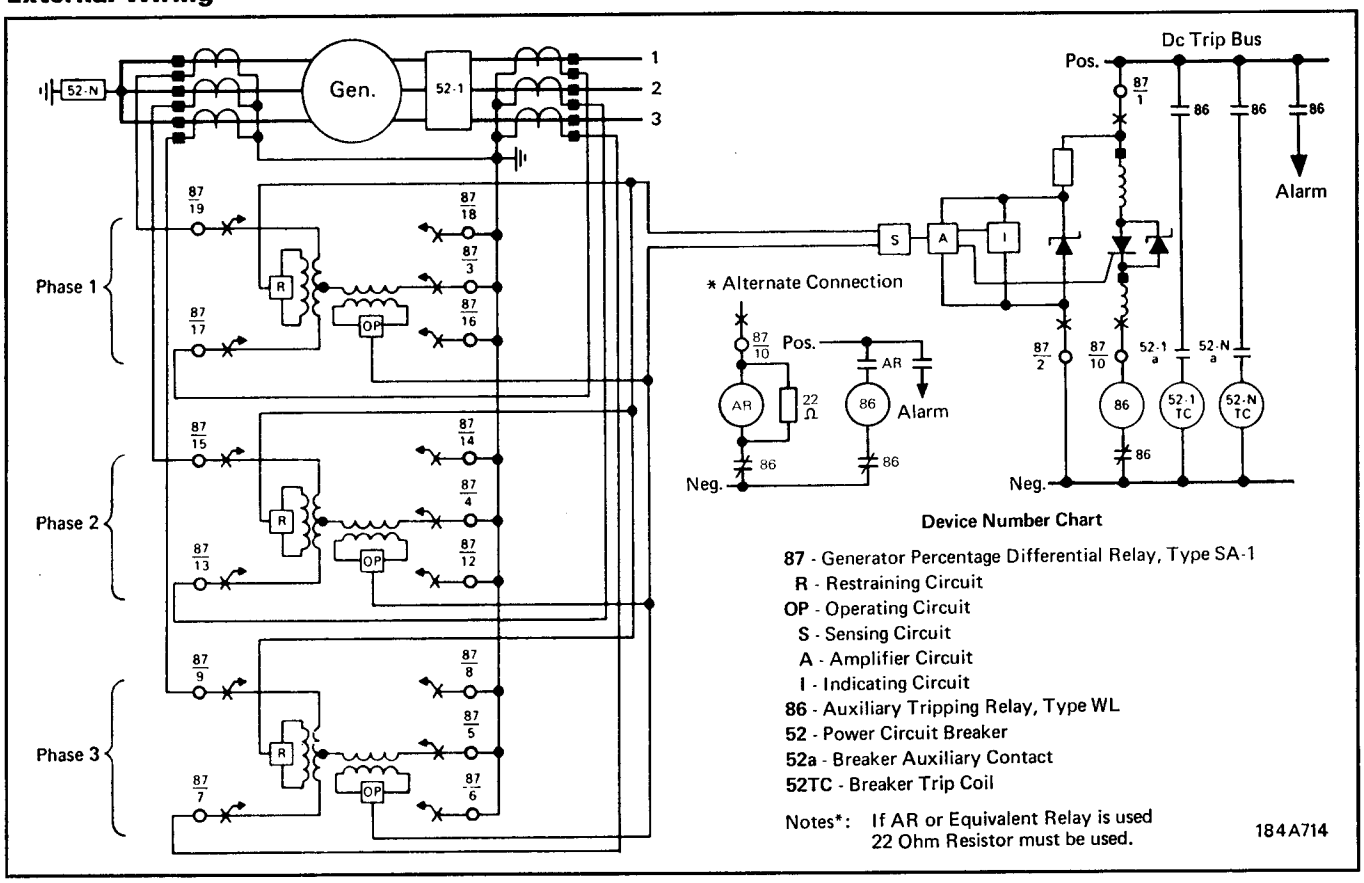

July, 1991
Supersedes TD 41-020, Type SA-1 on page 68, dated November, 1987
Mailed to: E, D, C/41-300B

For Differential Protection of Ac Generators, Motors, and Shunt Reactors

Type SA-1 Solid State Generator Relay

Solid State High Speed Differential, Three Phase (Device Number: 87G)

Type	Application	Dc Rating	Output	Frequency, Hertz	Indicator	Sensitivity Minimum Trip, Ac	Relay Data: Internal Schematic	Relay Data: Style Number②	Relay Data: Case Size
SA-1①	Generator	48/125 Volts	Single	60	1 Amp	.14 Amp	629A406	290B225A10Ⓢ	**FT-32**
		250 Volts					876A613	290B225A14	
		48/125 Volts				.5 Amp	877A847	290B225A13	
		250 Volts				.5 Amp	3492A04	290B225A16	

Ⓢ Denotes item available from stock.
① 50-Hertz relays and auxiliaries can be supplied at same price. Order "Similar to Style Number ....., except 50-Hertz".
② Style includes external reactor assembly 205C676G01.